MIL-F-3747E
2 May 1984
SUPERSEDING
MIL-F-3747D
29 March 1977

MILITARY SPECIFICATION

FLASHLIGHTS: PLASTIC CASE, TUBULAR (REGULAR, EXPLOSION-PROOF, EXPLOSION-PROOF HEAT RESISTANT, TRAFFIC DIRECTING, AND INSPECTION-LIGHT)

This specification is approved for use by all Departments and Agencies of the Department of Defense.

1. SCOPE

1.1 Scope. This specification covers regular, explosion-proof, explosion-proof heat-resistant, traffic-directing, and inspection-light flashlights using battery BA-30 (commercial D size dry cell). This specification also covers lenses for spot and diffused light, and blackout, amber, green and red filters (see 6.2).

1.2 Classification.

1.2.1 Types and styles. Flashlights covered by this specification shall be of the following types and styles as specified (see 6.2):

Type I - Regular standard.
Type II - Explosion-proof.
Type III - Explosion-proof, heat-resistant.
Type IV - Traffic directing.
Type V - Inspection light.
Style 1 - Straight.
Style 2 - Right angle (Type I and Type II only).

1.2.2 Sizes. Flashlights shall be of the following sizes, as specified (see 6.2):

2 Cell - All Types and Styles.
3 Cell - Types I, II, and III.

Beneficial comments (recommendations, additions, deletions) and any pertinent data which may be of use in improving this document should be addressed to: USA Belvoir Research and Development Center, ATTN: STRBE-DS, Fort Belvoir, VA 22060 by using the self-addressed Standardization Document Improvement Proposal (DD Form 1426) appearing at the end of this document or by letter.

FSC 6230

Commander

1.3 Nomenclature. Nomenclature for type I, type II, and type V flashlights covered by this specification are as follows (see 6.6):

Type I - Style 1 - Regular standard straight 2-cell flashlight MX-993 ( )/U.
Type I - Style 2 - Regular standard right angle 2-cell flashlight MX-991 ( )/U.
Type II - Style 1 - Explosion proof straight 2-cell flashlight MX-992 ( )/U.
Type II - Style 2 - Explosion proof right angle 2-cell flashlight MX-212 ( )/U.
Type I - Style 1 - Regular standard straight 3-cell flashlight MX-994 ( )/U.
Type II - Style 1 - Explosion proof straight 3-cell flashlight MX-6735 ( )/U.
Type V - Style 1 - Inspection light straight 2-cell flashlight MX-6736 ( )/U.

2. APPLICABLE DOCUMENTS

2.1 Government documents.

2.1.1 Specifications and standards. Unless otherwise specified (see 6.2), the following specifications and standards of the issue listed in that issue of the Department of Defense Index of Specifications and Standards (DoDISS) specified in the solicitation, form a part of this specification to the extent specified herein.

SPECIFICATIONS

FEDERAL

L-P-390	- Plastic, Molding, and Extrusion Material, Polyethylene and Copolymers (Low, Medium, and High Density).
L-P-393	- Plastic Molding Material, Polycarbonate, Injection and Extrusion.
L-P-1183	- Plastic Molding Material, Acrylonitrile-Butadiene-Styrene (ABS), Rigid.
QQ-B-626	- Brass, Leaded and Nonleaded: Rod, Shapes, Forgings, and Flat Products with Finished Edges (Bar and Strip).
QQ-B-750	- Bronze, Phosphor; Bar, Plate, Rod, Sheet, Strip, Flat Wire, and Structural and Special Shaped Sections.
PPP-B-566	- Boxes, Folding, Paperboard.
PPP-B-601	- Boxes, Wood, Cleated-Plywood.
PPP-B-636	- Boxes, Shipping, Fiberboard.

MILITARY

MIL-M-14	- Molding Plastics and Molded Plastic Parts, Thermosetting.
MIL-B-18	- Batteries, Dry.
MIL-P-116	- Preservation, Methods of.
MIL-V-173	- Varnish, Moisture-and-Fungus-Resistant (for Treatment of Communications, Electronic and Associated Equipment).
MIL-C-5040	- Cord, Nylon.
MIL-F-14072	- Finishes for Ground Signal Equipment.
MIL-C-25050	- Color, Aeronautical Lights and Lighting Equipment, General Requirements for.

STANDARDS

FEDERAL

FED-STD-151	- Metals; Test Methods.

MILITARY

MIL-STD-105	- Sampling Procedures and Tables for Inspection by Attributes.
MIL-STD-129	- Marking for Shipment and Storage.
MIL-STD-130	- Identification Marking of US Military Property.

(Copies of specifications, standards, and drawings required by contractors in connection with specific acquisition functions should be obtained from the contracting activity or as directed by the contracting officer.)

2.2 Other publications. The following document(s) form a part of this specification to the extent specified herein. The issues of the documents which are indicated as DoD adopted shall be the issue listed in the current DoDISS and the supplement thereto, if applicable.

SOUTH COAST AIR QUALITY MANAGEMENT DISTRICT

Rule 442 - Usage of Solvents

(Application for copies should be addressed to the South Coast Air Quality Management District, 9150 Flair Drive, El Monte, CA 91731.)

UNDERWRITERS LABORATORIES, INC.

UL-783 - Electric Flashlights and Lanterns for Use in Hazardous Locations, Class 1, Groups C and D.

(Applications for copies should be addressed to the Underwriters Laboratories, Inc., 207 East Ohio Street, Chicago, IL 60611; 333 Pfingsten Road, Northbrook, IL 60062; 1285 Walt Whitman Road, Melville, L.I., NY 11746; or 1655 Scott Boulevard, Santa Clara, CA 95050.)

AMERICAN SOCIETY FOR TESTING AND MATERIALS (ASTM)

D2000 - Standards Classification System for Elastomeric Materials for Automotive Applications.
D3951 - Standard Practice for Commercial Packaging.

(Application for copies should be addressed to the American Society for Testing and Materials, 1916 Race Street, Philadelphia, PA 19103.)

(Industry association specifications and standards are generally available for reference from libraries. They are also distributed among technical groups and using Federal agencies.)

2.3 Order of precedence. In the event of a conflict between the text of this specification and the references cited herein, the text of this specification shall take precedence.

3. REQUIREMENTS

3.1 Description. The flashlights shall be of molded plastic, tubular construction and shall be similar to figures 1 through 9 except as specified herein (see 6.7). Flashlights shall conform to the dimensions shown on the figures. Unless otherwise specified in 3.8.1.2, flashlights shall be furnished complete with lenses, filters, and lamps as indicated below.

Flashlight	Lenses	Filters	Lamps
Type I, Style 1, 2-cell	Spot (1), diffused (1)	Blackout (1), red (3)	2
Type I, Style 2, 2-cell	Spot (1), diffused (1)	Blackout (1), red (3)	2
Type II, Style 1, 2-cell	Spot (1), diffused (1)	Blackout (1), red (3)	2
Type II, Style 2, 2-cell	Spot (1), diffused (1)	Blackout (1), red (3)	2
Type I, Style 1, 3-cell	Spot (1), diffused (1)	Blackout (1), red (3)	2
Type II, Style 1, 3-cell	Spot (1), diffused (1)	Blackout (1), red (3)	2
Type III, Style 1, 2-cell	Spot (1)		2
Type III, Style 1, 3-cell	Spot (1)		2
Type IV, Style 1, 2-cell	Spot (1)	Blackout (1) Amber (1) Green (1) Red (3)	2

3.1.1 Types II and III flashlights. The types II and III flashlights shall be explosion proof of a design approved by the Mine Safety Health Administration (MSHA) for safe use in methane-air mixture, and shall be listed by the Underwriters Laboratories, Inc., UL 783 for class I, Groups C and D (see 6.5). The type III flashlight shall be heat resistant.

3.2 First article. The contractor shall furnish 12 flashlights for examination and testing within the time frame specified (see 6.2) to prove prior to starting production that his production methods will produce flashlights that comply with the requirements of this specification. Examination and tests shall be as specified in section 4 and shall be subject to surveillance and approval by the Government (see 6.3).

3.3 Materials. Materials shall be as specified herein. Materials not specified shall be selected by the contractor, shall be suitable for the purpose intended, and shall be subject to all provisions of this specification. The material shall be free from all defects and imperfections that may affect the quality and reliability of the finished product. Flashlights fabricated of materials other than those specified herein and any design changes required due to the use of such materials, shall be subject to approval by the contracting officer.

3.4 Construction.

3.4.1 Flashlight case. Each flashlight (except type III, style 1), shall have a case fabricated from acrylonitrile-butadiene-styrene conforming to L-P-1183, type VI. For type III, style 1 flashlights, the case shall be molded from plastic compound conforming to MIL-M-14, type CFI-20. The exterior surface of the case shall have molded flutes or ribs for ease in handling. The flutes or ribs shall be parallel to the longitudinal axis of the case and shall be raised approximately 1/32 inch from the surface of the case. Not less than five nor more than 20 flutes or ribs shall be provided around the circumferance of the case. Means shall be provided to prevent the dry cell inserted into the flashlight from damaging the base of the lamp, reflector or any internal part which could render the flashlight unserviceable when tested as specified in 4.6.14.

3.4.2 Lens caps, end caps, retainers, and other plastic parts. The flashlights (except types IV and V) shall have a means such as threaded lens caps and filter caps for securing the lenses, reflectors, and filters (where used) in place. The flashlight shall have a means such as threaded end caps and battery retainers for securing the dry cells and providing stowage for the spare lamp. The flashlights (except type III, style 1) shall have a stowage compartment for the stowage of diffusing lens and filters. All flashlights shall be initially fitted with the spotlight lens. Type I, style 2 and type II, style 2 flashlights shall have a lens retainer as shown in figures 2 and 4, respectively. The lens retainers shall be in accordance with figure 15. When specified (see 6.2), only the lens retainer shall be furnished. External surfaces of all caps and retainers shall be fluted, ribbed or knurled for securing gripping. Except for type III, style 1 flashlights, all lens caps, end caps, battery retainers, filter caps and lampholders shall be fabricated from acrylonitrile-butadiene-styrene conforming to L-P-1183, type VI. For type III, style 1 flashlights, lens caps, end caps, and any other plastic parts (except case) (see 3.4.1) may be molded from plastic compounds conforming to MIL-M-14, type MFH or CFI-20 or polycarbonate conforming to L-P-393.

3.4.3 Inspection light collar. The configuration of the collar, for attaching the flexible inspection light to the type I, style 1 flashlight case, shall be as shown in figure 11. The collar shall be fabricated from acrylonitrile-butadiene-styrene conforming to L-P-1183, type VI. The collar shall be threaded for attachment to the flashlight case.

3.4.3.1 Flexible extension. A flexible extension for carrying the conductors between battery and lamp-head housing shall be secured to the upper end of the collar. The opposite end of the extension shall be secured to the lamp-head housing. The extension shall be watertight and corrosion resistant (see 3.17.3). The extension shall not be damaged (see 6.4.1) or shall be able to stay in any specific position when tested as specified in 4.6.8. When specified (see 6.2), only the extension shall be furnished.

3.4.3.2 Lamp-head housing. The lamp-head housing shall be constructed of acrylonitrile-butadiene-styrene conforming to L-P-1183, type VI, or a corrosion-resistant metal treated for corrosion resistance in accordance with MIL-F-14072. The housing shall permit replacement of the lamp. The lamp shall not become loose or displaced during rough handling when tested as specified in 4.6.14. Lamp filament or lamp envelope damage shall not be a cause for rejection.

3.5 Storage compartment. Each flashlight, except type III, style 1, shall have a storage compartment in the end cap for storing either six filters or one lens and four filters. The lens and filters shall be accessible, and shall not become damaged (see 6.4.1) when tested as specified in 4.6.14.

3.5.1 Holder for spare lamp. Each flashlight shall be furnished with a spare lamp (see 3.16 and 3.16.1). The spare lamp shall be mounted in a holder inside the battery retainer cap in such a manner so as to be accessible, and shall not become loose or displaced when tested as specified in 4.6.14. Lamp filament or lamp envelope damage shall not be a cause for rejection.

3.6 Gaskets. Gaskets shall be provided on all flashlights, where necessary, to prevent the entrance of moisture into the interior of the flashlight or into the switch contacts. Gaskets shall be fabricated from rubber composition conforming to ASTM D2000, grades 3AA510B13C12F17, 3AA610B13C12F17, or 3AA710B13C12F17.

3.7 Switches.

3.7.1 Switch. The switch for type I, styles 1 and 2, type II, styles 1 and 2, type IV and type V mounted on the side of the flashlight case, shall be of the push-slide type to provide a locked "OFF", "FLASHING" and positive "ON" position, and shall be operable with one hand. Life expectancy of the switch shall be 25,000 cycles when tested as specified in 4.6.1.2. The flashlight shall not go off when shaken vigorously while the switch is in either the "ON" or "FLASHING" position. The switch shall not have internal electrical leakage when tested as specified in 4.6.1. The switch shall be guarded to protect it from damage when tested as specified in 4.6.14.

3.7.2 Switch. The switch for type III, style 1, mounted on the side of the flashlight case, shall be of the push-slide type to provide a locked "OFF" and a positive "ON" position, and shall be operable with one hand. The switch shall allow for flashing in the "OFF" position. Life expectancy of the switch shall be 25,000 cycles, when tested as specified in 4.6.1.2. The flashlight shall not go off when shaken vigorously while the switch is in the "ON" position. The switch shall not have internal electrical leakage when tested as specified in 4.6.1. The switch shall be guarded to protect it from damage when tested as specified in 4.6.14.

3.8 Threads.

3.8.1 General. Threads on each flashlight shall be tight, when a torque of 30 pounds-inch plus or minus 2 pounds-inch is applied. Threads shall not strip or ride over those of the mating part when a torque of 50 pounds-inch plus or minus 2 pounds-inch is applied.

3.8.1.1 Type I, type II, type IV and type V. Threads on the case at the light projection end of the type I, type II, type IV and type V flashlights shall be in accordance with figure 13. The mating part shall not seat on the case collar when the threads are engaged.

3.8.1.2 Traffic directing baton. The traffic directing baton shall be constructed of material conforming to L-P-390, type I, class L, grade I, natural color, and shall be in accordance with figure 10. All threads shall be engaged when the baton assembled with its gasket is screwed onto the flashlight case (type I, style 1) equipped with batteries, reflector, bulb, and filter. When specified (see 6.2), only the traffic directing baton shall be furnished.

3.8.1.3 Inspection-light collar. The inspection-light collar for attaching the inspection-light assembly (type V, style 1) to a regular standard flashlight case (type I, style 1) shall have threads to mate with threads as shown in figure 13. All threads shall be engaged when the inspection light assembled with a gasket is screwed onto the case.

3.9 Reflector. The reflector shall be made of metal or plastic and the contour shall be essentially parabolic, projecting a beam of light as specified in 3.18.2.1. The reflecting surface shall be vacuum plated or electro-plated to assure a coefficient of reflection of at least 75 when tested as specified in 4.6.5. The reflector shall have sufficient rigidity to prevent distortion when the lamp batteries are in place. The reflecting surface shall be smooth and free from bubbles and pits. The plastic shall conform to L-P-1183, type VI.

3.10 Suspension ring. A suspension ring, made of either phosphor bronze conforming to QQ-B-750, composition A, half hard; or brass conforming to QQ-B-626, alloy No. 260 or 268, half hard, shall be secured to the bottom cap of each flashlight except type III, style 1 (see 3.10.2). Each ring shall be of one-piece construction and shall be fastened so that it cannot be readily

detached by hand. The ring shall seat firmly to and recess in the bottom cap when not in use, and shall support a weight of 25 pounds without evidence of distortion when tested as specified in 4.6.3.

3.10.1 Nylon cord. In addition to the suspension ring specified in 3.10, the traffic-directing flashlight (type IV, style 1) shall have a 30-1/2 inch long nylon cord, conforming to MIL-C-5040, type III, color as specified for the case (see 3.21). The cord shall be fabricated into a loop and shall then be affixed to the suspension ring with a lark-head knot. The ends of the cord shall be treated to prevent raveling.

3.10.2 Suspension ring for type III, style 1. A suspension ring shall be secured to the side of the case near the end cap and on the opposite side of the case from the switch. The ring shall be fastened in such a manner that it cannot be detached by hand. The ring material shall be approximately 3/32 inch in diameter or thickness. The suspension ring shall seat firmly against the side of the flashlight when not in use, and shall support a weight of 25 pounds without evidence of distortion when tested as specified in 4.6.3.1. Material shall be either phosphor bronze or brass as specified in 3.10.

3.11 Belt clips. In addition to the suspension ring specified in 3.10, all style 2 flashlights shall be furnished with a belt clip secured to the back of the flashlight case and parallel to the longitudinal axis of the case. The belt clip shall be positioned longitudinal in the upper half of the flashlight case. The open end of the clip shall face the butt end of the flashlight, and shall exert a minimum spring tension of 2 pounds when the tip of the spring clip is sufficiently away from the case to permit a 1/8-inch rod to pass into the spring tension area. The loop of the clip shall be capable of receiving a rod of rectangular cross section 1/8- by 1-1/8-inch with rounded edges. The clip shall support a weight of 25 pounds without loosening.

3.12 Watertightness. All flashlights shall be watertight and show no evidence of moisture within any case or any attachment with the exception of the storage compartment and filter cap when tested as specified in 4.6.11.

3.13 Explosion-proof. Each explosion-proof flashlight (types II and III) shall have two labels molded onto the side of the case indicating the following:

a. Approval by Mine Safety and Health Administration for safety in methane air mixtures, with the Mine Safety and Health Administration approval number and name of the contractor. In addition, the following information shall be included on the same or on a separate label: For use in the following explosive atmospheres only: Gasoline, petroleum, naptha, alcohol, acetone, lacquer solvent vapors, and natural gas.
b. Approved by the Underwriters Laboratories, Inc., UL-783 for class I, groups C and D (see 6.5).

3.14 Impact. All flashlights shall not be damaged or show evidence of moisture inside the flashlight except as specified in 3.12, when tested as specified in 4.6.12, 4.6.12.2, and 4.6.12.3.

3.15 Battery. The cases for all flashlights shall receive standard type BA-30 (commercial, D-size dry cells) conforming to MIL-B-18.

3.15.1 Battery-contact spring. The battery-contact spring for all flashlights shall have a minimum compression of 3/8 inch and exert a minimum force of 2 pounds against the battery.

3.16 Lamps. The lamp to be supplied with all flashlights, except the inspection light flashlight (type V) shall be a prefocused, miniature, tungsten filament lamp of the following commercial types:

2 Cell	"D"	PR-6
3 Cell	"D"	PR-3

3.16.1 Lamps, inspection light flashlight (type V). The lamp to be supplied with the inspection light flashlight (type V) shall be a G-3-1/2 No. 263 clear bulb, miniature screw base.

3.17 Environmental.

3.17.1 Temperature. All flashlights shall operate as specified herein at a temperature of 150° F, plus or minus 5° F.

3.17.2 Humidity. All flashlights shall operate as specified herein at a temperature of 110° F, plus or minus 2° F and a relative humidity of 85 percent plus or minus 5 percent.

3.17.3 Corrosion resistance. Metals used in the fabrication of flashlights shall be corrosive resistant or treated to resist corrosion. The metals shall be of an alloy with properties to provide the required strength and rigidity. Unless protected against electrolytic corrosion, dissimilar metals shall not be used in contact with each other. All exterior metal surfaces except the flexible extension for the type V inspection lights (see 3.4.3.1) and suspension ring of type III flashlights shall be given a durable chemical blackening or black oxide finish conforming to MIL-F-14072, type I. The flexible extension shall be coated with a minimum thickness of .0003 inch of nickle followed by an outer coating of pore-free black vinyl film, type PVC-PVA, uniformly applied at a minimum thickness of .015 inch. All flashlights shall operate as specified herein after being tested as specified in 4.6.13.2.

3.18 Light projection.

3.18.1 Inspection-light flashlight (type V). The inspection-light flashlight (type V), when equipped with the specified lamp (see 3.16.1) and operated to emit or corrected to 6.13 lumens (approximately 0.30 ampere), shall produce a spot or floodlight of uniform intensity equal to or in excess of the following values.

3.18.1.1 Floodlight. With the lens adjusted to provide a floodlight, the light emitted shall be not less than 2 candelas, 20 degrees wide in either of

two planes, perpendicular to each other, and passing through the axis of symmetry of the lamp head.

3.18.1.2 Spotlight. With the lens adjusted to provide a spotlight (in such a manner that the lamp filament is approximately at the focal point of the lens), the light emitted shall be not less than 40 candelas, 2 degrees wide or 80 candelas, 1 degree wide in either of two planes perpendicular to each other, and passing through the axis of symmetry of the lamp head.

3.18.2 Flashlights (type I, type II, styles 1 and 2, and type III).

3.18.2.1 Spotlight. When using the spotlight lens (see 3.19) located 5 feet from a screen, the plane of which is perpendicular to the optical axis of the flashlight, the flashlight shall project a concentrated beam of light not less than 5 nor more than 11 inches in diameter.

3.18.2.2 Diffused light (not applicable to type III flashlights). When using the diffusion lens (see 3.19) located 4 feet from a screen, the plane of which is perpendicular to the optical axis of the flashlight, the flashlight shall project a distributed beam of light 60 to 80 inches in diameter. The light pattern shall have a uniform distribution of light except at the center where some concentration of light is desirable.

3.19 Spotlight and diffusion lenses.

3.19.1 Spotlight lens. The spotlight lens shall be fabricated from polycarbonate conforming to L-P-393. The dimensions for the spotlight lens shall be approximately 1.690 inches in diameter and 0.064 inches thick. The light transmission shall be at least 83 percent. A spotlight lens made of clear acrylic plastic, for use with the type III flashlight, is also acceptable.

3.19.2 Diffusion lens. The diffusion lens shall be in accordance with figure 14 and shall be fabricated from polycarbonate conforming to L-P-393. The light transmission shall be at least 83 percent.

3.20 Filters.

3.20.1 Red filter for flashlights (type I, type II and type IV). The red filter shall have the configuration as shown in figure 12. The filter shall be fabricated from plastic conforming to L-P-393. The filter shall be aviation red, type I, conforming to MIL-C-25050 and shall have the following spectral transmission qualities:

a. Not over 0.2 percent transmission between wavelengths of 440 to 580 nanometers.
b. Not over 15 percent transmission at a wavelength of 600 nanometers.
c. Not under 80 percent transmission at a wavelength of 650 nanometers, as determined by tests specified in MIL-C-25050.

3.20.2 Blackout filter for flashlights (type I, style 1, type II, style 2) and the traffic-directing flashlight (type IV). The blackout filter for flashlights (type I, style 1, type II, style 2) and the traffic-directing flashlight (type IV) shall have a configuration as shown in figure 12. The filter shall be fabricated from plastic, conforming to L-P-393. The filter shall be opaque and shall have a light transmission of from 0.02 to 0.27 percent over the entire visible spectrum when tested as specified in 4.6.7.2.

3.20.3 Amber filter for the traffic-direction flashlight (type IV). The amber filter for the traffic-directing flashlight (type IV) shall have a configuration as shown in figure 12. The filter shall be fabricated from plastic, conforming to L-P-393. The filter shall be aviation amber, type I, conforming to MIL-C-25050.

3.20.4 Green filter for the traffic-directing flashlight (type IV). The green filter for the traffic-directing flashlight (type IV, style 1) shall be fabricated from plastic, conforming to L-P-393. The filter shall be aviation green, type I, conforming to MIL-C-25050.

3.21 Color of flashlights. The color of the plastic case, lens cap, end cap, and any exposed plastic switch parts for the type I, type IV, and type V flashlight shall be one color as specified (see 6.2). The color of the plastic case for type II and type III flashlights shall be black. The color of the lens cap, end cap and any exposed plastic switch parts for type II and type III flashlights shall be yellow obtained without the use of paint, enamel, or any postmolding application.

3.22 Fungus and moisture resistance. The electrical circuitry, including all components and connections, except as specified below, shall be protected from the effects of fungus growth and moisture by an overall treatment with a varnish conforming to MIL-V-173, composition I or II as applicable (see 3.22.1), with 7 plus or minus 1 percent salicylanilide or 1 percent copper 8-quinolinolate (by weight) based on the nonvolatile content of the varnish:

a. Components or circuit elements that are inherently fungus and moisture resistant or which are hermetically sealed need not be treated.
b. Components or circuit elements whose functions will be adversely affected by the varnish coating shall not be treated.

When used, the varnish shall be applied by spray, brush, or a combination of both to give a dry-film thickness of not less than 1 mil to component or element surfaces previously cleaned and prepared so that the surfaces are free from all foreign matter which would interfere with the adherence or function of the varnish.

3.22.1 Composition. Composition II shall be used only in the case when local air pollution regulations governing the application of varnish precludes the use of composition I. When composition II is used, the contractor shall provide evidence to the Government that the use of composition II is required, and shall certify that the composition II material complies with Rule 442, South Coast Air Quality Management District.

3.23 Identification. Flashlights shall be marked in accordance with MIL-STD-130, except that only the nomenclature and contractor's identification shall be included as information and molded on the outside of the flashlight case. In addition, explosion-proof flashlights shall be marked as specified in 3.13.

3.24 Workmanship/safety. The finished flashlight shall not contain rough edges, blemishes, or other disfigurations which could affect serviceability or appearance. All parts shall be clean, free from rust, toolmarks, pits and other injurious defects. External surfaces shall be free of burrs, sharp edges and corners except where sharp edges or corners are required or where they are not detrimental to safety.

4. QUALITY ASSURANCE PROVISIONS

4.1 Responsibility for inspection. Unless otherwise specified in the contract, the contractor is responsible for the performance of all inspection requirements as specified herein. Except as otherwise specified in the contract, the contractor may use his own or any other facilities suitable for the performance of the inspection requirements specified herein, unless disapproved by the Government. The Government reserves the right to perform any of the inspections set forth in the specification where such inspections are deemed necessary to assure supplies and services conform to prescribed requirements.

4.2 Classification of inspections. The inspection requirements specified herein are classified as follows:

a. First article inspection (see 4.3).
b. Quality conformance inspection (see 4.4).
c. Inspection of packaging (see 4.7).

4.3 First article inspection.

4.3.1 Examination. Each first article flashlight shall be examined in accordance with table I. Presence of one or more defects shall be cause for rejection of all flashlights.

4.3.2 Tests. Following successful completion of the examination, the first article flashlights shall be subjected to the tests marked "X" in column 1 of table II. Failure of any test shall be cause for rejection of all first article flashlights.

4.4 Quality conformance inspection.

4.4.1 Sampling. Sampling for quality conformance inspection shall be in accordance with MIL-STD-105, inspection level S4. Specific lot or batch size shall be determined by the local Government inspector, however, no individual lot or batch size shall exceed 500 items.

4.4.2 Examination. Samples selected in accordance with 4.4.1 shall be examined for the major and minor characteristics for possible defects as specified in table I. AQL shall be 4.0 percent defective for major defects and 6.5 percent defective for minor defects.

4.4.3 Tests.

4.4.3.1 Samples. Samples selected in accordance with 4.4.1 shall be subjected to the tests marked "X" in table II, column 2. For the operational test and switch leakage test, AQL shall be 1.0 percent defective. For all other tests, AQL shall be 4.0 percent defective.

4.5 Inspection procedure.

4.5.1 Examination. The sample flashlights shall be examined as specified in 4.4.2 for the major and minor characteristics for possible defects as specified in table I:

TABLE I. Examination Schedule.

Number	Characteristic	Reference Paragraph
Major		
101.	Dimensions of the flashlights not as specified.	3.1
102.	Flashlights not furnished with lenses, filters, and lamps as specified.	3.1
103.	Types II and III flashlights not as specified.	3.1.1
104.	Material not as specified.	3.3
105.	Flashlight case not fabricated as specified.	3.4.1
106.	Lens caps, end caps, retainers, and other plastic parts not as specified.	3.4.2
107.	Inspection light cap not as specified.	3.4.3
108.	Flexible extension not as specified.	3.4.3.1
109.	Lamp-head housing not as specified.	3.4.3.2
110.	Storage compartment not as specified.	3.5
111.	Holder for spare lamp not as specified.	3.5.1
112.	Gaskets not as specified.	3.6
113.	Various types and styles of switches not as specified	3.7.1, 3.7.2
114.	The various threaded connections not as specified.	3.8.1, 3.8.1.1, 3.8.1.2, 3.8.1.3
115.	Reflector not as specified.	3.9
116.	Suspension ring not as specified.	3.10
117.	Nylon cord not as specified.	3.10.1
118.	Suspension ring for type III, style I flashlight not as specified.	3.10.2

Table I. Examination schedule. (Cont'd)

Number	Characteristic	Reference Paragraph
119.	Explosion-proof flashlight (Types II and III does not have two molded labels on side of case with the warnings as specified.	3.13
120.	Cases and batteries not as specified.	3.15
121.	Lamps not as specified.	3.16
122.	Lamps, inspection light, flashlight type V, not as specified.	3.16.1
123.	Corrosion resistance of metals used in fabrication of flashlights not as specified.	3.17.3
124.	Inspection-light flashlight (type V) not as specified.	3.18.1
125.	Color of flashlights not as specified.	3.21
126.	Fungus and moisture resistance not as specified.	3.22
127.	Composition II used when local air pollution regulations accepts the use of composition I.	3.22.1
Minor		
201.	Identification marking not in accordance with MIL-STD-130.	3.23
202.	Workmanship/safety not as specified.	3.24

4.5.2 Test schedule. Tests shall be in accordance with table II.

TABLE II. Test schedule.

First article	Prod. sample	Test	Test para.	Req. para.
1	2	3	4	5
X	X	Operation.	4.6.1.1	3.7
X	-	Switch endurance.	4.6.1.2	3.7
X	X	Switch leakage.	4.6.1	3.7
X	-	Threads.	4.6.2	3.8
X	X	Suspension ring.	4.6.3	3.10
X	X	Light projection (type V).	4.6.4.1	3.18.1
X	X	Light projection (type I, type II, styles 1 and 2, and type III).	4.6.4.2	3.18.2
X	X	Reflector.	4.6.5	3.9
X	X	Lenses.	4.6.6	3.19
X	X	Filters.	4.6.7.1, 4.6.7.2, 4.6.7.3	3.20

TABLE II Test Schedule. (Con't)

First Article	Prod. sample	Test	Test para.	Req. para.
1	2	3	4	5
X	-	Flexible extension.	4.6.8	3.4.3.1
X	X	Belt clip.	4.6.9	3.11
X	-	Battery-contact spring.	4.6.10	3.15.1
X	X	Watertightness.	4.6.11	3.12
X	-	Impact.	4.6.12	3.14
X	-	Environmental.	4.6.13	3.17
X	X	Rough use.	4.6.14	3.4.1, 3.4.3.2, 3.5, 3.7

4.6 Tests.

4.6.1 Switch leakage. With the lamp and reflector removed, insert batteries into the flashlight. Connect a voltmeter (Simpson Model 260 or equal) across the switch and battery or the switch and battery contacts as appropriate, in such a way as to read the battery voltage through the switch. With the switch in the "OFF" position, read the voltage. Any distinguishable deflection of the meter hand when the meter is set in the voltage range, nearest the battery voltage, shall constitute failure of this test.

4.6.1.1 Operation. Insert batteries into the flashlight and operate the switch five times in each of the three switch positions (see 3.7.1 and 3.7.2). Shake the flashlight vigorously in each "ON" and "FLASHING" switch position. Nonconformance to 3.7.1 or 3.7.2 shall constitute failure of this test.

4.6.1.2 Switch endurance. The contact switch mechanism of the flashlight shall be tested by operating the switch for 25,000 continuous cycles at 15 to 20 cycles per minute. A cycle shall consist of movements from "OFF" position to full "ON" position and back to "OFF" position. The switch shall be operated under normal electrical load conditions, and the lamp and batteries shall be replaced as often as required to insure that the switch mechanism is operating under normal load throughout the 25,000 cycles. Burning out of bulbs and batteries during the test shall not constitute failure of this test. Failure of the switch to complete 25,000 cycles shall constitute failure of this test.

4.6.2 Threads. The flashlight shall first be disassembled and then reassembled by applying a torque of 30 pounds-inch plus or minus 2 pounds-inch to tighten up the caps and other threaded parts. The flashlight shall be examined for any evidence of fault in threads. Then a torque of 50 pounds-inch plus or minus 2 pounds-inch shall be applied to each of the threaded parts of the case and the flashlight. Nonconformance to 3.8.1 shall constitute failure of this test.

4.6.3 Suspension rings. A 25-pound weight shall be suspended from the ring for a period of 1 minute with the flashlight (with batteries installed) held in a vertical position. Nonconformance to 3.10 shall constitute failure of this test.

4.6.3.1 Suspension ring for type III, style 1. A 25-pound weight shall be suspended from the ring for a period of 1 minute with the flashlight (with batteries installed) held in a horizontal position. Nonconformance to 3.10.2 shall constitute failure of this test.

4.6.4 Light projection.

4.6.4.1 Inspection-light flashlight (type V). The inspection-light flashlight (type V) shall be subjected to a photometric test. Nonconformance to 3.18.1.1 or 3.18.1.2 (where applicable) shall constitute failure of this test.

4.6.4.2 Flashlights (type I, type II, styles 1 and 2, and type III). Flashlights (type I, type II, styles 1 and 2, and type III) shall be subjected to a photometric test. Nonconformance to 3.18.2.1 or 3.18.2.2 (where applicable) shall constitute failure of this test.

4.6.5 Reflector. Reflectors shall be tested by one of the following methods:

a. Method 1. The reflector test appparatus shall consist of a non-fluctuation power supply, a variable resistor, a light meter, a PR-6 bulb and a silver-plated reflector that has had its coefficient of reflection established by an independent laboratory or the laboratory of a lamp manufacturer (to be used as a standard). The standard shall be placed in the test apparatus, the voltage shall be varied (not to exceed the normal range of the PR-6 bulb) until the reflection on the photometric cells of the light meter is equal to the known coefficient of reflection of the standard. The voltage shall then be locked. The reflectors to be tested shall then be individually placed into the test apparatus and the readings recorded. Inability to obtain the minimum coefficient specified in 3.9 shall constitute failure of this test.
b. Method 2. Reflectors shall be tested as follows: The brightness of an opal glass plate illuminated from behind by a 100-watt incandescent lamp shall be measured by means of a standard illuminometer, Pritchard Photometer, Gamma Scientific Photometer or equal. The reflector shall be placed in such a position that the brightness of the image of the opal glass plate can be measured by the illuminometer. The reflector shall be close enough to the opal glass plate so that the image is at least as large as the field of view of the illuminometer. The coefficient of reflection shall be determined as follows:

$$\text{Coefficient of Reflection} = \frac{\text{Illuminometer Brightness Reading of Image in reflection}}{\text{Illuminometer Brightness Reading of Illuminated Opal Glass Plate}} \times 100$$

Inability to obtain the minimum coefficient specified in 3.9 shall constitute failure of the test.

4.6.6 Lenses. Both the spotlight and diffusing lenses shall be tested by means of an illuminometer. Nonconformance to 3.19 shall constitute failure of this test.

4.6.7 Filters. Filters selected for the following tests shall be chosen from those tested concurrently with the tests specified in 4.6.12 and 4.6.13.1.

4.6.7.1 Red filters. Red filters shall be tested by means of a suitable photoelectric spectrophotometer. Nonconformance to 3.20.1 shall constitute failure of this test.

4.6.7.2 Blackout filters. Blackout filters shall be tested by means of the illuminometer. Nonconformance to 3.20.2 shall constitute failure of this test.

4.6.7.3 Amber and green filters. Amber and green filters shall be tested as specified in MIL-C-25050. Nonconformance to 3.20.3 or 3.20.4 shall constitute failure of this test.

4.6.8 Flexible extension inspection-light flashlight (type V). The flexible extension, inspection-light flashlight (type V), shall be subjected to 1,500 continuous cycles of flexing. Each cycle shall consist of flexing the extension from its position when alined with the axis through the center of the lamp-head assembly to 90 degrees in one direction to 90 degrees in the opposite direction and back to its position when alined with the centerline through the assembly. The frequency of the operation shall be 15 to 20 cycles per minute. Evidence of damage or inability of the extension to stay in any position in which it is placed from alinement with the centerline of the assembly up to 100 degrees in any direction from this position at the conclusion of the 1,500 cycles of flexing shall constitute failure of this test.

4.6.9 Belt clip. The flashlight shall be held horizontally with the belt clip downward; a 2-pound weight shall then be suspended for 1 minute from the belt clip at its point of contact with the case. During this test, the clip should not lose contact with the case. Next a metal rod of rectangular cross section, 1/8 inch by 1-1/8 inches, with rounded edges shall be passed through the spring tension area and withdrawn, constituting 1 cycle. This test shall be performed for 500 cycles at a rate not to exceed 10 cycles per minute. At the end of this test, the belt clip should still remain in contact with the case. Finally, the flashlight shall be held in vertical position with the butt end up and a weight of 25 pounds shall be suspended from the belt clip at its point of anchor with the case. The belt clip should not loosen from the case. Nonconformance to 3.11 shall constitute failure of this test.

4.6.10 Battery contact spring. The rear battery contact spring shall be tested as follows:

a. Determine available length of battery compartment.
b. Subtract 4-5/8 inches (total length of 2 BA-30 batteries of minimum size conforming to MIL-B-18).

c. Place a 2-pound weight on top of the spring with the spring on a flat surface. Measure the height of the spring and compare against difference of a-b above.

Height of the spring with the weight on it less than the difference of a-b, shall constitute failure of this test.

4.6.11 Watertightness. The flashlight shall be tested as follows: Apply a torque of 30 pounds-inch plus or minus 2 pounds-inch to all threaded parts of the flashlight, complete with a lamp and dry cells. Submerge the flashlight in a salt water solution (1.04 specific gravity) at room temperature (77° F plus or minus 5° F) for 1 hour and then wipe the flashlight dry. For type I, type II, and type III, style 1 submergence shall be to a depth of 3 feet. Nonconformance to 3.12 shall constitute failure of this test.

4.6.12 Impact.

4.6.12.1 Test conditions. The flashlight, without batteries installed, shall be placed in a cold chamber at minus 40° F plus or minus 5° F for 2 hours. With the flashlight stabilized at this temperature, immediately subject it to the low- and high-impact test specified in 4.6.12.2 and 4.6.12.3. The point of impact shall be applied to:

a. The outside of the flashlight case at a point midway between the ends of the case on a side 90 degrees from the switch.
b. The lens cap or filter cap.
c. The end cap.

4.6.12.2 Low impact. Subject the flashlight to a 12 inch-pound impact using a 1-pound steel ball at each of the points of impact specified in 4.6.12.1. Provided the flashlight remains intact, next subject the flashlight to the watertightness test (see 4.6.11). Evidence of breakage from impact or nonconformance to 3.12 shall constitute failure of this test.

4.6.12.3 High impact. The flashlight, having passed the low-impact test, shall be again placed in the cold chamber and conditioned at minus 40° F plus or minus 5° F for 2 hours and then immediately subjected to a 20 inch-pound impact using a 1-pound steel ball at each of the points of impact specified in 4.6.12.1. Install fresh dry cells and determine whether the flashlight operates as specified herein. Failure of the flashlight to operate as specified herein or damage to the case, the lens or filter cap, or the end cap shall constitute failure of this test.

4.6.13 Environmental.

4.6.13.1 Heat and humidity. The flashlight, with dry cells, shall be placed on a horizontal surface and subjected to dry heat at 150° F plus or minus 5° F for 16 hours, followed by an 85 percent plus or minus 5 percent relative humidity at 110° F plus or minus 2° F for 6 hours. The flashlight shall then be compared with untested flashlights for dimensional stability, crazing of

surface, and then operated in the "FLASHING", "ON", and "OFF" positions. Any evidence of defects or nonconformance to 3.17.1 or 3.17.2 shall constitute failure of this test.

4.6.13.2 Corrosion. The flashlights, without dry cells, shall be subjected to a salt spray in accordance with FED-STD-151, method 811, for 200 hours with the exception of the type V inspection light which will be subjected for 100 hours. Next, the flashlight shall be washed with fresh water, dried, and then operated in the "FLASHING", "ON", and "OFF" positions. Evidence of corrosion or nonconformance to 3.17.3 shall constitute failure of this test.

4.6.14 Rough use. The flashlight, complete with dry cells, lamps, and lenses, shall be dropped 5 feet in free fall onto a vinyl asbestos tiled concrete floor. The flashlight shall be dropped twice in a horizontal position upon the switch/switch guard assembly, twice in a vertical position upon the head of the flashlight, and twice in a vertical position upon the base of the flashlight. Parts shall not be tightened once the test has begun. Nonconformance to 3.4.1, 3.4.3.2, 3.5, 3.5.1, 3.7.1 or 3.7.2 shall constitute failure of this test.

4.7 Inspection of packaging.

4.7.1 Quality conformance inspection of pack.

4.7.1.1 Unit of product. For the purpose of inspection, a completed pack prepared for shipment shall be considered a unit of product.

4.7.1.2 Sampling. Sampling for examination shall be in accordance with MIL-STD-105.

4.7.1.3 Examination. Samples selected in accordance with 4.7.1.2 shall be examined for the following defects. AQL shall be 2.5 percent defective.

Number	Characteristic	Reference Paragraph
Major		
128.	Method of preservation not as specified for level A.	5.1.1
129.	Consolidation not as specified for level A.	5.1.1.1
130.	Boxes not as specified for level A or B.	5.1.1, 5.1.1.1, 5.2.1, 5.2.2
131.	Preservation and packing not in accordance with the referenced document as specified for commercial.	5.1.2, 5.2.3
132.	Quantities packed together exceed that specified for level A or B.	5.2.1, 5.2.2
133.	Marking missing, illegible, incorrect or incomplete for level A, B, or commercial.	5.3.1, 5.3.2

5. PACKAGING

5.1 Preservation. Preservation shall be level A or commercial, as specified (see 6.2).

5.1.1 Level A. Each flashlight shall be preserved in accordance with MIL-P-116, method IC-2. The inner container shall be a snug-fitting box such as PPP-B-566, variety 1, style, type, and class optional.

5.1.1.1 Consolidation. Flashlights of like description, preserved as specified in 5.1.1, shall be consolidated together, in quantities as specified (see 6.2), in a close-fitting box conforming to PPP-B-636, W6c, style optional.

5.1.2 Commercial. Flashlights shall be preserved in accordance with ASTM D3951.

5.2 Packing. Packing shall be level A, level B, or commercial as specified (see 6.2).

5.2.1 Level A. Flashlights of like description, preserved as specified in 5.1, shall be packed in a close-fitting box conforming to PPP-B-601, overseas type, style optional, in quantities not to exceed 200 pounds gross weight. Box closure and strapping shall be in accordance with the appendix to the box specification.

5.2.2 Level B. Flashlights of like description, preserved as specified in 5.1, shall be packed in a close-fitting box conforming to PPP-B-636, V3c, style optional, in quantities not to exceed the gross weight or size limitation of the box. Box closure and strapping shall be in accordance with the appendix to the box specification.

5.2.3 Commercial. Flashlights shall be packed in accordance with ASTM D3951.

5.3 Marking.

5.3.1 Military packaging. Marking shall be in accordance with MIL-STD-129.

5.3.2 Commercial packaging. Marking shall be in accordance with ASTM D3951.

6. NOTES

6.1 Intended use. Flashlights covered by this specification are intended for the following use:

a. Regular standard flashlights (type I, styles 1 and 2) are intended for general use.
b. Explosion-proof flashlights (type II and type III) are intended for use in areas where danger from explosion of surrounding combustible gases, dust, or explosives is present. Type III flashlights are intended for shipboard use.

c. Traffic-directing flashlights (type IV) are intended for use as signal lights in the direction and control of vehicular military traffic under blackout and normal night driving conditions and for other signaling purposes.
d. Inspection-light flashlights (type V) are intended for use in aircraft and ground-support equipment inspection.

6.2 Ordering data. Procurement documents should specify the following:

a. Title, number, and date of this specification.
b. When only spot lens, diffusion lens, or filters are required (see 1.1).
c. Type, style, and size of flashlight required (see 1.2.1 and 1.2.2).
d. Date of issue of DoDISS applicable and exceptions thereto (see 2.1.1).
e. Time frame required for submission of first article model (see 3.2).
f. When only lens retainers are required (see 3.4.2).
g. When only flexible extensions are required (see 3.4.3.1).
h. When only traffic directing batons are required (see 3.8.1.2).
i. Color of flashlight required (see 3.21).
j. Degree of preservation and degree of packing required (see 5.1 and 5.2).
k. Quantity of flashlights to be consolidated together (see 5.1.1.1).

6.3 First article model. Any changes or deviations of production flashlights from the approved first article model during production will be subject to the approval of the contracting officer. Approval of the first article model will not relieve the contractor of his obligation to furnish flashlights conforming to this specification.

6.4 Definitions. The following definition shall apply throughout this specification.

6.4.1 Damage. Damage is deformation, loosening, breakage, cracking, change of fit of any component or part, or any condition resulting in malfunctioning of the flashlights or any component or part.

6.5 Mine Safety and Health Administration approval of explosion-proof flashlights (type II and type III). Request for design approval of explosion-proof flashlights (type II and type III) for use in methane and air mixtures should be made to the United States Department of the Interior, Mine Safety and Health Administration, 4800 Forbes Avenue, Pittsburgh, PA 15213. In addition to the application, a set of drawings, and a sample flashlight together with samples of component parts must also be forwarded. Information pertaining to the Underwriters Laboratories may be obtained by writing to the Underwriters Laboratories, Inc., 207 East Ohio Street, Chicago, IL 60611.

6.6 National Stock Numbers. The following National Stock Numbers (NSNs) have been assigned to the flashlights and parts:

ITEM	NSN
Flashlights	
Type I, Style 1, 2-cell	6230-00-270-5418
Type I, Style 1, 3-cell	6230-00-681-8570
Type I, Style 2, 2-cell	6230-00-264-8261
Type II, Style 1, 2-cell	6230-00-269-3034
Type II, Style 2, 2-cell	6230-00-161-6422
Type III, Style 1, 2-cell	6230-00-299-3035
Type III, Style 1, 3-cell	6230-00-270-5417
Type IV, Style 1, 2-cell	6230-00-926-4331
Type V, Style 1, 2-cell	6230-00-295-2194
Parts	
Baton, traffic directing (figure 10)	6230-00-691-1407
Flexible extension for inspection light (figure 11)	6230-00-111-0185
Filters (figure 12)	
Red	6230-00-111-0190
Blackout	6230-00-128-2464
Amber	6230-00-504-8342
Green	6230-00-504-8341
Lens, diffusing (figure 14)	6230-00-356-4825
Lens spot	6230-00-356-4826

6.7 Information figures. Figures 1 through 9 show types of flashlights which have been found acceptable. However, the figures are included for illustration only and are not intended to preclude the furnishing of other flashlights which conform to this specification.

Custodians:
Army - ME
Navy - SH
Air Force - 99

Review activities:
Army - EA
DLA - GS
Air Force - 82

User activities:
Army - ER, AS
Navy - MC

Preparing activity:
Army - ME

Project 6230-0273

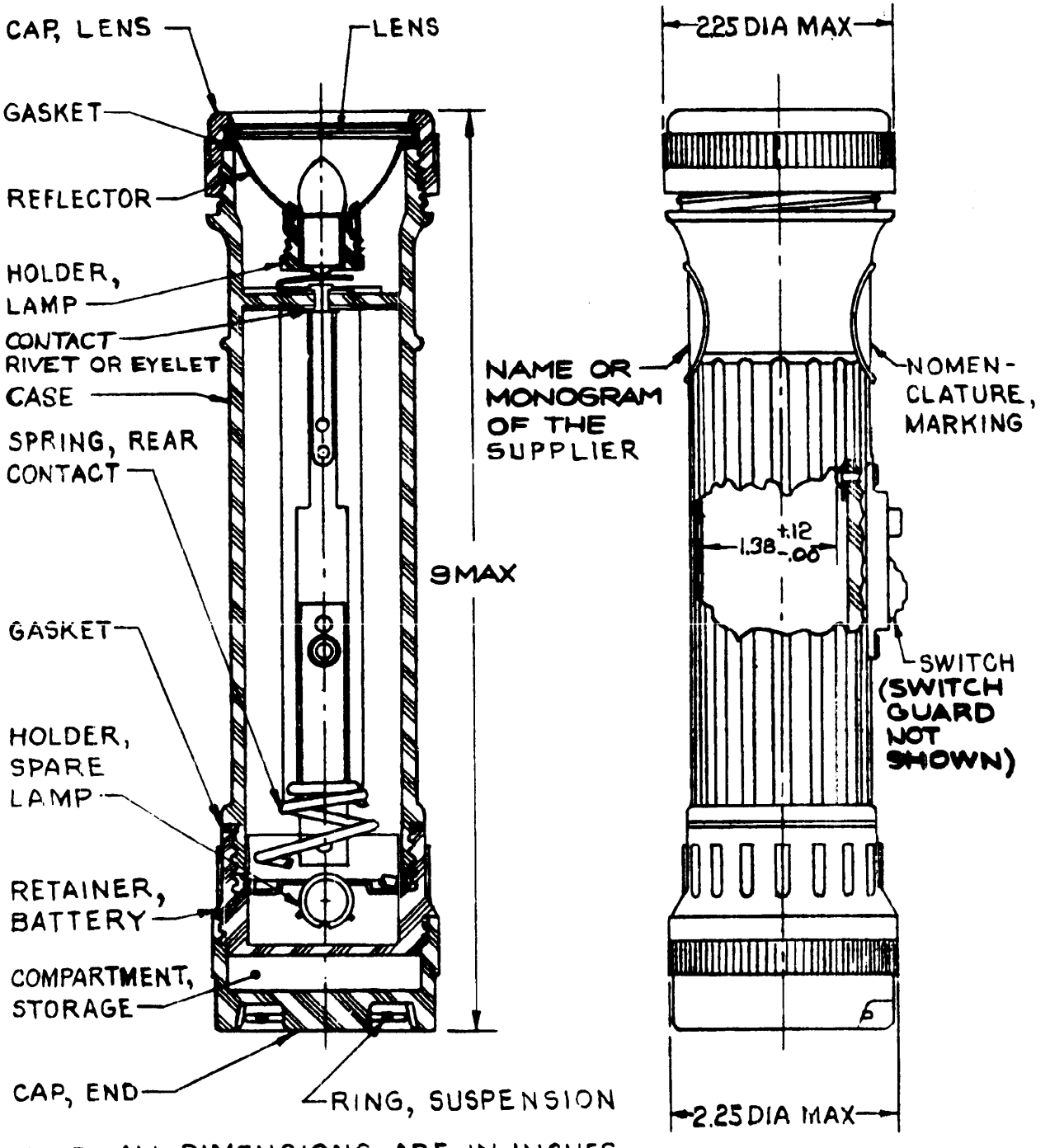

NOTE: ALL DIMENSIONS ARE IN INCHES.

FIGURE 1. Flashlight, MX-993( )/U, type I, style I, 2 cell.

X-1986D

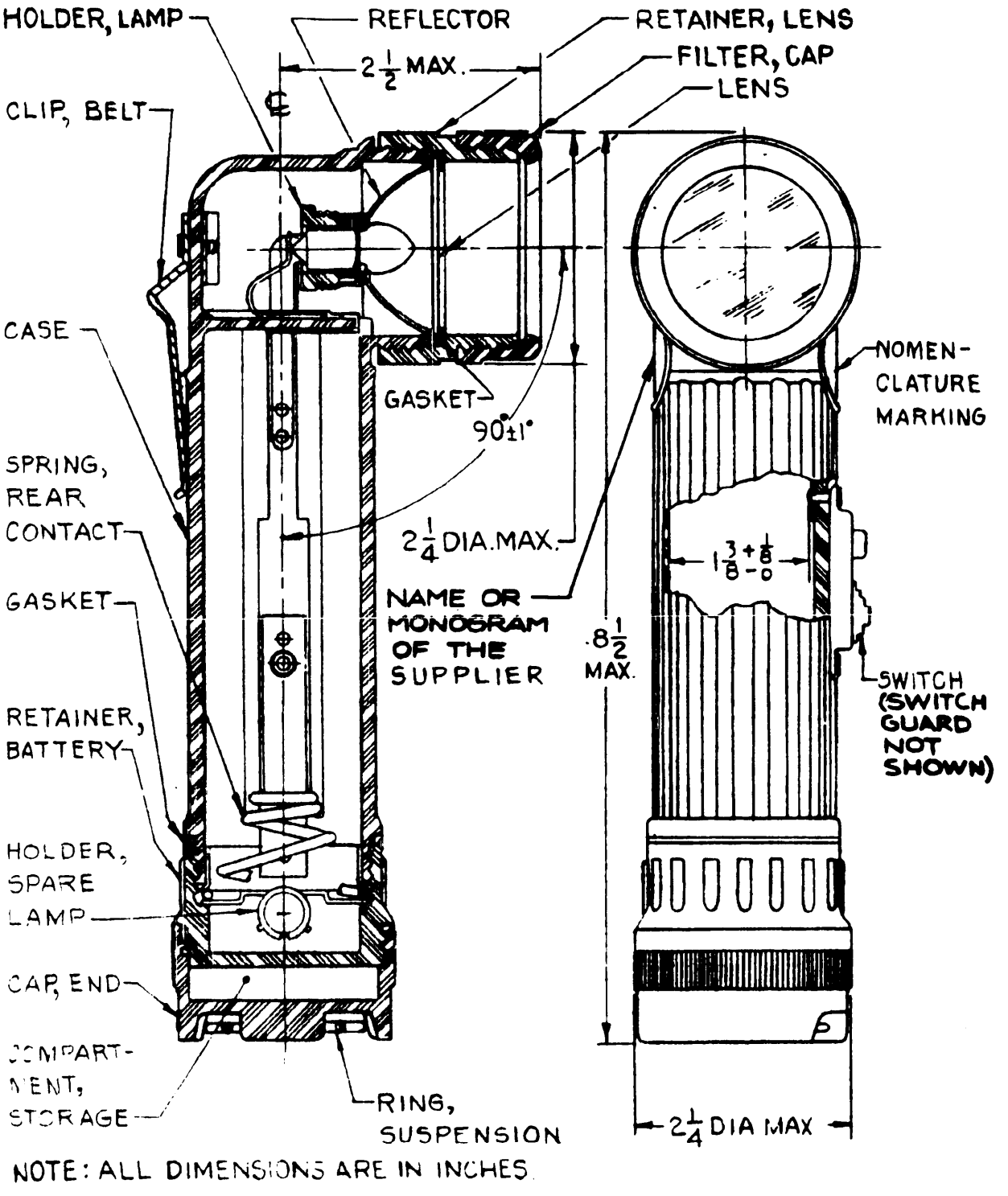

FIGURE 2.

Flashlight, MX-991( )/U, type I, style 2, 2 cell.

X-1987C

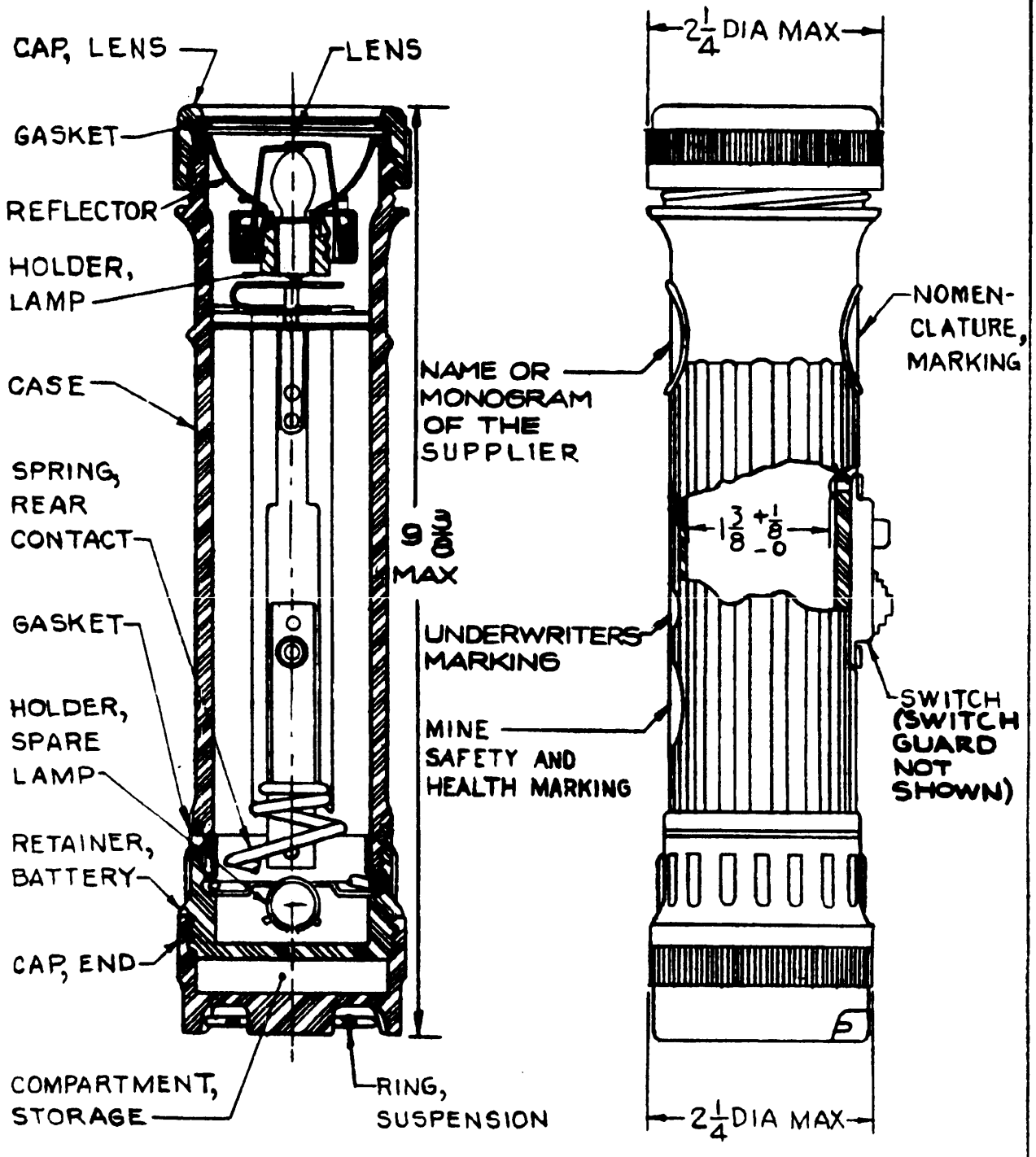

NOTE: ALL DIMENSIONS ARE IN INCHES.

FIGURE 3.

Flashlight, MX-992( )/U, type II, style 1, 2 cell.

X-1988C

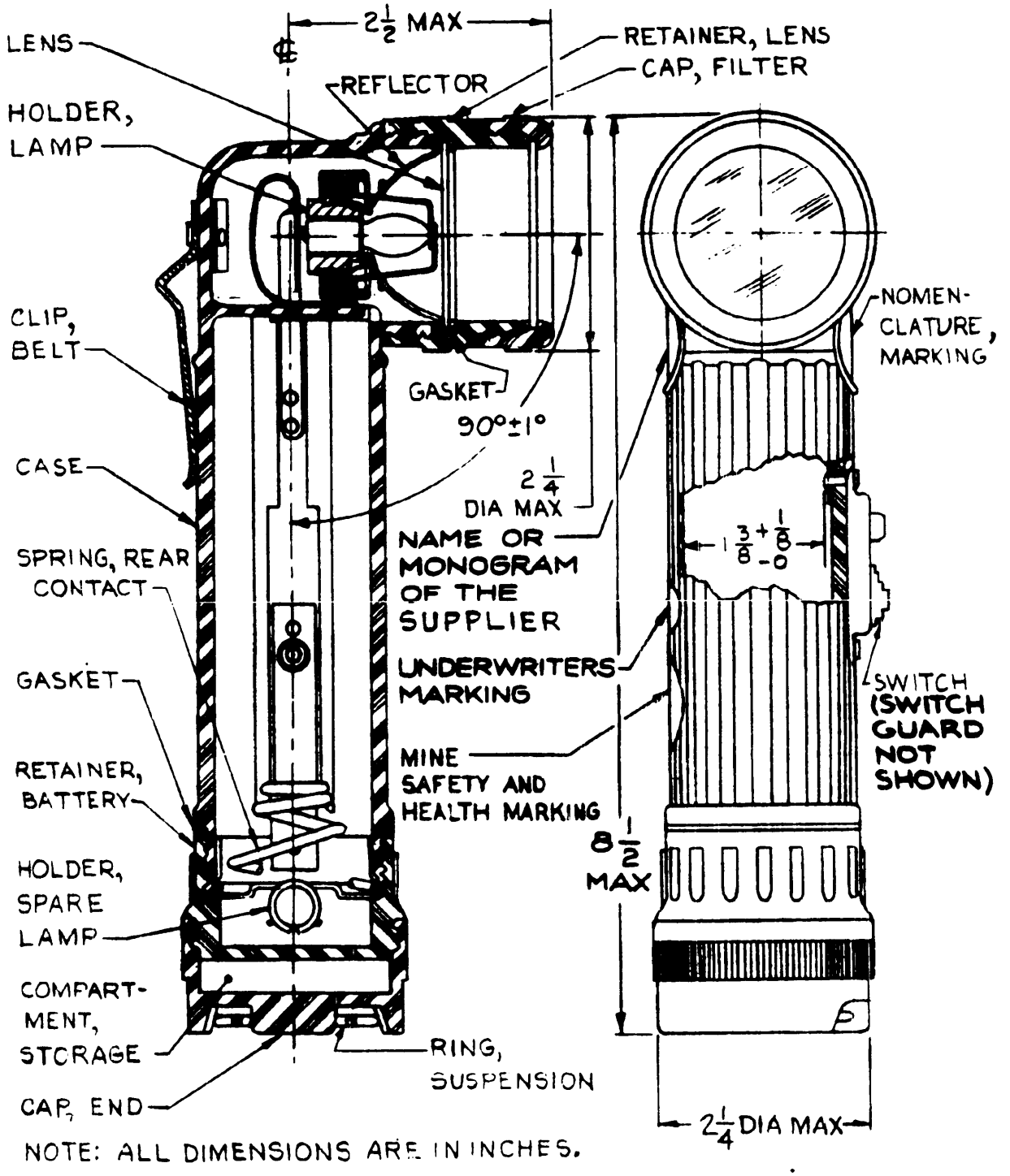

FIGURE 4.

Flashlight, MX-212( )/U, type II, style 2, 2 cell.

X-1989C

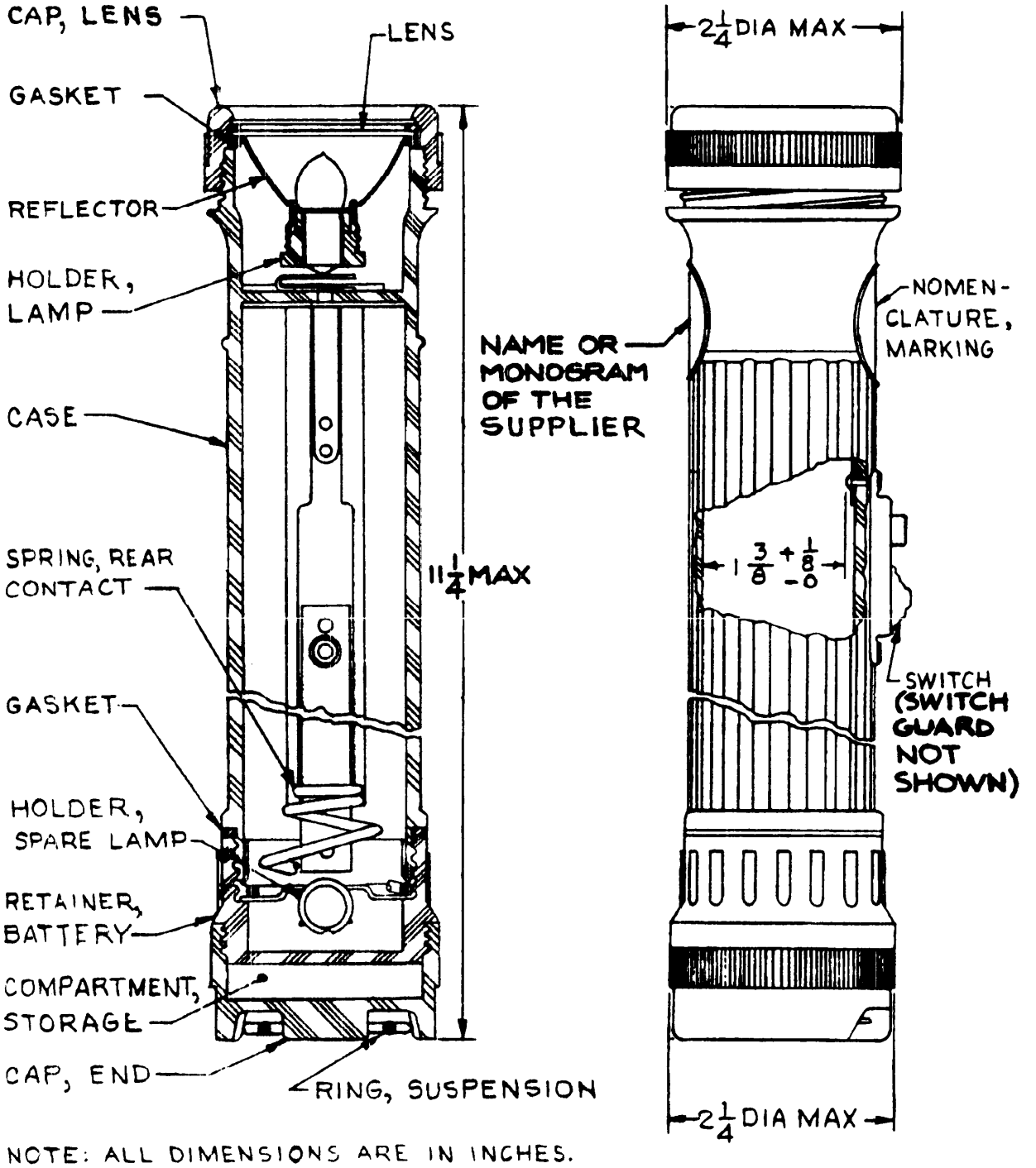

NOTE: ALL DIMENSIONS ARE IN INCHES.

FIGURE 5.

Flashlight, MX-994( )/U, type I, style I, 3 cell.

X-1990B

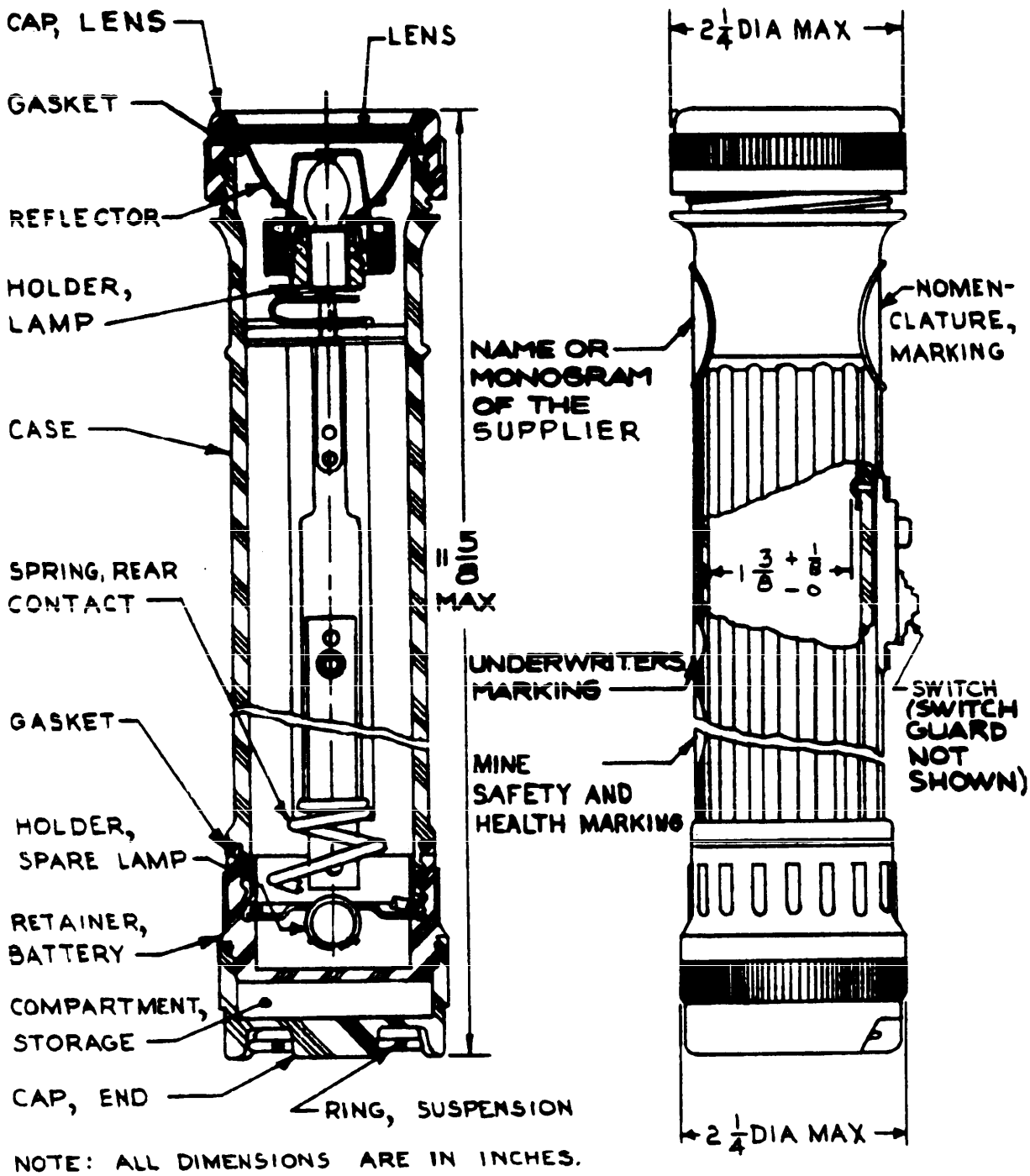

NOTE: ALL DIMENSIONS ARE IN INCHES.

FIGURE 6.

Flashlight, MX-6735( )/U, type II, style I, 3 cell.

X-1991C

X-1992C

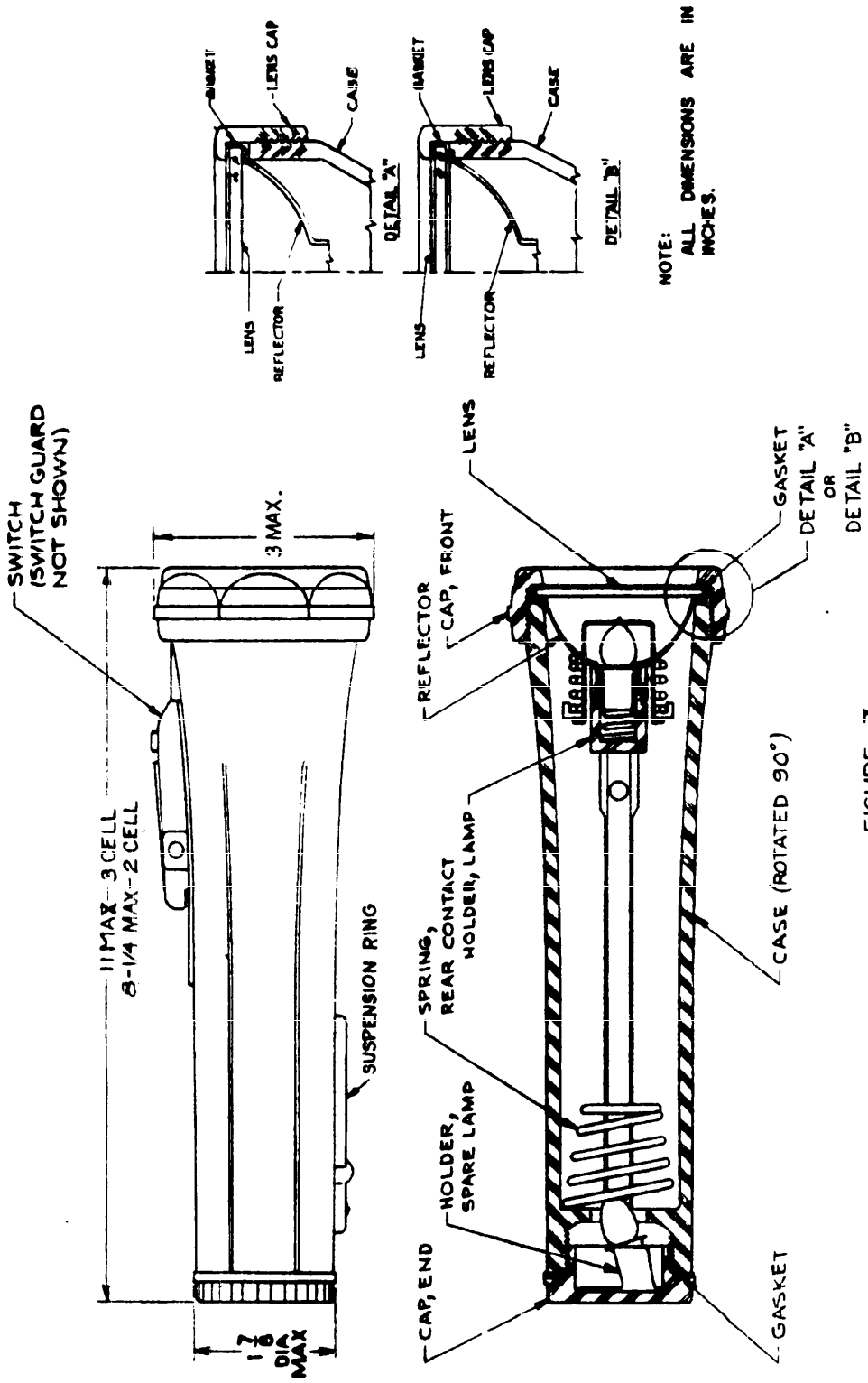

FIGURE 7.
Flashlight, type III, style 1, 2 or 3 cell.

X-1993C

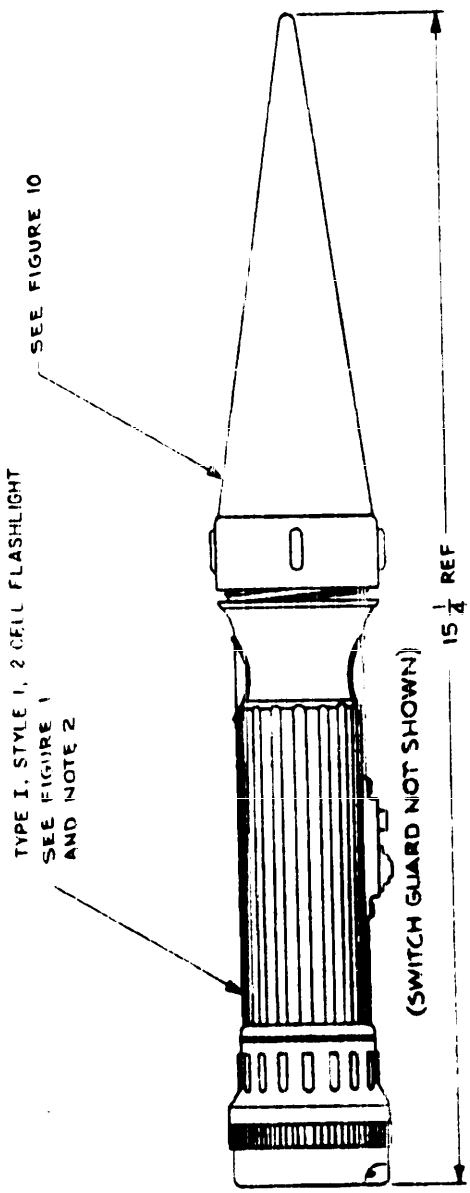

NOTES:
1. ALL DIMENSIONS ARE IN INCHES.
2. FOR THIS APPLICATION, DO NOT FURNISH LENS CAP. (SEE FIGURE 1.)

FIGURE 8.
Flashlight, traffic directing, type IV.

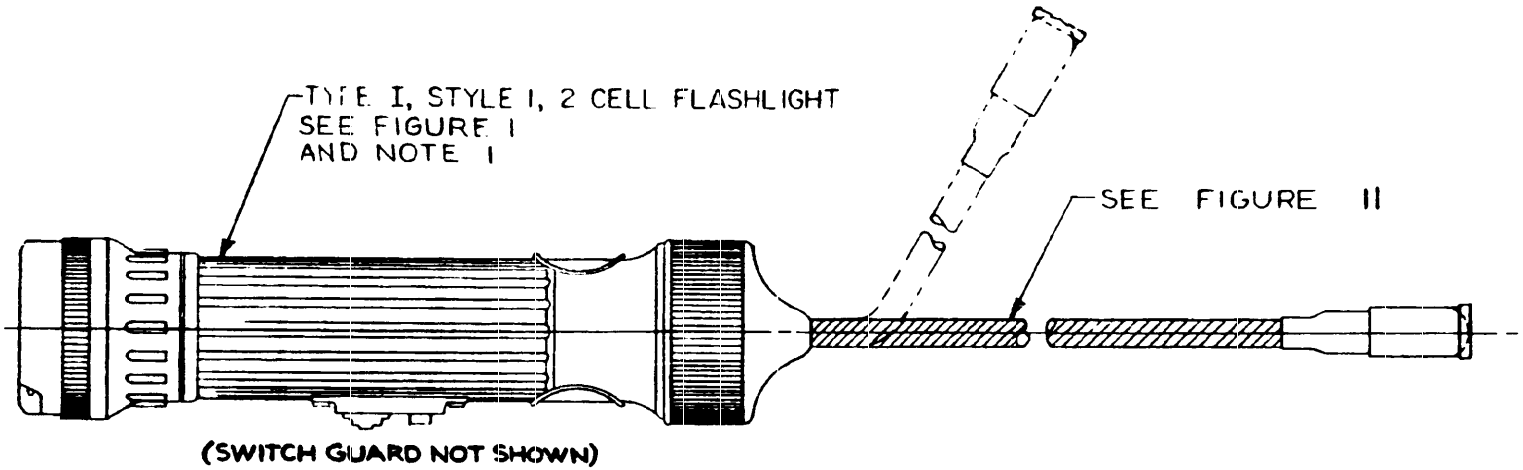

NOTE
1. FOR THIS APPLICATION DO NOT FURNISH LENS CAP (SEE FIGURE 1)

FIGURE 9.

Flashlight, MX-6736( )/U,

type V.

X-1994D

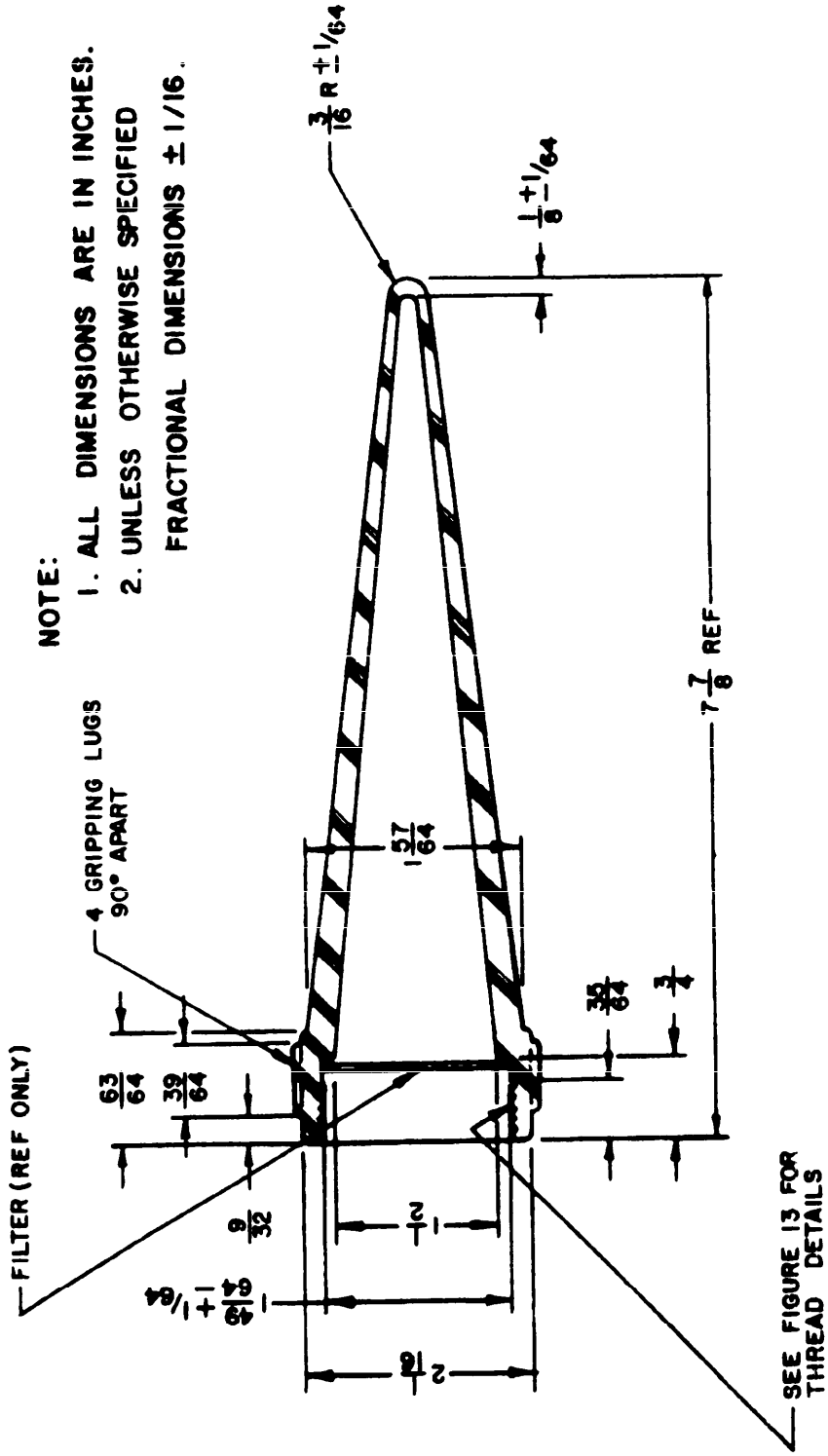

X-1995E

FIGURE 10. Baton, traffic directing.

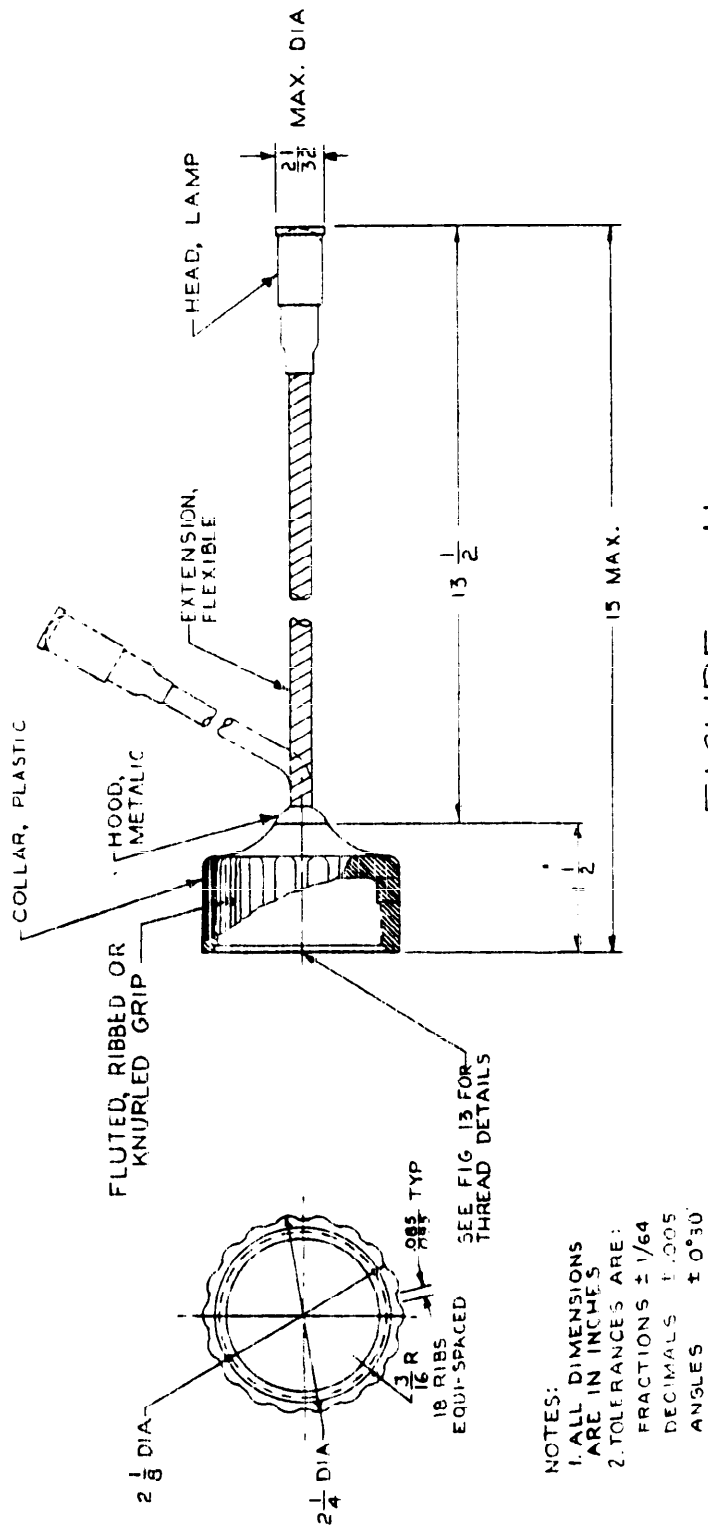

FIGURE 11
FLEXIBLE EXTENSION
FOR INSPECTION LIGHT (TYPE V)

DX-1996A

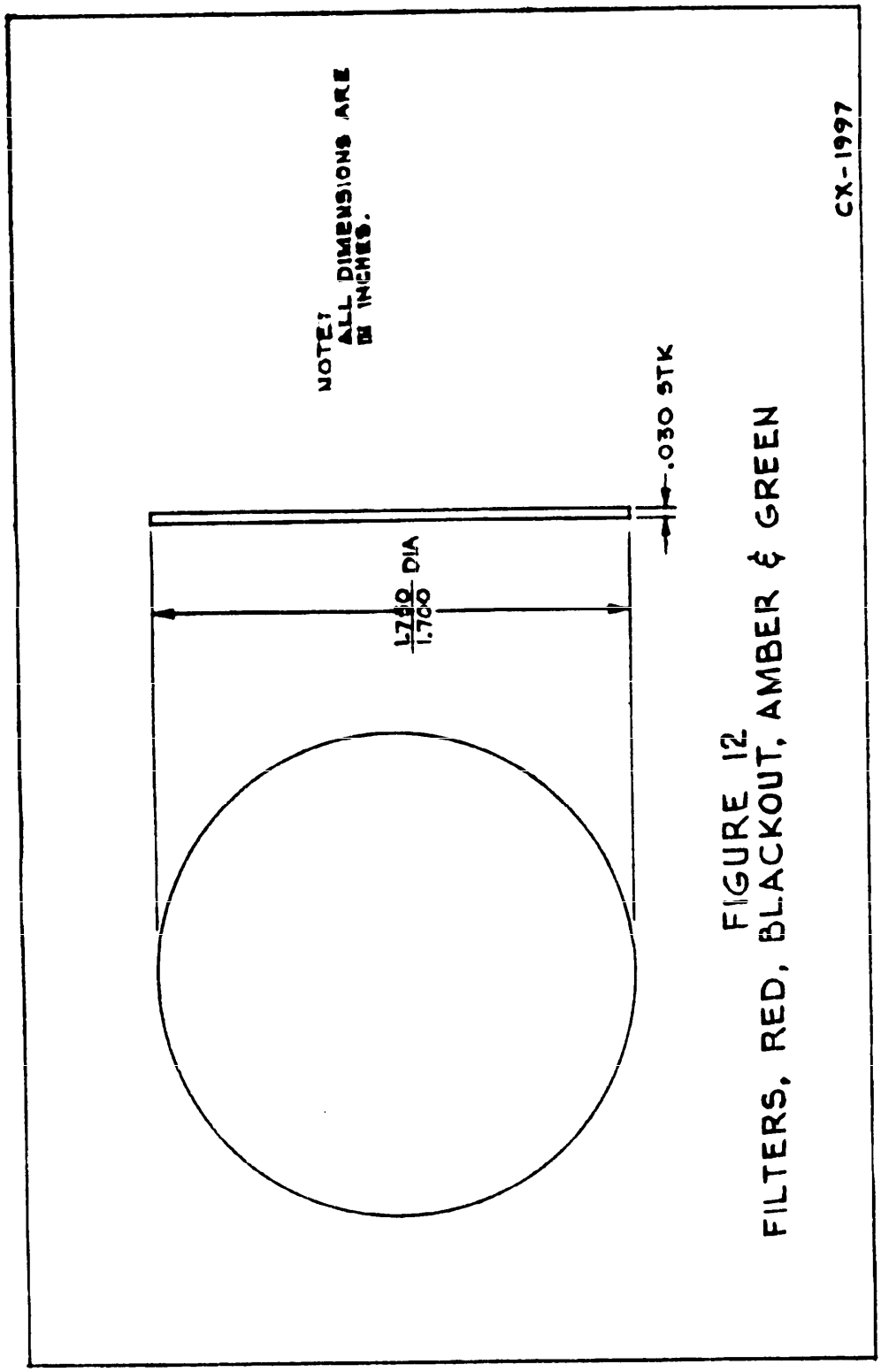

FIGURE 12
FILTERS, RED, BLACKOUT, AMBER & GREEN

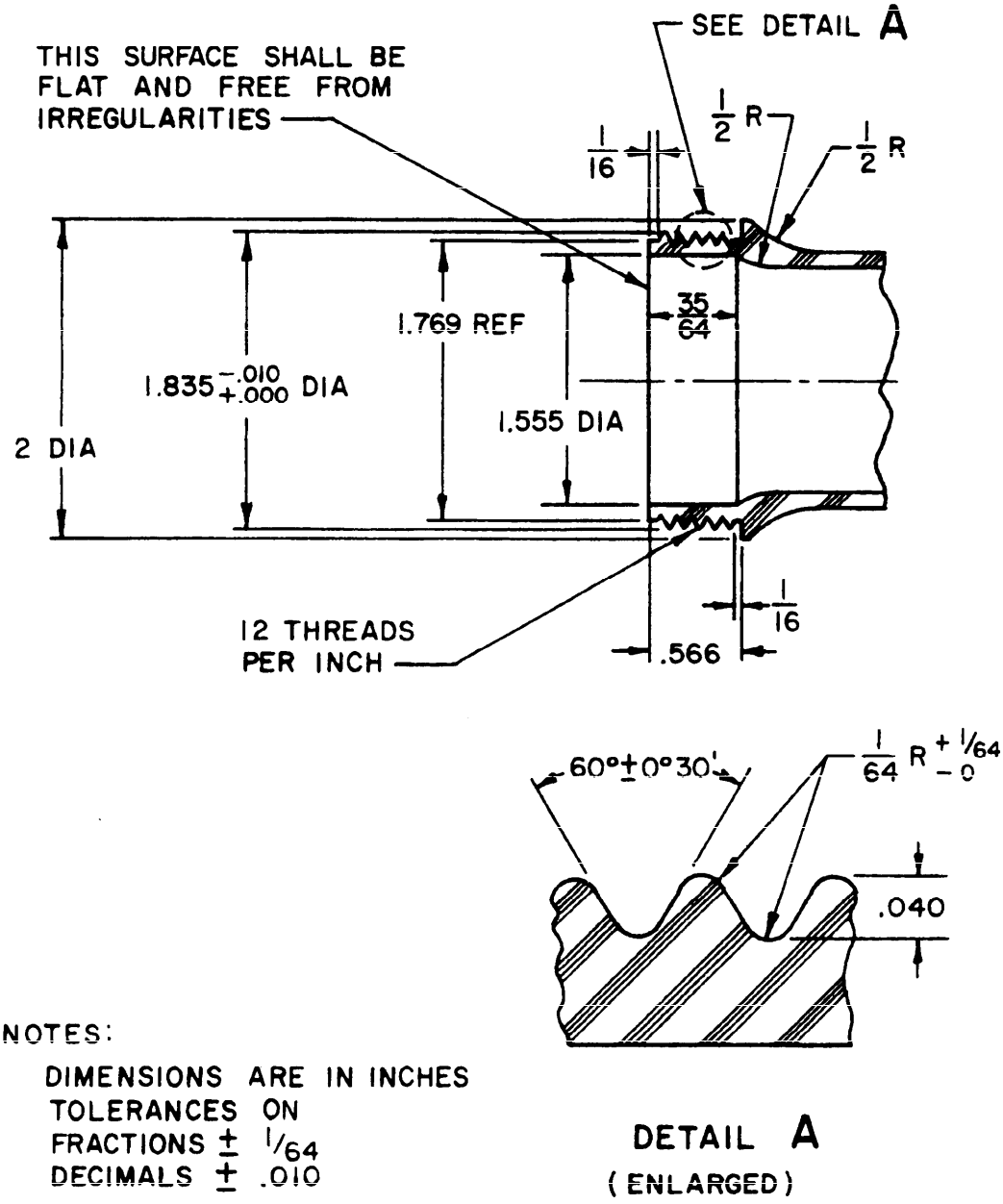

NOTES:

DIMENSIONS ARE IN INCHES
TOLERANCES ON
FRACTIONS ± 1/64
DECIMALS ± .010

DETAIL A
(ENLARGED)

FIGURE 13. Thread dimension for light projection end of type I, type II, type IV and type V flashlights.

X-1998A

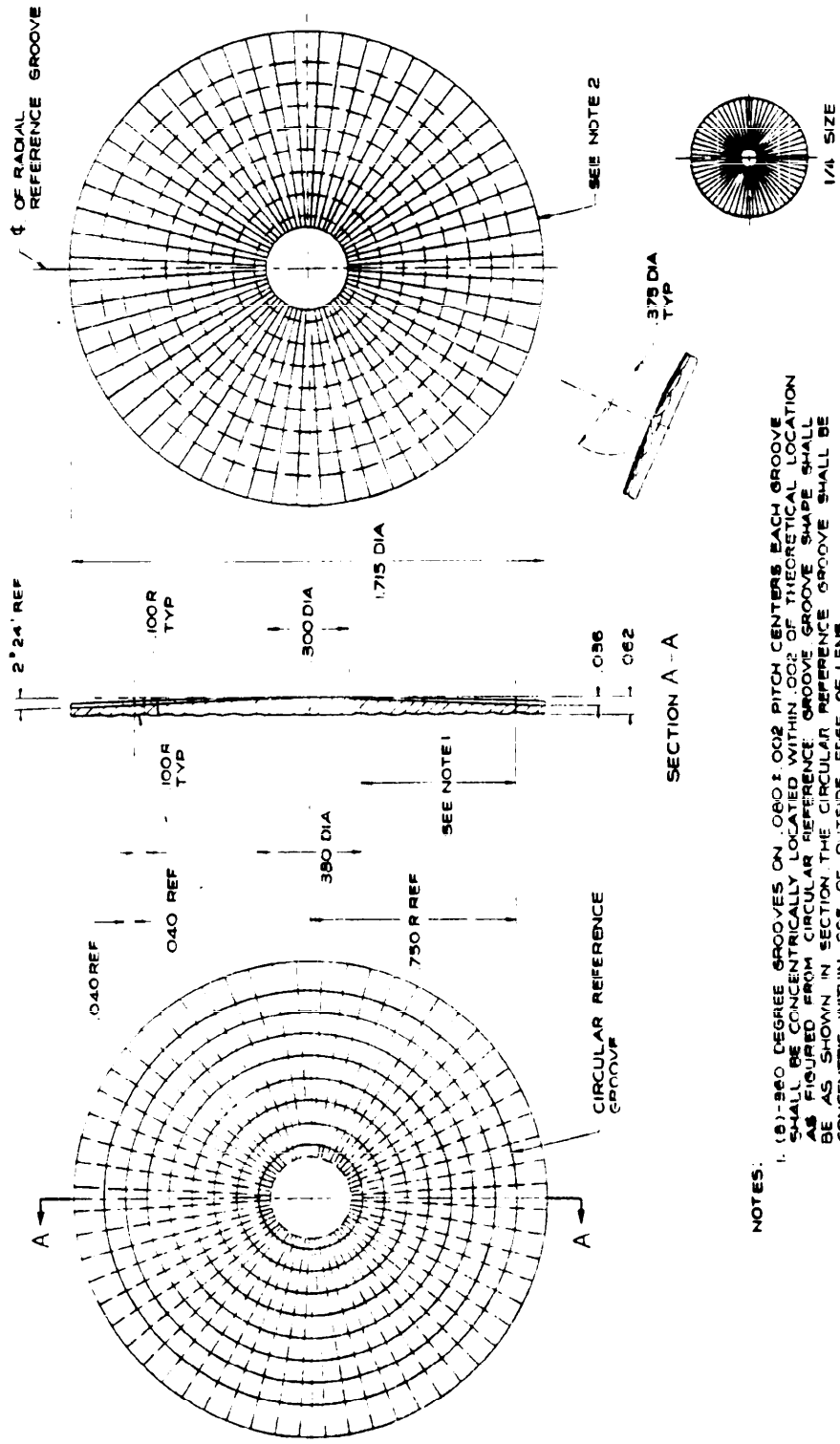

NOTES:

1. (8)-360 DEGREE GROOVES ON .080 ± .002 PITCH CENTERS EACH GROOVE SHALL BE CONCENTRICALLY LOCATED WITHIN .002 OF THEORETICAL LOCATION AS FIGURED FROM CIRCULAR REFERENCE GROOVE. GROOVE SHAPE SHALL BE AS SHOWN IN SECTION THE CIRCULAR REFERENCE GROOVE SHALL BE CONCENTRIC WITHIN .005 OF OUTSIDE EDGE OF LENS.
2. 60 RADIAL GROOVES ON 6°0' ± 0°15' CENTERS = 360°. EACH GROOVE SHALL BE LOCATED WITHIN 0°15' OF THEORETICAL ANGLE AS FIGURED FROM ℄ OF RADIAL REFERENCE GROOVE THE CENTER LINES OF THE RADIAL GROOVES SHALL PASS WITHIN .002 OF THE CIRCULAR REFERENCE GROOVE.
3. ALL DIMENSIONS ARE IN INCHES
4. TOLERANCES ARE: FRACTIONS ±
   DECIMALS ± .005
   ANGLES ±

FIGURE 14
LENS, DIFFUSION

DX-1999A

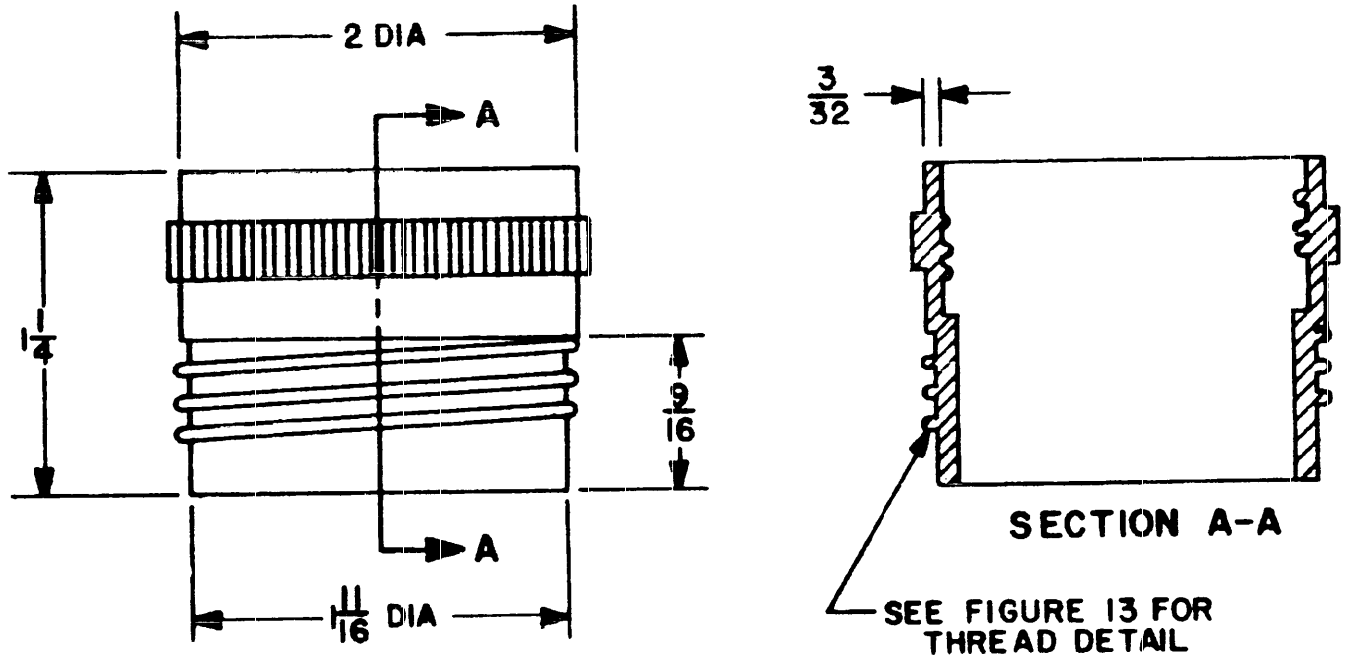

NOTES:
1. ALL DIMENSIONS ARE IN INCHES.
2. UNLESS OTHERWISE SPECIFIED FRACTIONAL DIMENSIONS ± 1/16.

FIGURE 15. Retainer, lens.

X-3237

INSTRUCTIONS: In a continuing effort to make our standardization documents better, the DoD provides this form for use in submitting comments and suggestions for improvements. All users of military standardization documents are invited to provide suggestions. This form may be detached, folded along the lines indicated, taped along the loose edge *(DO NOT STAPLE)*, and mailed. In block 5, be as specific as possible about particular problem areas such as wording which required interpretation, was too rigid, restrictive, loose, ambiguous, or was incompatible, and give proposed wording changes which would alleviate the problems. Enter in block 6 any remarks not related to a specific paragraph of the document. If block 7 is filled out, an acknowledgement will be mailed to you within 30 days to let you know that your comments were received and are being considered.

NOTE: This form may not be used to request copies of documents, nor to request waivers, deviations, or clarification of specification requirements on current contracts. Comments submitted on this form do not constitute or imply authorization to waive any portion of the referenced document*(s)* or to amend contractual requirements.

(Fold along this line)

(Fold along this line)

DEPARTMENT OF THE ARMY
USA Belvoir R&D Center
STRBE-DS
Fort Belvoir, VA 22060

NO POSTAGE NECESSARY IF MAILED IN THE UNITED STATES

OFFICIAL BUSINESS
PENALTY FOR PRIVATE USE $300

BUSINESS REPLY MAIL
FIRST CLASS PERMIT NO. 12062 WASHINGTON D. C.

POSTAGE WILL BE PAID BY THE DEPARTMENT OF THE ARMY

Commander
USA Belvoir R&D Center
STRBE-DS
Fort Belvoir, VA 22060

STANDARDIZATION DOCUMENT IMPROVEMENT PROPOSAL

(See Instructions – Reverse Side)

1. DOCUMENT NUMBER MIL-F-3747E	2. DOCUMENT TITLE Flashlights: Plastic Case, Tubular (Regular, Explosion-Proof, Explosion-Proof Heat Resistant, Traffic Directing, and Inspection-Light)
3a. NAME OF SUBMITTING ORGANIZATION	4. TYPE OF ORGANIZATION *(Mark one)* ☐ VENDOR ☐ USER ☐ MANUFACTURER ☐ OTHER *(Specify)*: _____
b. ADDRESS *(Street, City, State, ZIP Code)*	

5. PROBLEM AREAS

a. Paragraph Number and Wording:

b. Recommended Wording:

c. Reason/Rationale for Recommendation:

6. REMARKS

7a. NAME OF SUBMITTER *(Last, First, MI)* – Optional	b. WORK TELEPHONE NUMBER *(Include Area Code)* – Optional
c. MAILING ADDRESS *(Street, City, State, ZIP Code)* – Optional	8. DATE OF SUBMISSION *(YYMMDD)*

DD FORM 82 MAR 1426

PREVIOUS EDITION IS OBSOLETE.