INCH-POUND

MIL-F-24787/7(SH)
3 September 1993

MILITARY SPECIFICATION

FITTINGS, END, TYPES B AND BL, GASKET SEAL UNION, REUSABLE FOR FLEXIBLE HOSE ASSEMBLIES

This specification is approved for use by the Naval Sea Systems Command, Department of the Navy, and is available for use by all Departments and Agencies of the Department of Defense.

1. SCOPE

1.1 Scope. This specification covers reusable gasket seal union end fittings for use with wire or synthetic fiber reinforced rubber hose.

1.2 Classification. The gasket seal fittings shall be type B (straight nipple) and BL (90° elbow nipple). See MIL-F-24787, table III for identification of corresponding hose type (MIL-H-24135 and MIL-H-24136 specification sheet number) for each group number specified herein.

1.2.1 Obsolescent. The types B and BL gasket seal unions are for replacement purposes only and shall not be used in new construction.

2. APPLICABLE DOCUMENTS

2.1 Government documents.

2.1.1 Specifications, standards, and handbooks. The following specifications, standards, and handbooks form a part of this document to the extent specified herein. Unless otherwise specified, the issues of these documents are those listed in the issue of the Department of Defense Index of Specifications and Standards (DoDISS) and supplement thereto, cited in the solicitation (see 6.2).

Beneficial comments (recommendations, additions, deletions) and any pertinent data which may be of use in improving this document should be addressed to: Commander, SEA 03Q42, Naval Sea Systems Command, 2531 Jefferson Davis Hwy, Arlington, VA 22242-5160 by using the self-addressed Standardization Document Improvement Proposal (DD Form 1426) appearing at the end of this document or by letter.

AMSC N/A FSC 4730

SPECIFICATIONS

FEDERAL

QQ-N-281 - Nickel-Copper Alloy Bar, Rod, Sheet, Strip, Wire, Forgings, and Structural and Special Shaped Sections.

QQ-N-286 - Nickel-Copper-Aluminum Alloy, Wrought (UNS N05500).

QQ-N-288 - Nickel-Copper Alloy and Nickel-Copper-Silicon Alloy Castings.

MILITARY

MIL-F-24787 - Fittings, End, Reusable for Flexible Hose Assemblies, General Specification for.

MIL-T-1368 - Tube and Pipe, Nickel-Copper Alloy, Seamless and Welded.

MIL-T-16420 - Tube, Copper-Nickel Alloy, Seamless and Welded, (Copper Alloy Numbers 715 and 706).

MIL-H-24135 - Hose Synthetic Rubber, Wire Reinforced, for Flexible Hose Assemblies, General Specification for.

MIL-H-24136 - Hose, Synthetic Rubber, Synthetic Fiber Reinforced, for Flexible Hose Assemblies, General Specification for.

(Unless otherwise indicated, copies of the federal and military specifications, standards and handbooks are available from the Standardization Documents Order Desk, Building 4D, 700 Robbins Avenue, Philadelphia, PA 19111-5094.)

2.2 Non-Government publications. The following documents form a part of this document to the extent specified herein. Unless otherwise specified, the issues of the documents which are DoD adopted are those listed in the issue of DoDISS cited in the solicitation. Unless otherwise specified, the issues of the documents not listed in the DoDISS are the issues of the documents cited in the solicitation (see 6.2).

SOCIETY OF AUTOMOTIVE ENGINEERS (SAE)

AMS 6381 - Steel Tubing, Mechanical 0.95Cr - 0.20Mo. (0.38 - 0.43C (SAE 4140). (DoD adopted)

(Application for copies should be addressed to the Society of Automotive Engineers, 400 Commonwealth Drive, Warrendale, PA 15096.)

(Non-Government standards and other publications are normally available from the organizations which prepare or distribute the documents. These documents also may be available in or through libraries or other informational services.)

2.3 Order of precedence. In the event of a conflict between the text of this document and the references cited herein (except for related associated detail specifications, specification sheets, or MS standards), the text of this document takes precedence. Nothing in this document, however, supersedes applicable laws and regulations unless a specific exemption has been obtained.

3. REQUIREMENTS

3.1 Gasket seal union fittings furnished under this specification shall conform to the requirements of MIL-F-24787 and as specified herein.

3.1.1 Fitting availability. Types B and BL gasket seal union fittings are available in the groups and sizes indicated in table I.

TABLE I. Gasket seal union fitting by group and size.

Fitting size (hose dash no.)	Fitting group										
	I	II	III	IV	V	VI	VII	VIII	IX	X	XI
4	X										
6	X	X						X			
8	X	X						X			
12	X	X						X			
16	X	X	X			X		X			
20	X		X			X		X			
24	X		X			X		X			
32	X		X			X		X			

NOTE: X's denote where gasket seal union fittings are available by group and size.

3.2 Dimensions. Fitting dimensions shall be in accordance with figure 1 and the tables thereto.

3.3 Materials. Fitting materials shall be in accordance with figure 1 and the tables thereto.

4. QUALITY ASSURANCE PROVISIONS

4.1 Quality assurance provisions shall be in accordance with MIL-F-24787 and as specified herein.

4.1.1 Responsibility for compliance. All items shall meet all requirements of sections 3 and 5. The inspection set forth in this specification shall become a part of the contractor's overall inspection system or quality program. The absence of any inspection requirements in the specification shall not relieve the contractor of the responsibility of ensuring that all products or supplies submitted to the Government for acceptance comply with all requirements of the contract. Sampling inspection, as part of the manufacturing operations, is an acceptable practice to ascertain conformance to requirements, however, this does not authorize submission of known defective material, either indicated or actual, nor does it commit the Government to accept defective material.

4.2 Sampling for qualification testing.

4.2.1 End fittings. Qualification testing of end fittings shall consist of end fitting samples as specified in table II. For qualification testing, end fittings shall be attached to the appropriate hose indicated in table II.

4.2.1.1 Use on multiple hoses. Where end fittings are indicated for use on multiple hose associated detail specifications, the basic qualification shall be to the associated detail specification having the highest pressure rating. At least one hose sample shall be selected from each additional associated detail specification for the hydraulic impulse test.

TABLE II. End fitting samples required.

Group no.	Size hose (dash no.)	No of end fitting samples required	Appropriate hose military specification
I	-8 -32	8 10	MIL-H-24135/1,/5,/6 and /13
II	-8 -16	8 10	MIL-H-24135/2 and /8
III	-16 -32	8 10	MIL-H-24135/3
VI	-16 -32	8 10	MIL-H-24135/9

4.2.3 Hose qualification. Hose samples used for the qualification of fittings to this specification shall be qualified to the appropriate associated detail specification shall be not less than 15 inches long. Where there are no previously qualified hose, the prospective fitting supplier shall work together with a prospective hose supplier to qualify their respective products. (The hose supplier and fitting supplier may be a single source).

4.2.3.1 The quantity of hose samples (15 inch minimum length) required shall be in accordance with table III.

TABLE III. Hose samples required.

Hose size 1/ (table II)	No. of hose samples to be provided
Smallest	4
Largest	5

NOTE: Hose samples are to be from the appropriate associated detail specification per table II.

4.2.4 Hose and end fitting mix. Where there are two or more qualified suppliers of hose to the associated detail specification required for hose samples for the group being qualified, the hose mix shall be in accordance with table IV. Where there is only one previously qualified supplier, the "previously qualified" samples shall come from that supplier.

TABLE IV. Hose and fitting mix when there is one or more qualified suppliers for combined qualification test.

One approved source				
Sample size (dash no.) 4/	No. of hose samples to be provided 1/		No. of end fittings to be provided	
	Qualifier 2/	Appvd 3/ source	Qualifier 2/	Appvd 3/ source
Smallest	2	2	4	4
Largest	3	2	5	5

TABLE IV. Hose and fitting mix when there is one or more qualified suppliers for combined qualification test - Continued.

Two or more approved sources			
Sample size (dash no.)	No. of fittings to be provided by		
	Qualifier 2/	Approved 3/ source #1	Approved 3/ source #2
Smallest Largest	4 5	2 3	2 2
Sample size (dash no.)	**Number of hoses to be provided by**		
	Qualifier 2/	**Approved 3/ source #1**	**Approved 3/ source #2**
Smallest **Largest**	2 3	1 1	1 1

(Hose samples shall be not less than 15 inches in length and shall be coupled on one end with the fitting being submitted for qualification and on the other end with a previously qualified end fitting.)

NOTES:

1. See table II for appropriate hose sample.
2. Offeror of hose and fittings or fittings to be qualified.
3. Approved source - Previously qualified fitting and hose, or fitting or hose.
4. Satisfactory completion of qualification testing of the samples selected in accordance with tables II, III and IV will qualify the manufacturer for all sizes in this associated detail specification for the group qualified. Qualification will be extended to all fittings under the same group no. under different associated detail specifications.

4.2.5 No previously qualified source. Where there is no previously qualified source, all samples for qualification shall come from the prospective qualifier(s).

4.2.6 Sequence of tests on sample hose assemblies shall be as specified in table V. If hoses are being qualified at the same time, the sequence of tests shall be in accordance with the applicable associated detail specification for the hose being qualified. Whichever sequence is used, only those tests in table V below shall apply to end fittings.

TABLE V. Sequence of qualification tests on sample assemblies.

Test sequence (see MIL-F-XX216)	Assembly sample numbers								
	Smallest size				Largest size				
	1	2	3	4	5	6	7	8	9
Proof pressure (see 4.6.1)	X	X	X	X	X	X	X	X	X
Hydraulic fluid circulation (see 4.6.2)		X					X		
Impulse test (see 4.6.3) 1/				X	X		X		
Burst test (see 4.6.4)	X		X			X		X	

1/ Where the end fitting group being qualified is used on multiple hoses (see table II), qualification will be extended to the use of the fitting on additional hoses provided at least one sample hose assembly from each of the other group(s) is made up and submitted to the hydraulic impulse test.

5. PACKAGING

5.1 Packaging requirements shall be in accordance with MIL-F-24787.

6. NOTES

(This section contains information of a general or explanatory nature that may be helpful, but is not mandatory.)

6.1 Intended use. End fittings to this specification are intended for use in shipboard or shore to ship piping systems where pressures do not exceed the flange rated working pressure, and temperatures do not exceed that of the applicable hose.

6.2 Acquisition requirements. Acquisition documents should specify the following:

(a) Title number and date of this specification sheet.
(b) Fitting type designation.
(c) Issue of DODISS to be cited in the solicitation, and if required, the specific issue of individual documents referenced (see 2.1 and 2.1.1).
(d) Fitting group designation, see table I.
(e) Fitting size, hose X pipe or tube.
(f) Quantity.

6.3 Subject term (key word) listing.

Wire
Synthetic fiber

Preparing activity:
Navy - SH
(Project 4730-N086-7)

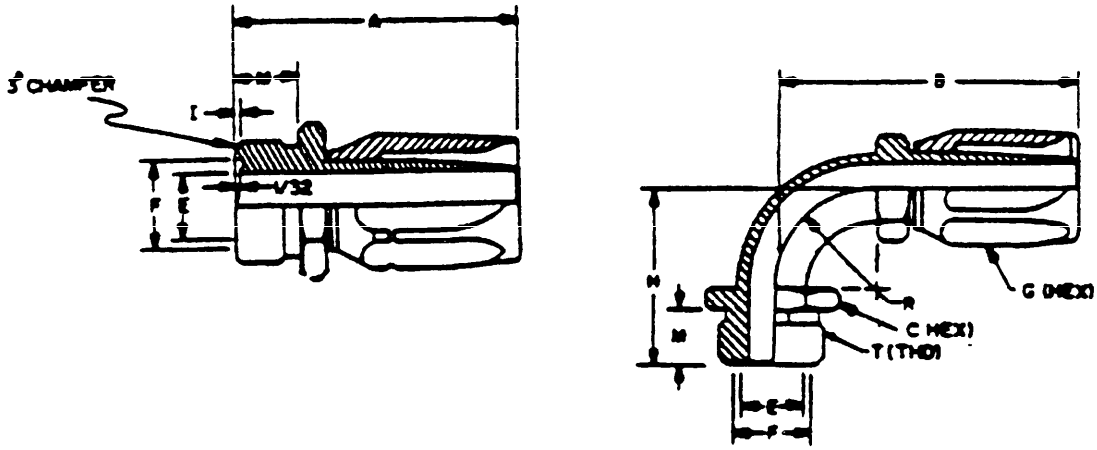

TYPE B AND BL-----SOLID SOCKET

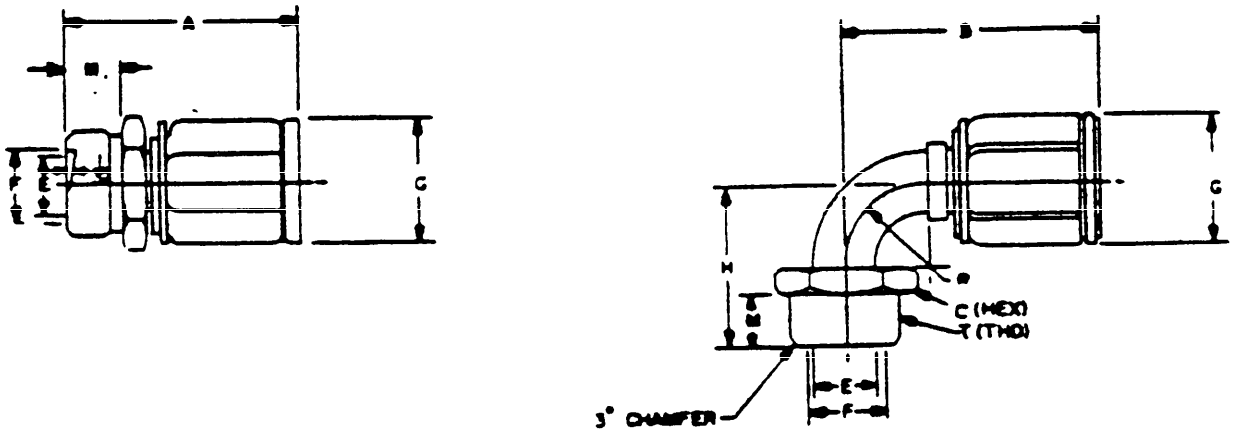

TYPE B AND BL-----RING AND BAND

FIGURE 1. Type B and BL end fittings.

MIL-E-XX216/7(SH)

TABLES FOR SOLID SOCKET FITTINGS

Hose (dash no.)	Tube size (nom)	T Thread Cl-2B	A max	C nom	G max	M ref	B max	H max	R min	E +/- 0.005	F +/- 0.005
-4	1/8	7/8-12 UN	3.00	0.94	1.00	0.81	3.55	2.00	0.38	0.406	0.534
-6	1/4	1-1/8-12 UNF	3.25	1.25	1.25	0.88	3.55	2.25	0.50	0.406	0.641
-6	3/8	1-1/4-12 UNF	3.25	1.38	1.25	0.88	X	X	X	0.547	0.797
-8	3/8	1-1/4-12 UNF	3.50	1.38	1.50	0.88	3.81	2.50	0.75	0.547	0.797
-12	3/8	1-1/4-12 UNF	3.75	1.38	1.75	0.88	X	X	X	0.547	0.797
-12	1/2	1-1/2-12 UNF	4.00	1.63	1.75	0.94	4.75	3.25	1.25	0.672	1.000
-16	1/2	1-1/2-12 UNF	4.25	1.63	2.25	0.94	X	X	X	0.672	1.000
-16	3/4	1-3/4-12 UN	4.50	1.88	2.25	1.00	5.75	3.75	1.50	0.875	1.188
-16	1	2-1/8-12 UN	4.75	2.25	2.25	1.12	X	X	X	1.094	1.375
-16	1-1/4	2-5/8-12 UN	5.00	2.75	2.25	1.25	X	X	X	1.344	1.750
-20	1	2-1/8-12 UN	5.25	2.25	2.75	1.12	6.75	4.25	1.75	1.094	1.375
-20	1-1/4	2-5/8-12 UN	5.50	2.75	2.75	1.25	X	X	X	1.344	1.750
-24	1-1/4	2-5/8-12 UN	5.25	2.75	3.00	1.25	7.00	5.00	2.00	1.344	1.750
-32	1-1/2	2-7/8-12 UN	6.00	3.00	3.50	1.31	8.00	5.75	2.50	1.656	2.094
-32	2	3-5/8-12 UN	8.00	3.75	3.50	1.38	8.25	6.00	2.50	1.938	2.375

NOTES:

1. Dimensions are in inches.
2. Fitting assembly material shall conform to QQ-N-281 or QQ-N-286.
3. The elbow material shall conform to MIL-T-1368 for sizes -4 through -12 and MIL-T-16420 for sizes -16 through -32.
4. Alternative material for sockets shall conform to QQ-N-288.
5. The type B and BL fitting is for replacement purposes only and is not to be used on new construction.
6. Caution-Only the dimensions shown above are identical for groups I and II fittings. Internal dimensions will vary because they are intended for different hoses.

TABLE VII. Dimensions for group III solid socket types B and BL (-16) size only).

Hose (dash no.)	Tube size (nom)	T Thread CL-2B	A max	C nom	G max	M ref	B max	H max	R ref	E +/- 0.005	F +/- 0.005
-16	1	2-1/8-12 UN	5.40	1.25	2.00	1.12	6.50	3.25	1.50	1.093	1.375

NOTES:

1. Dimensions are in inches.
2. Fitting assembly materials shall conform to QQ-N-281 or QQ-N-286.
3. The material for the tube elbow shall conform to MIL-T-16420.
4. Alternative material for the socket shall conform to QQ-N-288.

TABLE VIII. Dimensions for group III, ring and band socket, types B and BL.

Hose (dash no.)	Tube size (nom)	T thread CL-2B	A max	C nom	G max	M ref	B max	H max	R min	E +/- 0.005	F +/- 0.005
-20	1	2-1/8-12 UN	6.25	2.25	4.00	1.12	X	X	X	1.093	1.375
-20	1-1/4	2-5/8-12 UN	6.50	2.75	4.00	1.25	7.00	4.75	1.75	1.344	1.750
-24	1-1/4	2-5/8-12 UN	7.00	2.75	4.25	1.25	X	X	X	1.344	1.750
-24	1-1/2	2-7/8-12 UN	7.25	3.00	4.25	1.31	7.75	5.25	2.00	1.656	2.094
-32	2	3-5/8-12 UN	8.00	3.75	5.25	1.38	8.00	6.00	2.50	1.937	2.375

NOTES:

1. Dimensions are in inches.
2. Fitting assembly materials for the hose nipple shall conform to QQ-N-281 or QQ-N-286.
3. Socket may be one-piece or multiple segment design, not exceeding the envelope dimensions.
4. Socket alternate materials shall conform to QQ-N-288 or steel conforming to AISI 1035 (segments) or SAE-AISI 4140 (ring and band) in accordance with AMS 6381 as applicable.
5. The 90° tube elbow shall conform to MIL-T-16420.

TABLE IX. Dimensions for group VI, ring and band socket, types B and BL.

Hose (dash no.)	Tube size (nom)	T thread CL-2B	A max	C nom	G max	M ref	B max	H max	R ref	E +/- 0.005	F +/- 0.005
-16	1	2-1/8-12 UN	5.42	2.25	2.16	1.12	6.44	3.35	1.50	1.093	1.375
-20	1	2-1/8-12 UN	5.36	2.25	2.88	1.12	X	X	X	1.093	1.375
-20	1-1/4	2-5/8-12 UN	5.61	2.75	2.88	1.25	6.44	3.83	1.75	1.344	1.750
-24	1-1/4	2-5/8-12 UN	5.92	2.75	3.16	1.25	X	X	X	1.344	1.750
-24	1-1/2	2-7/8-12 UN	6.11	3.00	3.16	1.31	7.25	4.52	2.00	1.656	2.094
-32	2	3-5/8-12 UN	6.61	3.75	3.75	1.38	8.95	5.57	3.00	1.937	2.375

NOTES:

1. Dimensions are in inches.
2. Fitting assembly materials for the hose nipple shall conform to QQ-N-281 or QQ-N-286.
3. Sockets for sizes -20 and larger may be one-piece or multiple segment design, not exceeding the envelope dimensions. Sockets for size -16 shall be one-piece design.
4. Materials for the sockets shall be QQ-N-281, QQ-N-286, QQ-N-288 or, for sizes -20 and larger steel conforming to AISI-SAE 4140 in accordance with AMS 6381, as applicable.
5. The 90° elbow tubing for all sizes shall conform to MIL-T-16420.

STANDARDIZATION DOCUMENT IMPROVEMENT PROPOSAL

INSTRUCTIONS

1. The preparing activity must complete blocks 1, 2, 3, and 8. In block 1, both the comment number and revision letter should be given.

2. The submitter of this form must complete blocks 4, 5, 6, and 7.

3. The preparing activity must provide a reply within 30 days from receipt of this form.

NOTE: This form may not be used to request copies of documents, nor to request waivers, or clarification of requirements on current contracts. Comments submitted on this form do not constitute or imply authorization to waive any portion of the referenced document(s) or to amend contractual requirements.

I RECOMMEND A CHANGE:	1. DOCUMENT NUMBER MIL-F-24787/7(SH)	2. DOCUMENT DATE (YYMMDD) 930903

3. DOCUMENT TITLE
FITTINGS, END, TYPES B AND BL, GASKET SEAL UNION, REUSABLE FOR FLEXIBLE HOSE ASSEMBLIES

4. NATURE OF CHANGE (identity paragraph number and include proposed rewrite, if possible. Attach extra sheets as needed.)

5. REASON FOR RECOMMENDATION

6. SUBMITTER

A. NAME (Last, First, Middle Initial)	b. ORGANIZATION	
c. ADDRESS (Include Zip Code)	d. TELEPHONE (Include Area Code) (1) Commercial (2) DSN (if applicable)	7. DATE SUBMITTED (YYMMDD)

8. PREPARING ACTIVITY

A. NAME Technical Point of Contact (TPOC) MR. CARL BANKS, SEA 03Y23 ADDRESS ALL CORRESPONDENCE AS FOLLOWS:	b. TELEPHONE (Include Area Code) (1) Commercial: DSN: TPOC: 703-602-0367 8-332-0367
c. ADDRESS (Include Zip Code) COMMANDER, NAVAL SEA SYSTEMS COMMAND ATTN: SEA 03Q42 2531 JEFFERSON DAVIS HIGHWAY ARLINGTON, VA 22242-5160	IF YOU DO NOT RECEIVE A REPLY WITHIN 45 DAYS, CONTACT: Defense Quality and Standardization Office 5203 Leesburg Pike, Suite 1403 Falls Church, VA 22041-3466 Telephone 703-756-2340 DSN 289-2340