Downloaded from http://www.everyspec.com

INCH-POUND

MIL-F-24755(SH)
27 December 1990

# MILITARY SPECIFICATION

# FANS, VANEAXIAL, HIGH PRESSURE, NAVAL SHIPBOARD

*This specification is approved for use by the Naval Sea Systems Command, Department of the Navy, and is available for use by all departments and agencies of the Department of Defense.*

## 1. SCOPE

**1.1 Scope.** This specification covers high pressure vaneaxial fans used in collective protective systems for Naval shipboard ventilation systems.

**1.2 Classification.** Fans shall be of the following types, as specified (see 3.7.1 and 6.2):

| | |
|---|---|
| Type A | Vaneaxial, fixed, Navy standard (Hi-shock) |
| Type X-A | Vaneaxial, fixed, Navy standard (service C motor) |

## 2. APPLICABLE DOCUMENTS

**2.1 Government documents.**

**2.1.1 Specifications and standards.** The following specifications and standards form a part of this document to the extent specified herein. Unless otherwise specified, the issues of these documents are those listed in the issue of the Department of Defense Index of Specifications and Standards (DODISS) and supplement thereto, cited in the solicitation (see 6.2).

Beneficial comments (recommendations, additions, deletions) and any pertinent data which may be of use in improving this document should be addressed to: Commander, Naval Sea Systems Command, SEA 55Z3, Department of the Navy, Washington, DC 20362-5101 by using the self-addressed Standardization Document Improvement Proposal (DD Form 1426) appearing at the end of this document or by letter.

AMSC N/A FSC 4140

**DISTRIBUTION STATEMENT A.** Approved for public release; distribution is unlimited.

Downloaded from http://www.everyspec.com



SPECIFICATIONS

FEDERAL

| | |
|---|---|
| FF-B-171 | Bearings, Ball, Annular (General Purpose) |
| FF-N-836 | Nut, Square, Hexagon Cap, Slotted, Castle Knurled, Welding and Single Ball Seat |
| FF-S-85 | Screw, Cap, Slotted and Hexagon Head |
| FF-S-86 | Screw, Cap, Socket Head |
| FF-S-92 | Screw, Mach, Slotted, Cross Recessed or Hexagon Head |
| FF-S-200 | Setcrews: Hexagon Socket and Spline Socket, Headless |
| FF-W-84 | Washer, Lock (Spring) |
| FF-W-92 | Washer, Flat, (Plain) |
| TT-P-664 | Primer Coating, Alkyd, Corrosion-Inhibiting, Lead and Chromate Free, Voc-Compliant |
| TT-V-119 | Varnish, Spar, Phenolic-Resin |
| QQ-A-601 | Aluminum Alloy Sand Castings |

MILITARY

| | |
|---|---|
| MIL-P-116 | Preservation, Methods of |
| MIL-S-901 | Shock Tests HI (High Impact); Shipboard Machinery, Equipment, and Systems, Requirements for |
| MIL-E-917 | Electric Power Equipment, Basic Requirements (Naval Shipboard Use) |
| MIL-S-1222 | Studs, Bolts, Hex Cap Screws, Socket Head Cap Screws and Nuts |
| MIL-A-8625 | Anodic Coatings, for Aluminum and Aluminum Alloys |
| DOD-P-15328 | Primer (Wash), Pretreatment (Formula No. 117 for Metals), (Metric) |
| MIL-C-16173 | Corrosion Preventive Compound, Solvent Cutback, Cold-Application |
| MIL-E-16298 | Electric Machines Having Rotating Parts, Accessories, and Associated Support Items: Packaging of |
| MIL-M-17060 | Motors, 60-Hertz, Alternating Current, Integral Horsepower, Shipboard Use |
| MIL-B-17931 | Bearings, Ball, Annular, for Quiet Operation |
| MIL-P-24441 | Paint, Epoxy – Polyamide, General Specification for |

Downloaded from http://www.everyspec.com



| | |
|---|---|
| DOD-G-24508 | Grease, High Performance, Multipurpose (Metric) |
| MIL-C-81751 | Coating, Metallic – Ceramic |

STANDARDS
MILITARY

| | |
|---|---|
| MIL-STD-167-1 | Mechanical Vibrations of Shipboard Equipment, (Type I – Environmental and Type II – Internally Excited) |
| MIL-STD-278 | Welding and Casting Standard |
| MIL-STD-740-2 | Structureborne Vibratory Acceleration Measurements and Acceptance Criteria of Shipboard Equipment |
| MIL-STD-1399 Section 300 | Interface Standard for Shipboard Systems, Electric Power, Alternating Current (Metric) |
| MIL-STD-1472 | Human Engineering Design Criteria for Military Systems, Equipment and Facilities |

(Unless otherwise indicated, copies of federal and military specifications and standards are available from the Standardization Documents Order Desk, Building 4D, 700 Robbins Avenue, Philadelphia, PA 19111-5094.)

**2.1.2 Other Government drawing and publication.** The following other Government drawing and publication forms a part of this document to the extent specified herein. Unless otherwise specified, the issues are those cited in the solicitation.

DRAWING

NAVAL SEA SYSTEMS COMMAND (NAVSEA)

| | |
|---|---|
| 803-6397248 | Fans Vaneaxial High Pressure |

(Application for copies should be addressed to: Commander, Portsmouth Naval Shipyard, Naval Engineering Drawing Support Activity, Code 202.2, Portsmouth, NH 03804-5000)

PUBLICATION

NAVSEA

| | |
|---|---|
| 0900-LP-003-8000 | Surface Inspection Methods for Metals |

(Application for copies should be addressed to the Standardization Documents Order Desk, Building 4D, 700 Robbins Avenue, Philadelphia, PA 19111-5094.)

Downloaded from http://www.everyspec.com



**2.2 Non-Government publications.** The following documents form a part of this document to the extent specified herein. Unless otherwise specified, the issues of the documents which are DOD adopted are those listed in the issue of the DODISS cited in the solicitation. Unless otherwise specified, the issues of documents not listed in the DODISS are the issues of the documents cited in the solicitation (see 6.2).

AMERICAN SOCIETY FOR TESTING AND MATERIALS (ASTM)

| | |
|---|---|
| A 123 | Standard Specification for Zinc (Hot-Dip Galvanized) Coatings on Iron and Steel Products |
| A 153 | Standard Specification for Zinc Coating (Hot-Dip) on Iron and Steel Hardware; (DOD adopted) |
| B 6 | Standard Specification for Zinc |
| B 26 | Standard Specification for Aluminum–Alloy Sand Castings; (DOD adopted) |
| B 209 | Standard Specification for Aluminum and Aluminum–Alloy Sheet and Plate; (DOD adopted) |
| B 211 | Standard Specification for Aluminum and Aluminum-Alloy Bar, Rod, and Wire; (DOD adopted) |
| B 633 | Electrodeposited Coatings of Zinc on Iron and Steel; (DOD adopted) |
| D 2092 | Standard Practice for Preparation of Zinc-Coated (Galvanized) Steel Surfaces for Painting |

(Applications for copies should be addressed to the American Society for Testing and Materials, 1916 Race Street, Philadelphia, PA 19103.)

AIR MOVING AND CONDITIONING ASSOCIATION (AMCA)

| | |
|---|---|
| 210 | Test Code for Air Moving Devices |
| 300 | Test Code for Sound Rating |

(Application for copies should be addressed to the Air Moving and Conditioning Association, 30 West University Drive, Arlington Heights, IL 60004.)

INSTITUTE OF ELECTRICAL AND ELECTRONICS ENGINEERS (IEEE)

| | |
|---|---|
| 112 | Standard Test Procedure for Polyphase Induction Motors and Generators |
| 429 | Standard Test Procedure for the Evaluation of Sealed Insulation Systems for AC Electric Machinery Employing Form – Wound Stator Coils |

Downloaded from http://www.everyspec.com



(Application for copies should be addressed to the Institute of Electrical and Electronics Engineers, 345 East 47 Street, New York, NY 10017.)

(Non-Government standards and other publications are normally available from the organizations that prepare or distribute the documents. These documents also may be available in or through libraries or other informational services.)

**2.3 Order of precedence.** In the event of a conflict between the text of this document and the references cited herein, the text of this document takes precedence. Nothing in this document, however, supersedes applicable laws and regulations unless a specific exemption has been obtained.

## 3. REQUIREMENTS

**3.1 First article.** When specified (see 6.2), a sample shall be subjected to first article inspection (see 6.4) in accordance with 4.3.

**3.2 Material.**

**3.2.1 General.** It is the intent of this specification that commercial materials be permitted for fan parts except castings. When not identified by Government specifications, steel and aluminum materials, other than castings, shall be identified by American Iron and Steel Institute number or range of numbers (for example, AISI 1008-1020) or by Aluminum Association number (for example, 5052). Chemical or mechanical analysis is required only for castings.

**3.2.2 Steel plate.** Parts fabricated of steel plate, including castings, shall be of low carbon or medium steel having a surface smoothness suitable for electro-plating.

**3.2.3 Aluminum alloy.** Aluminum alloy shall conform to the requirements in table I.

TABLE I. *Aluminum alloy materials.*

| Material | Alloy | Requirement |
|---|---|---|
| Plate and sheet | 5086, quarter hard[1]<br>5052, quarter hard<br>6061, T4 or T6 | ASTM B 209, H32<br>ASTM B 209, H32<br>ASTM B 209, T4 or T6 |
| Bars, shapes, rod, | 5052, quarter hard | ASTM B 211, H32; alloy 5052, H32 |
| Sand castings | – | ASTM B 26, alloys 356-T6, 710.0, 712.0, T1, or 713.0 |

[1]Preferred for welded assemblies.

Downloaded from http://www.everyspec.com



**3.2.4 Cast iron.** Cast iron shall not be used in any part of the fans. Cast iron shall not be used in motors.

**3.2.5 Hardware.** Hardware shall conform to commercial standards. The following specifications are listed for guidance:

Cap screws, FF-S-85 or FF-S-86, as applicable
Slotted-head machine screws, FF-S-92
Hexagon-sockets, headless set screws, FF-S-200
Bolts, MIL-S-1222
Nuts, FF-S-836
Lockwashers, FF-W-84
Plain washers, FF-W-92.

**3.2.5.1 Fittings.** Fittings shall be of carbon steel, electroplated with zinc to a minimum thickness of 0.0002 inch in accordance with ASTM B 633, class FE/ZN25. High strength, above grade 5, fittings shall not be permitted.

**3.2.6 Dissimilar metals.**

**3.2.6.1 Fittings.** Copper or brass fittings shall be insulated from aluminum or aluminum alloys. Asbestos paper or similar absorbent material shall not be used in contact with aluminum or aluminum alloys.

**3.2.6.2 Faying surfaces.** Faying surfaces of aluminum or aluminum alloy with like or dissimilar metals shall be painted with one coat of epoxy primer, MIL-P-24441, formula 150 and a top coat of MIL-P-24441, formula 151 before assembly. Total minimum dry film thickness for each coating shall be 2 mils.

**3.2.6.3 Tapped holes.** Tapped holes in aluminum shall be avoided, when there is no practical alternative, the thread shall be fitted with a 300-series corrosion-resistant steel insert. The thread of the screw shall be coated upon assembly with ceramic metallic coating in accordance with MIL-C-81751. Any departures and non-use of corrosion-resistant threaded inserts shall be approved on a case basis.

**3.2.7 Recovered material.** Unless otherwise specified herein, all equipment, material, and articles incorporated in the products covered by this specification shall be new and may be fabricated using materials produced from recovered materials to the maximum extent practicable without jeopardizing the intended use. The term "recovered materials" means materials which have been collected or recovered from solid waste and reprocessed to become a source of raw materials, as opposed to virgin raw materials. None of the above shall be interpreted to mean that the use of used or rebuilt products is allowed under this specification unless otherwise specifically specified.

Downloaded from http://www.everyspec.com



**3.3 Welding and allied processes.** All welding and allied processes shall conform to MIL-STD-278, class M, except that only visual inspection of welds is required.

**3.3.1 Weld defects.** Weld defects that exceed the parameters established by NAVSHIPS 0900-LP-003-8000 shall be corrected through:

a. *Weld rework* – a procedure that will bring the part into total compliance with the drawing and specification requirements and does not diminish the thickness of the parent metal by more than 10 percent and does not effect the parent metal surface by more than 1/32 inch for 15 percent of the weld length or 12 inches whichever is the least. Rework actions may be completed at the discretion of the manufacturer.

b. *Weld repair* – repairs, to a Government-approved procedure, are required any time any defects exceed the rework limits above. A repair action, if successfully completed, will create a serviceable yet not fully conforming unit. Cracks shall be repaired in accordance with 4.5.2. Weld repairs shall be inspected in accordance with MIL-STD-278.

**3.4 Corrosion protection.** Brass, copper, 300-series corrosion-resisting steel, nickel-copper alloy, and galvanized steel are considered corrosion-resisting materials for this application. When the corrosion-resistance of the 300-series corrosion-resisting steel is degraded by fabrication processes, it shall be restored by heat treatment.

**3.4.1 Plating of corrodible materials.** After all welding, drilling, and machining operations have been completed, steel assemblies, aluminum alloys or parts fabricated from other than corrosion-resisting materials listed in 3.4 shall be plated by one of the following methods:

| Process | Plating specification | Class |
|---|---|---|
| Zinc electroplating | ASTM B 633 | FE/ZN25 |
| Zinc hot-dip | ASTM A 153 | B |

**3.4.1.1 Plating of disassembly parts.** Parts which can be disassembled shall be plated separately. Machining of the plating will be permitted only as necessary for proper mating of parts; and when the plating is removed from an area, that area shall be coated in accordance with ASTM B 633, class FE/ZN25. Parts shall be cleaned and painted in accordance with 3.5.

**3.5 Surface cleaning and painting.**

**3.5.1 Cleaning of aluminum alloy surfaces.** Wherever practicable, cleaning of aluminum alloy shall be done prior to assembly of parts. Cleaning before assembly shall be accomplished by immersing the part in, or swabbing with a cleaner consisting of dilute water solution of phosphoric acid or organic solvents. The solution temperature shall be approximately 70 degrees Fahrenheit

Downloaded from http://www.everyspec.com



(°F). The solution shall remain in contact with the metal for 5 minutes. Residual solution shall be removed with clear water followed by hot water until no trace of acid is detected. As an alternate method, after assembly, parts may be cleaned with a suitable solvent.

3.5.1.1 **Sandblasting.** Light sandblasting, following the use of the above solvents, is permissible for producing a good adhering surface for paint, provided care is exercised to control the force and direction of the blast so as not to distort or damage the material.

3.5.1.2 **Welded parts.** Welded parts shall have all traces of flux removed before painting. This may be accomplished by brushing the welds while immersed in boiling water. For inaccessible welds, the part may be cleaned by immersing in a cold solution of 10 percent sulfuric acid for 30 minutes, or a 5 percent solution of sulfuric acid held at 150 °F for 10 minutes. The acid shall contact both the inside and outside surfaces. The acid treatments shall be followed by a thorough rinse in clean, warm water until no trace of acid is detected. Residual flux may be detected by leaching the surface with distilled water, and adding a few drops of 5 percent silver nitrate solution to the leach. A white precipitate indicates the presence of flux.

3.5.2 **Cleaning of galvanized surfaces.** All zinc-coated surfaces shall be treated with a cleaner consisting of phosphates, phosphoric acid, solvents and wetting agents to enable the surface to be coated with a thin phosphate coating. Where the galvanized material has not been acquired in the treated condition the solution shall be applied to the galvanized surface with a large brush and allowed to act 1 minute or more. The surface shall then be washed thoroughly with cold water, then hot water, and when dry, the primer shall be applied. Care shall be taken to minimize handling the surface following the coating and prior to the application of the primer.

3.5.3 **Cleaning of miscellaneous metals.** Corrosion-resisting steel, nickel copper alloy, copper and brass surfaces that are to be painted shall be cleaned with nonflammable solvent. Welds shall be brushed with corrosion-resisting metal wire brushes.

3.5.4 **Painting.** All exposed surfaces of fan impellers, interior surfaces of fan casings, exposed surfaces of all parts in the air stream, exterior surfaces of motors and exterior surfaces of fan casing and conduit boxes not previously painted shall be painted in accordance with 3.2.6.2, or in accordance with anodizing process per MIL-A-8625, type II, class 1, nominal thickness 0.0003 inch.

3.6 **Vibration and balance.** Fan-motor units shall be designed such that no damage will occur or malfunction be caused by the environmental vibrations specified in MIL-STD-167-1 (see 4.6.4). Fan-motor units shall be in static and dynamic balance. The vibration amplitude shall not exceed the limits for type II bearing vibration as specified in MIL-STD-167-1 (see 4.6.4.1).

3.7 **Identification.**

3.7.1 **Fan identification code.** The size and characteristics of Navy standard high pressure fan-motor units shall be designated by a code formed by alternate letters and figures arranged in accordance with table II, as follows:

Downloaded from http://www.everyspec.com



TABLE II. *Fan identification code*[1].

| Symbol sequence | Characteristics | Code | Meaning |
|---|---|---|---|
| 1 (letter) | Type of fan | A | Vaneaxial |
| 2 (figure) | Fan size | for size code see table III | Nominal $ft^3$/min of standard air |
| 3 (letter) | Type of current | A | Ac |
| 4 (figure) | Voltage and phase | 4 | 440 volts, 3 phase 60 Hz ac |
| 5 (letter) | Motor enclosure | W | Spray tight |
| 6 (figure) | Maximum ambient temperature | 6 | 65 °C |
| 7 (letter) | Thermal protection | TP | – |

[1]For example, A101A4W6-TP represents a type A, nominal 1200 cubic feet per minute ($ft^3$/min) vaneaxial fan at 14-inch water gauge driven by a 440-volt (V), 60-hertz (Hz), 3 phase, alternating current (ac) spraytight, 65 degrees Celsius (°C), ambient temperature, thermal protection Navy service A motor.

**3.7.2 Identification plates.** Identification plates for fans having steel casings shall be of corrosion-resistant steel plate and shall be attached with corrosion-resistant steel rivets; those for fans having aluminum casings shall be of aluminum alloy, attached with aluminum alloy rivets. When attaching the rivets to the fan casing, commercial seal shall be applied to prevent air leakage or pressure loss. The background of the plate shall be etched and filled with black enamel, and characters shall be raised and unpainted, except that the serial number shall be depressed in the metal by means of stamping. Plates for all fans shall conform to figure 1. A duplicate motor identification plate shall be installed on the outside of the fan casing. This plate and the fan plate shall be located in the line axially with the conduit box or cable entrance. If there is insufficient space on the casing without drilling through the fan race, the motor plate shall be located adjacent circumferentially to the fan plate. It is acceptable to combine the fan motor date in a single plate.

**3.8 Design requirements and construction.** The design and construction of the fans shall be in accordance with the requirements specified in 3.8.1 through 3.8.5.3 (see 6.3 and appendix A).

3.8.1 General.

3.8.1.1 **Aerodynamic design parameters.** The quantities of blades and vanes shall be chosen to avoid interacting frequencies within the audible range. The axial distance between blades and vanes shall be chosen with minimum noise amplitude as a prime consideration. The passing angle between a blade trailing edge and a vane leading edge shall be at least 10 degrees. The maximum blade tip clearance (radial clearance) shall not exceed 1/4 of 1 percent of the casing minimum inside diameter (see 4.6.10).

Downloaded from http://www.everyspec.com



**3.8.1.2 High impact shock resistance.** The fan-motor units shall pass the shock test specified in MIL-S-901 for grade A, class 1 equipment (see 4.6.7).

**3.8.1.3 Interchangeability.** In no case shall parts be physically interchangeable or reversible unless such parts are also interchangeable or reversible with regard to function, performance, and strength.

**3.8.1.4 Operating life.** The equipment shall have an operating life of at least 223,800 hours (equivalent to approximately 30 years of ship operation). Any parts identified as planned replacement parts shall have an operating life, prior to replacement, of approximately 37,300 hours (equivalent to approximately 5 years of ship operation).

**3.8.1.5 Human engineering.** Human engineering design criteria and principles shall be applied in the design of the fan so as to achieve safe, reliable, and effective performance by the operator and maintenance personnel and to optimize personnel skill requirements. MIL-STD-1472 shall be utilized as a guideline in applying human engineering design criteria for the fan-motor unit.

**3.8.1.6 Configuration.** Fans and motors shall be suitable for operation in any position on shipboard including vertical (with fan impeller either up or down), horizontal (parallel to ships centerline or athwartship), or inclined. Each fan-motor unit shall be complete assembly.

**3.8.1.7 Sizes.** Sizes of vaneaxial high pressure fans shall be limited to those listed in table III.

TABLE III. *Fan performance*[1].

| Fan size code | Diam (in) | Length (in) | Vol ($ft^3$/min) | TP in WG[2] | Vol ($ft^3$/min) | TP in WG |
|---|---|---|---|---|---|---|
| A101 | 20-1/8 | 30 | 1200 | 14 | 1320 | 12 |
| A102 | 21-1/8 | 31 | 1800 | 14 | 1980 | 12 |
| A103 | 21-1/8 | 32 | 2400 | 14 | 2640 | 12 |
| A104 | 21-1/8 | 33 | 3600 | 14 | 3960 | 12 |
| A105 | 21-1/8 | 35 | 5400 | 14 | 5940 | 12 |

[1]Motor speed shall be 3600 revolutions per minute r/min).
[2]Total pressure in water gauge.

**3.8.1.8 Physical dimensions and tolerance.** Physical dimensions and tolerances of the fans shall be as shown on NAVSEA Drawing 803-6397248.

Downloaded from http://www.everyspec.com



**3.8.2 Fan casings and associated parts.**

3.8.2.1 **Material.** Casings, flanges, and vanes shall be made from steel plate or they may be included in a single casting of aluminum alloy.

**3.8.2.2 Material thickness.** Steel casings shall be not less than 0.172 inch thick. Aluminum casings shall be at least 50 percent thicker. The machined fan race area is not exempt from this requirement.

**3.8.2.3 Flanges.** Flanges for duct connections shall be provided at each end of the fan casing. These flanges shall be separate steel rings welded to a steel plate casing, rolled extensions of a steel casing, or integral parts of a cast casing. The flanges shall be drilled as shown on NAVSEA Drawing 803-6397248 with equally spaced bolt holes straddling the conduit centerline and aligned in the two flanges. An additional flanged connection may be provided at the manufacturer's option for stiffening large casings or to permit use of a heavier gauge fan race section. This extra flange shall have the same bolting as the end flanges, as well as three unequally spaced dowels. The radius of rolled flanges shall be between 1/8 and 1/4 inch for casings up to 32-inch diameter, and 3/8 inch maximum for larger casings.

**3.8.2.4 Direction vanes.** Vanes for steel plate casings shall be single thickness steel plate or of steel sheet formed into airfoil shape. Each steel vane shall be attached to the inside of the casing wall by means of a continuous weld on one side of the vane or by intermittent welds of equivalent total length, staggered on opposite sides of the vane. On casings of cast construction, air foil vanes and a motor mounting flange shall be cast integral with the casing.

**3.8.2.5 Motor mounting.** Motors shall be face mounted by cap screws and shall be removable for maintenance. The motor mounting flange shall be an integral part of the casing when the casing is an aluminum alloy casting; on steel plate casings, the motor mounting flange shall be of steel and shall be welded to the vanes by means of a continuous weld on each side of each vane. A secondary mounting or support may be provided between the motor frame and the vanes or the casing to prevent excessive motor excursion, especially under shock effect. In each of these mountings, damping of rotor vibration shall be achieved by avoiding metal-to-metal contacts.

**3.8.2.6 Watertightness.** Casings shall be of watertight construction (see 4.6.5).

**3.8.3 Fan impellers.**

3.8.3.1 **Material.** The impeller, consisting of hub, web, rim, and blades shall be a one-piece casting or machined part casting of a aluminum alloy conforming to 3.2.3. The blades shall be of airfoil design.

3.8.3.2 **Strength.** Impellers shall have a safety factor of 8, based on the ultimate tensile strength of the material. This applies to all parts of the fan impellers.

Downloaded from http://www.everyspec.com



**3.8.3.3 Hub inserts.** A 300-series corrosion-resistant insert shall be installed in the hub of each impeller. A keyway shall be machined in the bore of the insert. Inserts shall either be cast-in-place or pressed into the impeller as specified in 3.8.3.3.1 and 3.8.3.3.2.

**3.8.3.3.1 Cast-in-place inserts.** These inserts shall have an irregularly shaped outer periphery and a circumferential groove or the equivalent to prevent all relative movement (whether axial, circumferential or radial) between inserts and remainder of hub after being cast into the wheel.

**3.8.3.3.2 Pressed-in-place inserts.** Inserts for installation in the castings shall be flanged to permit securing to the impellers by means of through-bolting or non-flanged by means of setting screws positioned half in the wheel casting and half in the insert. There shall be an interference fit of the insert in the impellers requiring substantial insertion pressure or shrinkage or both.

**3.8.3.4 Design.** To avoid unbalance, impellers shall be constructed to prevent retention of water when the fan is installed vertically with fan wheel up or horizontally. Where strength requirements permit, a dished web faired into the rim is the preferred design since it meets the moisture retention requirement and avoids the use of a separate nose piece. A web perpendicular to the rim is acceptable. If a nose piece is used, it shall be of aluminum, either cast or formed, and shall be match-marked with the impeller or shall attach to ensure reinstallation in the same position relative to the impeller. The outside diameter of the wheel rim shall be at least as great as the outside diameter of the motor mounting flange. If there is insufficient space between blades for use of a puller, means (such as puller holes) for removing the impeller shall be provided in the hub.

**3.8.3.5 Balancing.** Balancing of the impeller shall be accomplished by removal of metal. Sufficient rim thickness or cast pads on the inside diameter of the rim shall be provided for balancing the impeller.

**3.8.3.6 Impeller mounting.** The completed impeller assembly shall be mounted on the keyed motor shaft and held axially by either a tanged lockwasher and locknut, or a heavy steel washer and a cotter pin castellated nut. The outside diameter of the flat washer shall be greater than the outside diameter of the impeller hub insert. There shall be a slight positive clearance (loose fit) between the assembly and the shaft.

**3.8.4 Electric equipment.**

**3.8.4.1 Motors.** In consideration of the cooling effect of the air stream, motors for vaneaxial fans need not conform to referenced motor specifications in regard to horsepower rating of a standard frame sizes. Motors shall have sufficient torque to start the fans at 90 percent of rated voltage.



between a blade trailing edge and a vane leading edge shall be at least 10 degrees. The maximum

Downloaded from http://www.everyspec.com



**3.8.4.1.1 General requirements.** The motors shall conform to the following:

a. Motor 60 Hz, ac, integral-horsepower

b. *Service* – Service A

c. *Ambient temperature* – 65 ° summer, 10 °C winter

d. *Voltage, phase, and frequency* – 440 v, 3-phase, 60 Hz

e. *Power source* – Type I or MIL-STD-1399, section 300

f. *Duty* – Continuous-air over

g. *Enclosure* – Spraytight

h. Horsepower in accordance with NAVSEA Drawing 803-6397248, efficiency in accordance with MIL-M-17060

i. *Revolutions per minute (r/min)* – 3600 (synchronous) constant speed

j. *Type* – Squirrel cage induction, with not less than 80 percent power factor full load

k. *Skip* – 1.5 percent maximum at full rated load and temperature rise

l. *Mounting* – Face mounted by cap screws

m. *Bearings* – Preload spring shall be installed to load the outer ring of the free bearing. The motor shall be designed so that the bearing temperature rise at the outer ring of the bearing shall not exceed 30 °C in 65 °C ambient.

m *Insulation required* – Class B or F, the stator windings shall be insulated and varnish treated to provide a "sealed insulation system". The sealed insulation system shall be accomplished by a manufacturer who shall be certified as required by MIL-M-17060. The sealed insulation system shall be in accordance with the requirements of MIL-M-17060.

NOTE

While procedures of IEEE 429 are specified for form wound coils, they are equally applicable to random wound coils.

o. *Random wound sealed insulation systems* – Each random wound sealed insulation system motor shall have a stainless steel nameplate attached near the regular nameplate stating "Stator winding insulated to provide a sealed insulation system. CAUTION: If rewinding is required do not use burnout oven for stripping. Cut off one end turn, heat winding by radiant heat and pull windings from slot". An additional octagonal nameplate shall be attached near the regular nameplate starting at the top using two lines "DO NOT OVERHAUL", in the center using two lines "HIGH RELIABILITY", and the bottom using two lines "SEE MOTOR DRAWING".

Downloaded from http://www.everyspec.com



p. Not for submarine service

q. Motor structureborne noise levels shall not exceed the levels shown for type IV in MIL-STD-740-2, or lower when specified by auxiliary manufacturer

r. *Shock test* – MIL-S-901, type A

s. *Winding temperature rise* – Shall not exceed 55 °C at full load when thermally stable in 65 °C ambient. Minimum test of 7 hours at full load in 50 °C ambient shall be performed.

t. *Air gap* – In accordance with MIL-M-17060

u Motor efficiency shall be determined by IEEE STD 112, method "B" for dynamometer or method "C" for duplicate machines with loss segregation identification as required in method "E" and using linear regression analysis. Efficiency shall be shown on the motor nameplate.

v. *Airborne noise levels* – Shall be in accordance with MIL-M-17060

w. *Locked rotor current* – Shall be in accordance with MIL-M-17060

x *Torque* – The locked rotor torque, pullup torque, and breakdown torque of motors shall be at least 70 percent, 70 percent, and 200 percent, respectively, of full load torque

y *Speed-torque characteristics* – The speed-torque characteristics shall be coordinated with the combined inertia of the rotating assembly, including fan wheel. It shall be possible to accelerate the fan unit from standstill to high speed at 90 percent of rated voltage when the current rating of the controller overload protective device does not exceed the motor rated full load current.

z Motor shall be thermal protected.

aa. Design B.

**3.8.4.1.2 Motor shafts.** Shaft shoulders shall be provided for axially positioning each bearing and the fan wheel. Shoulder positioning is preferred for the rotor of the motors. Keys and keyways shall be provided in way of bearing lockwashers (if used), and on the shaft extension. The diameter of the shaft extension shall be greater than the outside diameter of the insert in fan wheels having pressed-in-place inserts.

Downloaded from http://www.everyspec.com



**NOTE**

This requirement may be averted by using wheels with cast-in-place inserts (3.8.3.3.1). The end of the shaft extension shall be threaded for use of a locknut and tanged lockwasher or threaded and drilled for a castellated nut and cotterpin. If the shaft is not of corrosion-resistant material, the shaft extension shall be coated with corrosion preventive compound, MIL-C-16173, grade 1, before mounting of the fan wheel.

**3.8.4.1.3 Motor end brackets.** The material shall be cast steel, nodular or malleable iron. Means shall be provided for pulling or prying brackets from the motor frame. Match mark depressions shall be made in the bare metal (before painting) on the outer periphery of brackets and frame to ensure duplication of the original assembly.

**3.8.4.1.4 Balancing.** The preferred method of balancing motor rotating assemblies is by removal of material from the rotor or from discs provided for this purpose.

**3.8.4.1.5 Magnet wire.** Standard whole sizes of round wire or those sizes of square or rectangular wire listed in MIL-E-917 shall be used in all motors.

**3.8.4.1.6 Conduit boxes.** A conduit box shall be fabricated or integrally cast as part of the casing. The material shall be cast steel, fabricated steel, cast aluminum, nodular or malleable iron and shall be mounted on the outside of the fan casing in line with the motor lead entrance. Preferably, the box should be mounted by means of four screws, permitting box rotation in 90-degree increments, and fitted with a single lead inlet with threaded fittings. If the box cannot be rotated, threaded couplings shall be provided on three sides of the box. Leads connected within the box to terminals shall be fitted with solderless connectors. Boxes shall be the same degree of enclosure as the motors with which they are used.

**3.8.4.1.7 Conduits.** The lead wires from the conduit box to the motor shall be enclosed in a watertight conduit. Where the casing, vanes and motor frame are included in a single casting, an acceptable conduit may be provided by drilling one or more holes through a vane with the condition that a ground circuit be established between the motor frame and the conduit box; otherwise, a separate watertight conduit shall be provided, preferably a flexible conduit consisting of braided copper tubing braised to threaded end fittings and covered with a neoprene cover, vulcanized to form a bond with the braid, or galvanized steel with a thermoplastic elastomer outer jacket and threaded, compression, watertight end fittings. If conduit is not flexible a threaded pipe conduit shall be provided, and the damping of the rotor vibration shall be achieved by avoiding metal-to-metal contact. In each case, an effective electrical ground shall be provided from the motor frame to the fan casing and the conduit box.

Downloaded from http://www.everyspec.com



**3.8.4.1.8 Bearings.** Motors shall be equipped with ball bearings conforming to MIL-B-17931 (quite type) or FF-B-171 (ABEL-5). Bearings on each end shall be of different size. Bearing sizes shall be as specified for the motor frame size in MIL-M-17060 and shall conform to the following:

a. *Type* – 111

b. *Class* – 1

c. *Width* – Single

d. *Grease* – DOD-G-24508

e. *Grease chamber* – The bearing grease chamber shall provide as a minimum the lubrication capacity equivalent to that provided for a type 120 bearing. Two plugged threaded holes, 180 degrees apart, shall be provided for each bearing cavity to add grease.

f. *Grease seals* – Labyrinth non-rubbing type seals shall be provided on both sides of the bearings to prevent the leakage of oil or grease along the shaft.

g. *Grease slingers* – Slingers shall be provided which make the grease available to the bearing and to direct the grease away from the shaft seals.

h. *Mounting* – The inner ring of the fixed bearing on one end shall be held axially against a shaft shoulder by either a locknut and lockwasher or a locknut with nylon insert. The outer ring of the fixed-end bearing shall be held axially between a housing shoulder and a bearing cap. For the free bearing, a housing shoulder may be omitted when the bearing is held axially on the shaft; if a housing shoulder is provided, the axial clearance between the bearing and the shoulder shall accommodate thermal linear expansion of the shaft.

3.8.5 Fan performance.

**3.8.5.1 Volume and pressure.** The design point for each size fan shall be volume-pressure point at 14 inches of water gauge total pressure shown for that size on table III. The total pressure shall rise continually from free delivery to a value at least as high at the stated volume as shown on table III, and throughout this range of stable performance the volume in $ft^3$/min shall be within 2 percent of the volume indicated in table III. The pressure developed by a fan is the pressure at the fan discharge, and the volume is the volume at the fan inlet.

**3.8.5.2 Aerodynamic stall.** Effective stall (see 4.6.2) shall not occur at capacities greater than 85 percent of the fan design or rated $ft^3$/min.

**3.8.5.3 Noise level.** The fan-motor unit shall meet the sound power levels specified in table IV (see 4.6.3).

Downloaded from http://www.everyspec.com



TABLE IV. *Total sound power levels in decibels (dB) with reference to $10^{-12}$ watts*[1].

| Fan size code | Octave band center frequency in Hz | | | | | | | |
|---|---|---|---|---|---|---|---|---|
| | 63 | 125 | 250 | 500 | 1000 | 2000 | 4000 | 8000 |
| A101 | 90 | 95 | 96 | 100 | 107 | 106 | 99 | 90 |
| A102 | 88 | 98 | 98 | 101 | 110 | 106 | 99 | 93 |
| A103 | 87 | 101 | 102 | 102 | 112 | 109 | 101 | 92 |
| A104 | 96 | 103 | 105 | 104 | 112 | 111 | 103 | 94 |
| A105 | 90 | 101 | 108 | 105 | 113 | 112 | 102 | 97 |
| AMCA 300, standard deviation | 6 | 3 | 2 | 1.5 | 1.5 | 1.5 | 1.5 | 3 |

[1]Measurements of total sound power levels made in accordance with AMCA 300 result in measurement uncertainties within the standard deviations specified in table IV. Acceptable fan total sound power levels for each octave band are those values which are less than or equal to the sum of the tabulated total sound power level plus the specified standard deviation. An additional 4 dB is allowable in the octave band in which the blade passing frequency occurs to account for the tone generated at the blade passing frequency.

## 4 QUALITY ASSURANCE PROVISIONS

**4.1 Responsibility for inspection.** Unless otherwise specified in the contract or purchase order, the contractor is responsible for the performance of all inspection requirements (examinations and tests) as specified herein. Except as otherwise specified in the contract or purchase order, the contractor may use his own or any other facilities suitable for the performance of the inspection requirements specified herein, unless disapproved by the Government. The Government reserves the right to perform any of the inspections set forth in the specification where such inspections are deemed necessary to ensure supplies and services conform to prescribed requirements.

**4.1.1 Responsibility for compliance.** All items shall meet all requirements of sections 3 and 5. The inspection set forth in this specification shall become a part of the contractor's overall inspection system or quality program. The absence of any inspection requirements in the specification shall not relieve the contractor of the responsibility of ensuring that all products or supplies submitted to the Government for acceptance comply with all requirements of the contract. Sampling inspection, as part of the manufacturing operations, is an acceptable practice to ascertain conformance to requirements, however, this does not authorize submission of known defective material, either indicated or actual, nor does it commit the Government to accept defective material.

**4.2 Classification of inspections.** The inspections specified herein are classified as follows:

a. First article inspection (see 4.3)
b. Quality conformance inspection (see 4.4).

Downloaded from http://www.everyspec.com



**4.3 First article inspection.** First article inspection shall consist of the examinations of 4.5 and tests as specified in table V.

**4.4 Quality conformance inspection.** Quality conformance inspection shall consist of the examinations of 4.5 and tests as specified in table V. The tests specified in 4.6.1, 4.6.2, 4.6.3.2, and 4.6.4 shall be performed on each fan-motor unit.

TABLE V. *Test agenda.*

| Applicability of test to fan type | | | | |
|---|---|---|---|---|
| Tests | Requirement | Test | First article | Quality conformance |
| Performance | 3.8.5 | 4.6.1 | all | all |
| Aerodynamic stall | 3.8.5.2 | 4.6.2 | all | all |
| Noise | | | | |
| by meter | 3.8.5.3 | 4.6.3.1 | all | – |
| by ear | – | 4.6.3.2 | – | all |
| Balance | 3.6 | 4.6.4 | all | all |
| Vibration | 3.6 | 4.6.4.1 | all | – |
| Casing tightness | 3.8.2.6 | 4.6.5 | all[1] | – |
| Speed | 3.8.4.1.1 | 4.6.6 | – | – |
| Shock | 3.8.1.2 | 4.6.7 | all | – |
| Motor heat with fan | 3.8.4.1.1 | 4.6.8 | all | all |
| Bearing temperature | 3.8.4.1.1 | 4.6.9 | all | – |
| Blade tip clearance measurement | 3.8.1.1 | 4.6.10 | all | all |

[1]Casing tightness test is required only when specified (see 6.2).

**4.5 Material and dimensional examination.**

**4.5.1 Cast impeller and casing.** Test samples shall be inspected for chemical content and mechanical properties in a accordance with QQ-A-601 except radiography of visually sound castings is not required. Repairs of cast impeller are not permitted. Cast casings may be repaired by welding or impregnation if completed in accordance with the requirements of MIL-STD-278.

**4.5.2 Fabricated steel casing.** Steel casings shall be visually examined for defects. Cracks in the radius of spun flanges or in the welds of welded flanges may be repaired by welding, after proper preparation, provided that radiographic inspection of the repaired areas is performed. Wall thickness shall be measured on at least 10 percent of the casings. Casings shall meet the requirements of 3.8.2.3 and 3.8.2.4 for wall thickness and flange construction.

Downloaded from http://www.everyspec.com



**4.5.3 Assembled fan-motor units.** The maximum blade tip clearance shall be measured at four points 90 degrees apart for conformance to 3.8.1.1.

**4.6 Tests.** Tests shall be as specified in 4.6.1 through 4.6.11 (see 6.3 and appendix B).

**4.6.1 Performance.** Performance tests shall be conducted in accordance with AMCA 210. Any of the test stands that utilize nozzles as a flow measuring device and associated instrumentation may be used.

**4.6.2 Aerodynamic stall.** The effective stall capacity shall be determined from the largest capacity measurement of the following three stall measurement methods.

**4.6.2.1 Throttled stall capacity.** This method is capacity at which the fan goes into stall when slowly throttling the discharge with the fan operating.

**4.6.2.2 Stall recovery capacity.** This method is the capacity at which the fan recovers from a stalled condition when the fan is operating in a stalled condition and the discharge throttle is slowly opened while moving towards free delivery.

**4.6.2.3 Stable start-up capacity.** This method is capacity at which stable, stall free operation first occurs, as the fan is started from a no-spin condition with the throttling device fixed at progressively larger openings.

**4.6.3 Noise.** Noise test shall be a meter test consisting of sound power determination in accordance with 4.6.3.1 through 4.6.3.2.

**4.6.3.1 Total sound power.** Total sound power shall be determined in accordance with AMCA 300. In this method, sound pressure of the test fan-motor unit is compared to that of a reference sound source having a known sound power level in each octave band. Sound power levels shall be taken in each octave band (series 2) with the fan operating at the design point and shall be referenced to a power of $10^{-12}$ watts. Exceeding the level in any octave band shall be cause for rejection.

**4.6.3.2 Noise by ear.** Fan-motors units not undergoing a meter test shall be operated at maximum speed and free delivery. Any unusual or excessive noise heard by the human ear shall be corrected if the cause is apparent or the unit shall be tested by meter to establish whether it meets the noise requirements of this specification.

**4.6.4 Balance test.** In this test, the fan-motor unit shall be operated at maximum speed and free delivery, with shaft horizontal. It shall be suspended from a stand by means of two elastic vibration cords, one secured to each end flange. The cords shall have a natural frequency of less than 1/4 of the minimum rotational frequency of the unit in Hz. The static deflection shall be within the limits of MIL-STD-167-1 for elastic mounting elements, and this shall be the basis for determining cord size for each unit tested. As an alternative to this suspension test, rigid brackets

Downloaded from http://www.everyspec.com



shall be bolted to the fan end flanges, and these brackets shall be elastically mounted on a rigid, level floor. Another alternative is that the fan-motor unit shall be suspended from an electric hoist by means of two chains, one secured to the end flanges of the fan-motor unit (that is, the ends of the chain secured to opposite flanges); one secured to the electric hoist and to the center of the chain secured to the end flanges. The length of the chains shall be not less than 15 inches nor more than 35 inches, and the link size of the chains shall be not less than 1/4 inch nor more than 3/8 inch. With either method, the internally excited vibrational displacement (single amplitude of vibration) shall be measured in mils as follows: four axial measurements 90 degrees apart on the face of each end flange, one horizontal measurement perpendicular to the axis on the edge of each flange, and one vertical measurement on the top edge of each flange. The maximum amplitude of vibration shall be the maximum single reading, and not an average. The operating frequency at which the maximum amplitude occurs shall be measured. Exceeding vibration limit specified in 3.6 cause for rejection.

**4.6.4.1 Vibration test.** Fan-motor units shall be subjected to type I environmental vibration tests as specified in MIL-STD-167-1. The exploratory vibration test specified in MIL-STD-167-1 shall include frequencies up to 33 Hz at the table amplitude specified therein. The vibration test shall be conducted as specified in 4.6.11. Any unit which fails to meet any requirements shall be rejected.

**4.6.5 Casing tightness.** When this test is required, the requirements as well as the test conditions shall be specified in the contract or order (see 6.2). If conditions are not specified, the test shall be conducted as follows: Blind flanges (one with air supply and gauge connections) shall be bolted to gasketted fan flanges. Air at a pressure 50 percent higher than the maximum pressure capability of the fan shall be supplied to the casing interior. The pressure drop in 10 minutes shall not exceed 5 percent of the test pressure.

**4.6.6 Speed.** The fan-motor unit shall be operated at each speed at free delivery to determine whether the speed conforms approximately with design speed at rated voltage.

**4.6.7 High-impact shock.** The fan-motor unit shall be shock tested on the medium weight machines as specified for grade A shock of MIL-S-901. The high-impact shock test shall be conducted after the tests specified in 4.6.1, 4.6.2, 4.6.3, 4.6.4, 4.6.4.1, 4.6.5, 4.6.6, 4.6.8, 4.6.9, and 4.6.10. After conducting the high-impact shock test, tests specified in 4.6.1 and 4.6.2, shall be again conducted without correction of damages which may have occurred during shock test. Shock testing in accordance with these requirements shall demonstrate that the fan-motor unit performs its function with acceptable changes in performance and aerodynamic stall. Shock test acceptance shall be contingent upon the ability of the equipment after shock testing to satisfy performance within 5 percent of the volume indicated in table III, and aerodynamic stall with capacities not to occur grater than 90 percent of the fan design or rated $ft^3$/min. Evidence of fragmentation or missile effect of part, deformation that will cause active interference between parts, or failure to operate shall be cause for rejection. In this test, bolts shall be used in each of the flange bolt holes. Fan-motor units which have passed this test may be used as production units after replacement of motor bearings.

Downloaded from http://www.everyspec.com



**4.6.7.1 Shock on medium weight machine.** The test of a fan-motor unit shall constitute of the nine blows specified in table VI. The required mountings are shown on figure 3. Auxiliary channels shall be used to bolt the mounting brackets or plate to standard fixtures.

TABLE VI. *Test on medium weight shock machine.*

| Blow No. | Group No. | Hammer drop | Anvil travel (inches) | Operating condition | Fan orientation[1] |
|---|---|---|---|---|---|
| 1 | I | (Based | 3 | Secured | No. 1 |
| 2 | II | on | 3 | Operating | No. 1 |
| 3 | III | weight, | 1.5 | Secured | No. 1 |
| 4 | I | see | 3 | Operating | No. 2A |
| 5 | II | MIL-S-901) | 3 | Secured | No. 2A |
| 6 | III | (Based on | 1.5 | Operating | No. 2A |
| 7 | I | weight, | 3 | Secured | No. 2B |
| 8 | II | see | 3 | Operating | No. 2B |
| 9 | III | MIL-S-901) | 1.5 | Secured | No. 2B |

[1]See figure 2.

**4.6.7.2** Upon completion of the shock test, post-shock test inspection, and specified test, the fan-motor unit shall be returned to the contractor for examination and further testing.

**4.6.8 Heat motor.** Motor heating shall be measured as specified in the applicable motor specification. In each test, the motor shall be installed in the fan, and a duct shall be attached to the fan discharge. Full load shall be obtained by means of a terminal throttle on the test duct. Since neither the fan nor a suitable test stand will normally be available at the motor plant, the heat test may be conducted at the plant of the fan manufacturer.

**4.6.9 Bearing temperature.** Bearing temperature shall be measured with the fan mounted in vertical with impeller on bottom. Full load shall be obtained by means of a terminal throttle on attached test duct. Bearing outer ring temperature shall not exceed requirements of 3.8.4.1.1.m.

**4.6.10 Blade tip clearance measurement.** The fan blades shall be in a stationary position for the entire measurement. Inspect visually to locate an apparent maximum clearance (radial clearance) from the blade tip to the inside of fan casing. Measure this apparent maximum clearance and move the measurement to three different locations at 90, 180, and 270 degrees relative to the apparent maximum clearance. Compare the four measurements to determine the true maximum blade clearance. This maximum clearance shall not exceed 1/4 of 1 percent of the casing inside diameter.

Downloaded from http://www.everyspec.com



**4.6.11 Test schedule.** The schedule for testing the fan shall be performed in the following order:

a. *Balance (4.6.4)*

b. *Casing tightness (4.6.5)*

c. *Blade tip clearance measurement (4.6.10)*

d *Performance (4.6.1), aerodynamic stall (4.6.2), speed (4.6.6), heat motor (4.6.8), and bearing temperature (4.6.9).* These tests shall be conducted concurrently.

e. *Noise (4.6.3)*

f. *Vibration test (4.6.4.1).* The correction of damages, which may have occurred during the vibration tests, shall not be performed prior to the test specified in 4.6.7.

g. *High-impact shock (4.6.7).* After conducting the high-impact shock test, tests specified in 4.6.1 and 4.6.2 shall be again conducted without correction of damages which may have occurred during shock test. Shock test in accordance with these requirements shall demonstrate that the fan-motor unit performs its function with acceptable changes in performance and aerodynamic stall. Shock test acceptance shall be contingent upon the ability of the equipment, after shock testing, to satisfy performance within 5 percent of the volume indicated in table III, and aerodynamic stall with capacities not to occur greater than 90 percent of the fan design or rated $ft^3$/min.

**4.7 Inspection of packaging.** Sample packages and packs, and the inspection of the preservation, packing, and marking for shipment and storage shall be in accordance with the requirements of section 5 and the documents specified therein.

## 5. PACKAGING

(The packaging requirements herein apply only for direct Government acquisition. For the extent or applicability of the packaging requirements of documents listed in section 2 (see 6.2).)

**5.1 Preservation.** Preservation shall be level A or commercial as specified (see 6.2).

**5.1.1 Level A.** Fan-motor units shall be preserved method II in accordance with MIL-P-116 (sub-method at the contractor's option) dependent on the size and weight of the fan unit.

**5.1.1.1 Modified method II.** The following will be acceptable in accomplishing the required method II preservation procedure for fan-motor units:

a. Preservative application is not required.

b. The threaded connections in the conduit box shall be fitted with pipe plugs.

Downloaded from http://www.everyspec.com



c. Bagged desiccant shall be attached to the inside of the casing in accordance with MIL-P-116.

d. A rubber disc gasket and a blind gasket of 1/2-inch plywood or minimum 20 gage steel plate shall be bolted to the face of each of the casing flanges.

e. A plug type humidity indicator shall be installed in accordance with MIL-P-116 in one of the blind flanges.

f. The unit as protected shall be marked, "Method II Modified. Removed Desiccant Prior to Installation".

**5.1.1.2 Commercial.** Fan-motor units shall be preserved as specified in 5.1.1.1, except that desiccant, humidity indicator and the marking specified is not required.

**5.2 Packing.** Packing shall conform to MIL-E-16298 level A, B, C, or Commercial as specified (see 6.2).

**5.2.1 Shock and vibration mitigation.** All levels of packing shall employ a shock and vibration mounting system that will ensure parts of the units (e.g. bearings) are not damaged due to normal shock and vibration that occur during handling and shipment. Each unit preserved as specified in 5.1 shall be mounted in it's shipping container or commercial pallet box with the fan mounted vertically and the impeller end of the fan pointing up. Shock mounts shall be fastened to the lower fan casing, located equidistant around the casing and shall consist of four metal heli-coil flex type wire mounts. The contractor is responsible to determine the proper mounts for the weight and size of the fan unit to be packed.

**5.3 Marking.** In addition to any special marking required (see 6.2), marking shall be in accordance with MIL-E-16298 except that for the critical close tolerance requirement, such marking shall be placed on the top and on all four sides of the shipping container.

## 6. NOTES

(This section contains information of a general or explanatory nature that may be helpful, but is not mandatory.)

**6.1 Intended use.** The fan-motor units specified herein are intended for ventilation applications on board ships of the United States Navy. The direction of airflow into and out of the fans is axial. The fans are of nonsparking construction. Fans are high efficiency units intended for systems having a resistance of 14.0 inches of water. Their compactness recommends them for general shipboard service, especially when installed horizontally to the overhead.

Downloaded from http://www.everyspec.com



**6.2 Acquisition requirements.** Acquisition documents must specify the following:

a. Title, number, and date of this specification

b. Issue of DODISS to be cited in the solicitation, and if required, the specific issue of individual documents referenced (see 2.1.1 and 2.2)

c. Type required (see 1.2)

d. When casing pressure test is required (see table V) specify test conditions if other than standard (see 4.6.5)

e. Level of preservation, packing, and marking required (see 5.1, 5.2, and 5.3).

**6.3 Consideration of data requirements.** The following data requirements should be considered when this specification is applied on a contract. The applicable Data Item Descriptions (DID's) should be reviewed in conjunction with the specific acquisition to ensure that only essential data are requested/provided and that the DID's are tailored to reflect the requirements of the specific acquisition. To ensure correct contractual application of the data requirements, a Contract Data Requirements List (DD Form 1423) must be prepared to obtain the data, except where DOD FAR Supplement 27.475-1 exempts the requirement for a DD Form 1423.

| Reference Paragraph | DID Number | DID Title | Suggested Tailoring |
|---|---|---|---|
| 3.8 and appendix A | DI-DRPR-80651 | Engineering Drawings | – |
| 4.6 and appendix B | DI-MISC-80653 | Test Reports | – |

The above DID's were those cleared as of the date of this specification. The current issue of DOD 5010.12-L, Acquisition Management Systems and Data Requirements Control List (AMSDL), must be researched to ensure that only current, cleared DID's are cited on the DD Form 1423.

**6.4 First article.** When first article inspection is required, the contracting officer should provide specific guidance to offerors whether the item(s) should be a preproduction sample, a first article sample, a first production item, a sample selected from the first _____ production items, a standard production item from the contractor's current inventory (see 3.1), and the number of items to be tested as specified in 4.3. The contracting officer should also include specific instructions in acquisition documents regarding arrangements for examinations, approval of first article test results, and disposition of first articles. Invitations for bids should provide that the Government reserves the right to waive the requirement for samples for first article inspection to those bidders offering a product which has been previously acquired or tested by the Government, and that bidders offering such products, who wish to rely on such production or test, must furnish evidence with the bid that prior Government approval is presently appropriate for the pending contract. Bidders should not submit alternate bids unless specifically requested to do so in the solicitation.

Downloaded from http://www.everyspec.com



**6.5 Bellmouth intakes.** Inlet bells for type A and X-A fans are shown on Drawing 810-451223. These bells are required when ducts are not attached to fan inlets.

**6.6 Drainage of motor condensate.** It is intended that the lowest condensate drain plug in the motor be removed and discarded when the fan is installed to permit continual drainage of condensate by gravity to the air stream.

**6.7 Avoiding drainage to conduit box.** For horizontal installation on shipboard, a fan should be installed with conduit box above the horizontal centerline. This will prevent drainage of motor condensate to conduit box. Preferred installation with conduit box 45 degrees above horizontal centerline.

**6.8 Sub-contracted material and parts.** The packaging requirements of referenced documents listed in section 2 do not apply when material and parts are acquired by the contractor for incorporation into the equipment and lose their separate identify when the equipment is shipped.

**6.9 Approval.** Unless drawings for each contracting fan size have been previously approved and are within a 5 year time frame from the date of approval, the contractor is responsible to submit to the acquisition activity, for approval, the following: (1) two prints of the fan assembly drawing; and (2) two prints of the motor proposed for use with the fan.

**6.9.1 Final drawings.** After comments on new drawings are approved, adjudicated or reconciled, the contractor is responsible to: (1) forward final fan and motor drawings to acquisition activity; and (2) include special requirements of the contract or order prior to distribution of final drawings.

**6.9.2 Identifying numbers.** A national stock number (NSN) and a component identification number (CID No.) will be assigned by the Government after drawing approval. The contractor is responsible to: (1) identify these numbers in shipping papers; and (2) mark these numbers on each fan and motor identification plates.

**6.10 Subject term (key word) listing.**

Blade
Casing
Duct
Impeller
Vane

Preparing activity:
Navy – SH
(Project 4140-N058)

Downloaded from http://www.everyspec.com



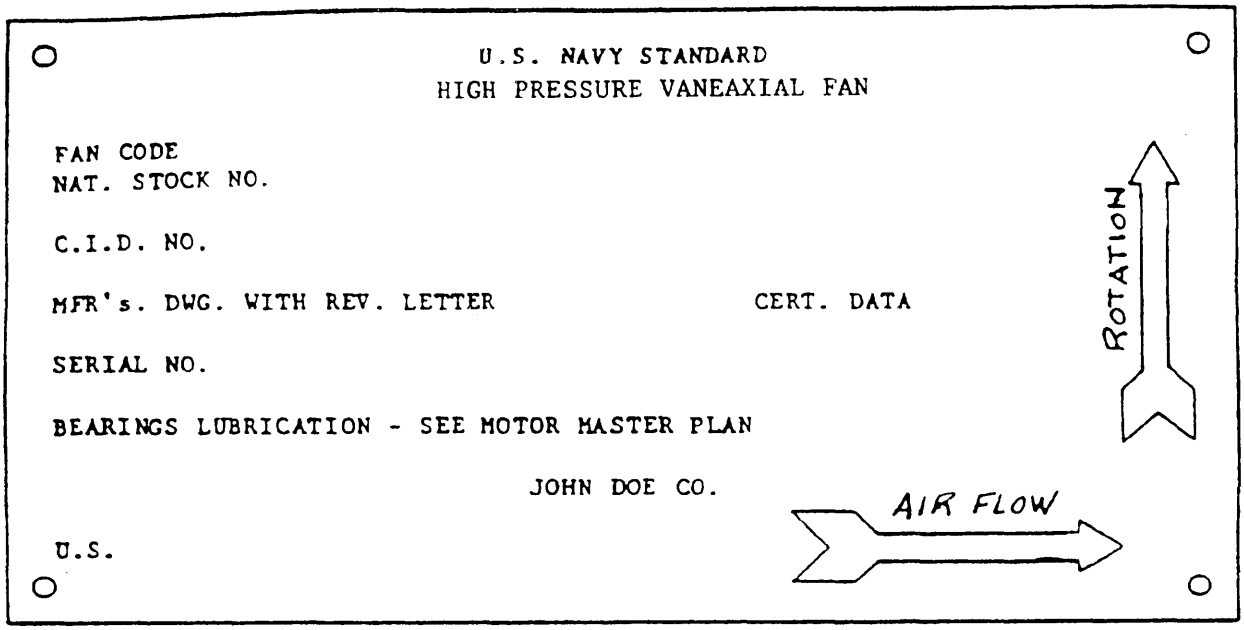


Note that the direction of rotation arrow indicated hereby is for guidance only. However, the direction of airflow arrow shall be as shown.

SH 13231993

FIGURE 1. *Identification plate, Navy standard high pressure vaneaxial fan.*

Downloaded from http://www.everyspec.com



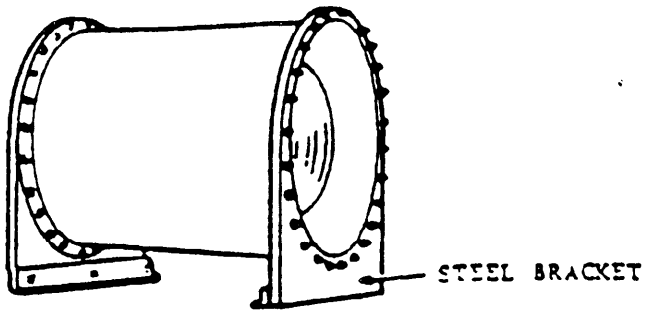


ORIENTATION NO. 1
(HORIZONTAL)

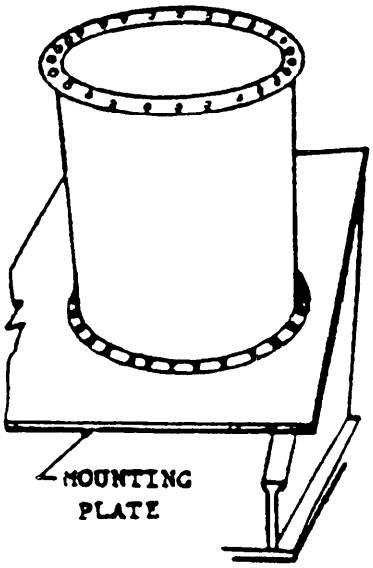


ORIENTATION NO.2B
FAN WHEEL UP
(INCLINED ∡ 30 DEGREES)

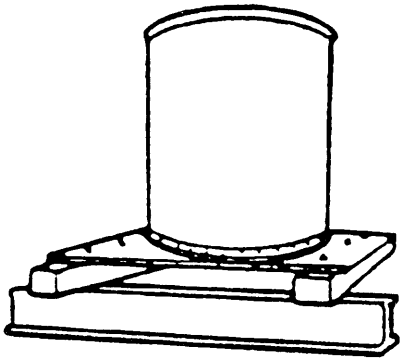

ORIENTATION NO. 2A
FAN WHEEL DOWN
(VERTICAL)

SH13231994

FIGURE 2. *Mountings for medium shock machine.*

Downloaded from http://www.everyspec.com



# APPENDIX A

## ENGINEERING DRAWINGS TECHNICAL CONTENT REQUIREMENTS

## 10. SCOPE

**10.1 Scope.** This appendix covers the technical requirements that should be included on drawings when required by the contract or order. This appendix is mandatory only when data item description DI-DRPR-80651 is cited on the DD Form 1423.

## 20. APPLICABLE DOCUMENTS

### 20.1 Government documents.

**20.1.1 Specifications.** The following specification forms a part of this document to the extent specified herein. Unless otherwise specified, the issue of this document is that listed in the issue of the Department of Defense Index of Specifications and Standards (DODISS) and supplement thereto, cited in the solicitation.

SPECIFICATIONS

MILITARY

DOD-D-1000 Drawings, Engineering and Associated Lists

(Unless otherwise indicated, copies of military specifications are available from the Standardization Documents Order Desk, Building 4D, 700 Robbins Avenue, Philadelphia, PA 19111-5094.)

## 30. DRAWINGS

**30.1 Drawings.** Drawings shall be identified by the contractor's identification and documents number and shall be in accordance with DOD-D-1000 for level 2 drawings. When required by the contract or order, drawings shall contain the following information:

**30.1.1 Fan assembly drawing.**

a. A longitudal, sectional view of the fan, showing arrangement of component parts which are identified by piece number flagging. All welds shall be indicated by standard weld symbols. The following additional data shall be shown in this view:

(1) Overall (flange face-to-face) fan length and mounting flange outside diameter to the nearest 1/16 inch

Downloaded from http://www.everyspec.com



(2) Fan casing inside diameter and wheel (blade) tip diameter to 0.001 inch with tolerance

(3) Axial distance from the face of the motor mounting flange to the conduit centerline

(4) Keyway dimensions of the wheel hub and wheel hub to bore diameter 0.0001 inch with tolerance

(5) Axial length of vanes

(6) Indication of the area of wheel from which metal is to be removed in balancing, and the permissible depth of such removal

(7) The nominal axial distance between the trailing edge of a blade at midpoint to the leading edge of a vane

(8) Location on the casing of fan and motor identification plates.

b. An end view of the fan with motor removed, showing the following:

(1) Direction of wheel rotation

(2) Inside diameter of the motor-mounting flange or the diameter of the rabbet in the motor mounting flange (whichever surface is used for positioning the motor) in thousandths of an inch with tolerance.

(3) The quantity and size of equally spaced mounting holes and the bolt center diameter in the fan flanges and motor-mounting flange

c. If necessary for clarity, separate details of the motor face mounting (secondary mounting if provided), conduit, and conduit box

d. Separate details of the motor-mounting gasket; fan identification plate; a section of the wheel showing undimensioned end profile of a blade with stagger angle at blade root and blade tip indicated; the wheel hub insert; and the fit of the nose to the wheel (if the wheel has a separate nose or cap)

e. A complete list of material. The quantity of blades and vanes shall be indicated, as well as the thickness of casing, vanes, and motor-mounting flange, unless the thickness is dimensioned in a view. Thread data of threaded fasteners shall be given.

f. General notes, including the following:

(1) A statement directing reference to a fan certification data sheet for identification of electrical components and specific fan-motor test data, center of gravity, and moments of inertia

(2) A statement of the permissible tolerance for all untoleranced dimensions

Downloaded from http://www.everyspec.com



(3) Indication of the method of securing the wheel hub insert in the wheel; if by press fit, the interference fit and the minimum insertion pressure shall be stated

(4) A caution statement directing connections of a ground wire if applicable

(5) Statements identifying the plating, welding, and painting of components or assemblies

(6) Indication of the method of balancing the fan wheel

(7) Indication of the passing angle, viewed axially, of a blade trailing edge and a vane leading edge

(8) A statement of the minimum casing wall thickness (including the fan raceway which is normally machined)

(9) Identification of any carbon steel surface which may be machined after, plating, and a statement of the treatment of such area prior to painting

(10) Any other statements necessary for clarity

(11) At the manufacturer's option, statements for manufacturer's use only, so designated

g. A nonlogarithmic graph, with cubic feet of standard air per minute ($ft^3$/min) as the abscissa, and total pressure, static pressure, speed (r/min), brake horsepower and power input kilowatts (kW) or input horsepower as ordinates. The graph shall be identified by fan code and by the test number and date.

30.1.2 **Fan detail drawings.** Fan detail drawings shall include the following:

a. Shall be furnished of all parts and sub-assembly necessary for evaluation of the equipment and all parts necessary for maintenance and overhaul.

b. Sub-assemblies whose parts cannot be acquired or serviced individually shall be shown as a single part.

c. Show all essential fabrication details including welding requirements and symbols.

d. Drawings are not required for those parts which are in common commercial use and can be referenced to commercial standards.

30.1.3 **Auxiliary drawings.** Auxiliary drawings shall include the following:

a. If fans are to be flexibly mounted, the mounting brackets and mount requirements shall be detailed in a separate level 2 composite or multisheet drawing.

Downloaded from http://www.everyspec.com



APPENDIX A

b. Drawings of motors used with fans shall conform to the requirements of MIL-M-17060. Structureborne noise levels in accordance with MIL-STD-740-2 shall be shown on each motor drawing for information only and shall not be applied to any specific requirement. Drawings shall also include magnet wire size.

c. Drawings of motor shall indicate the lubrication method as specified in 3.8.4.1.8. These drawings shall also state the axial clearance between the bearing and shoulder to accommodate thermal linear expansion of the shaft, if a housing shoulder is provided (see 3.8.4.1.8).

Downloaded from http://www.everyspec.com



# APPENDIX B

## TEST REPORT TECHNICAL CONTENT REQUIREMENTS

## 10. SCOPE

**10.1 Scope.** This appendix covers the technical requirements that should be included in test reports when required by the contract or order. This appendix is mandatory only when data item description DI-MISC-80653 is cited on the DD Form 1423.

## 20. APPLICABLE DOCUMENTS

This section is not applicable to this appendix.

## 30. TEST REPORTS

**30.1 Report of performance, noise, balance, and motor heating.** The figure number of AMCA 210 shall be identified, together with duct or chamber dimensions and the diameter of nozzle if used. The following values shall be reported in tabular form: ambient barometric pressure, dry bulb and wet bulb temperatures, and air density; voltage and current (in each phase), motor input kilowatts or horsepower; brake horsepower; fan speed; air velocity; total static and velocity pressure; air quantity ($ft^3$/min); mechanical (total) efficiency; electrical efficiency. The maximum amplitude of vibration at free delivery and frequency at which it occurs shall be reported. Computations need not be included in the report if made strictly in accordance with AMCA 210. A curve sheet shall be included in the report showing motor input, brake horsepower, fan speed, total and static pressures of standard air at fan discharge, as ordinated, and cubic feet of standard air per minute at fan inlet as the abscissa. Motor heating and sound power at design point in each octave band shall be included in this report. An additional curve sheet shall also be included in the report showing results of the tabulated data for speed and torque. The data should be plotted with synchronous speed-percent as the ordinate and the abscissa as torque-percent of full load. The starting, pull-up, breakdown and full load torque shall be indicated on the curve.

**30.2 Report of shock test.** The report shall be made by the shock test laboratory or the forms specified in MIL-S-901 and shall include drawing number identification of the fan and motor, as well as photographs of the fan unit in each test mounting.

**30.3 Calculations.** Calculations required by the contract shall be recorded.

**30.4 Dimensional measurements and visual examinations.** Records of the visual examinations and dimensional measurements made as a requirement of the specification shall be recorded.

**30.5 Chemical or mechanical analyses.** A record of chemical or mechanical analyses is required of castings.

Downloaded from http://www.everyspec.com

# STANDARDIZATION DOCUMENT IMPROVEMENT PROPOSAL

## INSTRUCTIONS

1. The preparing activity must complete blocks 1, 2, 3, and 8. In block 1, both the document number and revision letter should be given.
2. The submitter of this form must complete blocks 4, 5, 6, and 7.
3. The preparing activity must provide a reply within 30 days from receipt of the form.

NOTE: This form may not be used to request copies of documents, nor to request waivers, or clarification of requirements on current contracts. Comments submitted on this form do not constitute or imply authorization to waive any portion of the referenced document(s) or to amend contractual requirements.

| I RECOMMEND A CHANGE: | 1. DOCUMENT NUMBER MIL-F-24755 | 2. DOCUMENT DATE (YYMMDD) 27 December 1990 |
|---|---|---|

3. DOCUMENT TITLE
FANS, VANEAXIAL HIGH PRESSURE NAVAL SHIPBOARD

4. NATURE OF CHANGE (Identify paragraph number and include proposed rewrite, if possible. Attach extra sheets as needed.)

5. REASON FOR RECOMMENDATION

6. SUBMITTER

| a. NAME (Last, First, Middle Initial) | b. ORGANIZATION | |
|---|---|---|
| c. ADDRESS (Include Zip Code) | d. TELEPHONE (Include Area Code) (1) Commercial (2) AUTOVON (If applicable) | 7. DATE SUBMITTED (YYMMDD) |

8. PREPARING ACTIVITY

| a. NAME Technical Point of Contact (TPOC): Mr. Tien Ngo (SEA 05M2) PLEASE ADDRESS ALL CORRESPONDENCE AS FOLLOWS: | b. TELEPHONE (Include Area Code) (1) Commercial TPOC: (703) 602-5487 | (2) AUTOVON 8-332-5487 |
|---|---|---|
| c. ADDRESS (Include Zip Code) Commander, Naval Sea Systems Command | IF YOU DO NOT RECEIVE A REPLY WITHIN 45 DAYS, CONTACT: Defense Quality and Standardization Office | |