MIL-F-24402D(SH)
12 April 1982
SUPERSEDING
MIL-F-24402C(SH)
10 July 1978
(See 6.6)

MILITARY SPECIFICATION

FILTERS (HYDRAULIC), FILTER ELEMENTS (HIGH EFFICIENCY), AND FILTER DIFFERENTIAL PRESSURE INDICATORS

This specification is approved for use by the Naval Sea Systems Command, Department of the Navy, and is available for use by all Departments and Agencies of the Department of Defense.

1. SCOPE

1.1 Scope. This specification covers hydraulic filters, filter elements, and associated differential pressure indicators for use in submarine and surface ship hydraulic control systems.

1.2 Classification. Filter assemblies, elements, and differential pressure indicators shall be designated as standard part numbers as specified in 1.2.1 through 1.2.3, as specified (see 6.2).

1.2.1 Filter assembly part numbers. The standard part numbers for the filter assembly shall be designated as follows:

M	24402	-	1N	-	AP	-	4E
Prefix to indicate a military specification	Specification number		Filter assembly type (see 1.2.1.1)		Filter assembly class (see 1.2.1.2)		Rated fatigue pressure and differential pressure indicator form (see 1.2.1.3 and 1.2.1.4)

Beneficial comments (recommendations, additions, deletions) and any pertinent data which may be of use in improving this document should be addressed to: Commander, Naval Sea Systems Command, SEA 3112, Department of the Navy, Washington, DC 20362 by using the self-addressed Standardization Document Improvement Proposal (DD Form 1426) appearing at the end of this document or by letter.

FSC 4330

1.2.1.1 Filter assembly type. The filter assembly type shall be designated by one of the following number and letter symbols which indicate the number of elements installed, and whether a bypass relief is installed:

1N Single element filter assembly (non-bypass), 3000 pounds per square inch (lb/in^2) maximum operating pressure.
1R Single element filter assembly (with bypass relief), 3000 lb/in^2 maximum operating pressure.
2N Duplex filter assembly (non-bypass), 3000 lb/in^2 maximum operating pressure.
2R Duplex filter assembly (with bypass relief), 3000 lb/in^2 maximum operating pressure.
3N Three element filter assembly (non-bypass), 400 lb/in^2 maximum operating pressure.
3R Three element filter assembly (with bypass relief), 400 lb/in^2 maximum operating pressure.

1.2.1.2 Filter assembly class. The filter assembly class shall be designated by one of the following two letter symbols which indicate the size of element installed (see 1.2.2.1), and the porting configuration:

AP - Assembly utilizes size A elements and has MS16142 ports.
BP - Assembly utilizes size B elements and has MS16142 ports.
BF - Assembly utilizes size B elements and is flange mounted.
CP - Assembly utilizes size C elements and has MS16142 ports.

See 3.2.9 for limitations as to which assembly classes may be used for each type housing.

1.2.1.3 Rated fatigue pressure. Rated fatigue pressure shall be designated by one of the following number symbols which indicate the pressure that a filter assembly is to sustain ten million times without failure:

0 - Not fatigue rated (type 3N and 3R assemblies will not be fatigue rated).
3 - Rated fatigue pressure of 3000 lb/in^2.
4 - Rated fatigue pressure of 4000 lb/in^2.

1.2.1.4 Differential pressure indicator form. The differential pressure indicator form shall be designated by one of the following letter symbols:

G - Gage indicator.
M - Mechanical pop-up indicator.
E - Electrical with mechanical pop-up indicator.

1.2.2 Filter element part numbers. The standard part numbers for a filter element shall consist of the military specification number and the size designation (see 1.2.2.1), as shown in the following example:

M24402-Size B

1.2.2.1 Filter element size. The size of a filter element shall be designated by one of the following letter symbols:

A - (See figure 1)
B - (See figure 2)
C - (See figure 3)
D - (See figure 4)

1.2.3 Differential pressure indicator part numbers. The standard part number for a differential pressure indicator shall consist of the military specification number, the indicator form designation (see 1.2.1.4), and the fatigue rating (see 1.2.1.3), as shown in the following example:

M24402-Form E-3

2. APPLICABLE DOCUMENTS

2.1 Government documents.

2.1.1 Specifications and standards. Unless otherwise specified, the following specifications and standards of the issue listed in that issue of the Department of Defense Index of Specifications and Standards (DoDISS) specified in the solicitation form a part of this specification to the extent specified herein.

SPECIFICATIONS

FEDERAL

QQ-N-281	- Nickel-Copper Alloy Bar, Rod, Plate, Sheet, Strip, Wire, Forgings, and Structural and Special Shaped Sections.
PPP-B-601	- Boxes, Wood, Cleated-Plywood.
PPP-B-621	- Boxes, Wood, Nailed and Lock-Corner.
PPP-B-636	- Boxes, Shipping, Fiberboard.
PPP-B-640	- Boxes, Fiberboard, Corrugated, Triple-Wall.
PPP-C-55	- Cans, Composite, For Dry Products.
PPP-P-40	- Packaging and Packing of Hand Tools.
PPP-T-60	- Tape: Packaging, Waterproof.

MILITARY

MIL-B-117	- Bags, Sleeves and Tubing - Interior Packaging.
MIL-B-121	- Barrier Material, Greaseproofed, Waterproofed, Flexible.
MIL-S-901	- Shock Tests, H.I. (High-Impact); Shipboard Machinery, Equipment and Systems, Requirements for.
MIL-S-1222	- Studs, Bolts, Hex Cap Screws, and Nuts.
MIL-C-5501	- Caps and Plugs, Protective, Dust and Moisture Seal, General Specification for.
MIL-G-5514	- Gland Design; Packings, Hydraulic, General Requirements for.
MIL-H-5606	- Hydraulic Fluid, Petroleum Base; Aircraft, Missile, and Ordnance.
MIL-H-6083	- Hydraulic Fluid, Petroleum Base, For Preservation and Operation.

MIL-A-8625 - Anodic Coatings, for Aluminum and Aluminum Alloys.
MIL-R-8791 - Retainer, Packing, Hydraulic, and Pneumatic, Tetrafluoroethylene Resin.
MIL-I-8846 - Inserts, Screw-Thread, Helical Coil.
MIL-L-10547 - Liners, Case, and Sheet, Overwrap; Water-Vaporproof or Waterproof, Flexible.
MIL-C-15726 - Copper-Nickel Alloy, Rod, Flat Products (Flat Wire, Strip, Sheet, Bar, and Plate) and Forgings.
MIL-L-17331 - Lubricating Oil, Steam Turbine and Gear, Moderate Service.
MIL-H-19457 - Hydraulic Fluid, Fire Resistant.
MIL-C-20159 - Copper-Nickel Alloy (70-30 and 90-10): Castings.
MIL-H-22072 - Hydraulic Fluid, Catapult.
MIL-N-25027 - Nut, Self-Locking, 250°F, 450°F, and 800°F, 125 KSI FTU, 60 KSI FTU, and 30 KSI FTU.
MIL-F-27656 - Filter Unit, Fluid, Pressure MXU-408/M, Absolute 5 Micron, Hydraulic.
MIL-I-45932 - Insert, Screw Thread, Thin Wall, Locked In: General Specification for.
MIL-I-45932/1- Insert, Screw Thread-Thin Wall, Locked In.
MIL-R-83248 - Rubber, Fluorocarbon Elastomer, High Temperature, Fluid, and Compression Set Resistant.
MIL-R-83248/1- Rubber, Fluorocarbon Elastomer, High Temperature, Fluid, and Compression Set Resistant, O-Rings, Class 1, 75 Hardness.
MIL-R-83248/2- Rubber, Fluorocarbon Elastomer, High Temperature, Fluid, and Compression Set Resistant, O-Rings, Class 2, 90 Hardness.

STANDARDS

MILITARY

MIL-STD-129 - Marking for Shipment and Storage.
MIL-STD-167-1- Mechanical Vibration of Shipboard Equipment (Type I - Environmental and Type II - Internally Excited).
MIL-STD-278 - Fabrication Welding and Inspection; and Casting Inspection and Repair for Machinery, Piping and Pressure Vessels in Ships of the United States Navy.
MIL-STD-438 - Schedule of Piping, Valves, Fittings, and Associated Piping Components for Submarine Service.
MIL-STD-1186 - Cushioning, Anchoring, Bracing, Blocking and Waterproofing; With Appropriate Test Methods.
MIL-STD-1251 - Screws and Bolts Preferred for Use in Military Material.
MIL-STD-1651 - Insert Arrangements for MIL-C-5015, MIL-C-22992 (Classes C, J, and R), and MIL-C-83723 (Series II) Electrical Connectors.

MS3102	- Connector, Receptacle, Electric, Box Mounting, Solder Contacts, AN Type.
MS16142	- Boss, Gasket Seal Straight Thread Tube Fitting, Standard Dimensions for.
MS24678	- Screw, Cap, Socket Head, Hexagon, Drilled Alloy Steel, Cadmium Plated (UNF-3A).
MS28774	- Retainer, Packing Backup, Single Turn, Tetrafluoroethylene.
MS33540	- Safety Wiring and Cotter Pinning, General Practices for.

(Copies of specifications and standards required by contractors in connection with specific acquisition functions should be obtained from the contracting activity or as directed by the contracting officer.)

2.2 Other publications. The following documents form a part of this specification to the extent specified herein. The issues of the documents which are indicated as DoD adopted shall be the issue listed in the current DoDISS and the supplement thereto, if applicable.

AMERICAN NATIONAL STANDARDS INSTITUTE (ANSI)

B16.5 - Steel Pipe Flanges and Flanged Fittings (Including Ratings For Class 150, 300, 400, 600, 900, 1500, and 2500). (DoD adopted)
Y32.10 - Graphic Symbols For Fluid Power Diagrams. (DoD adopted)
Y14.5 - Dimensioning and Tolerancing.

(Application for copies should be addressed to the American National Standards Institute, 1430 Broadway, New York, NY 10018.)

AMERICAN SOCIETY OF MECHANICAL ENGINEERS (ASME)

Boiler and Pressure Vessel Code
Section VIII - Pressure Vessels

(Application for copies should be addressed to the American Society of Mechanical Engineers, 345 East 47th Street, New York, NY 10017.)

AMERICAN SOCIETY FOR TESTING AND MATERIALS (ASTM)

B 150 - Aluminum Bronze Rod, Bar, and Shapes.

(Application for copies should be addressed to the American Society for Testing and Materials, 1916 Race Street, Philadelphia, PA 19103.)

NATIONAL FLUID POWER ASSOCIATION (NFPA)

T2.6.1 - Method for Verifying the Fatigue and Static Pressure Ratings of the Pressure Containing Envelope of a Metal Fluid Power Component.

(Application for copies should be addressed to the National Fluid Power Association Inc., 3333 North Mayfair Road, Milwaukee, WI 53222.)

NATIONAL MOTOR FREIGHT TRAFFIC ASSOCIATION, INC., AGENT

National Motor Freight Classification

(Application for copies should be addressed to the National Motor Freight Traffic Association, Inc., ATA TRAFFIC Dept., 1616 "P" Street, N.W., Washington, DC 20036.)

SOCIETY OF AUTOMOTIVE ENGINEERS (SAE)

AS 568 - Aerospace Size Standard For O-Rings.
ARP 901 - Bubble-Point Test Method.

(Application for copies should be addressed to the Society of Automotive Engineers, 400 Commonwealth Drive, Warrendale, PA 15096.)

UNIFORM CLASSIFICATION COMMITTEE AGENT

Uniform Freight Classification Ratings, Rules and Regulations

(Application for copies should be addressed to the Uniform Classification Committee Agent, Tariff Publication Officer, Room 1106, 222 South Riverside Plaza, Chicago, IL 60606.)

(Industry association specifications and standards are generally available for reference from libraries. They are also distributed among technical groups and using Federal agencies.)

2.3 Order of precedence. In the event of a conflict between the text of this specification and the references cited herein, the text of this specification shall take precedence.

3. REQUIREMENTS

3.1 Qualification. The filter assemblies, elements, and differential pressure indicators furnished under this specification shall be products which are qualified for listing on the applicable qualified products list at the time set for opening of bids (see 4.3 and 6.3).

3.2 Design and construction.

3.2.1 Filter assemblies (element and housing) shall be of such design and construction that the elements may be removed for service and examination without disconnecting fittings or disturbing mountings. Filter assemblies shall be so designed that fluid entering the filter housing cannot impinge directly upon the element filter medium.

3.2.2 Filter assemblies shall be of the full-flow type. The flow through the filter shall be from "outside-in".

3.2.3 The design of filter assemblies shall be such that the filter element cannot be installed reversed.

3.2.4 Filter housings shall withstand the structural loads imposed by the tests (see 4.3). In addition, the filter housing and mountings shall be of such strength and rigidity as to withstand the wrench loads required for making tube connections and the replacing of filter elements.

3.2.5 Types 1N and 1R filter assemblies shall utilize a single filter element. Type 1R assembly shall be the same as the type 1N assembly except for the incorporation of a bypass-relief valve, which will automatically bypass fluid around the element when the differential pressure reaches the specified value (see 3.4.3).

3.2.6 Type 2N filter assemblies shall be in accordance with the operational schematic shown on figure 5. The design shall include the two separate filtration circuits with a 3-way, 3-position, directional-control valve. The valve shall permit switching from one filtration circuit to the other to allow servicing of either circuit, without interrupting flow. A third valve position shall permit flow through both filtration circuits in parallel.

3.2.7 Type 2R filter assemblies shall be in accordance with the operational schematic shown on figure 6 and shall be similar to the type 2N filter except that assembly shall also include a bypass-relief valve which will automatically bypass fluid around the filter elements when the differential pressure reaches the specified value (see 3.4.3).

3.2.8 Type 3N and 3R filter assemblies shall incorporate three elements in a single housing. The type 3R assembly shall be the same as the type 3N assembly except for the incorporation of a bypass-relief valve which will automatically bypass fluid around the elements when the differential pressure reaches the specified value (see 3.4.3).

3.2.8.1 Type 3N and 3R filter assemblies shall be designed and constructed in accordance with part UG of the ASME Boiler and Pressure Vessel Code, Section VIII, Division 1. Failure of any one bolt or locking element in the head closure shall not result in the failure of other elements and the release of the closure or parts of the closure. The closure design shall permit visual external observation to insure that the holding elements are in good condition and are in full engagement when the closure is in the closed position.

3.2.9 Filter assemblies shall be limited to the types, classes, fatigue ratings and indicators shown below and porting configuration for each type assembly shall be as shown on the applicable figure.

Assembly type	Assembly class	Fatigue rating	Indicator style	Rated flow (gal/min)	Figure number
1N and 1R	AP	0, 3, and 4	G, M, and E	35	8
1N and 1R	BP	0, 3, and 4	G, M, and E	50	8
1N and 1R	CP	0, 3, and 4	G, M, and E	20	8
2N and 2R	BF	0, 3, and 4	G, M, and E	100	9
3N and 3R	BF	0	G, M, and E	150	7

The rated flows for the filter assemblies are based on the use of fluids in accordance with MIL-L-17331. When used with fluids of lower viscosities, the filter assemblies may be rated for higher flows.

3.2.10 Mounting. The design shall include provisions for solid mounting of the filter assemblies. The mounting provisions shall meet the shock requirements of 3.5.2.

3.2.11 The internal elements of all types of filter assemblies such as check valves, indicators, and relief valves, shall permit repair or replacement without replacement of the filter housing or manifold. Internal valves shall have replaceable seats.

3.2.12 Welding and allied processes. Welding and allied processes shall be in accordance with the requirements of MIL-STD-278 for the housing pressure vessel or structural welds, as applicable.

3.2.13 Tapered pipe thread connections shall not be permitted.

3.2.14 Filter bowls of type 1N, 1R, 2N, and 2R assemblies shall be equipped with a drain plug to minimize spillage and square wrench flats, to facilitate bowl removal during element replacement. The type 3N and 3R assemblies shall be provided with a drain plug to minimize oil spillage during element replacement.

3.2.15 Threaded fasteners shall be in accordance with the requirements of MIL-STD-1251. Studs shall be in accordance with style a of MIL-S-1222 with NC 5 tap end thread and UNC 3 nut end thread, except that style c stud threads may be utilized with stud-lock thread inserts capable of providing a class 5 interference fit. Studs and through bolting shall utilize self-locking nuts in accordance with MIL-N-25027.

3.3 Materials.

3.3.1 Metals used in the construction of the assemblies which are not of a corrosion-resisting type, or are not in constant contact with the hydraulic fluid, shall be protected against corrosion. Except for filter elements, aluminum alloy parts shall be anodized in accordance with MIL-A-8625, unless an alternative protective coating is specifically approved by the Naval Sea Systems Command (NAVSEA). The materials used, which are in contact with the hydraulic fluid, shall not adversely affect or be affected by the operating fluid. Cadmium or zinc plating shall not be used for surface protection. The manifold and filter bowls shall be selected from the following materials:

(a) 70-30 copper-nickel in accordance with MIL-C-15726 or type I of MIL-C-20159.
(b) Composition type 18-8 austenitic stainless steel (AISI types 302, 303, 304, 304L, 316, 316L).
(c) Nickel aluminum bronze in accordance with ASTM B 150, alloy C63200.
(d) Nickel-copper alloy in accordance with QQ-N-281.
(e) Aluminum alloys 2024-T6, 2024-T8, 7075-T73, or 6061-T6. Where available and compatible with the manufacturing process, mechanically stress relieved tempers of these alloys shall be used. Welding of any of the aluminum alloys is not allowed.
(f) Other materials as specifically approved by NAVSEA.

Where threaded connections are used between the filter bowl and housing, the thread design and materials shall be selected to prevent galling. The bowl and head shall be either constructed of dissimilar materials which do not gall when in contact, or of similar materials which have a hardness difference of at least 45 Brinell points. Plating or coating threads to achieve hardness difference shall not be permitted. The entering ends of the bowl and housing threads shall incorporate a "blunt start" in which the partial thread at the entering end is removed to prevent crossing of threads during assembly. Flange-type mounting to connect the filter bowl to the filter housing shall not be permitted.

3.3.2 If the filter element is of the type wherein resinous or other material is used for elimination of imperfections, materials used shall be compatible with the hydraulic fluid, and not more than 2 percent of the filtering area shall be covered by the applied material. Filter element media having an initial bubble point of less than 3 inches of water before repair shall be cause for rejection (see 4.7.2.1). After repair, the minimum bubble point on production elements shall be as specified in 4.7.2.1.3. The manufacturer's drawings shall specify the limitations or process controls that will govern manufacturing variations in media obstruction due to braze wicking, seam width, and crimp length, in addition to the existing limits on repair.

3.3.3 Seals shall be synthetic rubber in accordance with MIL-R-83248, class 1, and MIL-R-83248/1, except that straight thread boss seals shall be in accordance with MIL-R-83248, class 2, and MIL-R-83248/2. Unless otherwise permitted in accordance with MIL-G-5514 or specified herein (see figure 11), O-ring seals, except the filter element-filter assembly seal, shall be provided with back-up rings of material in accordance with MIL-R-8791. Gland design shall be in accordance with MIL-G-5514, except that the minimum and maximum dimensions of the groove corner radius may each be increased by 0.010 inch, to reduce notch sensitivity of the gland.

3.3.4 Filter element materials shall be compatible with fluid containing up to 5 percent water, which shall not result in degradation of element performance.

3.3.4.1 Compatibility. Filter elements shall be constructed of materials that are compatible with fluids in accordance with MIL-H-19457, type I, MIL-H-22072, and MIL-L-17331 (see 4.7.2.8).

3.3.5 Corrosion-resistant steel inserts in accordance with MIL-I-45932 and MIL-I-45932/1 or MIL-I-8846 shall be provided for holes tapped in aluminum parts for threaded screws and bolts. Tapped holes, to accommodate inserts, shall conform to the dimensional requirements of the respective insert specification. Inserts shall be of sufficient length to develop the full strength of the fastener. Inserts are not required for threaded bosses for AN or MS fittings or for threaded connections used between the filter bowl and housing.

3.3.6 Element covering. Elements shall be constructed with an outer wrap of metal screen or perforated metal, to protect the filter media pack from damage during handling.

3.3.7 Recovered materials. Unless otherwise specified herein, all equipment, material, and articles incorporated in the products covered by this specification shall be new and shall be fabricated using materials produced from recovered materials to the maximum extent practicable without jeopardizing the intended use. The term "recovered materials" means materials which have been collected or recovered from solid waste and reprocessed to become a source of raw materials, as opposed to virgin raw materials. None of the above shall be interpreted to mean that the use of used or rebuilt products is allowed under this specification unless otherwise specifically specified.

3.4 Protective and control devices.

3.4.1 Differential pressure indicators. Filter assemblies shall be equipped with differential pressure indicators. Type 2N and 2R assemblies shall have an indicator for each element. Indicators shall be installed with 1/4-inch diameter socket head cap screws selected from MIL-STD-1251, which are lockwired in accordance with MS33540. The indicators shall be mounted to the filter assembly using the porting detail shown on figure 11. The filter housing shall permit the mounting of an indicator with the maximum envelope dimensions shown on figure 10 in at least two of the four 90 degree orientations.

3.4.1.1 Gage differential pressure indicators shall have a minimum differential pressure range of 40 to 200 lb/in^2 and shall be marked in 10 lb/in^2 graduations with identifying numbers every 20 lb/in^2 between 40 and 200 lb/in^2. Gages shall not be red-lined. Gages shall withstand forward and reverse differential pressure up to 4500 lb/in^2, without any zero shift or loss of accuracy. Repeatability shall be within plus or minus 11 lb/in^2. Gage type indicators shall comply with the dimensional requirements shown on figure 10.

3.4.1.2 Mechanical differential pressure indicators shall actuate by raising a red indicator when the differential pressure across the element is 90 ± 10 lb/in^2. The indicator shall have a surge lockout so that it does not actuate for a minimum period of 5 seconds for differential pressures of 105 lb/in^2 or less. The indicator shall not inadvertently actuate under vibration of a 20 gravity shock load. Once actuated, the red indicator shall be capable of being manually reset at 3000 lb/in^2 operating pressure, without the assistance of any tool.

3.4.1.3 Electrical differential pressure indicators shall actuate by raising a red indicator and making electrical contacts at the same time when the differential pressure is 90 ± 10 lb/in^2. The indicator shall conform to the envelope and male gland dimensions shown on figure 10 for mounting in the porting detail shown on figure 11. Electrical connector shall be in accordance with MS3102R-10SL-3P. Electrical rating on single-pole, double-throw switch shall be 5 amperes (A) at 110 volts alternating current (Vac), 28 volts direct current (Vdc) (resistive) and 3A at 100 Vac, 28 Vdc (inductive). The switch shall be constructed with a removable 2-watt 6800-ohm resistor installed internally across the normally open contacts, for possible use in a supervised monitoring system. Electrical connector pins A and B, in accordance with

MIL-STD-1651, arrangement 3, shall be connected to the normally open contacts. The indicator shall have a surge lockout so that it does not actuate for a minimum period of 5 seconds for differential pressures of 105 lb/in^2 or less. The indicator shall not inadvertently actuate under vibration of a 20 gravity shock load. Once actuated, the red indicator shall be capable of being manually reset at 3000 lb/in^2 operating pressure, without assistance of any tool.

3.4.2 Bleed valve. Each filtration circuit of each filter assembly shall include a safety bleed valve to vent system pressure from the element cavities, to allow safe disassembly when servicing.

3.4.3 Bypass-relief valve. Types 1R, 2R, and 3R filter assemblies shall incorporate a relief valve to automatically bypass hydraulic fluid, in the event of excessive flow restriction through the filter elements. The relief valve shall be designed and set in accordance with the setting specified in table I.

TABLE I. Bypass-relief valve setting.

Filter types 1/	Cracking differential pressure (min) (lb/in^2)	Min reseat differential pressure (lb/in^2)	Max differential presure at rated flow 2/ (lb/in^2)
1R, 2R, 3R	150	130	200

1/ Both flow paths open on type 2 assemblies.
2/ The rated flow for each filter is identified in 3.2.9.

3.4.4 Selector valves. Three-way, 3-position, directional-control valves shall be incorporated in types 2N and 2R filter assemblies. Each valve shall incorporate a means of indicating the flow path selected. Valve levers or handles shall be provided with a latch or other mechanism, to prevent inadvertent operation. Flow shall not be shut off when shifting from one position to another. The differential pressure across the assembly during shifting shall not exceed 200 lb/in^2 with dummy elements installed, with a flow at least one-half of the housing rated flow (see 3.2.9) and an inlet pressure of 3000 lb/in^2. Maximum torque required to change under test flow conditions shall not exceed 40 foot-pounds (ft-lb).

3.4.4.1 Check valves. Types 2N and 2R filter assemblies shall incorporate check valves to prevent the reverse flow of fluid through the filtration circuits. Maximum cracking differential pressure shall be 8 lb/in^2. Leakage with the filter bowls removed and measured at both differential pressures of 5 lb/in^2 and 3000 lb/in^2 shall not exceed 2 milliliters (mL) per minute in each flow passage after completion of pressure cycle testing (see 4.7.1.7).

3.5 Performance.

3.5.1 Filter assemblies, filter housings, and filter elements shall perform satisfactorily when subjected to the examination and tests specified in 4.3 and 4.4.

3.5.2 Shock. Filter assemblies and differential pressure indicators shall meet the shock requirements of MIL-S-901, for grade A, class I equipment.

3.5.3 Fatigue rating. For fatigue rated assemblies and indicators, the fatigue rated pressure shall be the pressure which the assembly is represented to sustain 10 million times without failure in accordance with NFPA T2.6.1. The cyclic test pressure to be used shall be determined by multiplying the rated fatigue pressure by applicable test duration and the variability factors identified in NFPA T2.6.1 to obtain a 90 percent assurance level based on a 90 percent confidence level. Unless otherwise specified herein, test requirements shall be as specified in NFPA T2.6.1.

3.5.4 Burst pressure. Types 3N and 3R filter assemblies shall withstand a pressure of 1600 lb/in^2 minimum.

3.5.5 Proof pressure.

3.5.5.1 Types 1N, 1R, 2N, and 2R filter assemblies shall withstand a proof pressure of 6000 lb/in^2.

3.5.5.2 Types 3N and 3R assemblies shall withstand a proof pressure of 900 lb/in^2.

3.5.5.3 Differential pressure indicators shall withstand a proof pressure of 6000 lb/in^2.

3.5.6 Filtration. Filter elements shall remove 97 percent of the test contaminants as specified in 4.7.2.4.

3.5.7 Element structural requirements.

3.5.7.1 Elements shall withstand a differential pressure of 4000 lb/in^2 without collapse or damage, that may allow the accumulated contamination to be released downstream of the filter element.

3.5.7.2 Elements shall withstand, without damage, reverse differential pressure surges and flow to 20 lb/in^2.

3.5.7.3 Elements shall have a clean differential pressure drop of not more than 40 lb/in^2 at test flow (see 4.7.2.5.1).

3.5.8 Media migration.

3.5.8.1 There shall be no media migration from the filter element, when subjected to the vibration test specified in 4.7.2.7.2.

3.5.8.2 Elements shall withstand, without damage, the number of pressure flow cycles required by the flow fatigue test (see 4.7.2.6).

3.5.9 Housing pressure drop. The flow loss through the housing at rated flow, with dummy elements installed, shall not exceed 35 lb/in^2. The dummy elements may be designed to minimize element flow loss, but the element end caps shall be solid, except for the normal hole in the element outlet, and shall comply with the maximum envelope dimensions specified for the appropriate filter elements.

3.5.10 Vibration. The differential pressure indicators furnished under this specification shall be designed and tested to meet the requirements of MIL-STD-167-1, type I environmental vibration up to and including 50 hertz (Hz). As an alternative to MIL-STD-167-1, type I requirements, the indicators may also meet vibration requirements by vibrating the indicators in each of the three principle directions in accordance with the time, frequencies, and amplitudes in 4.7.2.7.2 and table V followed by a one hour endurance test in each direction at the highest resonant frequency noted. If no resonant frequency is noted, the endurance test shall be conducted at 50 Hz.

3.6 Interchangeability.

3.6.1 Part number of interchangeable parts. Parts having the same manufacturer's part number shall be functionally and dimensionally interchangeable.

3.6.2 Size A filter elements are for use in class AP filter assemblies and shall meet the dimensional requirements shown on figure 1.

3.6.3 Size B filter elements are for use in class BF, and BP filter assemblies and shall meet the dimensional requirements shown on figure 2.

3.6.4 Size C filter elements are for use in class CP filter assemblies and shall meet the dimensional requirements shown on figure 3.

3.6.5 Size D filter elements are for use in existing filter assemblies and shall not be used in any of the filter assemblies defined in this specification. Size D elements shall meet the dimensional requirements shown on figure 4.

3.6.6 When acquired separately, differential pressure indicators shall be provided complete with four mounting screws, in accordance with MS24678 (see 3.4.1), and the necessary O-rings and back-up rings (see figure 10).

3.6.7 Filter assemblies shall function correctly with the maximum element diameter allowed for the size element used in the assembly.

3.7 Identification.

3.7.1 Filter housing. Each filter assembly shall be clearly and permanently identified by an attached identification plate containing the following information, except that the ANSI fluid symbol may be put on a separate plate alone:

(a) Number and date of this specification.
(b) Filter assembly part number (see 1.2.1).
(c) Manufacturer's part or drawing number.

(d) Manufacturer's name or trademark.
(e) ANSI fluid symbol (see ANSI Y32.10).
(f) Relief valve setting, where applicable.

3.7.1.1 On types 2N and 2R assemblies, the three positions of the selector valve shall be clearly marked, to indicate the filtration circuit selected.

3.7.1.2 Inlet and outlet ports shall be clearly and permanently marked "IN" and "OUT", respectively.

3.7.1.3 On types 1N, 1R, 2N, and 2R assemblies, the filter bowls shall be provided with a minimum of 2 inches of knurling completely around the bowl circumference. The bowls shall be clearly and permanently marked "Hand Tighten Only".

3.7.1.4 Drain and vent ports shall be clearly and permanently marked "drain" and "vent", respectively.

3.7.1.5 Pressure-containing aluminum components of the filter assemblies shall be permanently marked on the part with the alloy and temper of the aluminum. Aluminum parts internal to the filter assembly are exempt from this marking requirement.

3.7.2 Filter element. Each filter element shall be clearly and permanently identified on the closed end. The following information shall be provided:

(a) Filter element part number (see 1.2.2).
(b) Manufacturer's part or drawing number.
(c) Manufacturer's name or trademark.
(d) Non-cleanable.

3.7.3 Differential pressure indicator. Each differential pressure indicator shall be clearly and permanently identified by an attached identification plate containing the following information:

(a) Differential pressure indicator part number (see 1.2.3).
(b) Manufacturer's part or drawing number.
(c) Manufacturer's name or trademark.
(d) For type M and type E indicators, the actuating pressure with tolerances.

3.7.4 Special marking. Each assembly shall incorporate appropriate caution or warning plates as necessary, to assure lubrication and assembly procedures that will prevent galling of threads during element replacement.

3.8 Special tools. If required, special tools shall be provided. Special tools are defined as those tools not listed in the Federal Supply Catalog. (Copies of this catalog may be consulted in the office of the Defense Contract Administration Service Management Area (DCASMA)).

3.9 Drawings. Two sets of assembly drawings shall be furnished with each new model filter and filter elements submitted for qualification tests. Unless otherwise specified (see 6.2), at least one set of assembly drawings shall be supplied with each new filter assembly delivered under this specification. Assembly drawings shall show a cutaway section of details in their normal assembly positions and shall carry part numbers of details and subassemblies. The following data shall be furnished on, or together with, the assembly drawings:

(a) Outline dimensions of the complete assembly.
(b) Dimensional location of ports, port sizes, and port identification markings.
(c) Dimensional location and size of mounting holes.
(d) Cross-sectional views showing internal flow paths.
(e) Bill of material, listing specifications, grade, and condition, or other data needed to identify the materials proposed.
(f) General notes stating complete performance data including rated flow capacity, pressure drop data, pressure ratings, filtration rating, and dirt-holding capacity.
(g) Complete dismantling procedure and description of tools needed.
(h) Any special installation or operating instruction considered necessary.
(i) Unless such information is provided in the qualification test report, filter element drawings shall include a cross sectional view with each individual component identified. Proprietary information, such as number of square inches of media or composition of media, is not required.

Dimensioning and tolerancing on drawings shall be in accordance with ANSI Y14.5.

3.9.1 After qualification approval, one set of reproducible (or microfilm) drawings shall be furnished to NAVSEA.

3.10 Workmanship. Where dimensions and tolerances may affect the interchangeability or performance of the filter, they shall be held or limited accordingly.

4. QUALITY ASSURANCE PROVISIONS

4.1 Responsibility for inspection. Unless otherwise specified in the contract or purchase order, the contractor is responsible for the performance of all inspection requirements as specified herein. Except as otherwise specified in the contract or purchase order, the contractor may use his own or any other facilities suitable for the performance of the inspection requirements specified herein, unless disapproved by the Government. The Government reserves the right to perform any of the inspections set forth in the specification where such inspections are deemed necessary to assure supplies and services conform to prescribed requirements.

4.2 Classification of inspections. The inspection requirements specified herein are classified as follows:

(a) Qualification inspection (see 4.3).
(b) Quality conformance inspection (see 4.4).

4.3 Qualification inspection. Qualification inspection shall be conducted at a laboratory satisfactory to NAVSEA. Qualification inspection shall consist of the examination and tests specified in table II.

TABLE II. Qualification inspection.

Examination and tests	Requirement paragraph	Test paragraph
Filter housings		
Examination	3.2, 3.6.1 through 3.6.5, 3.7 and 3.10	4.6
Shock	3.5.2	4.7.1.1
Housing pressure drop	3.5.9	4.7.1.3
Fatigue impulse 1/ 5/	3.5.3	4.7.1.8
Proof pressure 1/	3.5.5	4.7.1.2
Relief valve operation 2/	3.4.3	4.7.1.5.1
Selector valve operation and leakage 3/	3.4.4	4.7.1.6.1
Check valve leakage 3/	3.4.4.1	4.7.1.7
Burst pressure 4/	3.5.4	4.7.1.9
Differential pressure indicators		
Examination	3.4, 3.6.6, and 3.7.3	4.6
Shock	3.5.2	4.7.1.4
Vibration	3.5.10	4.7.1.4
Fatigue impulse	3.5.3	4.7.1.4 and 4.7.1.8
Operation	3.4.1.1, 3.4.1.2, and 3.4.1.3	4.7.1.4.2 and 4.7.1.4.3
Elements only		
Element no. 1		
Examination	3.2.1, 3.3.2, 3.6.1 through 3.6.5, 3.7.2, and 3.10	4.6
Bubble point	3.3.2	4.7.2.1
Degree of filtration 1/	3.5.6	4.7.2.4
Bubble point	3.3.2	4.7.2.1
Flow fatigue 1/	3.5.8.2	4.7.2.6
Bubble point	3.3.2	4.7.2.1
Element no. 2		
Examination	3.2.1, 3.3.2, 3.6.1 through 3.6.5, 3.7.2, and 3.10	4.6
Bubble point	3.3.2	4.7.2.1
Pressure build-up	3.5.7	4.7.2.5.1
Pressure collapse 1/	3.5.7	4.7.2.5.2
Bubble point	3.3.2	4.7.2.1 and 4.7.2.5.2

TABLE II. Qualification inspection. - Continued

Examination and tests	Requirement paragraph	Test paragraph
Element no. 3		
Examination	3.2.1, 3.3.2, 3.6.1 through 3.6.5, 3.7.2, and 3.10	4.6
Bubble point	3.3.2	4.7.2.1
Media migration	3.5.8	4.7.2.7
Bubble point	3.3.2	4.7.2.1
Reverse flow	3.5.7.2	4.7.2.5.3
Bubble point	3.3.2	4.7.2.1
Element nos. 4, 5 and 6		
Examination	3.2.1, 3.3.2, 3.6.1 through 3.6.5, 3.7.2, and 3.10	4.6
Bubble point	3.3.2	4.7.2.1
Compatibility	3.3.4.1	4.7.2.8
Bubble point	3.3.2	4.7.2.1
Additional tests	4.7.2.8.1	As required

1/ Fluid temperature and viscosity specified in 4.5.1 do not apply. Fluid in accordance with MIL-H-5606 may be used.
2/ Types 1R, 2R, and 3R assemblies only.
3/ Types 2N and 2R assemblies only.
4/ Types 3N and 3R assemblies only.
5/ Not applicable to types 3N and 3R assemblies.

4.3.1 Test specimens. Test specimens shall be identified with the manufacturer's part number. In addition, each test specimen filter element shall be marked with an individual serial number for identification.

4.3.1.1 Filter housings and differential pressure indicators. Qualification tests shall be performed on one specimen of each assembly and indicator for which qualification is desired. After completion of testing, specimen shall be permanently stamped to identify that it is not suitable for service.

4.3.1.2 Filter elements. Qualification test specimens of filter elements shall consist of one set of six elements for each size for which qualification is desired.

4.3.1.3 Assembly drawings shall be furnished with each new model filter and filter elements submitted for qualification tests (see 3.9).

4.4 Quality conformance inspection. Quality conformance inspection shall consist of the examination and tests specified in table III, conducted in the order listed. Quality conformance inspection shall be conducted on each filter housing, element, and differential pressure indicator.

TABLE III. Quality conformance inspection.

Item	Examination and tests	Requirement paragraph	Test paragraph
Filter housings	Examination	3.2, 3.6.1, 3.7, and 3.10	4.6
	Proof pressure 1/	3.5.5	4.7.1.2
	Relief valve operation	3.4.3	4.7.1.5.2
	Differential pressure indicator operation 1/	3.4.1 and 3.7.3	4.7.1.4
	Selector valve operation and leakage	3.4.4	4.7.1.6.2
	Check valve leakage	3.4.4.1	4.7.1.7
Filter elements	Examination	3.3.2, 3.6.1 through 3.6.5, 3.7.2, and 3.10	4.6
	Bubble point	3.3.2	4.7.2.1.3
Differential pressure indicators	Examination	3.4.1, 3.6.1 and 3.7.3	4.6
	Indicator operation	3.4.1	4.7.1.4

1/ Fluid temperature and viscosity specified in 4.5.1 do not apply. Fluid in accordance with MIL-H-5606 may be used.

4.5 Test condition.

4.5.1 Test fluid and fluid temperature. Unless otherwise specified (see tables II and III), the hydraulic fluid used for all tests shall conform to MIL-L-17331. Where MIL-L-17331 fluid is used for testing, the fluid temperature shall be that temperature at which the actual fluid viscosity is 100 centistokes, and the temperature shall be maintained to plus or minus 1°C. Viscosity data used to determine test temperature (approximately 37°C) shall be included in the test report.

4.6 Examination. The filter housings, differential pressure indicators, and elements shall be examined to determine compliance with the requirements specified herein with respect to design, visible defects, dimensions, marking, and workmanship.

4.7 Test methods.

4.7.1 Filter housings. Unless otherwise indicated herein, all tests shall be conducted with elements installed.

4.7.1.1 Shock. Filter assemblies and differential pressure indicators shall be subjected to a type A shock test in accordance with MIL-S-901. There shall be no evidence of damage, malfunction, or external leakage at the conclusion of the test or during subsequent tests (see 4.7.1.2 through 4.7.1.9).

4.7.1.2 Proof pressure. A proof pressure as specified in 3.5.5 shall be applied to the filter housing and held for 2 minutes. For qualification, this test shall be performed after completion of shock and impulse tests.

4.7.1.3 Housing pressure drop. This test shall be conducted with a dummy element installed as specified in 3.5.9. Using the test fluid, the maximum pressure drop between the inlet and outlet of the filter housing at rated flow shall not exceed 35 lb/in^2. Rated flow for each filter shall be as specified in 3.2.9.

4.7.1.4 Differential pressure indicators. Differential pressure indicators shall be subjected to the shock test (see 4.7.1.1), fatigue impulse test (see 4.7.1.8), proof pressure test (see 4.7.1.2), and vibration test. The differential pressure indicators shall be subjected to a vibration test as specified in 3.5.10. For this test, inlet pressure shall be between 2700 and 3000 lb/in^2 and outlet pressure between 50 and 150 lb/in^2. There shall be no evidence of damage, malfunction, or external leakage at the conclusion of the vibration test, or during subsequent tests. Proof pressure test shall be performed after shock, vibration, and impulse tests.

4.7.1.4.1 For gage differential pressure indicators, the gage shall also be subjected to forward and reverse differential pressures to 4500 lb/in^2. Differential pressure shall be maintained at 4500 lb/in^2 for 1 minute. After all tests, including shock, impulse, vibration, and proof, the gage shall read within plus or minus 11 lb/in^2 in the differential pressure range of 40 to 140 lb/in^2 and shall be tested in both the ascending and descending pressure modes of operation at 20 lb/in^2 intervals from 40 to 140 lb/in^2, inclusive. An indicator response time of less than 20 seconds for a 100 lb/in^2 change in pressure shall be demonstrated. For quality conformance, accuracy of each indicator shall be verified at 40, 90, and 140 lb/in^2 in both ascending and descending pressure modes.

4.7.1.4.2 For qualification testing, the mechanical differential pressure indicators shall be tested for operation with the inlet port isolated and outlet pressurized to 3000 lb/in^2. The inlet pressure shall be increased slowly until the pressure indicator actuates. The actuation pressure shall be 90 $\pm$ 10 lb/in^2 higher than the outlet pressure. At 3000 lb/in^2, a differential pressure of 105 lb/in^2 of 5 seconds duration shall not cause the indicator to actuate. After actuation, the indicator shall stay actuated in the extended position through the pressure range to 4500 lb/in^2. With the inlet pressurized to 4500 lb/in^2, the indicator shall remain in the extended position while the outlet pressure is reduced to zero. Differential pressure shall be maintained at 4500 lb/in^2 for 1 minute. The indicator shall then be manually depressed to the normal reset position at differential pressures of 3000, 1500, 500, 150, and 75 lb/in^2 without the use of any tool. At a differential pressure of 75 lb/in^2, the indicator shall remain in the reset position. The above operational tests shall be performed after completion of shock, impulse, vibration, and proof tests. For quality conformance, the actuation pressure of each indicator shall be verified to be 90 $\pm$ 10 lb/in^2 higher than the outlet pressure.

4.7.1.4.3 For qualification testing, the electrical differential pressure indicators shall be tested for operation in accordance with 4.7.1.4.2. During operational tests, verify that the electrical contacts trip in conjunction with the actuation and reset of the red indicator (see 3.4.1.3). For quality conformance, the actuation pressure of each indicator shall be verified to be 90 $\pm$ 10 lb/in^2 higher than the outlet pressure for both the red indicator and electrical switch.

4.7.1.5 Relief valve operation.

4.7.1.5.1 Relief valve (qualification). Types 1R, 2R, and 3R assemblies shall be tested for relief valve operation. Prior to this test, a means of stopping flow through the filter element(s) shall be installed. Pressure shall be applied to the inlet port of the filter at 80 percent of cracking pressure by means of a power-driven pump and shall be increased in increments of 10 lb/in^2 or less, until the cracking pressure of the relief valve is reached. The pressure shall be held constant for 5 minutes at each increment and leakage rate noted for the last 3 minutes. The pressure at which the leakage rate through the relief valve is 10 mL per minute shall be the cracking pressure which shall be in accordance with table I. The pressure shall be increased until rated flow (see 3.2.9) is obtained through the relief valve. Rated flow shall occur at a differential pressure less than the maximum specified in table I. The pressure shall then be reduced in 10 lb/in^2 increments until leakage through the valve does not exceed 8 cm^3 per minute. This pressure shall be considered the relief valve reseat pressure and shall meet the requirements of table I.

4.7.1.5.2 Relief valve (quality conformance). Each type 1R, 2R, and 3R assemblies shall be tested for conformance with leakage requirements at cracking pressure (see table I).

4.7.1.6 Selector valve operation and leakage (type 2N and 2R assemblies only).

4.7.1.6.1 Selector valve (qualification). The torque or force to operate the selector valve shall be measured for all positions. Seal tightness shall be checked at 3000 lb/in^2 differential pressure for the positions in which one filter bowl is isolated. The selector valve shall then be operated 200 cycles with a flow not less than one half the housing rated flow (see 3.2.9). During shifting of the selector valve from one position to another, flow shall not be cut off and the differential pressure across the assembly shall not exceed 200 lb/in^2 with dummy elements installed and an inlet pressure of 3000 lb/in^2. After 200 cycles, the torque and leakage tests shall be repeated. The torque before and after the cycling test shall not exceed that specified in 3.4.4. Leakage measured with the bowl of the isolated filter removed shall not exceed 6 mL per minute for the isolated flow paths, either before or after the cycling test, and shall not increase by more than 50 percent, as a result of the cycling test.

4.7.1.6.2 Selector valve (quality conformance). Valve operating torque and selector valve leakage shall be checked and shall meet the test specified in 4.7.1.6.1. The cycling test is not required.

4.7.1.7 Check valve cracking pressure and leakage (qualification) (type 2N and 2R assemblies only). Cyclic testing shall be conducted with the selector valve alined so that only one filter bowl is on-line. With the filter outlet at 3000 lb/in^2 minimum and fluid flowing at one-half the rated flow of the assembly, the filter inlet shall be subjected to 5000 repetitions of rapid decompression and rapid repressurization. At the completion of testing, cracking pressure and internal leakage shall be determined for both check valves. Maximum cracking differential shall be 8 lb/in^2. Internal leakage in the flow checked direction shall be measured at a differential pressure of 5 lb/in^2 and at 3000 lb/in^2. Leakage measured with both filter bowls removed shall not exceed 2 mL per minute in each flow passage at either a differential pressure of 5 lb/in^2 or 3000 lb/in^2. The differential pressure shall be held for 5 minutes. When determining leakage, fluid shall be no cooler than that temperature required for a fluid viscosity of 100 centistokes. If both installed check valves are not identical in design and construction, the cyclic test shall be repeated with the other bowl on-line. Replacement of check valve internals prior to this repeat test is allowed. Cracking pressure and leakage determinations shall be repeated and meet the above requirements.

4.7.1.7.1 Check valve cracking pressure and leakage (quality conformance). Check valve cracking pressure and leakage shall be checked and shall meet the requirements specified in 4.7.1.7. The cycling test is not required.

4.7.1.8 Fatigue impulse test. For assemblies and indicators with a rated fatigue pressure, the fatigue pressure rating shall be verified with a test as specified in 3.5.3. A photograph showing the actual impulse curve, as indicated by oscilloscope (or equivalent method), shall be included in the qualification test report.

4.7.1.8.1 At the conclusion of the shock, fatigue impulse, and proof tests, the filter housing shall be subjected to and shall pass the tests specified in 4.7.1.4, 4.7.1.5, 4.7.1.6, and 4.7.1.7.

4.7.1.9 Burst pressure. A burst pressure as specified in 3.5.4 shall be applied to the filter housing. The actual burst pressure shall be recorded.

4.7.2 Filter elements.

4.7.2.1 Bubble point. Filter elements shall be tested to determine the initial bubble point. The filter element, containing no fluid, shall be installed in a setup similar to that identified in ARP 901. The fluid level shall be maintained at approximately one-half inch above the top of the filter element. Unless otherwise specified herein, the bubble-point test procedure shall be in accordance with ARP 901. The manometer reading in inches of water corresponding to the first bubble shall be recorded. The standard referee test liquid shall be reagent grade isopropanol (isopropyl alcohol) having a surface tension of 21.15 $\pm$ 0.10 dynes/cm at 25°C. However, the test liquid may be commercial grades of isopropanol, proprietary solvent No. 3 (U.S. Industrial Chemicals) or other brands of denatured ethanol used by the manufacturer for bubble point testing of production elements. The test fluid and its surface tension shall be identified. For test liquids other than isopropanol, the bubble point pressure shall be corrected for surface tension in accordance with ARP 901 and the standard bubble point reported in the qualification test report. The bubble point test shall be accomplished within 10 minutes of the immersion of the filter element.

4.7.2.1.1 Test point values. The initial bubble point value of the six qualification test elements of each size shall be determined prior to further testing. The minimum initial bubble point pressure for each production element will be established based on the bubble points of the qualification test elements. The minimum bubble point established shall be 90 percent of the minimum bubble point of the qualification test element with the lowest bubble point, but shall be not less than 4.5 inches.

4.7.2.1.2 Test elements. Normally, the degree of filtration test (see 4.7.2.4) shall be performed on the element with the lowest bubble point, and the pressure build-up and collapse test (see 4.7.2.5) shall be performed on the element with the highest bubble point in the test liquid. Where bubble points will be determined after a specific qualification test, the bubble point prior to and after the test shall be conducted in the fluid used for the specific test. Variation in the selection of elements for specific test or sequence of tests may be made at the discretion of NAVSEA or its representative.

4.7.2.1.3 Unless otherwise specified herein, for quality conformance, the filter element, containing no fluid, shall be bubble point tested in accordance with ARP 901. The liquid level shall be maintained at approximately one-half inch above the top of the filter element. The air pressure shall be preset to 0.1 inch of water less than the minimum inital bubble point. The filter element shall be rotated 360 degrees about its longitudinal axis and the entire filter area scanned for the appearance of any bubbles. There shall be no bubbles emerging from the filter. For bubble point of production elements, the minimum initial bubble point shall be determined as specified in 4.7.2.1.1. If the surface tension of the production test liquid is different from that of the liquid used for qualification, the minimum bubble point shall be calculated based on the standard bubble point reported in the qualification test report using the criteria specified in 4.7.2.1.1 and corrected for surface tension in accordance with ARP 901.

4.7.2.2 Determination of test fluid cleanliness. A determination of test fluid cleanliness shall be made. The procedure shall be as follows:

(a) Flush 2000 mL of the prefiltered fluid through the contaminant mixing chamber (see figure 12) and the filter test housing at a rate of 20 to 40 gal/min and collect the fluid in a clean container.

(b) The weight of the contaminant collected will be the blank value (B) used in calculating the efficiency. (For tests conducted by the Government, the blank value (B) shall not exceed 0.002 grams (g).)

4.7.2.3 Efficiency The filter element shall remove 97 percent by weight of the specified contaminant add value as determined by the following efficiency formula:

$$\text{Percent removal} = \frac{(A-B+.002)-C}{(A-B+.002)} \times 100$$

Where: A = (add value) = Amount of test contaminant passed through system when there is no filter element in the housing. Add value cannot exceed weight of contaminant added.

B = (blank value) = Amount of contaminant attributed to the test system and filter test assembly when no test contaminant has been added.

C = (contaminant value) = Amount of test contaminants passed through test filter assembly with element installed.

4.7.2.3.1 Determination of system add value for Government conducted tests. When tests are conducted at a Government facility or by the Government for verification, the test specified in 4.7.2.4 shall be conducted two times without the filter element installed. The add value (A) used in calculating efficiency shall be the average of the two runs and the contaminant collected in each of the runs shall be not less than 95 percent by weight of the contaminant introduced.

4.7.2.3.2 Determination of system add value for tests conducted by the filter manufacturer or his designated facilities. The test specified in 4.7.2.4 shall be conducted two times without the filter element installed. The add value (A) to be used in calculating efficiency shall be the weight of the contaminant collected for the run in which the minimum contaminant was collected and shall not be less than 90 percent by weight of the contaminant introduced. In lieu of two runs, an add value (A) of 90 percent may be used based on a single run in which the add value exceeded 95 percent by weight of the contaminant introduced.

4.7.2.4 Degree of filtration. The degree of filtration for filter elements shall be determined by the test specified herein. It is of primary importance that the hydraulic fluid and air used in the degree of filtration test be clean and filtered prior to test. A degree of filtration circuit similar to that shown on figure 12 with an in-line assembly, to contain the test element, shall be used. Test procedure shall be as follows:

(a) A setup shall be made as shown on figure 12 without installing the filter element in the test housing.
(b) Flush 2000 mL of prefiltered hydraulic fluid through the contaminant mixing chamber and the filter housing at a rate of 20 to 40 gal/min, and discard. This operation shall be repeated.
(c) The hydraulic fluid shall be checked in accordance with 4.7.2.2.
(d) Valve B (see figure 12) shall be closed.
(e) Add 2000 mL of previously filtered hydraulic fluid through plug valve A (see figure 12). The element shall be installed in the filter housing.

(f) A 25 mL slurry containing the amount of contaminant specified in table IV shall be added to the hydraulic fluid through a small funnel inserted in the plug valve A. The contaminant shall be APM F-9 beads. Additional fluid shall be used as necessary, to wash down the funnel.

(g) The contaminant shall be distributed uniformly by churning the hydraulic fluid with an agitator for 3 minutes.

(h) Plug valve A shall be closed and the glass chamber containing the hydraulic fluid and contaminant shall be pressurized, using the air regulator. The air regulator is used to maintain flow.

(i) Valve B shall be opened and air pressure shall force the hydraulic fluid, containing the contaminant, through the sample filter assembly at a rate of 20 to 40 gal/min. This filtrate shall be collected in a clean 5000 mL container. Using a wash bottle, 750 mL of prefiltered solvent compatible with the filter membrane shall then be washed through the contaminant mixing chamber and test filter assembly. The wash fluid shall be collected in the same 5000 mL container.

(j) All hydraulic fluid and wash fluid passed through the test filter shall be filtered through a membrane filter disc, 47 millimeters (mm) diameter, absolute 0.8 micrometer, type AA Millipore, or equal, which has been previously washed with prefiltered solvent, dried to a constant weight by heating for 30 minutes at 50°C, and cooling for 30 minutes in a desiccator, and weighed to 0.10 milligram (mg) accuracy.

(k) The 5000 mL container shall be washed with at least 1000 mL of prefiltered solvent. This wash shall also be passed through the filter membrane using a vacuum (minimum 25 inches of mercury).

(l) The membrane filter disc and assembly shall be washed down with prefiltered solvent as necessary, to insure that all contaminants are trapped on the filter disc.

(m) With solvent washing completed and all wash fluid passed through the filter disc, it shall be dried to a constant weight and weighed to 0.10 mg accuracy.

TABLE IV. Amount of contaminants for pressure build-up and efficiency tests.

Element Size	Test flow gal/min	Pressure build-up		Efficiency
		Contaminant added (A-C dust)(g)	Min weight of dust at 90 lb/in^2	APM F-9 glass beads (g)
A (see figure 1)	50	3.5	21	3.5
B (see figure 2)	50	5.0	50	4.0
C (see figure 3)	50	2.5	15	2.5
D (see figure 4)	20	2.5	15	2.5

4.7.2.4.1 The difference between the membrane filter weights before and after the procedure specified in 4.7.2.4 is the weight of contaminant passing through test filter B in the formula specified in 4.7.2.3.

4.7.2.5 Pressure build-up and collapse pressure.

4.7.2.5.1 Filter element pressure drop. With the element in a test housing, standardized air cleaner (A-C) fine test dust shall be added immediately upstream of the filter element at 4-minute intervals. An acceptable pressure build-up and collapse test setup, with cleanup devices installed, is shown on figure 13. The amount of dust added at each interval shall be as specified in table IV. The temperature of the test fluid shall be maintained as specified in 4.5.1. Pressure differential, flow, and temperature shall be recorded 2 minutes after each dust addition. The pressure differential at test flow (see table IV) shall not exceed 40 lb/in^2 for a clean element and shall not exceed 90 lb/in^2 after the specified amount of dust has been added. Additional dust shall be added until either a differential pressure of 150 lb/in^2 is obtained across the element at test flow or until twice the minimum weight of test dust has been added. Fluid flow shall not be interrupted during pressure buildup testing. Add intervals, amount of dust added, and pressures shall be included in the test report. Curves showing the differential pressure across the element versus weight added in g of A-C fine test dust shall be included in the test report. Cleanup filters are allowed in the test stand during pressure build-up testing, at the manufacturer's facilities. When testing is done at other than the manufacturer's facilities, cleanup filters in accordance with MIL-F-27656 shall be installed during testing.

4.7.2.5.2 Filter element collapse pressure. Standardized A-C fine or A-C coarse test dust shall be added to elements following the pressure drop test until a differential pressure across the element of at least 2000 lb/in^2 is obtained and held for 2 minutes. Additional test dust shall be added until a differential pressure of 4000 lb/in^2 is reached and held for 2 minutes. The element shall not collapse. The initial bubble point after testing shall be not less than 3 inches of water, when tested in either the element test fluid or proprietary solvent no. 3 (see 4.7.2.1).

4.7.2.5.3 Filter element reverse flow test. With at least 20 gal/min flow in the reverse direction from the element collapse test (see 4.7.2.5.2), the element shall be loaded with A-C fine or A-C coarse test dust until a differential pressure of 20 lb/in^2 is obtained across the element. The elements shall withstand the reverse flow differential pressure, without structural damage. The initial bubble point of the element after reverse flow testing shall be not less than 80 percent of the initial bubble point of the element prior to reverse flow testing. Flow may be adjusted as necessary, to maintain the differential pressure of 20 lb/in^2 for at least 3 minutes.

4.7.2.6 Flow fatigue. Filter elements shall be subjected to pressure flow cycles with hydraulic fluid. A cycle shall consist of increasing the differential pressure across the filter element from zero to the pressure specified below and back to zero by first increasing, then decreasing, the flow through the test filter element which has been loaded with A-C fine or A-C coarse dust, or equivalent. The cycling rate shall not exceed 300 c/m. The number of cycles at each differential pressure shall be as follows:

Style N elements:
45,000 cycles at 100 lb/in^2 pressure drop
5,000 cycles at 300 lb/in^2 pressure drop

There shall be no evidence of damage as a result of this test, and after testing, the element initial bubble point shall be not less than 80 percent of the initial bubble point of the element prior to testing.

4.7.2.7 Media migration and vibration analysis of filter elements.

4.7.2.7.1 Preparation for analysis. The test element shall be installed in a filter housing or a special test housing with blanking connections installed. The housing shall be filled with prefiltered hydraulic test fluid.

4.7.2.7.2 Vibration test. The filter housing head shall be secured to the testing machine such that the vibration input is centrally alined along the longitudinal axis of the filter element. The equipment shall be vibrated from 4 Hz (or lowest attainable frequency) to 50 Hz in discrete frequency intervals of 1 Hz, at the amplitudes shown in table V. At each frequency, the vibration shall be maintained for times shown in table V. An acceptable alternative will be a continuous sweep from 4 Hz to 50 Hz, over a period of at least 1 hour, with the amplitudes shown in table V.

TABLE V. Vibratory displacement single amplitude.

Frequency range (Hz)	Table amplitude 1/ (inches - minimum)	Time (minutes)
4 to 15	0.05	2
16 to 25	.04	1
26 to 33	.03	1
34 to 40	.02	1
41 to 50	.01	1

1/ For Government conducted tests, the maximum amplitude shall not exceed the minimum required amplitude by more than 20 percent.

4.7.2.7.3 Media migration analysis. The port blanks shall be removed and the filter and housing shall be flushed with 3000 mL minimum of prefiltered fluid and the effluent collected. The effluent shall be filtered through a membrane filter disk, 47 mm diameter, absolute 0.8 micrometer, type AA Millipore, or equal, which has been previously washed with prefiltered solvent. The membrane from this analysis and the membrane retained from the degree of filtration test (see 4.7.2.4) shall be examined for evidence of filter media migration. There shall be no media migration identifiable as coming from the filter element medium.

4.7.2.8 Compatibility of elements with fluids. Elements nos. 4, 5 and 6 shall be tested for compatibility with fluids in accordance with MIL-H-19457, MIL-H-22072 and MIL-L-17331. One patch (four required; each approximately 2 inches by 4 inches) of the filtration media shall also be tested for compatibility with each of the above fluids. An untested fourth patch shall be retained for microscopic comparison with the immersed patches on completion of the tests. Test patches shall be taken from a single representative specimen of filtration media (approximately 8 inches by 4 inches). Each test fluid shall be thoroughly mixed with 5 percent water prior to testing, and stirred approximately every 24 hours thereafter, weekends excepted. During

the test, water and oil may be added as necessary to make up evaporation losses. Elements and test patches shall be completely immersed in appropriate test fluids as designated above, for 195 hours at 85 to 90°C. After immersion and degreasing of the elements and patches, there shall not be any visible evidence of degradation or corrosion. Element bubble points shall be not less than 85 percent nor more than 120 percent of the bubble point at the beginning of the test. The above portion of the compatibility test shall be scheduled for completion such that examination can be accomplished in the same time frame as the other qualification tests. Patches shall be compared to the untested specimen under a microscope, and visible differences noted. Avoid skin contact with and inhalation of MIL-H-19457 and MIL-H-22072 fluids and vapors.

4.7.2.8.1 After the fluid compatibility tests, elements nos. 4, 5, and 6 may be subjected to any of the tests listed for elements nos. 1, 2, or 3 and shall satisfactorily pass those tests. Tests to be conducted and elements selected shall be at the discretion of NAVSEA or its representative. Elements not tested further shall be retained by NAVSEA for future reference.

4.8 Inspection of packaging. Sample packages and packs, and the inspection of the preservation-packaging, packing and marking for shipment and storage shall be in accordance with the requirements of section 5 and the documents specified therein.

5. PACKAGING

(The preparation for delivery requirements specified herein apply only for direct Government acquisitions. For the extent of applicability of the preparation for delivery requirements of referenced documents listed in section 2, see 6.5.)

5.1 Preservation-packaging. Preservation-packaging shall be level A or C, as specified (see 6.2).

5.1.1 Level A.

5.1.1.1 Filter assemblies and differential pressure indicators. Internal surfaces and components of filter assemblies and differential pressure indicators, in contact with hydraulic fluid, shall be cleaned to a grade A/B level ultrasonically (or by an equivalent method). Grade A/B cleanliness is defined as that degree of cleanliness which results in free flow paths and internal surfaces free of grease and oil (except approved preservatives and assembly lubricants), flux, loose particles visible to the unaided eye, oxides and tap water residues having visibly distinguishable particles, temper and oxide films resulting from heating operations which are of visible thickness, metal chips, grit, dirt, and other foreign materials which could be detrimental to the operation of hydraulic equipment. This level of cleanliness for particulate matter shall be determined by visual examination. The cleaning method utilized shall not have any deleterious effects on any material (for example, metals, plastics and elastomers). Immediately after cleaning, the units shall be dried, assembled as necessary, and unless otherwise specified (see 6.2), flushed with preservative oil conforming to MIL-H-6083, drained, and tagged (see 5.3.1). Openings shall be sealed with closures conforming to MIL-C-5501.

5.1.1.1.1 Differential pressure indicators not attached to assemblies shall be individually packaged in containers conforming to PPP-B-636. Assemblies shall be individually packed in shipping containers (see 5.2) for the level of packing specified in the contract or order. Closure of containers shall be as specified in the applicable specification or appendix thereto, with method I closure applicable for PPP-B-636 containers.

5.1.1.2 Elements. Elements shall be cleaned, air dried, and individually wrapped in barrier material conforming to grade A of MIL-B-121, or placed in a heat sealable bag conforming to class E of MIL-B-117. Barrier material shall be sealed with pressure sensitive tape conforming to PPP-T-60, type III, class 2. Preservative oil shall not be used. Each element shall be placed in a unit container conforming to PPP-B-636 or PPP-C-55, at the contractor's option, which will provide the required protection. When used, cans shall conform to type I, class 2 of PPP-C-55. Sealing and closure of unit containers shall conform to the applicable container specification, with method I closure applicable for PPP-B-636 containers.

5.1.2 Level C. Filter assemblies, differential pressure indicators, and elements shall be cleaned as specified in 5.1.1.1 and 5.1.1.2 and individually packaged to afford protection against corrosion, deterioration, and physical damage during shipment from the supply source to the first receiving activity for immediate use. The contractor's normal preservation and packaging method may be utilized when such meets the requirements of this level.

5.2 Packing. Packing shall be level A, B, or C, as specified (see 6.2).

5.2.1 General requirements for levels A and B. Cushioning, anchoring, blocking, and bracing of container contents shall be in accordance with MIL-STD-1186 and the applicable container specification and appendix thereto.

5.2.2 Level A. Filter assemblies or elements preserved and packaged as specified (see 6.2) shall be packed in containers conforming to any one of the following specifications at the option of the contractor:

Specification	Type or class
PPP-B-601	Overseas
PPP-B-621	Overseas, class 2
PPP-B-636	Weather-resistant
PPP-B-640	Class 2

Shipping containers shall be closed, strapped, or banded in accordance with the applicable container specification or appendix thereto. Unless otherwise specified (see 6.2), shipping containers shall have caseliners conforming to MIL-L-10547. Caseliners shall be closed and sealed in accordance with MIL-L-10547. Caseliners for fiberboard containers may be omitted provided all center and edge seams and the manufacturer's joint are waterproofed in accordance with the appendix to the applicable fiber box specification. Fiberboard boxes shall be reinforced with pressure-sensitive reinforced, filament tape or non-metallic banding, with method V closure applicable to PPP-B-636 boxes.

5.2.3 Level B. Filter assemblies or elements preserved and packaged as specified (see 6.2) shall be packed in containers conforming to any one of the following specifications at the option of the contractor:

Specification	Type or class
PPP-B-601	Domestic
PPP-B-621	Class 1
PPP-B-636	Domestic
PPP-B-640	Class 1

Containers shall be closed, strapped, or banded in accordance with the applicable container specification or appendix thereto, with method I closure applicable to PPP-B-636 boxes.

5.2.4 Level C. Filter assemblies or elements packaged as specified (see 6.2), shall be packed in containers acceptable to the common carrier and which will insure safe delivery at destination, in a satisfactory condition, at the lowest applicable rate. Containers, packing, or method of shipment shall comply with the Uniform Freight or National Motor Freight Classification Rules or other carrier rules, as applicable to the mode of transportation.

5.3 Marking. In addition to any special marking required by the contract or order (see 6.2), interior packages and exterior shipping containers shall be marked in accordance with MIL-STD-129 and shall include the following:

(a) Quarter and year of manufacture.
(b) Manufacturer's name or Federal Supply Code for Manufacturer's (FSCM).
(c) Standard part number (see 1.2).

5.3.1 Special marking. Preserved filter assemblies shall be tagged; the individual unit container and exterior shipping container marked or labeled with the following:

(a) Tags: "Do not disassemble. The interior of this item has been cleaned and examined to grade A/B cleanliness requirements of MIL-F-24402, and is coated with corrosion preventative compound (brand name and type or Military Specification number), manufactured by (name of company). It was installed on (date) and should be replaced one year from date if still in storage. Preservation replacement does not require disassembly of the unit. Represervation can be done by (state procedure)."

When the preservative fluid conforms to MIL-H-6083 (see 5.1.1.1), the following additional information shall be added to the tag: "Removal of residual preservative fluid prior to installation is not required."

(b) Labels of marking: "The item(s) contained herein has been cleaned and examined to grade A/B cleanliness requirements of MIL-F-24402, and is coated with corrosion preventative compound (brand name and type or Military Specification number), manufactured by (name of company). It was installed on (date) and should be replaced one year from date if still in storage. Preservation replacement does not require disassembly of the unit. Represervation can be done by (state procedure)."

5.4 Special tools. Special tools (see 3.8) shall be preserved-packaged, packed, and marked in accordance with PPP-P-40, for the intended use and destination as follows:

Destination	Preservation-packaging level	Packing level
On board (accompanying equipment)	A	C
Stock	A	B
Immediate use	C	C

The cleaning and special marking requirements of 5.1.1 and 5.3.1 shall be applied where applicable.

5.5 Cushioning, dunnage, and wrapping materials.

5.5.1 Level A preservation-packaging and levels A and B packing. Use of all types of loose-fill materials for packaging and packing applications such as cushioning, filler or dunnage is prohibited for materials destined for shipboard installation/stowage.

5.5.2 Level C preservation-packaging and packing. When loose fill type materials are used for packaging and packing applications such as cushioning, filler and dunnage, all containers (unit, intermediate, and shipping) shall be marked or labeled with the following information:

"CAUTION

Contents cushioned etc., with loose-fill material. Not to be taken aboard ship. Remove and discard loose-fill material before shipboard stowage. If required, recushion with cellulosic material, bound fiber, fiberboard or transparent flexible cellular material."

5.5.3 Cushioning, filler, dunnage, and wrapping materials selected, whenever available, shall exhibit improved performance for resistance to fire.

6. NOTES

6.1 Intended use. The filter assemblies, filter elements, and differential pressure indicators, covered by this specification, are intended for use in submarine and surface ship petroleum oil, water glycol, and phosphate ester fluid hydraulic systems. For application to systems using other than these fluids, users are cautioned to insure compatibility with filter assemblies and elements herein.

6.2 Ordering data. Acquisition documents should specify the following:

(a) Title, number, and date of this specification.
(b) Filter assembly, element, and differential pressure indicator part number (see 1.2). For type 3 assemblies, specify required inlet porting, either "LI" (as shown in figure 7) or "RI" (inlet opposite to that shown in figure 7).
(c) Filter assembly drawings (not element or indicator drawings) required (see 3.9).
(d) Levels of preservation-packaging and packing, and special marking required (see 5.1, 5.2 and 5.3).
(e) When preservative oil other than as specified is required (see 5.1.1.1).
(f) Caseliners for shipping containers if other than as specified (see 5.2.2).

6.3 With respect to products requiring qualification, awards will be made only for products which are, at the time set for opening of bids, qualified for inclusion in Qualified Products List QPL-24402 whether or not such products have actually been so listed by that date. The attention of the contractors is called to these requirements, and manufacturers are urged to arrange to have the products that they propose to offer to the Federal Government tested for qualification in order that they may be eligible to be awarded contracts or purchase orders for the products covered by this specification. The activity responsible for the Qualified Products List is Naval Sea Systems Command, SEA 3112, Department of the Navy, Washington, DC 20362 and information pertaining to qualification of products may be obtained from that activity.

6.3.1 Copies of "Provisions Governing Qualification SD-6" may be obtained upon application to Commanding Officer, Naval Publications and Forms Center, 5801 Tabor Avenue, Philadelphia, PA 19120.

6.4 Provisioning. Provisioning Technical Documentation (PTD), spare parts, and repair parts should be furnished as specified in the contract.

6.4.1 When ordering spare parts or repair parts for the equipment covered by this specification, the contract should state that such spare parts and repair parts should meet the same requirements and quality assurance provisions as the parts used in the manufacture of the equipment. Packaging for such parts should also be specified.

6.5 Sub-contracted material and parts. The preparation for delivery requirements of referenced documents listed in section 2 do not apply when material and parts are acquired by the contractor for incorporation into the equipment and lose their separate identity when the equipment is shipped.

6.6 Changes from previous issue. Asterisks are not used in this revision to identify changes with respect to the previous issue due to the extensiveness of the changes.

Preparing activity:
Navy - SH
(Project 4330-N029)

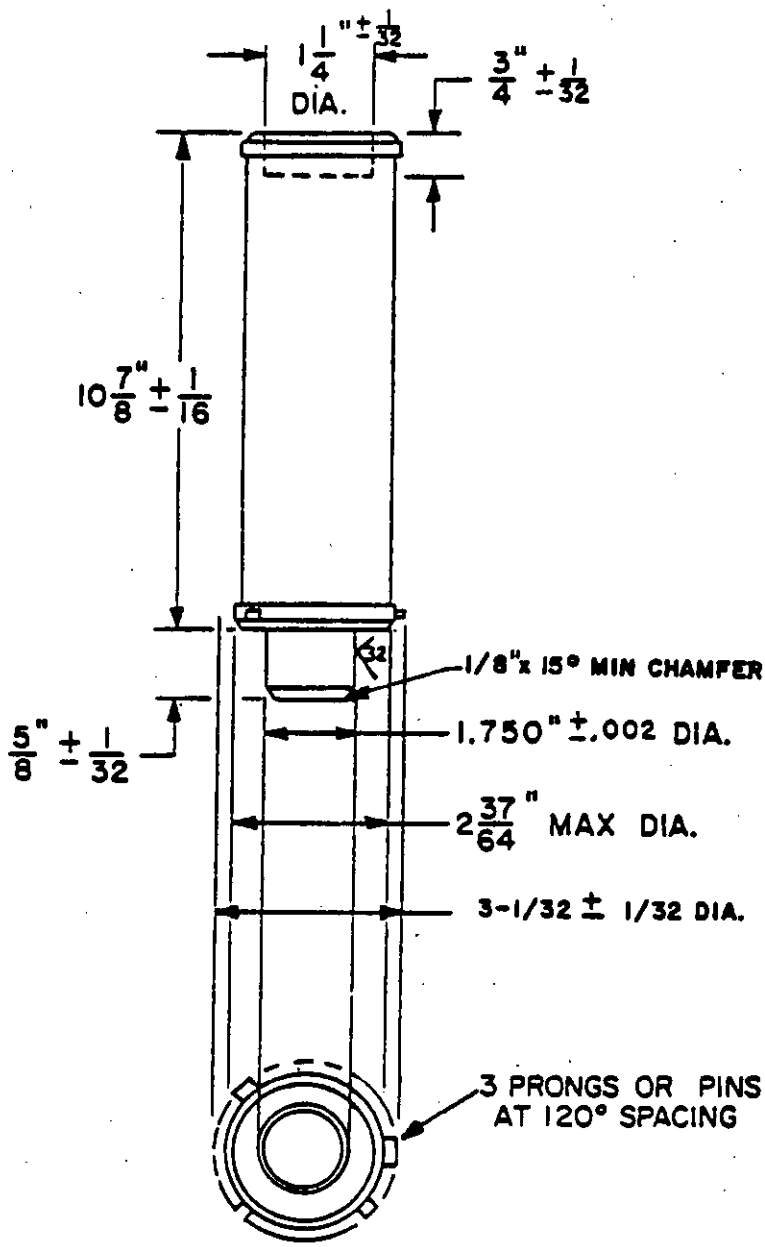

SH9855

FIGURE 1. Filter elements dimensions, size A.

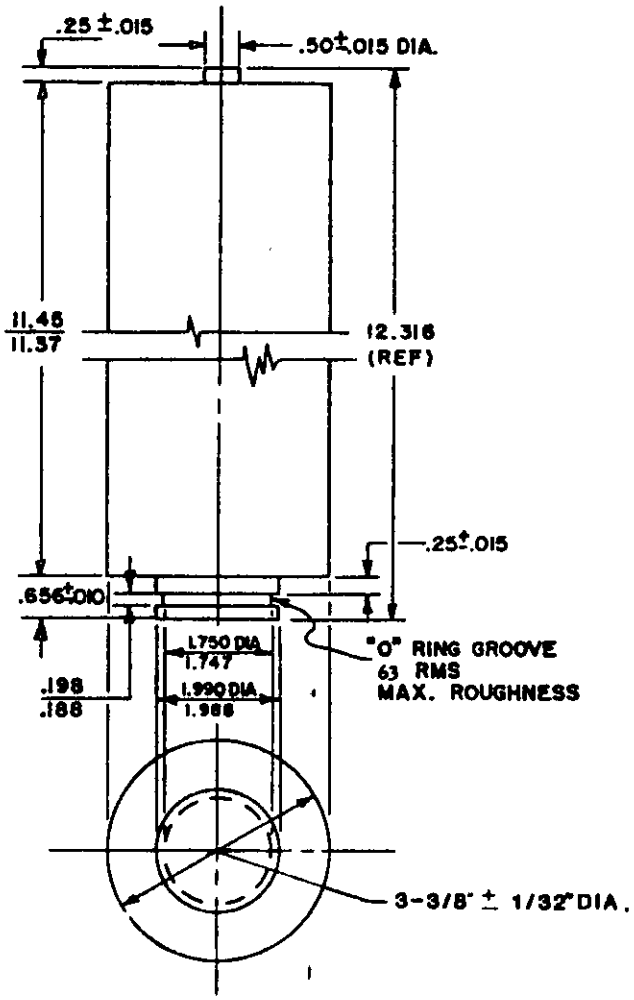

SH9856A

FIGURE 2. Filter elements dimensions, size B.

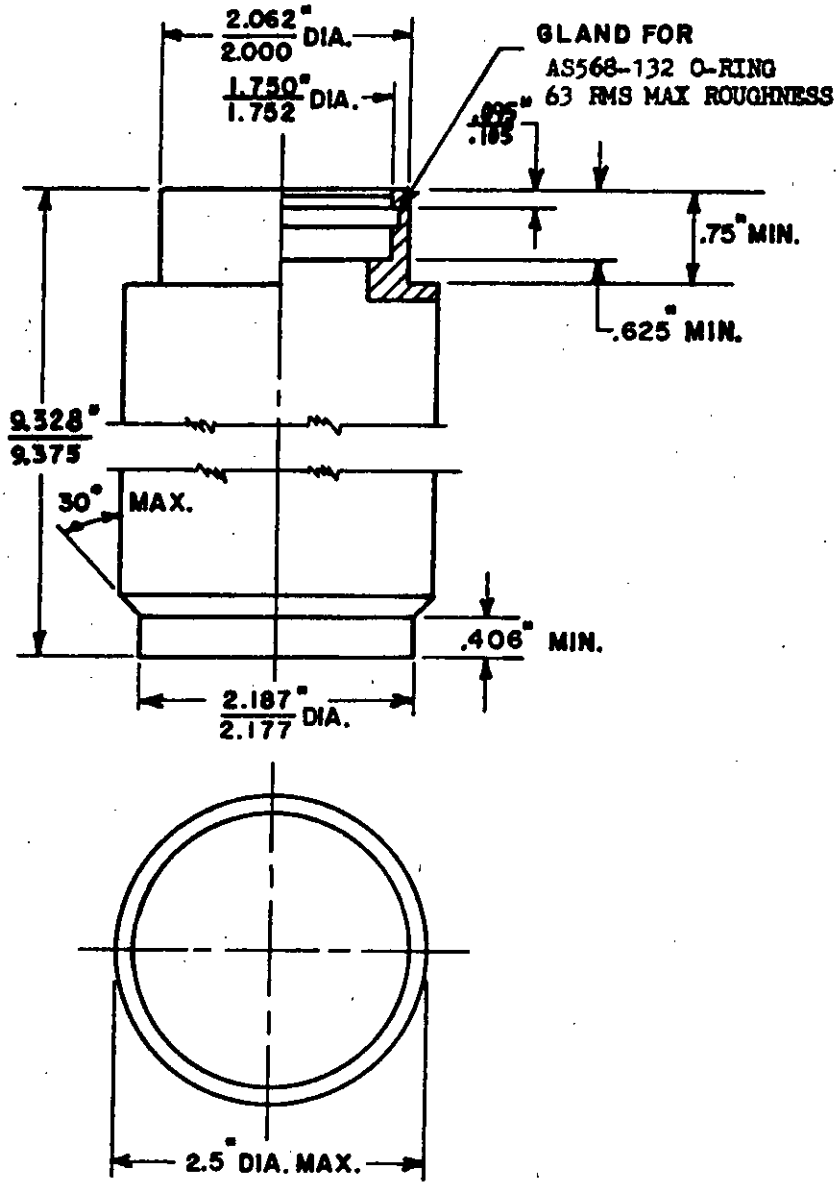

SH9857A

FIGURE 3. Filter elements dimensions, size C.

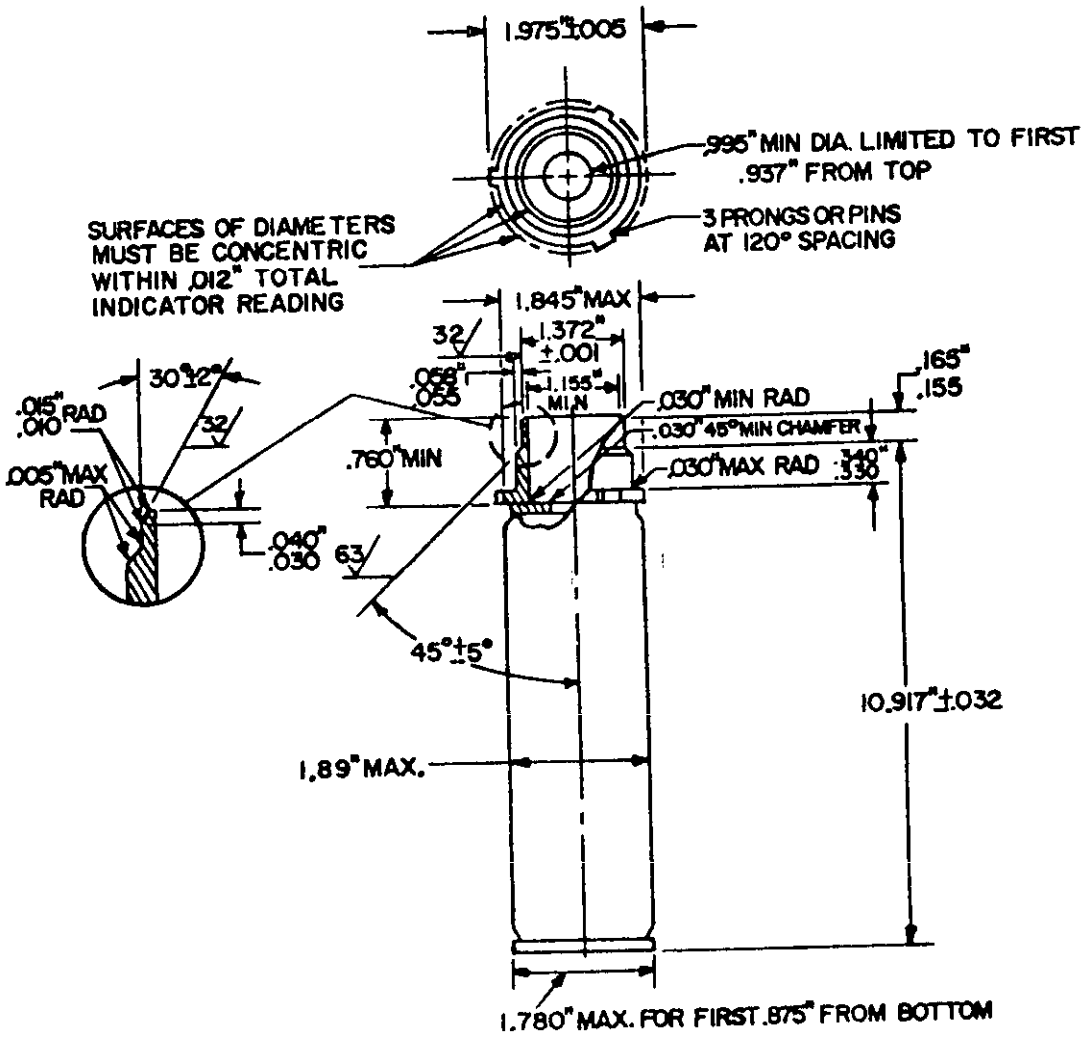

SH11278

FIGURE 4. Filter elements dimensions, size D.

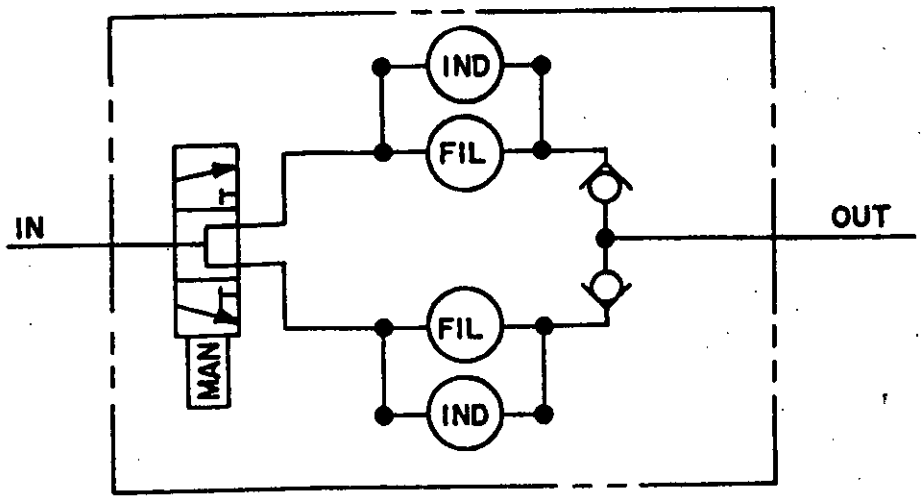

SH9850

FIGURE 5. Schematic of type 2N filter manifold assemblies.

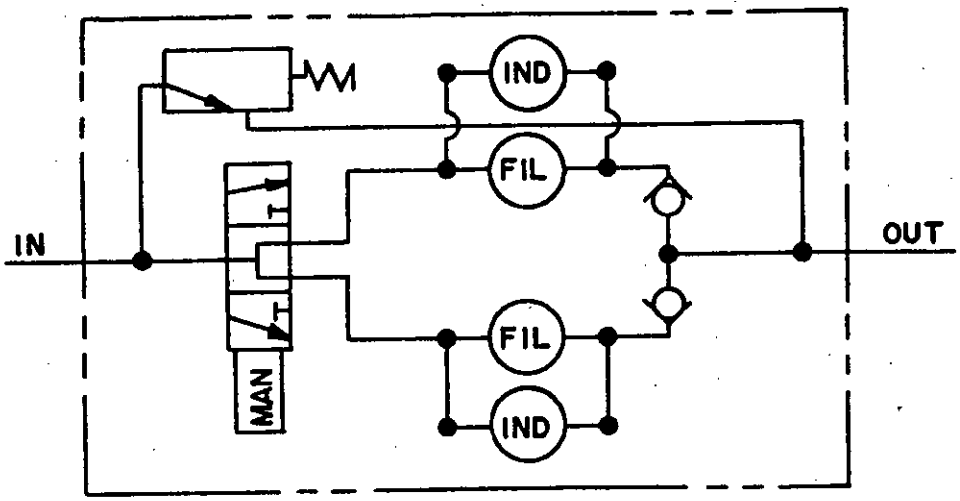

SH9851

FIGURE 6. Schematic of type 2R filter manifold assemblies.

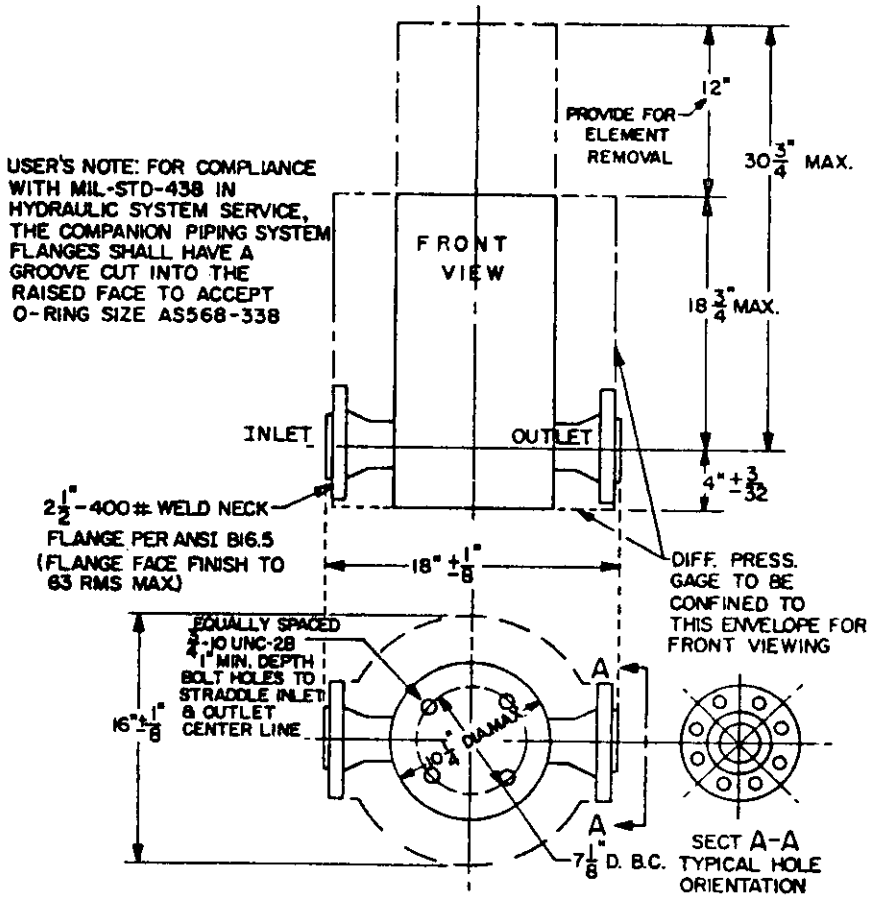

NOTE: View shown is left inlet, to order specify "LI" (see 6.2). To order opposite inlet/outlet porting configuration, specify "RI" (for right inlet) (see 6.2).

SH10522A

FIGURE 7. Type 3N and 3R, class BF filter assembly outline dimensions.

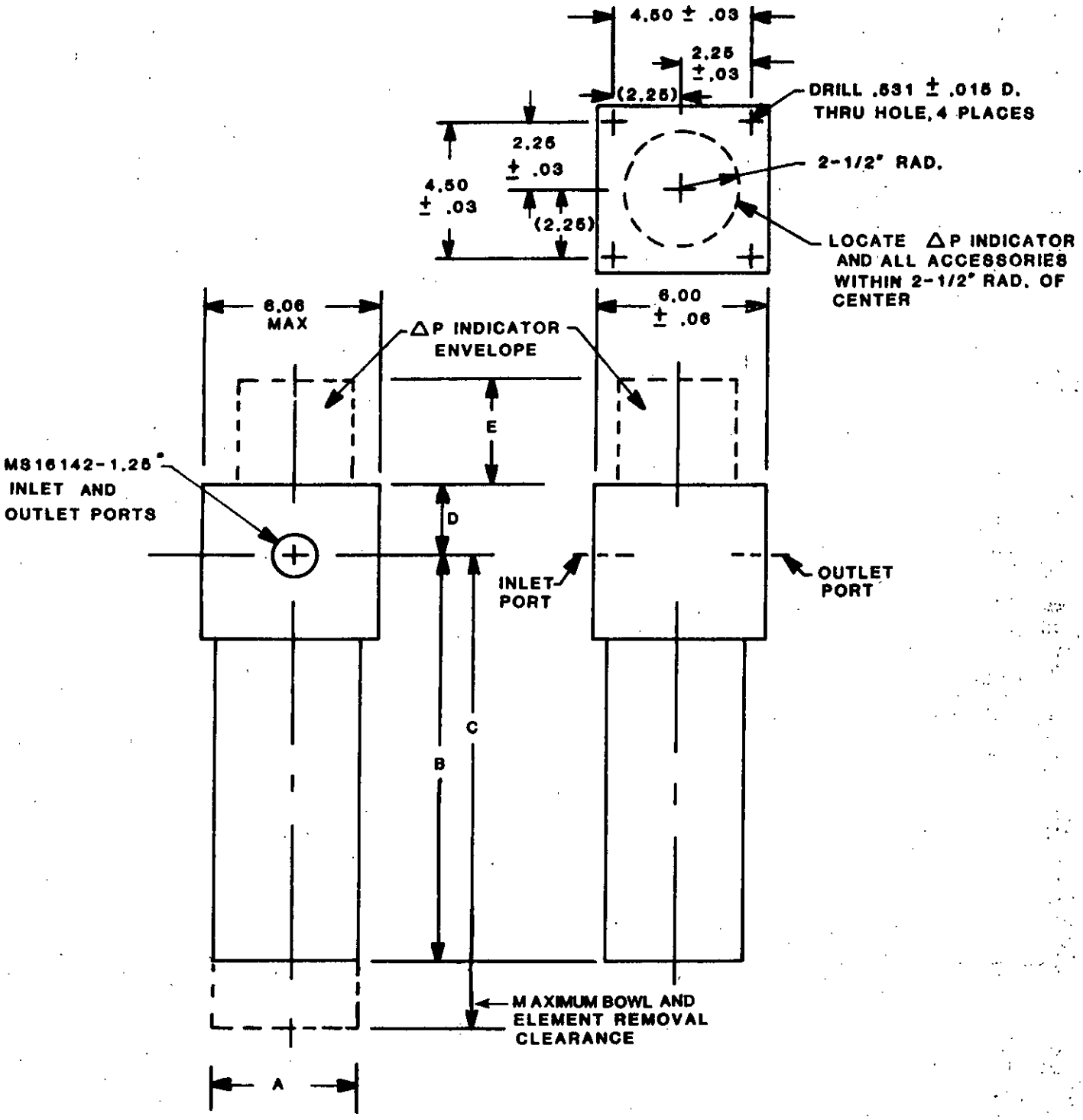

Class	A	B	C	D	E
AP	4.75 max	14.5 max	17.00 max	1.56 ± .03	3.75 max
BP	5.40 max	14.8 max	17.00 max	1.56 ± .03	3.75 max
CP	4.75 max	12.0 max	14.5 max	1.56 ± .03	3.75 max

SH12081

FIGURE 8. Type 1N and 1R class AP, BP, and CP filter assemblies outline dimensions.

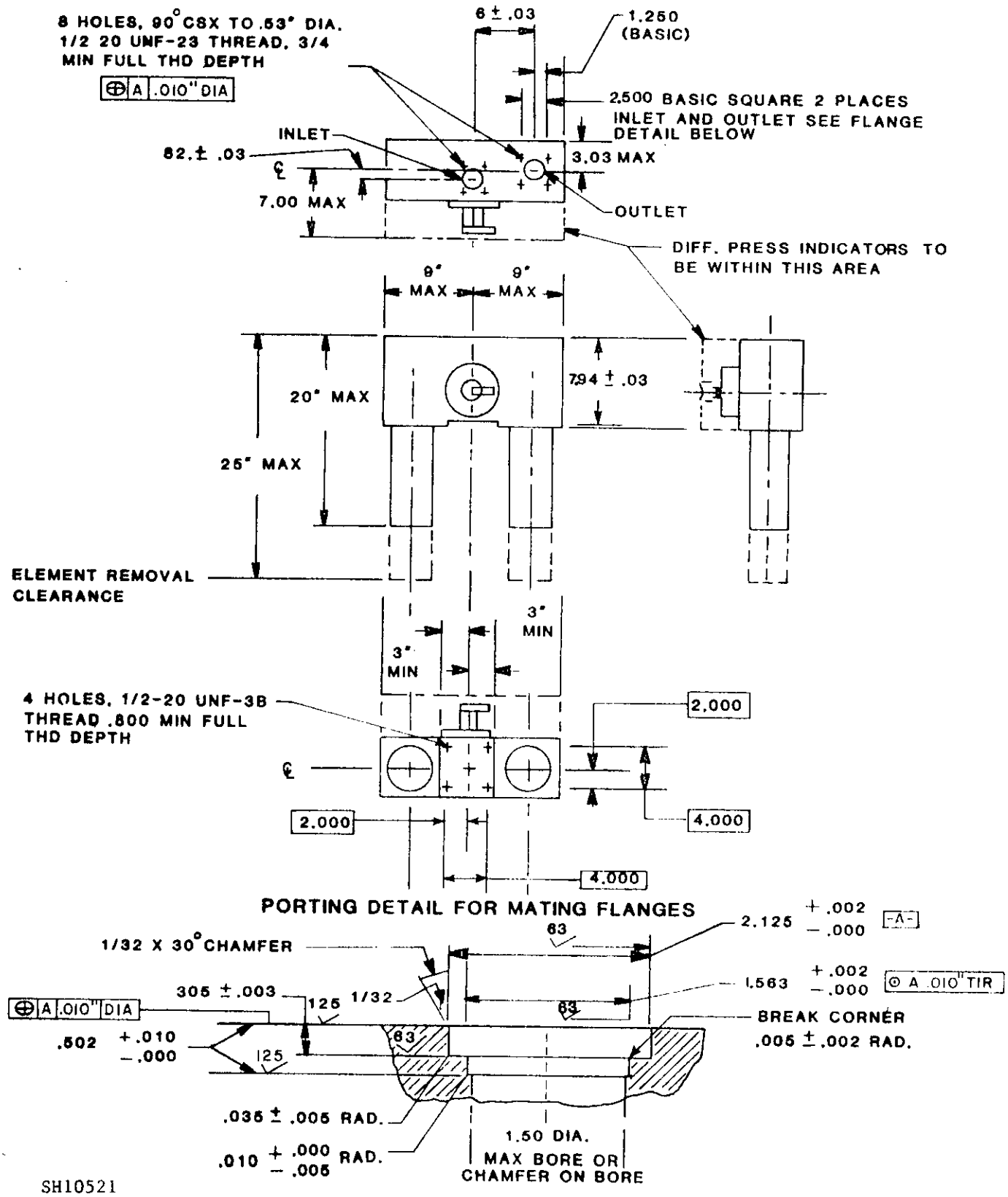

FIGURE 9. Type 2N and 2R, class BF filter manifold assembly outline dimensions.

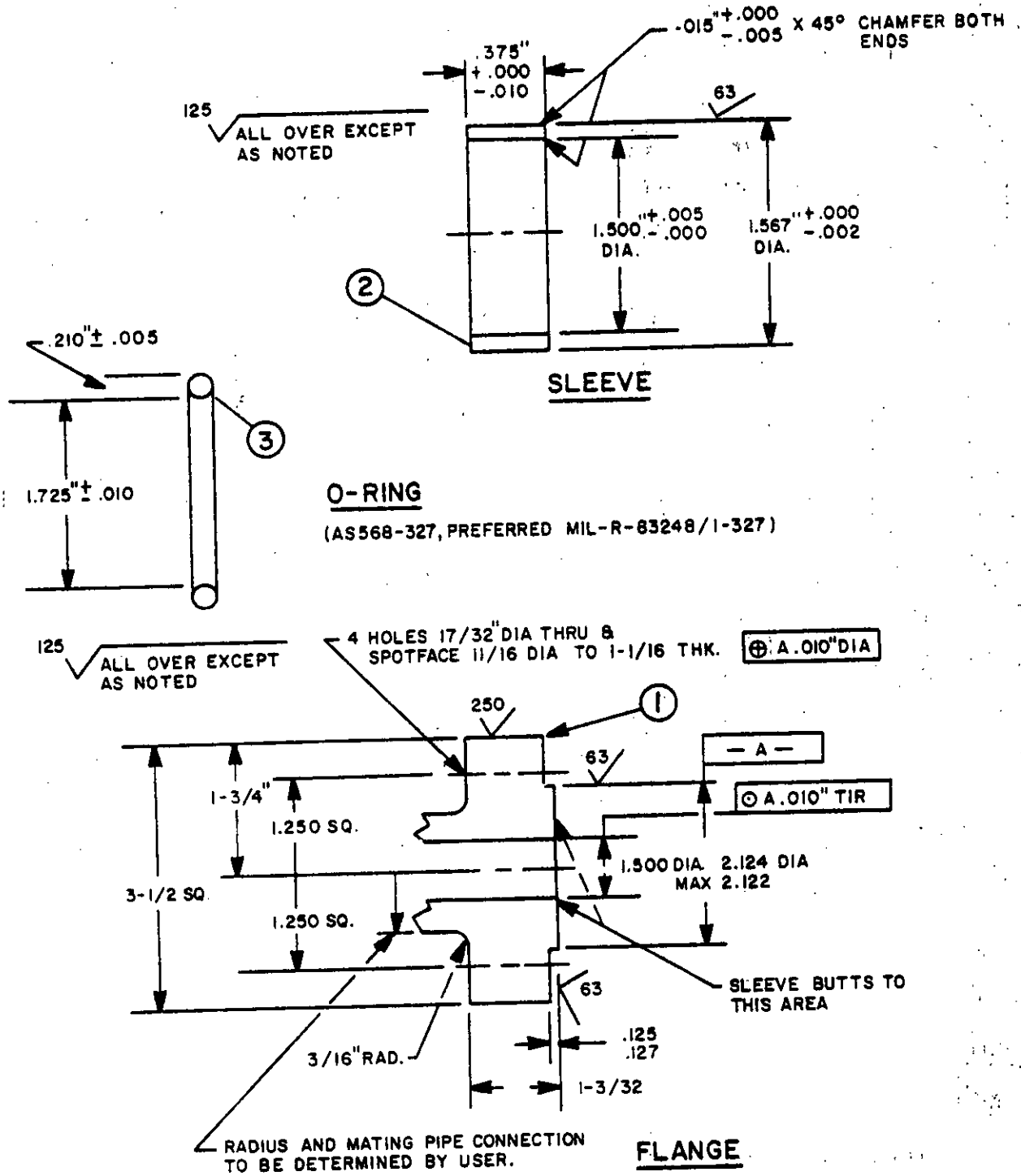

USER'S NOTES:

(1) PIECES 1, 2, AND 3 PROVIDED BY USER.
(2) FOR ASSEMBLY, PIECE 2 OUTSIDE DIAMETER PRESSES INTO MATING FLANGE DETAIL ON FILTER ASSEMBLY DIMENSION 1.563" + .002 -.000.
(3) O-RING FITS GROOVE CREATED BY SLEEVE O.D. AND MATING FLANGE DETAIL DIMENSIONS 2.125 + .002 -.000.

SH10521

FIGURE 9. Type 2N and 2R, class BF filter manifold assembly outline dimensions. - Continued

ASSEMBLY MUST MATE WITH FEMALE GLAND SHOWN ON FIGURE 11

DETAIL A

① M83248/1-015 & M828774-015

② M83248/1-014

ALL EDGES .010/.020 RADIUS

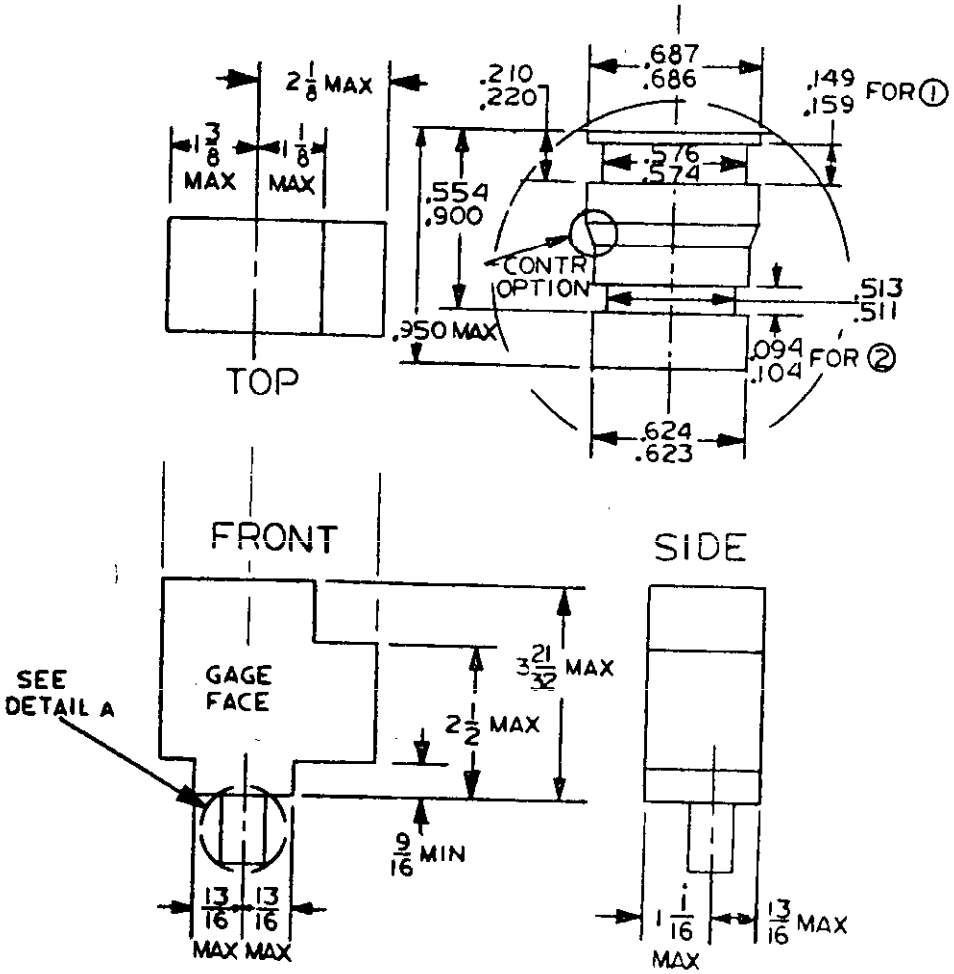

SH10157

FIGURE 10. Pressure indicator envelope and male gland dimensions.

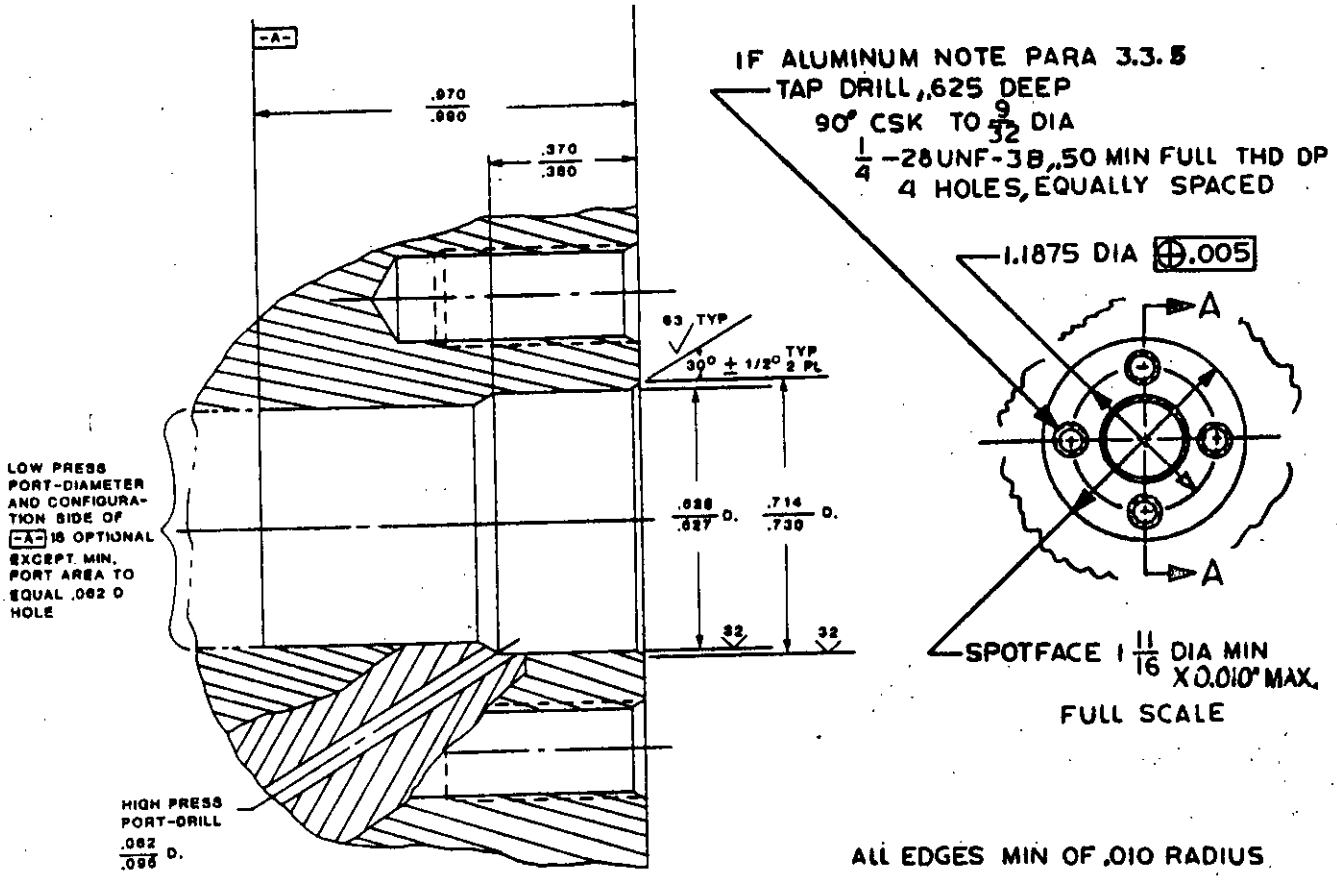

SECTION A-A

LIMITS OF PRESS PORT PENETRATION
FROM SPOTFACE SURFACE

	MIN	MAX
HIGH	.220	.440
LOW	.970	—

SH10156

FIGURE 11. Differential pressure indicator port.

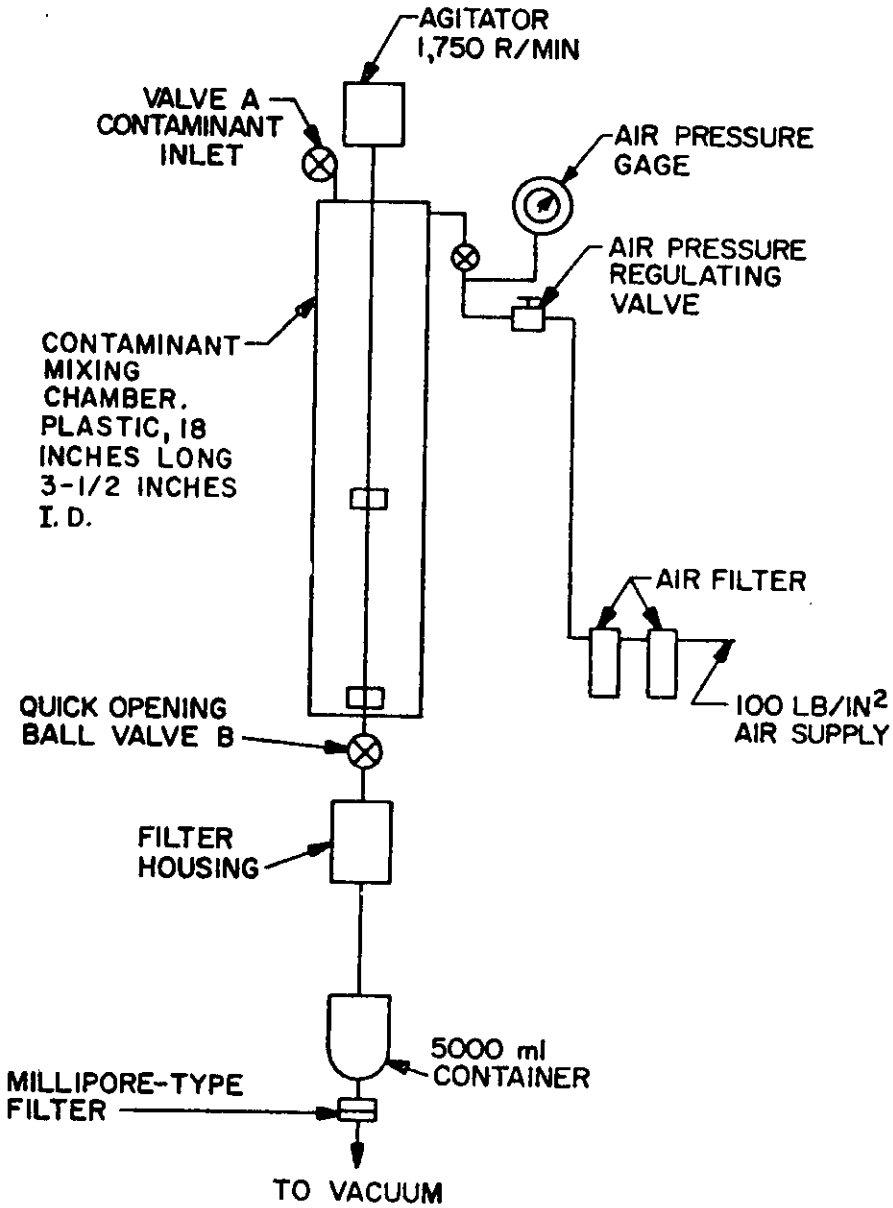

SH10897

FIGURE 12. Typical apparatus for determining filtration efficiency.

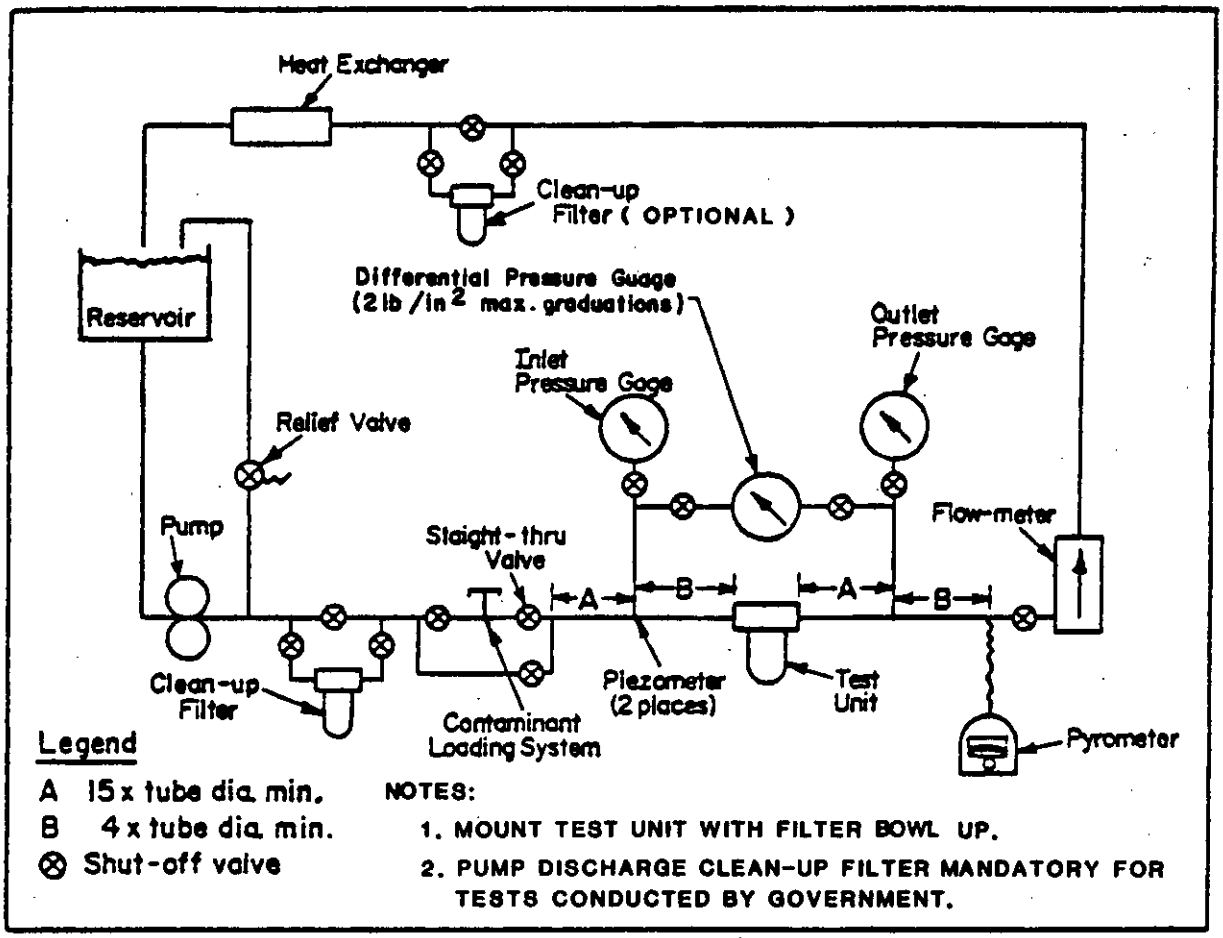

SH11279

FIGURE 13. Typical piping schematic for pressure build-up and collapse test.

INSTRUCTIONS: In a continuing effort to make our standardization documents better, the DoD provides this form for use in submitting comments and suggestions for improvements. All users of military standardization documents are invited to provide suggestions. This form may be detached, folded along the lines indicated, taped along the loose edge *(DO NOT STAPLE)*, and mailed. In block 5, be as specific as possible about particular problem areas such as wording which required interpretation, was too rigid, restrictive, loose, ambiguous, or was incompatible, and give proposed wording changes which would alleviate the problems. Enter in block 6 any remarks not related to a specific paragraph of the document. If block 7 is filled out, an acknowledgement will be mailed to you within 30 days to let you know that your comments were received and are being considered.

NOTE: This form may not be used to request copies of documents, nor to request waivers, deviations, or clarification of specification requirements on current contracts. Comments submitted on this form do not constitute or imply authorization to waive any portion of the referenced document(s) or to amend contractual requirements.

(Fold along this line)

(Fold along this line)

DEPARTMENT OF THE NAVY

NO POSTAGE NECESSARY IF MAILED IN THE UNITED STATES

OFFICIAL BUSINESS
PENALTY FOR PRIVATE USE $300

BUSINESS REPLY MAIL
FIRST CLASS PERMIT NO. 12503 WASHINGTON D. C.

POSTAGE WILL BE PAID BY THE DEPARTMENT OF THE NAVY

Commander
Naval Sea System Command (SEA 3112)
Department of the Navy
Washington, DC 20362

(TO DETACH THIS FORM, CUT ALONG THIS LINE.)

STANDARDIZATION DOCUMENT IMPROVEMENT PROPOSAL

(See Instructions – Reverse Side)

1. DOCUMENT NUMBER

2. DOCUMENT TITLE

3a. NAME OF SUBMITTING ORGANIZATION

4. TYPE OF ORGANIZATION *(Mark one)*

- ☐ VENDOR
- ☐ USER
- ☐ MANUFACTURER
- ☐ OTHER *(Specify)*: _____

b. ADDRESS *(Street, City, State, ZIP Code)*

5. PROBLEM AREAS

a. Paragraph Number and Wording:

b. Recommended Wording:

c. Reason/Rationale for Recommendation:

6. REMARKS

7a. NAME OF SUBMITTER *(Last, First, MI)* – Optional

b. WORK TELEPHONE NUMBER *(Include Area Code)* – Optional

c. MAILING ADDRESS *(Street, City, State, ZIP Code)* – Optional

8. DATE OF SUBMISSION *(YYMMDD)*

DD FORM 82 MAR 1426

PREVIOUS EDITION IS OBSOLETE.