Downloaded from http://www.everyspec.com

INCH-POUND
MIL-F-24385D
26 October 1989
SUPERSEDING
MIL-F-24385C
12 March 1981
(See 6.10)

MILITARY SPECIFICATION

FIRE EXTINGUISHING AGENT, AQUEOUS FILM-FORMING FOAM (AFFF) LIQUID CONCENTRATE, FOR FRESH AND SEAWATER

This specification is approved for use by all Departments and Agencies of the Department of Defense.

1. SCOPE

1.1 Scope. This specification covers the requirements for aqueous film-forming foam (AFFF) liquid concentrate fire extinguishing agents consisting of fluorocarbon surfactants and other compounds, as required to conform to this specification. At the time of use the concentrates shall be diluted with fresh or or ocean water to form a fire-extinguishing solution. Certain proportioning equipment may produce AFFF solutions of extreme concentrations; requirements of such concentrations are specified herein.

1.2 Classification. Concentrates shall be of the following types, as specified (see 6.2):

Type 3 - To be used as three parts concentrate to ninety-seven parts water by volume solution.
Type 6 - To be used as six parts concentrate to ninety-four parts water by volume solution.

Beneficial comments (recommendations, additions, deletions) and any pertinent data which may be of use in improving this document should be addressed to: Commander, Naval Sea Systems Command, SEA 55Z3, Department of the Navy, Washington, DC 20362-5101 by using the self-addressed Standardization Document Improvement Proposal (DD Form 1426) appearing at the end of this document or by letter.

AMSC N/A FSC 4210
DISTRIBUTION STATEMENT A Approved for public release; distribution is unlimited.

Downloaded from http://www.everyspec.com

2. APPLICABLE DOCUMENTS

2.1 Government documents.

2.1.1 Specifications, standards, and handbooks. The following specifications, standards, and handbooks form a part of this document to the extent specified herein. Unless otherwise specified, the issues of these documents are those listed in the issue of the Department of Defense Index of Specifications and Standards (DODISS) and supplement thereto, cited in the solicitation (see 6.2).

SPECIFICATIONS

FEDERAL

O-D-1407 - Dry Chemical, Fire Extinguishing, Potassium Bicarbonate.
NN-P-71 - Pallets, Material Handling, Wood, Stringer Construction, 2-Way and 4-Way (Partial).
RR-S-366 - Sieve Test.
TT-E-489 - Enamel, Alkyd, Gloss, Low VOC Content.
VV-G-1690 - Gasoline, Automotive, Leaded or Unleaded.
PPP-D-1860 - Drums, Plastic, Molded Polyethylene.

MILITARY

MIL-I-17214 - Indicator, Permeability; Low-Mu (Go-No-Go).
MIL-L-19140 - Lumber and Plywood, Fire Retardant Treated.
MIL-D-43703 - Drums, Shipping and Storage, Molded Polyethylene.

STANDARDS

FEDERAL

FED-STD-313 - Transportation Data and Disposal Data for Hazardous Materials Furnished to Government Activities.
FED-STD-595 - Colors.

MILITARY

MIL-STD-129 - Marking for Shipment and Storage.
MIL-STD-130 - Identification Marking of U.S. Military Property.
MIL-STD-147 - Palletized Unit Loads.

(Unless otherwise indicated, copies of federal and military specifications, standards, and handbooks are available from the Naval Publications and forms Center, (ATTN: NPODS), 5801 Tabor Avenue, Philadelphia, PA 19120-5099.)

2.1.2 Other Government documents, drawings, and publications. The following other Government documents, drawings, and publications form a part of this document to the extent specified herein. Unless otherwise specified, the issues are those cited in the solicitation.

Downloaded from http://www.everyspec.com

PUBLICATIONS

DEPARTMENT OF TRANSPORTATION (DOT)
Code of Federal Regulations (CFR), CFR 49,
Parts 100-199 - Hazardous Material Regulations.

(Copies are available from the Superintendent of Documents, U.S. Government Printing Office, Washington, DC 20402-0001.)

2.2 Non-Government publications. The following document(s) form a part of this document to the extent specified herein. Unless otherwise specified, the issues of the documents which are DOD adopted are those listed in the issue of the DODISS cited in the solicitation. Unless otherwise specified, the issues of documents not listed in the DODISS are the issues of the documents cited in the solicitation (see 6.2).

AMERICAN PUBLIC HEALTH ASSOCIATION
Standard Methods for the Examination of Water and Waste Water.

(Application for copies should be addressed to the American Public Health Association, 1015 15th Street, N.W., Suite 300, Washington, DC 20005.)

AMERICAN SOCIETY FOR TESTING AND MATERIALS (ASTM)

D 96 - Standard Test Methods for Water and Sediment in Crude Oils. (DoD adopted)
D 445 - Standard Test Method for Kinematic Viscosity of Transparent and Opaque Liquids (And the Calculation of Dynamic Viscosity). (DoD adopted)
D 1141 - Standard Specification for Substitute Ocean Water. (DoD adopted)
D 1218 - Standard Test Method for Refractive Index and Refractive Dispersion of Hydrocarbon Liquids.
D 1331 - Standard Test Methods for Surface and Interfacial Tension of Solutions of Surface-Active Agents.
D 1821 - Standard Test Method for Inorganic Chlorides in Askarels.
E 70 - Standard Test Method for pH of Aqueous Solutions with the Glass Electrode. (DoD adopted)
E 260 - Standard Practice for Packed Column Gas Chromatography.
E 527 - Standard Practice for Numbering Metals and Alloys (UNS).
E 729 - Standard Practice for Conducting Acute Toxicity Tests with Fish, Macroinvertebrates, and Amphibians.
G 1 - Standard Practice for Preparing, Cleaning, and Evaluating Corrosion Test Specimens.

(Application for copies should be addressed to the American Society for Testing and Materials, 1916 Race Street, Philadelphia, PA 19103.)

NATIONAL FIRE PROTECTION ASSOCIATION (NFPA)

412 - Evaluating Foam Fire Fighting Equipment on Aircraft Rescue and Fire Fighting Vehicles.

(Application for copies should be addressed to the National Fire Protection Association, Batterymarch Park, Quincy, MA 02269.)

Downloaded from http://www.everyspec.com

UNIFORM CLASSIFICATION COMMITTEE AGENT
Uniform Freight Classification Ratings, Rules and Regulations.

(Application for copies should be addressed to the Uniform Classification Committee Agent, Tariff Publication Officer, Room 1106, 222 South Riverside Plaza, Chicago, IL 60606.)

(Non-Government standards and other publications are normally available from the organizations that prepare or distribute the documents. These documents also may be available in or through libraries or other informational services.)

2.3 Order of precedence. In the event of a conflict between the text of this document and the references cited herein, the text of this document takes precedence. Nothing in this document, however, supersedes applicable laws and regulations unless a specific exemption has been obtained.

3. REQUIREMENTS

3.1 Qualification. Liquid concentrate fire extinguishing agents furnished under this specification shall be products which are authorized by the qualifying activity for listing on the applicable qualified products list at the time of award of contract (see 4.3 and 6.3).

3.2 Materials. Concentrates shall consist of fluorocarbon surfactants plus other compounds as required to conform to the requirements specified herein. The material shall have no adverse effect on the health of personnel when used for its intended purpose.

3.2.1 Material safety data sheet (MSDS). The contracting activity shall be provided a material safety data sheet at the time of contract award. The MSDS shall be provided in accordance with the requirements of FED-STD-313. The MSDS shall be included with each shipment of the material covered by this specification (see 5.5 and 6.4).

3.3 Concentrate characteristics. Concentrates shall conform to the chemical and physical requirements shown in table I.

TABLE I. Chemical and physical requirements for concentrates or solutions.

Requirement	Values		Applicable document
	Type 3	Type 6	
Refractive index, minimum	1.3630	1.3580	ASTM D 1218
Viscosity, centistokes			
maximum at 5°C	20	10	ASTM D 445
minimum at 25°C	2	2	ASTM D 445
Hydrogen ion concentration (pH)	7.0 to 8.5	7.0 to 8.5	ASTM E 70

Downloaded from http://www.everyspec.com

TABLE I. Chemical and physical requirements for concentrates or solutions - Continued.

Requirement	Values		Applicable document
	Type 3	Type 6	
Spreading Coefficient minimum	1.0	1.0	ASTM D 1331
Foamability:			
Foam expansion minimum	6.0	6.0	NFPA 412 (method A)
Foam 25 percent drainage time, minutes, minimum	4.0	4.0	NFPA 412 (method A)
Corrosion rate:			
General: metal coupons			
Cold rolled, low carbon steel (UNS G10100), mils/year maximum	2.5	2.5	ASTM E 527 ASTM G 1
Copper-nickel (90-10) (UNS C70600), mils/year maximum	1.0	1.0	ASTM E 527 ASTM G 1
Monel (UNS N04400), mils/year maximum	1.0	1.0	ASTM E 527 ASTM G 1
Bronze (UNS C90500), mils/year maximum	1.0	1.0	ASTM E 527 ASTM G 1
General: metal ions dissolved in AFFF			
Cold rolled, low carbon steel (UNS G10100), ppm maximum, Fe	35.0	35.0	ASTM E 527 ASTM G 1
Copper-nickel (90-10) (UNS C70600), ppm			
maximum, Cu	5.0	5.0	ASTM E 527
maximum, Ni	2.0	2.0	ASTM G 1
Monel (UNS N04400), ppm			
maximum, Ni	5.0	5.0	ASTM E 527
maximum, Cu	2.0	2.0	ASTM G 1
Bronze (UNS C90500), ppm			
maximum, Cu	7.0	7.0	ASTM E 527
maximum, Zn	2.0	2.0	ASTM G 1
Localized, corrosion-resistant (CRES) steel (UNS S30400)	No pits	No pits	ASTM G 1

Downloaded from http://www.everyspec.com

TABLE I. Chemical and physical requirements for concentrates or solutions - Continued.

Requirement	Values		Applicable document
	Type 3	Type 6	
Total halides, ppm maximum	500	250	ASTM D 1821
Dry chemical compatibility, burnback resistance time, seconds minimum	480	480	-----
Environmental impact:			
Toxicity, median lethal concentration (LC_{50}), mg/L minimum	500	1000	ASTM E 729
COD, mg/L maximum	1000K	500K	ASTM E 729
BOD_{20} / COD minimum	0.65	0.65	ASTM E 729

3.3.1 Film formation and sealability. A film produced by a 3 percent AFFF solution of type 3 or a 6 percent AFFF solution of type 6 shall spread over the fuel surface and seal off vapor production to prevent sustained ignition (see 4.7.7).

3.3.2 Stability. Both the concentrate (type 3 or type 6) and a 3 percent AFFF solution of type 3 or a 6 percent AFFF solution of type 6 as applicable shall conform to the following requirements after being stored for 10 days at 60 ± 2.0 degrees Celsius (°C) (see 4.7.11):

(a) Spreading coefficient: (see table I).
(b) Foamability: (see table I).
(d) Film formation and sealability: As specified in 3.3.1.
(e) Fire performance, 28 square-foot fire, using solutions of aged concentrates 1.5, 3 and 6 percent of type 3 and 3, 6 and 12 percent of type 6 in ocean water as specified in 3.4: (see tables II and IIIA).
(f) Stratification: No visible evidence following test (see 4.7.16).
(g) Precipitation: 0.05 percent by volume (see 4.7.17).

3.3.3 Inter-agent compatibility. The concentrate of one manufacturer shall be compatible in all proportions with concentrates of the same type furnished by other manufactures listed on the qualified products list. The material shall also be compatible with materials in inventory which were acquired under previous

Downloaded from http://www.everyspec.com

issues of this specification and are known to still be in use in significant quantities. Information regarding these materials may be obtained from the Naval Sea Systems Command (NAVSEA) at the address listed in 6.3. The concentrate, when mixed in the proportions determined by NAVSEA, shall conform to the following requirements after 10 days storage at 65 ± 2.0°C (see 4.7.11):

(a) Foamability: (see table I).
(b) Film formation and sealability: As specified in 3.3.1.
(c) Fire performance 28 square-foot: 3 percent of type 3 and 6 percent of type 6 ocean water solutions as specified in 3.4 (see tables II and IIIA).
(d) Stratification: No visible evidence following test (see 4.7.16).
(e) Precipitation: 0.05 percent by volume (see 4.7.17).

3.3.4 Total fluorine content. The total fluorine content of the AFFF shall not deviate more than 15 percent of the value determined and recorded at time of qualification (see 4.7.18).

3.4 Fire performance. The foam shall meet the fire performance requirements shown in tables II, IIIA and IIIB. No foam shall fail more than 10 percent of the total number of tests performed, nor shall there be more than 1 failure permitted in any one category.

3.4.1 Multiple inter-agent compatibility testing. If a concentrate is to be run with more than one qualified agent for compatibility testing, then one additional failure in this category for each additional qualified agent will be permitted. However, the total number of failures still may not exceed 10 percent of the total number of tests run.

3.5 Marking. Identification marking shall be in accordance with MIL-STD-130. In addition, the marking on the containers (see 5.4) shall be in white characters against a green background for type 3, a blue background for the type 6 (see 5.2.1.3).

TABLE II. Fire performance.

Fire tests	Number of tests to be performed	Test procedure
28 sq. ft. fire tests		
1) Full strength solution		
a) Ocean water solution	6	4.7.14.5
b) Fresh water solution	4	4.7.14.5
2) PKP compatibility, full strength solution	4	4.7.10
3) Half strength solution	4	4.7.14.5
4) Double strength solution	4	4.7.14.5
5) Inter-agent compatibility, full strength solution	6	4.7.12

Downloaded from http://www.everyspec.com

TABLE II. Fire performance - Continued.

Fire tests	Number of tests to be performed	Test procedure
28 sq. ft. fire tests		
6) Quintupled strength solution	2	4.7.14.6
7) Aged concentrate		
a) Half strength solution	4	4.7.11
b) Full strength solution	4	4.7.11
c) Double strength solution	4	4.7.11
50 sq. ft. fire tests		
8) Full strength solution	2	4.7.15

TABLE IIIA. Application, extinguishment and burnback times for 28 square-foot fire tests.

Test	Total application time (seconds)	Maximum extinguishment time (seconds)	Minimum 15 percent burnback time (seconds)
1	60	55	840
2	60	55	540
3	75	70	720
4	60	60	720
5	60	55	840
6	90	55	720
7a	75	70	720
7b	60	55	840
7c	60	60	720

TABLE IIIB. Application, extinguishment and burnback time for 50 square-foot fire test.

Test	Total application time (seconds)	Maximum extinguishment time (seconds)	Minimum 25 percent burnback time (seconds)	Minimum 40 second summation
8	90	50	840	320

3.5.1 Additional marking. Two identical markings, as shown on figures 1 and 2, shall be applied to containers so that the markings are located diametrically opposite. The markings shall be applied on the containers in such a manner that water immersion contact with the contents of the containers, or normal handling shall not impair the legibility of the marking. Paper labels shall not be used.

Downloaded from http://www.everyspec.com

4. QUALITY ASSURANCE PROVISIONS

4.1 Responsibility for inspection. Unless otherwise specified in the contract or purchase order, the contractor is responsible for the performance of all inspection requirements (examinations and tests) as specified herein. Except as otherwise specified in the contract or purchase order, the contractor may use his own or any other facilities suitable for the performance of the inspection requirements specified herein, unless disapproved by the Government. The Government reserves the right to perform any of the inspections set forth in the specification where such inspections are deemed necessary to ensure supplies and services conform to prescribed requirements.

4.1.1 Responsibility for compliance. All items shall meet all requirements of sections 3 and 5. The inspection set forth in this specification shall become a part of the contractor's overall inspection system or quality program. The absence of any inspection requirements in the specification shall not relieve the contractor of the responsibility of ensuring that all products or supplies submitted to the Government for acceptance comply with all requirements of the contract. Sampling inspection, as part of the manufacturing operations, is an acceptable practice to ascertain conformance to requirements, however, this does not authorize submission of known defective material, either indicated or actual, nor does it commit the Government to accept defective material.

4.2 Classification of inspections. The inspection requirements specified herein are classified as follows:

(a) Qualification inspection (see 4.3).
(b) Quality conformance inspection (see 4.4).

4.3 Qualification inspection. Qualification inspection shall be conducted at a laboratory satisfactory to the Naval Sea Systems Command. Qualification inspection shall consist of the tests shown in table IV. A permanent visual record of all fire performance tests by video, as well as recorded heat flux data shall be retained for review by the qualifying laboratory for 2 years.

4.3.1 Samples for qualification inspection. One hundred gallons of type 3 and 200 gallons of type 6 are required for the qualification inspection.

4.4 Quality conformance inspection. The samples selected in accordance with 4.4.1 and 4.4.2 shall be subjected to the quality conformance inspection specified in table IV. For the 28 square-foot fire test, 3 tests shall be performed as described in 4.7.14.5 using a full strength AFFF solution made from ocean water. All three of these tests shall be passed using the criteria set forth in table IIIA. If the sample tested fails any of the quality conformance tests outlined in table IV, then the lot represented by the sample shall be rejected.

Downloaded from http://www.everyspec.com

TABLE IV. Qualification and quality conformance inspections.

Examination or test	Requirement	Test	Qualification	Quality conformance
Refractive index	3.3	4.7.2	X	X
Viscosity	3.3	4.7.3	X	X
pH value	3.3	4.7.4	X	X
Spreading coefficient	3.3	4.7.5	X	X
Foamability	3.3	4.7.6	X	X
Film formation and sealability	3.3.1	4.7.7	X	X
General corrosion	3.3	4.7.8.1	X	
Localized corrosion	3.3	4.7.8.2	X	
Total halides	3.3	4.7.9	X	X
Fluorine content	3.3.4	4.7.18	X	X
Dry chemical compatibility	3.3	4.7.10	X	
Stability	3.3.2	4.7.11	X	
Inter-agent compatibility	3.3.3	4.7.12	X	
Environmental impact	3.3	4.7.13	X	
28 square-foot fire test	3.4	4.7.14	X	X
50 square-foot fire test	3.4	4.7.15	X	
Examination of filled containers		4.5		X
Torque to remove cap	5.2.1.1(j)	4.7.19.2	X	X

4.4.1 Inspection lot. A lot shall consist of all foam concentrate manufactured as one batch and transferred from one mixing tank to the shipping container.

4.4.2 Sampling for quality conformance inspection. Three filled 5 gallon containers shall be selected at random from each lot and used as one composite sample for the tests specified in 4.5, or three 5 gallon containers of the product shall be withdrawn from an agitated mixing tank prior to packaging.

4.5 Examination of filled containers. Each sample-filled container shall be examined for defects of construction (see 5.2.1.1), for evidence of leakage, and for unsatisfactory markings (see 5.4). Each filled container shall also be weighed to verify the amount of contents. Any container in the sample having one or more defects or less than required fill shall not be offered for delivery, and if the number of defective containers in any sample exceeds the acceptance number in the sampling plan of table V, this shall be cause for rejection of the lot represented by the sample.

4.5.1 Sampling for examination of filled containers and palletization. A random sample of filled containers shall be selected from each lot in accordance with table V. The sampling requirements of table V shall be used to verify conformance to all requirements regarding fill, closure and other requirements not requiring test (see 4.4.1, 5.2.1.1, 5.2.1.2, and 5.3.2).

Downloaded from http://www.everyspec.com

TABLE V. Examination of filled containers.

Lot size	Sample size	Accept	Reject 1/ 2/ 3/
2 - 90	3	0	1
91 - 150	5	0	1
151 - 280	8	1	2
281 - 500	13	2	3
501 - 1200	32	3	4
1201 - 3200	50	5	6
3201 - 10000	80	10	11
10001 - 35000	125	14	15
35001 and over	200	21	22

1/ All defective items must be replaced with acceptable items prior to lot acceptance.
2/ Inspect sample size until reject criteria is reached.
3/ Rejected lots may be screened and resubmitted for inspection and retest.

4.6 Quality conformance inspection. (See 6.3.)

4.7 Test procedure. Test procedures shall be as specified in 4.7.2 through 4.7.19.2.

4.7.1 Test materials. Except as listed below, all materials used for testing of physical and fire characteristics shall be as specified in the referenced document or standard (see table I).

4.7.1.1 Ocean water. When ocean water is required for tests, synthetic ocean water in accordance with ASTM D 1141 shall be used.

4.7.1.2 Heptane for fire performance tests. When heptane is required for fire performance tests (see 4.7.14 and 4.7.15), the fuel shall be not less than 95 weight percent n-heptane as determined by gas chromatograph in accordance with ASTM E 260.

4.7.1.3 Heptane for physical characteristics. When heptane is required for the laboratory determination of physical characteristics (see 4.7.5 and 4.7.7), the fuel shall be not less than 99 weight percent n-heptane as determined by gas chromatograph in accordance with ASTM E 260.

4.7.2 Refractive index. The refractive index shall be determined at 25 ± 0.1°C in accordance with ASTM D 1218.

4.7.3 Viscosity. The viscosity shall be determined at temperatures of 5 ± 0.1°C and 25 ± 0.1°C in accordance with ASTM D 445, using capillary viscosimeters of the appropriate size.

4.7.4 pH value. The pH value shall be determined potentiometrically, using a pH meter with a glass electrode and a reference electrode, at 23 ± 2.0°C in accordance with ASTM E 70.

Downloaded from http://www.everyspec.com

4.7.5 Spreading coefficient. The spreading coefficient shall be determined with reference to n-heptane in accordance with the following relationship:

$$S_{a/b} = \gamma_b - \gamma_a - \gamma_i$$

where: $S_{a/b}$ = spreading coefficient, (dynes per cm)
γ_b = surface tension of n-heptane as determined in 4.7.5.1.
γ_a = surface tension of AFFF solution as determined in 4.7.5.1.
γ_i = interfacial tension between liquids as determined in 4.7.5.2.

4.7.5.1 Surface tension. The surface tension of an AFFF solution of 3 ± 0.05 percent of type 3 or 6 ± 0.1 percent of type 6 by volume in distilled water, as appropriate, and of pure grade n-heptane (99.0 percent minimum purity) shall be determined with a Du Nouy tensiometer, or equal, at 23 ± 2.0°C in accordance with ASTM D 1331.

4.7.5.2 Interfacial tension. The interfacial tension between an AFFF solution of 3 ± 0.05 percent of type 3 or 6 ± 0.1 percent of type 6 by volume in distilled water, as appropriate, and pure grade n-heptane (99.0 percent minimum purity) shall be determined with a Du Nouy tensiometer, or equal, at 23 ± 2.0°C until the readings come to equilibrium in accordance with ASTM D 1331.

4.7.6 Foamability. The foam shall be generated by means of a special 2 gallon per minute (gal/min) test nozzle as described in 4.7.6.1. The foam solution shall be premixed at a temperature of 23 ± 2.0°C. The nozzle shall be mounted on a support stand similar to that shown on figure 3. The nozzle assembly and stand shall be positioned so that the wing tip spreader is located 36 ± 0.5 inches above the floor and 24 ± 0.5 inches away from the near edge of the foam collection backboard. The nozzle assembly shall be mounted in the stand so that the foam barrel is parallel to the floor. The test procedure shall be in accordance with NFPA 412, test method A, except as noted above. Foamability shall be run on AFFF solution of 3 ± 0.05 percent of type 3 and 6 ± 0.1 percent of type 6 by volume in ocean water.

4.7.6.1 Two gallon per minute nozzle. The basic nozzle as made by National Foam System, Inc., or equal, shall be modified by shortening the length of the foam barrel from 2-1/2 to 1-1/4 inches, and by adding a wing-tip spreader on the outlet, as shown on figure 4. The spreader shall have a 1/8-inch wide by 1-7/8-inch long oval orifice (it may be made by slightly compressing a Bernz-o-matic TX-1527, or equal, flame spreader). A detailed drawing of the nozzle construction is available from the Naval Research Laboratory, Code 6180, Washington, DC 20375-5000. During foam sample collection, the nozzle inlet pressure shall be maintained at a gauge pressure of 100 pounds per square inch (lb/in^2).

4.7.7 Film formation and sealability. The film formation and sealability shall be determined in accordance with the test procedure specified in 4.7.7.1. Tests shall be conducted at temperatures of 23 ± 2.0°C.

Downloaded from http://www.everyspec.com

4.7.7.1 Test procedure. Forty milliliters (mL) of n-heptane (minimum 99.0 percent purity) shall be placed in a borosilicate glass petri dish (diameter 100 millimeters (mm) by height 20 mm). In the approximate center of the dish a 3/4 inch, no. 8 flat-head wood screw shall be placed on its head. The screw shall be made of stainless steel, chrome plated brass, or brass. Using a microsyringe, 0.25 mL (250 microliters) of test solution 3 ± 0.05 percent of type 3 or 6 ± 0.1 percent of type 6 by volume in ocean water shall be carefully applied to the tip of the screw from a height of about 1/4 inch above the screw. The microsyringe shall have a needle gauge of 22 (outside diameter, 0.028 inch, inside diameter, 0.016 inch). The fully formed droplets shall be applied at a rate of approximately one per second. Bubbles should be avoided as their presence can alter the spreading. Reflected light can be used as an aid in observing the spreading of the aqueous solution film over the surface of the n-heptane. Two minutes after applying the first drop of AFFF solution to the screw, a pilot flame shall be passed over the fuel surface at a height of about 1/2 inch. A small flash is permitted, but no sustained ignition shall result. A 1 inch long pilot flame shall be provided with a hand-held propane cylinder fitted with a capillary tubing outlet.

4.7.8 Corrosion. The following shall be used to assess the potential corrosivity of the AFFF solution:

(a) General corrosion rate.
(b) Dissolved metal ions.
(c) Localized corrosion.

4.7.8.1 General corrosion. General corrosion shall be tested as specified in 4.7.8.1.1 through 4.7.8.1.7.

4.7.8.1.1 Test medium. The test medium for immersion of the metal specimens for general corrosion shall consist of the concentrate diluted 10 percent by volume with ocean water in accordance with ASTM D 1141 except for steel metal specimens (1010 cold rolled, UNS G10100) which shall be immersed in AFFF concentrate only.

4.7.8.1.2 Test specimens. The test specimens shall consist of the following metals, in accordance with UNS designations (as specified in ASTM E 527):

(a) Steel, 1010 cold rolled, UNS G10100
(b) Monel, 400, Ni/Cu (70/30), UNS N04400
(c) Bronze, 905, UNS C90500
(d) Cu/Ni, (90/10), 760, UNS C70600

Metal coupon specimens except for bronze shall be milled to finished nominal dimensions of 1/16 inch thick, 1/2 inch wide, and 3 inches long. Bronze coupons shall have finished dimensions of approximately 3/8 inch thick, 1/2 inch wide, and 3 inches long. All metal specimens will have a 1/16 inch diameter hole, centered, 3/16 inch from top of metal coupon (see 6.6).

Downloaded from http://www.everyspec.com

4.7.8.1.3 Preparing and cleaning test specimens. Cleaning and preparing of test specimens shall be in accordance with ASTM G 1. Metal coupons shall be chemically or electrolytically cleaned before and after corrosion testing. Handling of all metal specimens shall be done with either plastic or teflon covered tweezers. Cleaning time for Cu/Ni alloys and for iron/steel shall be consistent throughout the entire test procedure. Metal coupons shall be rinsed thoroughly with distilled water and dried in an oven for 15 minutes. Specimens shall be cooled to room temperature (20 to 25°C) before weighing. The coupons shall be weighed to the nearest 0.01 milligram (mg). The weight of each coupon shall be recorded. The balance shall be recalibrated every 10 weighings to maintain a high degree of accuracy. Removal of solid metal during the cleaning of metal coupons can result in an error in the determination of the corrosion rate. This can be checked by recleaning the weighed specimens by the same method and reweighing them.

4.7.8.1.4 Preparing and cleaning of glassware. Glassware and sample vials shall be made of borosilicate glass to prevent adsorption of metal ions onto glass surface. Glassware shall be rinsed in 1:1 nitric acid (HNO_3) for 15 minutes, then rinsed with distilled water and oven dried.

4.7.8.1.5 Test procedure. Three weighed coupons of each metal type shall be fully immersed in the test medium in separate 600 mL beakers. Metal coupons shall be suspended in the test medium so that the coupons do not touch the bottom of the beaker or each other. Suspending the metal coupons may be accomplished by using small wooden rods laid across the top of the beaker with polyester string looped through hole in metal coupon. Five-hundred and fifty mL of test medium shall be used in each 600 mL beaker. The coupons and test medium shall be held at 35 $\pm$ 2.0°C for 28 days. An inverted petri dish (150 by 20 mm) or a watch-glass cover used in conjunction with a plastic film shall be used to retard evaporation. The test medium shall be stirred at least every third day for 10 minutes. At the end of the exposure period, the metal coupons shall be removed and examined for any corrosion effects. The metal coupons after visual inspection shall then be immersed in their appropriate cleaning solution, rinsed thoroughly with distilled water and oven dried for 15 minutes. The coupons shall be weighted to the nearest 0.01 mg. The total medium volume shall be recorded after the coupons have been removed. The test medium shall be stirred and filtered through a Whatman grade 6 filter paper or equivalent. Two 15 mL samples shall be taken for analysis from each test medium. One of the 15 mL samples collected from the test medium shall be diluted with 1:1 nitric acid (HNO_3) to dissolve any metal salts that may have formed. The other 15 mL sample may be used as a backup to the first, if needed.

4.7.8.1.6 Analyzing for metal content. Analyzing corrosion test sample solutions shall be done by any of the following methods:

(a) DCP atomic emission spectrometry.
(b) Atomic absorption spectrometry.

The metal coupon solutions shall be analyzed for the following elements with results being reported for the total amount of metal in the original solution (i.e. corrected for dilutions):

Downloaded from http://www.everyspec.com

	Elements
(a) Steel, 1010, cold rolled UNS G10100, maximum	Fe
(b) Monel, 400, Ni/Cu UNS N04400, maximum	Ni, Cu
(c) Bronze, 905 UNS C90500, maximum	Cu, Zn
(d) Cu/Ni Alloy 760 UNS C70600, maximum	Cu, Ni

4.7.8.1.7 Calculating corrosion rate of test metal coupons. The corrosion rate shall be calculated by the following formula and shall be reported in mils per year (mils/year):

$$\text{Corrosion rate} = (K \times W_{TL})/(A \times T \times D)$$

Where:

K = a constant of 534.
T = time of exposure in hours to the nearest 0.5 hour.
A = total exposed metal surface area in square inches to the nearest 0.001 square inch.
D = density of metal specimen in grams per cubic-centimeter (g/cm^3).
W_{TL} = $W_1 - W_2$ = the total mass lost of metal coupon to the nearest 0.01 mg after a 28-day exposure to test medium.
W_1 = weight of metal coupon after cleaning.
W_2 = weight of metal coupon after exposure to test medium and cleaning.

4.7.8.2 Localized corrosion. Localized corrosion shall be tested as specified in 4.7.8.2.1 through 4.7.8.2.4.

4.7.8.2.1 Test specimens. The test specimens shall consist of UNS S30400 CRES milled to finished dimensions of approximately 1/16 inch thick, 1/2 inch wide, and 3 inches long, without holes. After degreasing with acetone, rinsing with distilled water, and air drying before exposure, the specimens shall be pretreated by immersion in a 1:9 concentrated nitric acid-water solution for 5 minutes.

4.7.8.2.2 Test medium. The test medium for immersion of the metal specimens for localized corrosion shall consist of the concentrate diluted 10 percent by volume with ocean water in accordance with ASTM D 1141.

4.7.8.2.3 Procedure. Five specimens shall be girdled lengthwise with a clean 1/16 to 1/8 inch wide band of gum rubber of a size such that the band is taut during the test. Because of the poor quality of most commercial rubber bands, it is recommended that the bands for this test be cut from 1-3/4 inch flat width pure gum amber tubing, Gooch type (Preiser Scientific Rubber tubing, 1/32 inch thin wall, Stock No. 139080, or equal). This tubing is most easily cut into uniform strips with a blade-type paper cutter, but may also be cut with sharp shears. The specimens girdled with the rubber bands shall be placed in a 600 mL beaker so that no contact is made between individual, banded specimens. A 1/4 inch layer of glass beads at the bottom of the beaker or a coupon suspension

Downloaded from http://www.everyspec.com

system as outlined in 4.7.8.1.5 shall be used to stabilize the specimen position. Enough liquid shall be added to completely immerse the specimens, and a watch-glass or equal shall be placed over the beaker to retard evaporation (but allow air access) and act as a dust cover. The assemblies shall be allowed to stand at a temperature of 35 ± 2°C for 28 days.

4.7.8.2.4 Results. The specimens shall be monitored daily over the 28-day period to ascertain the presence or absence of pitting. These daily examinations shall be made without disturbing the test (other than removing the cover). Corrosion is customarily signaled by the appearance of a dark spot which, if removed after sufficient exposure, discloses a corrosion pit. If the suspected area cannot be positively identified by the naked eye, a magnification of 10X shall be used. At the end of the test, each specimen shall be inspected carefully with particular attention being given to the edges of the specimens and those areas of the specimens under, or adjacent to the rubber bands. 10X magnification shall be used, if necessary.

4.7.9 Total halides. The halide content shall be determined in accordance with ASTM D 1821, except for the following modifications:

(1) 4 ± 0.1 grams shall be weighed, or 4 ± 0.1 mL shall be added, into a 250 mL beaker.
(2) 75 mL of acetone shall be added. Add 2 mL of dilute nitric acid (one volume of concentrated acid to 60 volumes of water) shall be added.
(3) The calculation shall be modified as follows: halide content, parts per million (ppm) = 44.4(A-B).

4.7.10 Dry chemical compatibility. The foam's compatibility with potassium bicarbonate dry chemical extinguishing agent shall be determined by measuring the burnback time in the presence of the dry chemical.

4.7.10.1 Test materials. The fuel shall be not less than 95 weight percent n-heptane as specified in 4.7.1.2. The dry chemical agent shall conform to O-D-1407. The sieve shall be an 8 inch diameter 40-mesh sieve conforming to type I, style A of RR-S-366.

4.7.10.2 Test procedure. A 28 square-foot fire test shall be conducted in accordance with 4.7.14.5 using an ocean water solution of type 3 or 6 AFFF concentrate, as required, to extinguish the fire. Before placing the burnback pan, 1 pound of dry chemical agent shall be evenly distributed over the foam blanket with the aid of a sieve (as described in 4.7.10.1) on a long handle. This shall be accomplished within a 30 second period so that the total time from end of foam application to placement of the burnback pan shall be no longer than 90 seconds. The burnback time shall be determined in accordance with 4.7.14.7 and 4.7.14.8.

4.7.11 Stability. The stability of the concentrates shall be determined by testing samples after they have been subjected to an artificial aging process.

Downloaded from http://www.everyspec.com

4.7.11.1 Sample preparation. Samples of the concentrate, and type 3 or type 6 AFFF ocean water solutions shall be prepared in sufficient quantity (approximately ten liters for type 3 and twenty liters for type 6) to perform the tests outlined in (a) through (d) below. Additionally one liter of type 3 or type 6 AFFF ocean water solutions, as appropriate, shall be prepared to perform tests (e) and (f) below. All samples shall be placed in lightly stoppered borosilicate glass cylinders. The samples shall be artificially aged in an oven at 65 ± 2.0°C for 10 days. The samples shall then be subjected to the following tests:

(a)	Spreading coefficient	4.7.5
(b)	Foamability	4.7.6
(c)	Film formation and sealability	4.7.7
(d)	Fire performance (28 square-foot) (see table II and IIIA)	4.7.14
(e)	Stratification	4.7.16
(f)	Precipitation	4.7.17

4.7.11.1.1 Precipitation test sample preparation. In the preparation of the samples to be used for the precipitation test, the ocean water shall be filtered prior to use.

4.7.12 Inter-agent compatibility. The Government will provide samples of appropriate type qualified products to manufacturers officially authorized to submit candidate material for qualification (see 3.3.3). Mixtures of the concentrates to be tested shall be prepared in sufficient quantity to perform the tests outlined in (a) through (c) below (for qualification testing, NAVSEA shall determine the number of product mixtures to be evaluated and the mixture ratios to be used). Additionally, one liter of type 3 or type 6 AFFF ocean water solutions, as appropriate, shall be prepared to perform tests (d) and (e) below. All samples shall be placed in lightly stoppered borosilicate glass cylinders. The samples shall be artificially aged in an oven at 65 ± 2.0°C for 10 days. The samples shall then be subjected to the following tests:

(a)	Foamability	4.7.6
(b)	Film formation and sealability	4.7.7
(c)	Fire performance (28 square-foot) (see tables II and IIIA)	4.7.14
(d)	Stratification	4.7.16
(e)	Precipitation	4.7.17

4.7.13 Environmental impact. Environmental impact shall be tested as specified in 4.7.13.1 through 4.7.13.3.

4.7.13.1 Toxicity. Toxicity test shall be performed on the killifish (fundulus herteroclitus) in accordance with ASTM E 729, using dynamic procedures. The minimum acceptable dissolved oxygen content of water used in this procedure shall be 5 ppm.

4.7.13.2 Chemical oxygen demand (COD). COD shall be determined in accordance with procedures in Standard Methods for the Examination of Water and Waste Water.

Downloaded from http://www.everyspec.com

4.7.13.3 Biodegradability. Biodegradability shall be determined by dividing the value expressed in milligrams per liter (mg/L) for the 20 day biological oxygen demand (BOD_{20}) test by the value expressed in mg/L for chemical oxygen demand (COD) determined as specified in 4.7.13.2. The BOD_{20}shall be conducted in accordance with the procedure specified for the 5 day BOD test in Standard Method for the Examination of Water and Waste Water (latest applicable Edition).

4.7.14 Twenty-eight square-foot fire test. The 28 square-foot fire test procedure shall consist of two phases. The number of tests and the order in which they are to be performed shall be as shown in tables II. The first phase shall test the agent's extinguishing ability and the second phase shall test its resistance to burnback. The passing criterion for the extinguishing phase of the test shall be 100 percent extinguishment (as visually observed) in the allotted time as specified in 3.4 (see table IIIA). The passing criterion for the burnback phase of the test shall be a maximum of 15 percent reinvolvement at the times specified in 3.4 (see table IIIA). The judgment of 15 percent burnback shall be based on data collected by the instrumentation setup specified in 4.7.14.3.4 which shall be analyzed using the techniques specified in 4.7.14.8.

4.7.14.1 Test building. The fire tests shall be conducted indoors in a test building of sufficient size and ventilation capacity to ensure reliable and reproducible test results. The ambient air temperature in the building prior to testing shall be 21.1 ± 8.3°C.

4.7.14.2 Test results retention. A permanent record of all test results and instrumentation data collected shall be kept for future inspection. These records may be kept either on handwritten data collection sheets or on computer diskettes. A data acquisition system should be used and shall have a minimum scan rate of 0.2 per second (one scan every 5 seconds). The data logger shall be capable of resolving a change in radiant heat flux of 0.0001 Watt per square centimeter. The error in the zero reading and noise level shall both be below 0.0001 Watt per square centimeter. Time and all four radiometer outputs shall be recorded for each scan. In addition to radiometer data, a videotape or motion picture record shall be made of each test performed. These records shall be kept for at least 2 years.

4.7.14.3 Test equipment. The fire test shall be conducted using the test pan and AFFF delivery system shown on figures 5 and 6 and specified in 4.7.14.3.1 and 4.7.14.3.4.

4.7.14.3.1 Twenty-eight square-foot test pan. This test pan shall be 6 feet in diameter and shall be made of 1/4 inch thick 304 stainless steel and shall conform to the dimensions and configurations shown on figures 5 and 6. During testing, the pan shall contain a 1 inch deep (measured at the center) substrate of water at 21.1 ± 8.3°C.

4.7.14.3.2 AFFF delivery system. The nozzle system shall be a fixed type system having four application points. It shall consist of a flow control/ aspiration device, four low flow spray nozzles spaced equally around the perimeter of the pan, and the required connecting piping as shown on figures 5 and 6.

Downloaded from http://www.everyspec.com

4.7.14.3.2.1 Flow control/aspirating device. This device is a modification of the nozzle described in 4.7.6. The wing tip spreader is removed from the nozzle which is then connected in line with the system piping as shown on figures 5 and 6. The flow shall be controlled by operating the device at 100 lb/in^2 gauge on the intake side. This flow rate should be checked and adjusted daily.

4.7.14.3.2.2 System piping. The piping downstream of the flow control device shall be nominal 1 inch diameter, schedule 40 galvanized steel. It shall be installed as shown on figures 5 and 6.

4.7.14.3.2.3 Nozzle type. The nozzles shall be Floodjet type 1/4 K 20 brass spray nozzles or equal. They shall be installed in the piping so that they project a horizontal, 60 degree fan shaped pattern as shown on figure 7 (see 6.7).

4.7.14.3.3 Burnback pan. The burnback pan shall be 1 foot in diameter and shall be made entirely of 1/8 inch thick 304 stainless steel except for the bottom piece which shall be 1/4 inch thick. It shall conform to the dimensions and configurations shown on figure 8.

4.7.14.3.4 Instrumentation. The instrumentation used to measure 15 percent burnback times shall consist of four radiometers which are to be located around the test pan as shown on figures 9 and 10.

4.7.14.3.4.1 Radiometers. The four radiometers shall be of a Gardon type, water cooled, and shall be fitted with a sapphire window so that only radiative heat is measured. Additionally they shall have 90 degree view restrictor attachments installed to limit the viewing angle so that background noise from the surroundings is limited. The maximum range shall be at least 10 British Thermal Units per second per square foot ($Btu/s/ft^2$), and the sensitivity of the transducer shall not be reduced by more than 60 percent when the sapphire window attachment is installed (for example, Medtherm model 64TP-10-23 or equal). They shall be spaced evenly around the perimeter of the pan, 12 feet radially out from the edge, and 12 feet above the floor. They shall be mounted so that the front face is perpendicular to the floor and the window is aimed at the vertical centerline of the test pan. The temperature of the cooling water supplied to the radiometers shall be kept constant during the tests.

4.7.14.4 Test materials. Foam shall be generated from AFFF solutions premixed at 23 $\pm$ 2°C. All solutions shall be made with ocean water conforming to ASTM D 1141 except for full strength solutions which shall be made using either fresh or ocean water for the tests specified in table II. All solutions shall have the concentration values shown in table VI. The fuel used for the fire test shall be 10 gallons of 95 percent purity n-heptane conforming to 4.7.1.3. The fuel used in the burnback pan shall be 1/2 gallon of motor gasoline conforming to VV-G-1690. Both fuels shall have a temperature of 21.1 $\pm$ 8.3°C.

Downloaded from http://www.everyspec.com

TABLE VI. AFFF test concentration values.

Solutions	Type 3	Type 6
Half strength	1.5 ± .03	3.0 ± .05
Full strength	3.0 ± .05	6.0 ± .10
Double strength	6.0 ± .10	12.0 ± .20
Quintupled strength	15.0 ± .20	30.0 ± .20

4.7.14.5 Extinguishment phase test procedures for half, full and double strength solutions. The nozzles shall be covered and the system pre-flowed for 20 seconds to ensure that all foam from the previous test has been expelled from the system's piping, and also to ensure that good quality foam is ready to be discharged from the nozzles. The fuel shall then be poured within 30 seconds, and the fire lit within 15 seconds of the completion of fueling. A preburn period of 10 seconds shall be allowed before the foam system is activated. The fire extinguishment time shall be measured as the elapsed time from system activation to complete cessation of all flame, as visually observed. Foam application shall continue for the times listed in table IIIA regardless of what happens with extinguishment. If the fire is 100 percent extinguished in the allotted time, then the burnback test as specified in 4.7.14.7 shall be performed.

4.7.14.6 Extinguishment phase test procedure for quintuple strength solutions. Extinguishment using quintuple strength solutions shall be effected manually by using the handheld nozzle described in 4.7.6. The nozzle shall be preflowed for 20 seconds to purge the supply line. The fuel shall then be poured within 30 seconds, and the fire lit within 15 seconds of the completion of fueling. A preburn period of 10 seconds shall be allowed prior to foam discharge. After the preburn period, the fire shall be attacked and extinguished as expeditiously as possible. Movement of the fire fighter around the perimeter of the pan shall be limited to 90 degrees in either direction from the starting point. The extinguishment time shall be measured as the elapsed time from beginning of discharge to complete cessation of all flame, as visually observed. Foam application shall continue for a total of 90 seconds. If the fire is 100 percent extinguished in the allotted time, then the burnback test specified in 4.7.14.7 shall be performed.

4.7.14.7 Burnback phase test procedure for all tests. Within 30 seconds of the completion of foam application, the burnback pan (as described in 4.7.14.3.3) shall be placed in the center of the 28 square-foot test pan. The burnback pan shall contain 0.5 ± 0.1 gallon of motor gasoline conforming to VV-G-1690. As soon as the pan is positioned it shall be lit and data collection begun. Flux level data shall be collected every 5 seconds. The burnback pan shall be left in for the entire duration of the burnback phase of testing. Once the fire has spread to involve approximately 50 percent of the test pan, the fire may be extinguished and the pans drained and cleaned for the next test. The data shall then be evaluated using the procedure described in 4.7.14.8.

Downloaded from http://www.everyspec.com

4.7.14.8 Determination of 15 percent burnback time. The time at which 15 percent (4.2 square-feet) of the 28-square-foot test pan is reinvolved in fire shall be determined by evaluating at each data collection time step, the percent increase of the flux level over an initial background average. For the purposes of the evaluation, the flux level at each time step shall be the average of the four individual radiometer readings obtained at that time step. The evaluation shall be performed using the steps outlined below.

4.7.14.8.1 Calculation of average background flux. The average background flux level of the burnback pan fire shall be determined for a 2 minute interval. The 2 minute interval shall start 1 minute after the burnback pan has been lit. The first and last reading used to calculate this average shall not differ by more than 100 percent of the first reading.

4.7.14.8.2 Calculation of the percent increase. Starting with the time step immediately following the 2 minute background interval, evaluation will begin to determine the percent increase of the flux level over the average background reading. A three point average around each time step shall be used for the comparison. The three point average will include the flux levels for the time step of interest, the time step just prior to the time step of interest, and the time step just after the time step of interest, as shown in the equation:

$$F_{avg}(i) = \frac{F(i-1) + F(i) + F(i+1)}{3}$$

Where:

i = the time step of interest
$F_{avg}(i)$ = the three point average flux for the time step of interest
$F(i)$ = the flux level for time step i

The three point average obtained above for each time step shall be compared to the 2 minute average background reading and the percent increase calculated as follows:

$$\text{percent increase} = \frac{F_{avg} - F_{bkg}}{F_{bkg}} * 100\ \%$$

Where:

F_{avg} = the three point average flux for the time step of interest
F_{bkg} = the 2 minute average background flux level

When the percent increase is equal to or greater than 300 percent, then the burnback criterion shall have been met and the time corresponding to the time step of interest shall be recorded as the burnback time.

4.7.15 Fifty square-foot fire test. The 50 square-foot fire test procedure shall consist of two phases. The number of tests to be performed and the passing criterion shall be as shown in tables II and IIIB. The first phase shall test the agent's extinguishing ability and the second phase shall test its resistance to burnback. The passing criteria for extinguishment shall be 100 percent extinguishment (as visually observed) in the required time, as well as a 40 second

Downloaded from http://www.everyspec.com

summation time (also visually observed) of 320 seconds. The 40 second summation value shall be determined as described in 4.7.15.4. The passing criteria for the burnback tests shall be a maximum of 25 percent reinvolvement at the times specified in table IIIB.

4.7.15.1 Test site. The fire test shall be conducted on a level, circular area 8 feet in diameter. The base and surrounding wall shall be suitable for containment of the fuel on a substrate of water. The water depth shall be the minimum required to ensure complete coverage of the area with fuel. If the tests are to be run outdoors, the temperature must be above 10°C and the winds may not be in excess of 2-3 knots.

4.7.15.2 Test equipment. The nozzle used to apply the foam shall be the 2 gal/min device specified in 4.7.6. It shall be operated at an inlet pressure of 100 lb/in^2.

4.7.15.3 Test materials. The foam shall be a full strength solution as specified in 4.7.14.4. The test fuel shall be 15 gallons of n-heptane as specified in 4.7.1.2.

4.7.15.4 Test procedure. The fuel shall be poured into the test area within 60 seconds and ignited within 30 seconds of completion of pouring. After allowing a preburn period of 10 seconds the fire shall be manually attacked by an experienced firefighter and extinguished in an expeditious manner. Movement of the firefighter shall be limited to 90 degrees in either direction of the initial point of attack. At 10 second intervals after the start of foam application, an observer shall visually estimate the percentage of fire area extinguished. The percent extinguished at 10, 20, 30, and 40 seconds shall then be totaled to give the 40 second summation value. The exact extinguishing time shall also be recorded at the cessation of all flame, but foam application shall continue for a total of 90 seconds.

4.7.15.5 Burnback procedure. Within 60 seconds of the completion of foam application, the burnback pan described in 4.7.14.3.3, containing 1/2 gallon of motor gasoline as described in 4.7.14.4, shall be placed in the center of the foam blanket and lit. Timing shall begin when the burnback pan is lit and the pan shall remain in place for the duration of the test. The burnback time is that time at which it is estimated that 25 percent (12.5 square-feet) of the pool has become reinvolved in fire. NOTE: Intermittent "flashovers" may occur across the foam surface. They are characterized by faint blue or nearly invisible flames creeping around the foam surface, and are usually self-extinguished. They shall not be considered as part of the burnback area unless sustained burning occurs as a result. In that case all isolated, sustained burning areas shall be included in arriving at the 25 percent area.

4.7.16 Stratification. The presence of stratification shall be determined by visual examination of the samples contained in 1 liter borosilicate glass cylinders.

4.7.17 Precipitation. The amount of precipitation shall be determined by centrifuging a 100 mL sample withdrawn from a 1 liter sample after thorough agitation in accordance with ASTM D 96.

Downloaded from http://www.everyspec.com

4.7.18 Fluorine content. The total fluorine content shall be determined as specified in 4.7.18.1 through 4.7.18.4. The fluoride ion content reported shall be the average of three separate tests on each AFFF concentrate.

4.7.18.1 Test apparatus. The following items shall be used to determine the fluorine content of AFFF concentrate:

(a) Balance Mettler H51 or equal.
(b) Gelatin capsules (0.6 mL capacity).
(c) Schöniger combustion flask, quartz, 1000 mL.
(d) Wrist action mechanical shaker, Burnell model 75 or equal.
(e) Volumetric flasks, 100 mL.
(f) Polyethylene beakers, 150 mL.
(g) Plastic bottle, 125 mL.
(h) Magnetic stirrer and stirring bars.
(i) Fluoride electrode - Orion 94-09 or equal.
(j) Single junction electrode - Orion 90-01 or equal.
(k) Sample wrapper (42 ashless filter paper).
(l) Ionanalyzer - Orion 901 or equal pH meter with expandable scale capable of reading 0.1 millivolt.

4.7.18.2 Test reagents. The following reagents shall be used to determine the fluorine content of AFFF concentrate:

(a) Deionized water.
(b) Total ionic strength adjusting buffer (TISAB) II: Orion 94-09-09A or equal shall be prepared as follows:

(1) Place 500 mL distilled water in a 1 liter beaker.
(2) Add 57 mL glacial acetic acid, 58 grams NaCl and 4 grams cyclohexylene dinitrilo tetraacetic acid (CDTA). Stir to dissolve.
(3) Place beaker in a water bath for cooling. Immerse a calibrated pH electrode into the solution, and slowly add 5M NaOH (about 150 mL) until the pH is between 5.0 and 5.5. Cool to room temperature.
(4) Pour into a 1 liter volumetric flask and dilute to mark with distilled water.

(c) Fluoride standards (100, 10, 1 ppm) Orion 94-09-07 or equal.

4.7.18.3 Calibration of equipment. Pipet 5 mL of 100 ppm fluoride standard and 50 mL of TISAB into a 100 mL volumetric flask. Add distilled water to the mark and mix solution thoroughly. This solution shall be designated as "10 ppm" standard solution. Pipet 10 mL of the 10 ppm standard solution and 45 mL of TISAB into a 100 mL volumetric flask then fill to the mark with distilled water to make a "1 ppm" standard solution. These solutions shall be used as standards to calibrate the electrodes. Electrodes shall be placed into the 10 ppm standard while the standard is being stirred. The ionanalyzer shall be set to read millivolts and shall be properly calibrated (set readings to 000.0 on calibration

Downloaded from http://www.everyspec.com

controls). The electrodes shall be rinsed, blot dried, and placed in the 100 ppm standard. Record the millivolt reading after it has become stable. This procedure shall be repeated for 1 ppm standard. The millivolt reading (linear axis) shall be plotted against concentration (log axis) on standard 3 cycle semi-logarithmic paper. (Note: Direct reading of the concentration can be obtained on some pH/Ion meters.

4.7.18.3.1 Test procedure. A sample of 20 mg of AFFF concentrate shall be weighed into gelatin capsule. The capsule shall be wrapped in sample paper and placed in the platinum basket of Schöniger head. Twenty mL of deionized water shall be transferred with a pipette into the combustion flask, and the flask shall be flushed with oxygen for 30 seconds. The sample paper shall be ignited in a flame and the Schöniger head shall be inserted into the combustion flask, which is simultaneously inverted so that the solution inside the flask forms a seal around the head. (Note: Proper safety procedures shall be followed at all times. The inserting of the ignited Schöniger paper into combustion flask shall be done behind a safety shield.) The Schöniger head and flask shall be held firmly together during the few seconds that combustion takes place. (Note: During the combustion process, a positive pressure is generated.) After combustion is complete, a few mL of distilled water shall be added to combustion flask/head lip to seal it. The combustion flask shall be placed on a mechanical shaker for 25 minutes at speed 4. After 25 minutes of mechanical shaking, the flask shall be slowly opened to allow distilled water sealing the lip to flow in. Quantitatively transfer the contents of the combustion flask to a 100 mL volumetric flask. Repeatedly, rinse the Schöniger head and combustion flask with small amounts of distilled water and transfer the washings to the 100 mL volumetric flask until flask is nearly full. Complete filling of volumetric flask with distilled water to the 100 mL mark. This solution shall be mixed well and transferred to a plastic bottle. This part of the procedure shall be repeated to obtain at least three samples of the same AFFF concentrate for analysis. Fifty mL of sample and 50 mL TISAB shall then be transferred to a polyethylene beaker and stirred thoroughly. The electrode shall be rinsed, blot dried, and placed in sample while the sample is being stirred. The reading shall not be recorded until it is stable. The fluoride ion concentration shall be determined from the calibration curve. The ionanalyzer shall be re-calibrated after 1 to 2 hours of use. If the ambient temperature has not changed, electrodes shall be placed in a 10 ppm standard and the analyzer shall be re-zeroed. If ambient temperature has changed, procedure for calibration of equipment shall be repeated (see 4.7.18.3).

4.7.18.4 Calculating of fluoride ion content. To determine the percent F-in the AFFF concentrate sample, the following calculation shall be used:

$$\text{Percent F- in sample} = \frac{SA}{SW} \times 10$$

Where:

SA = sample amount of fluoride in ppm (taken from calibration curve or by direct reading of Ionanalyzer.

SW = sample weight in mg.

The fluoride ion content reported on each AFFF concentrate shall be the average of the three samples.

Downloaded from http://www.everyspec.com

4.7.19 Inspection of packaging. Sample packages and packs, and the inspection of the preservation, packing and marking for shipment and storage shall be in accordance with the requirements of section 5 and the documents specified therein.

4.7.19.1 Magnetic permeability (metal handles of 5 gallon containers). The metal handles for the 5 gallon containers shall be checked to determine conformance to the magnetic requirements of 5.1.1.1(d) using a permeability indicator, low-mu (Go-No-Go) in accordance with MIL-I-17214.

4.7.19.2 Torque test (pour cap of 5 gallon container). The pour cap of the 5 gallon container shall be subjected to a torque test to determine conformance to 5.2.1.1(j). The torque test shall be conducted 48 hours after initial installation of cap.

5. PACKAGING

(The packaging requirements specified herein apply only for direct Government acquisition.)

5.1 General.

5.1.1 Navy fire-retardant requirements for lumber and plywood. Unless otherwise specified (see 6.2), all lumber and plywood including laminated veneer material used in shipping container construction members, blocking, bracing, and reinforcing shall be fire-retardant treated material conforming to MIL-L-19140 as follows:

Levels A and B - Type II, weather resistant.
Category 1, general use.
Level C - Type I, non-weather resistant.
Category 1, general use.

5.2 Preservation. Preservation for level A shall be as specified herein.

5.2.1 AFFF liquid concentrate. The AFFF liquid concentrate shall be furnished in a 5 gallon or in a 55 gallon plastic container as specified (see 6.2).

5.2.1.1 Five gallon plastic container. The container shall be molded polyethylene as specified herein. The container shall be as follows:

(a) Capacity shall be 5 gallons (minimum).
(b) Height, body (overall) shall be 15 inches (maximum).
(c) Diameter, body (overall) shall be 11-3/4 inches (maximum).
(d) Pour opening (inside dimension) shall be 1-1/2 inches (minimum).
(e) Shall be stackable and self-supporting.
(f) Shall be provided with a threaded-type plastic cap fitted with a gasket for the pour opening.
(g) Shall be provided with a vent opening having an easily punctured membrane. The vent opening shall be provided with a threaded plastic cap.

Downloaded from http://www.everyspec.com

(h) Shall be provided with an integrally molded or recessible plastic or metal handle. Metal handles shall not exceed a magnetic permeability of 2.
(i) Shall have colors conforming to 5.2.1.3.
(j) The torque required to remove the pour opening cap shall not exceed 50 inch pounds.
(k) Shall be provided with a tamper-proof seal.

The container shall meet the requirements of Department of Transportation Specification Number 34 as specified in the Code of Federal Regulations, Title 49, Part 178.19.

5.2.1.2 Fifty-five gallon container. The 55 gallon container shall be molded polyethylene, size 4, conforming to MIL-D-43703 or 55-gallon capacity conforming to PPP-D-1860.

5.2.1.3 Exterior color and coatings. The green color (see 3.5) shall be an approximate match to color number 14187 of FED-STD-595. The blue color (see 3.5) shall be an approximate match to color number 15123 of FED-STD-595. Exterior coating for steel drum overpacks shall conform to TT-E-489.

5.3 Packing. For level A, no further packing is required.

5.3.1 Method of shipment. Method of shipment shall be in accordance with the Uniform Freight Classification Ratings, Rules and Regulations or other carrier rules as applicable to the mode of transportation.

5.3.2 Palletization. Thirty-six 5 gallon plastic containers shall be palletized in accordance with the requirements of MIL-STD-147, load type XVII. Pallets conforming to NN-P-71, type V, class 1, wood group optional, size 2, are acceptable. Containers shall be properly and firmly nested and arranged to ensure a snug, non-shifting load. Pallet dimensions may be adjusted to ensure a snug, non-shifting load, but shall not exceed 43 by 52 inches.

5.4 Marking. In addition to the marking specified in 3.5, 3.5.1 and any special marking required (see 6.2), containers and palletized unit loads shall be marked in accordance with MIL-STD-129.

5.5 Material Safety Data Sheet. A copy of the Material Safety Data Sheet shall be attached to the shipping document for each destination (see 3.2.1).

6. NOTES

(This section contains information of a general or explanatory nature that may be helpful, but is not mandatory.)

6.1 Intended use. The concentrate is intended for use in mechanical foam generating equipment such as fire fighting trucks or foam sprinkler systems for extinguishing fires in flammable liquids such as gasoline or fuel oils. Type 6 is intended for use in proportioners designed to dispense only the 6 percent solution (usually shipboard fire protection systems). Type 3 may be used in any equipment capable of proportioning at variable rates or at fixed 3 percent solution.

Downloaded from http://www.everyspec.com

6.2 Acquisition requirements. Acquisition documents must specify the following.

(a) Title, number, and date of this specification.
(b) Issue of DoDISS to be cited in the solicitation, and if required, the specific issue of individual documents referenced (see 2.1.1 and 2.2)
(c) Type of concentrate required (see 1.2).
(d) When fire retardant packaging material is not required (see 5.1.1).
(e) Size of container required (see 5.2.1).
(f) Special marking, if required (see 5.4).

6.3 Consideration of data requirements. The following data requirements should be considered when this specification is applied on a contract. The applicable Data Item Descriptions (DID's) should be reviewed in conjunction with the specific acquisition to ensure that only essential data are requested/provided and that the DID's are tailored to reflect the requirements of the specific acquisition. To ensure correct contractual application of the data requirements, a Contract Data Requirements List (DD Form 1423) must be prepared to obtain the data, except where DOD FAR Supplement 27.475-1 exempts the requirement for a DD Form 1423.

Reference paragraph	DID number	DID Title	Suggested Tailoring
4.6	DI-T-5329	Inspection and test reports	-----

The above DID's were those cleared as of the date of this specification. The current issue of DOD 5010.12-L, Acquisition Management Systems and Data Requirements Control List (AMSDL), must be researched to ensure that only current, cleared DIDs are cited on the DD Form 1423.

6.4 Qualification. With respect to products requiring qualification, awards will be made only for products which are, at the time of award of contract, qualified for inclusion in Qualified Products List QPL No. 24385 whether or not such products have actually been so listed by that date. The attention of the contractors is called to these requirements, and manufacturers are urged to arrange to have the products that they propose to offer to the Federal Government tested for qualification in order that they may be eligible to be awarded contracts or purchase orders for the products covered by this specification. The activity responsible for the Qualified Products List is the Naval Sea Systems Command, SEA 55Z3, Department of the Navy, Washington, DC 20362-5101 and information pertaining to qualification of products may be obtained from that activity.

6.5 Material Safety Data Sheets. Contracting officers will identify those activities requiring copies of completed Material Safety Data Sheets prepared in accordance with FED-STD-313. The pertinent Government mailing addresses for submission of data are listed in FED-STD-313.

6.6 Specimens. Metal test specimens can be obtained through Metaspec Company, P.O. Box 6715, San Antonio, TX 78209.

Downloaded from http://www.everyspec.com

6.7 Nozzle type. The nozzles shall be Floodjet type 1/4 K 20 brass spray nozzles or equal (available from Spraying Systems, Co., Weaton, IL 60187).

6.8 Schöniger combustion flask. NOTE: Schöniger combustion flask (drawing no. 027007) can be obtained through Kontes Flask Corporation, Vineland, NJ 08360.

6.9 Subject term (key word listing).

Burnback time
Fire performance
Fluorocarbon surfactant
Foamability

6.10 Changes from previous issue. Marginal notations are not used in this revision to identify changes with respect to the previous issue due to the extensiveness of the changes.

Custodians:
Navy - SH
Air Force - 99

Review activities:
Navy - YD
Air Force - 04
DLA - CS

User activities:
Army - CE
Navy - AS, MC, OS, CG

Preparing activity:
Navy - SH
(Project 4210-0386)

Downloaded from http://www.everyspec.com

MIL-F-24385D

THIS END UP

U. S.

AQUEOUS FILM FORMING FOAM (AFFF) LIQUID CONCENTRATE

In accordance with

MILITARY SPECIFICATION MIL-F-24385D

TYPE 3 (3%)

THIS FIRE EXTINGUISHING CONCENTRATE IS FOR USE BY DILUTION WITH WATER IN FIXED OR MOBILE SYSTEMS. IT MAY BE USED ALONE OR IN COMBINATION WITH "TWINNED" DRY CHEMICAL EQUIPMENT. THE CONCENTRATE MAY BE DILUTED FOR USE IN FLOW PROPORTIONING EQUIPMENT WITH SEAWATER OR FRESH WATER AT VOLUME PROPORTIONS OF 3 GALLONS CONCENTRATE TO 97 GALLONS WATER. IT MAY ALSO BE DILUTED FOR READY-USE STORAGE AT A 3-PERCENT PREMIX SOLUTION WITH FRESH WATER. FOR READY USE DO NOT STORE BELOW 32°F. AVOID PROLONGED STORAGE ABOVE 120°F. DO NOT MIX WITH OTHER THAN LIQUID CONCENTRATE IN ACCORDANCE WITH MIL-F-24385D (AND PREVIOUS ISSUES) AND WATER.

MANUFACTURER'S NAME
ADDRESS
BATCH NO.
DATE OF MANUFACTURE

FIGURE 1. Type 3 container markings.

Downloaded from http://www.everyspec.com

MIL-F-24385D

THIS END UP

U. S.

AQUEOUS FILM FORMING FOAM (AFFF) LIQUID CONCENTRATE

In accordance with

MILITARY SPECIFICATION MIL-F-24385D

Type 6 (6%)

THIS FIRE EXTINGUISHING CONCENTRATE IS FOR USE BY DILUTION WITH WATER IN FIXED OR MOBILE SYSTEMS. IT MAY BE USED ALONE OR IN COMBINATION WITH "TWINNED" DRY CHEMICAL EQUIPMENT. THE CONCENTRATE MAY BE DILUTED FOR USE IN FLOW PROPORTIONING EQUIPMENT WITH SEAWATER OR FRESH WATER AT VOLUME PROPORTIONS OF 6 GALLONS CONCENTRATE TO 94 GALLONS WATER. IT MAY ALSO BE DILUTED FOR READY-USE STORAGE AT A 6-PERCENT PREMIX SOLUTION WITH FRESH WATER. FOR READY USE DO NOT STORE BELOW 32°F. AVOID PROLONGED STORAGE ABOVE 120°F. DO NOT MIX WITH OTHER THAN LIQUID CONCENTRATE IN ACCORDANCE WITH MIL-F-24385D (AND PREVIOUS ISSUES) AND WATER.

MANUFACTURER'S NAME
ADDRESS
BATCH NO.
DATE OF MANUFACTURE

FIGURE 2. Type 6 container markings.

Downloaded from http://www.everyspec.com

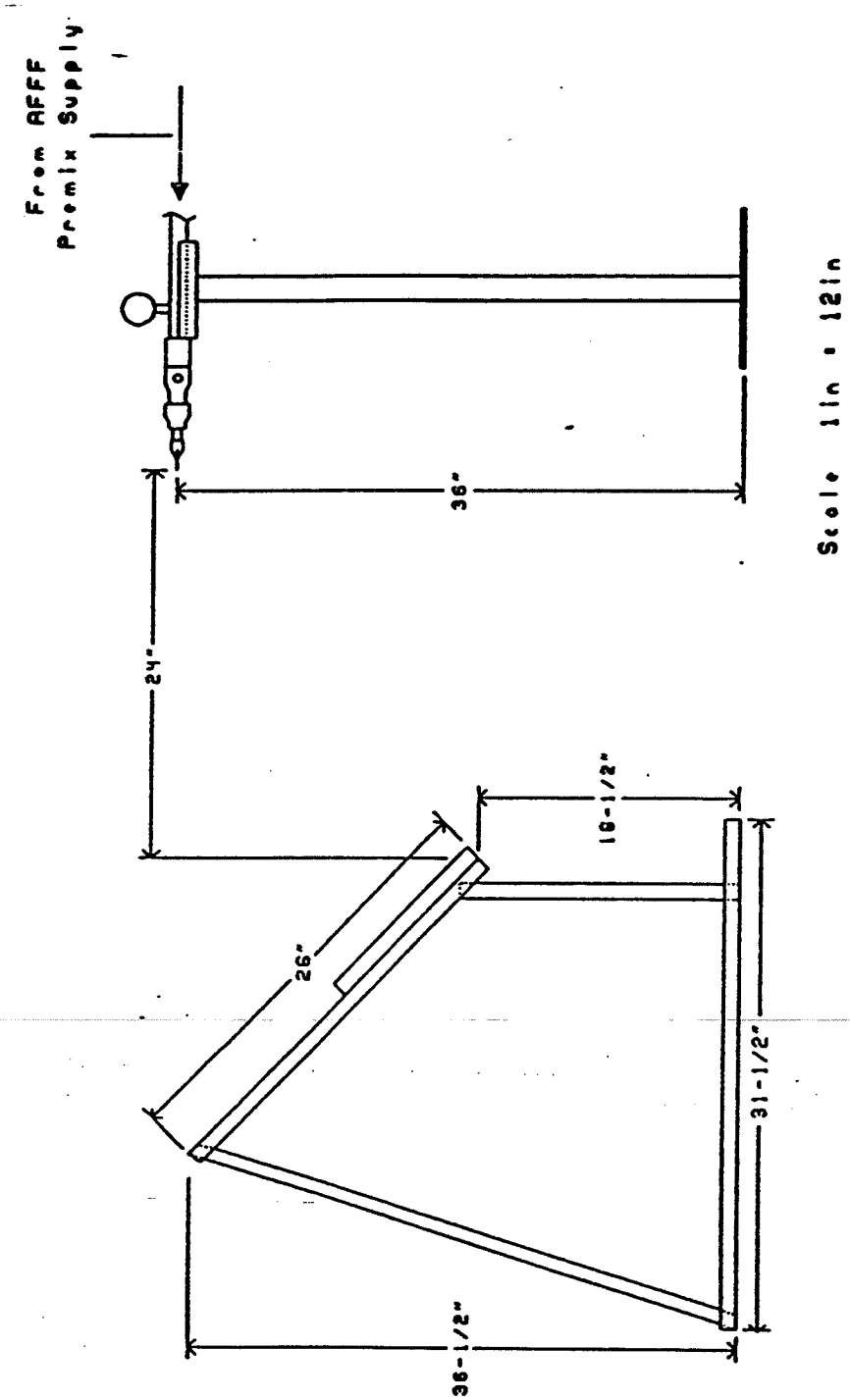

FIGURE 3. Equipment setup for expansion and drainage tests.

Downloaded from http://www.everyspec.com

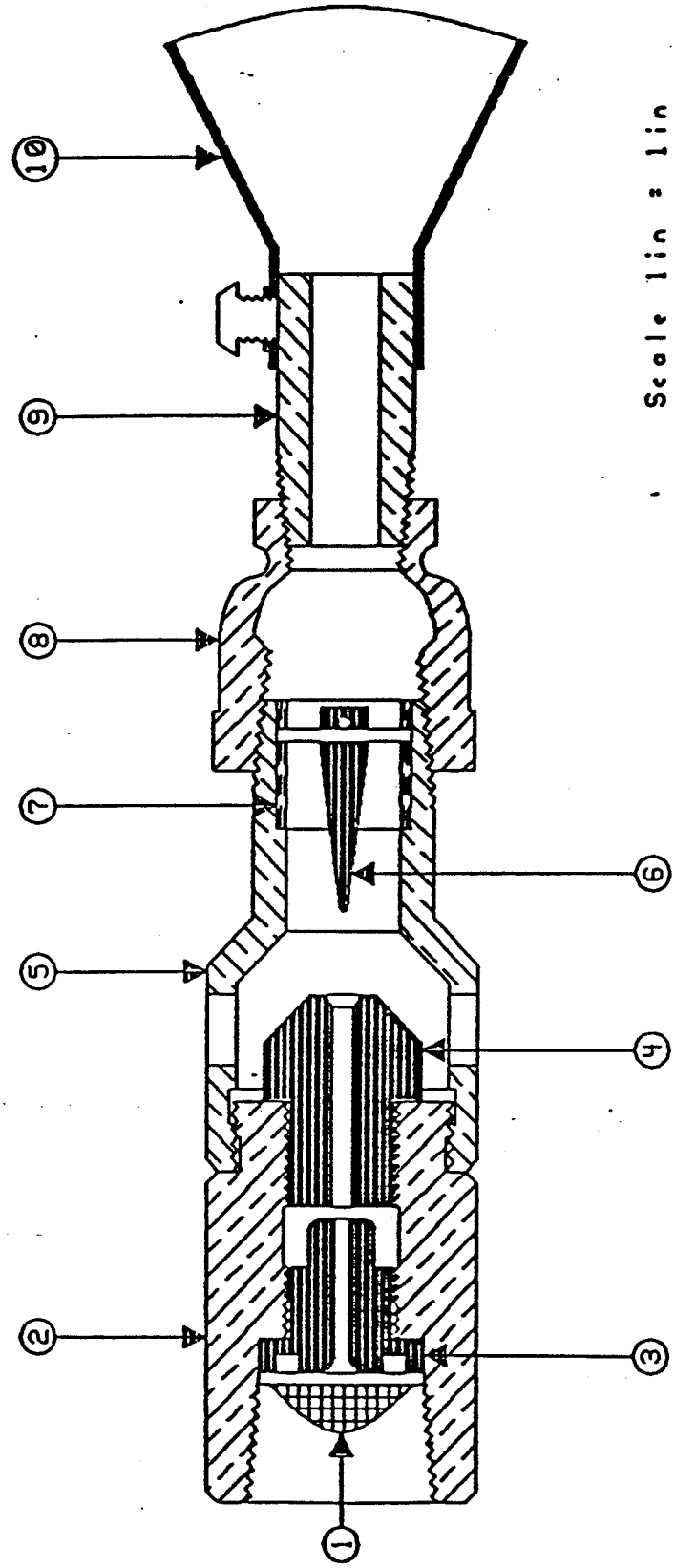

Scale 1in = 1in

1 - Strainer screen
2 - Foam maker body
3 - Flow control jet
4 - Receiver
5 - Air aspirator
6 - Dispersal cone
7 - Dispersal cone adapter (assembled with 6 and installed into 5 with silver solder
8 - Reducer, 3/4in to 3/8in
9 - Nipple, 3/8in x 1 1/4in
10 - Spreader tip

FIGURE 4. Two GPM air aspirating nozzle assembly.

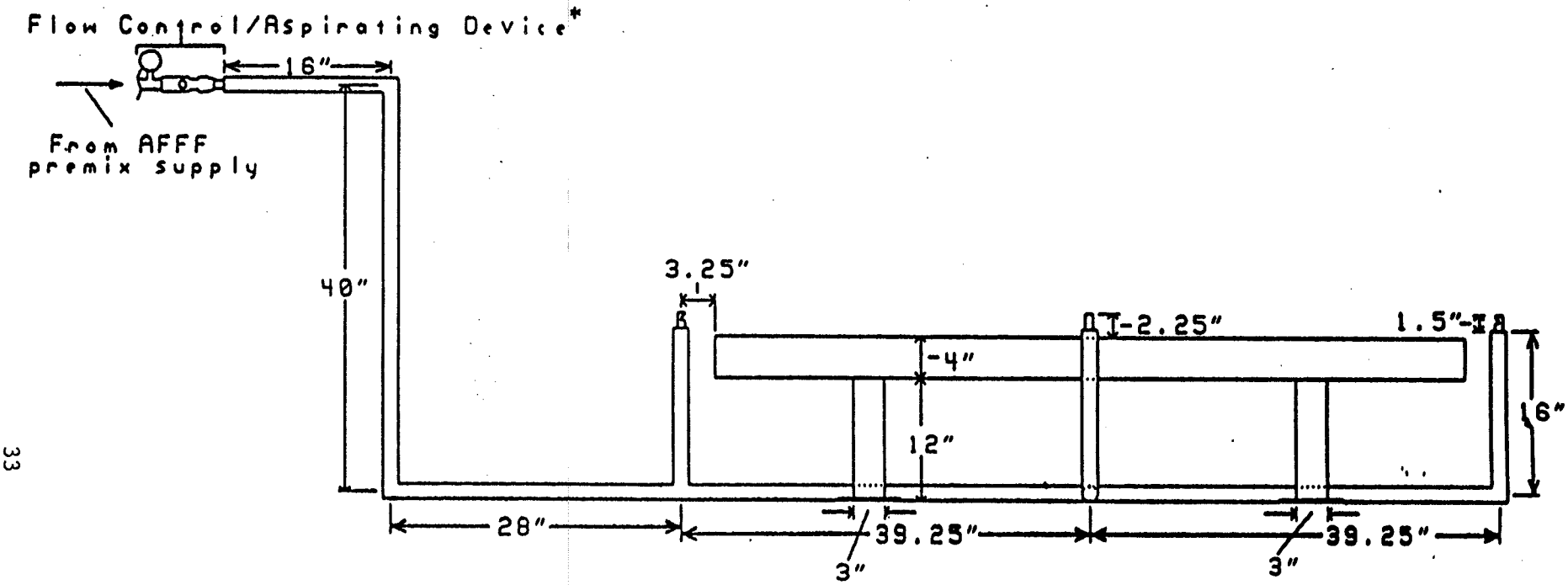

*Notes:

- For details of flow Control/ Aspirating device, see Figure 4
- All pipe 1in schedule 40

Scale 1in = 16in

FIGURE 5. AFFF delivery system and test pan (side view).

Downloaded from http://www.everyspec.com

Downloaded from http://www.everyspec.com

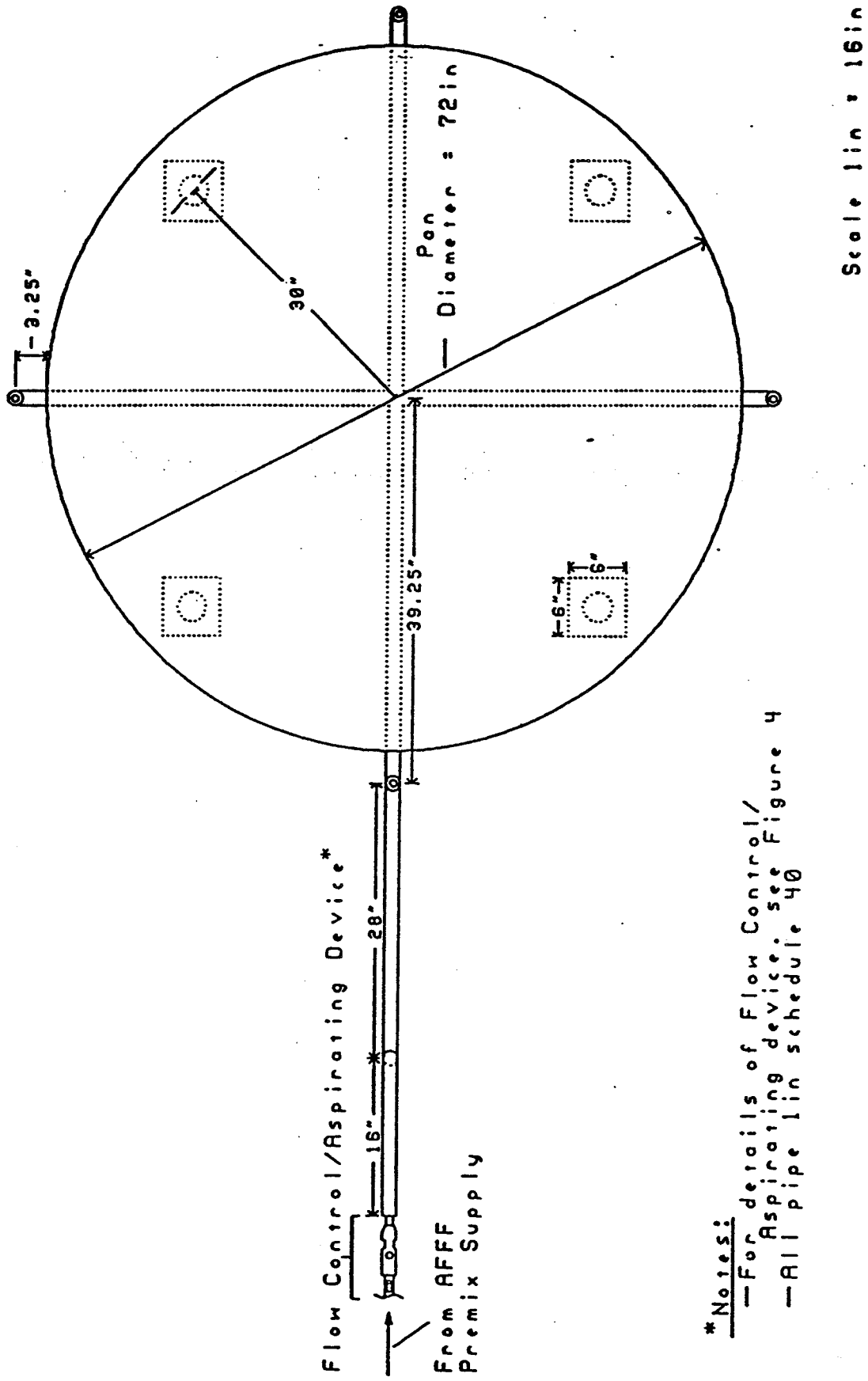

FIGURE 6. AFFF delivery system and test pan (top view).

Downloaded from http://www.everyspec.com

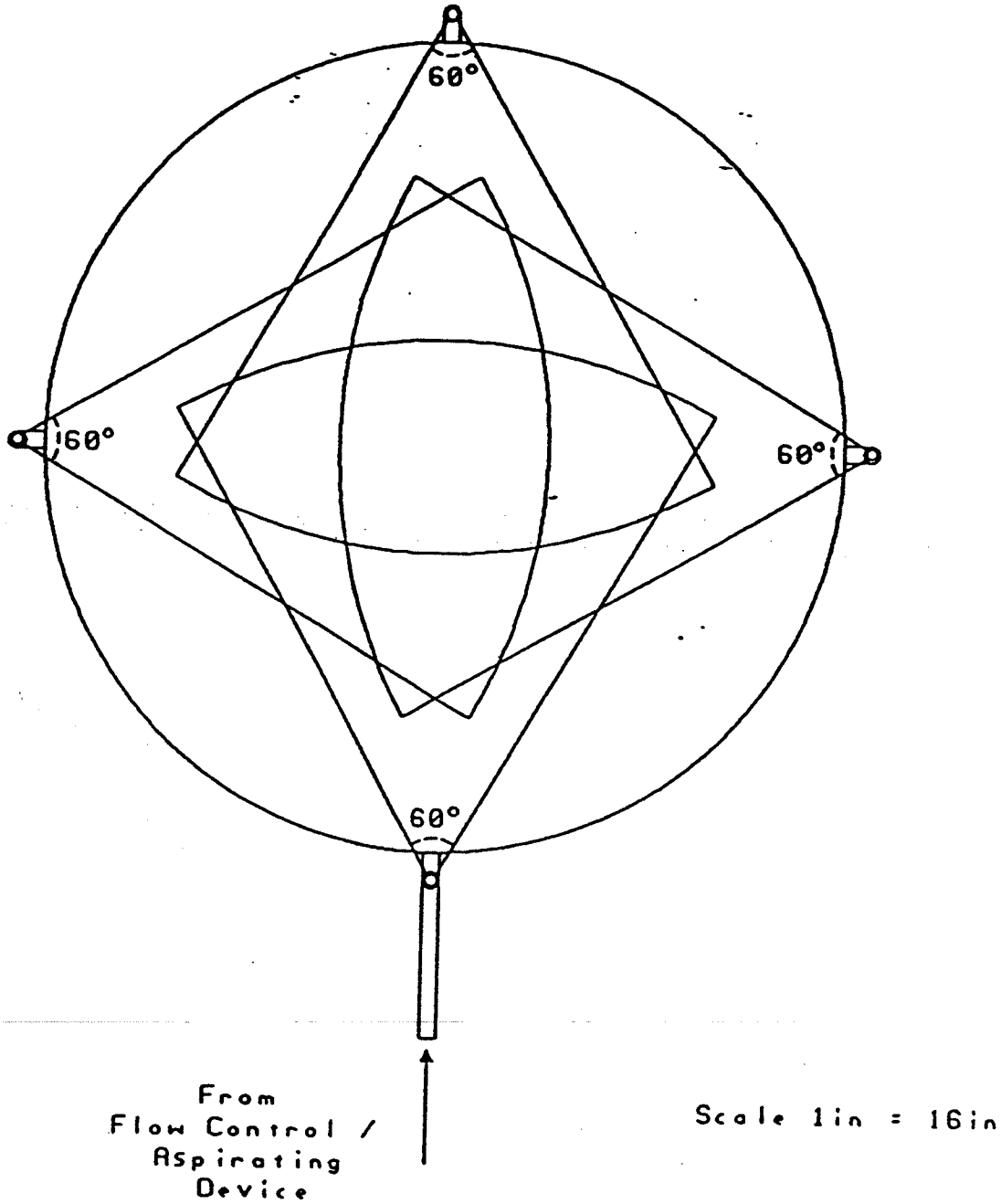

FIGURE 7. Spray pattern to be properly adjusted nozzles.

Downloaded from http://www.everyspec.com

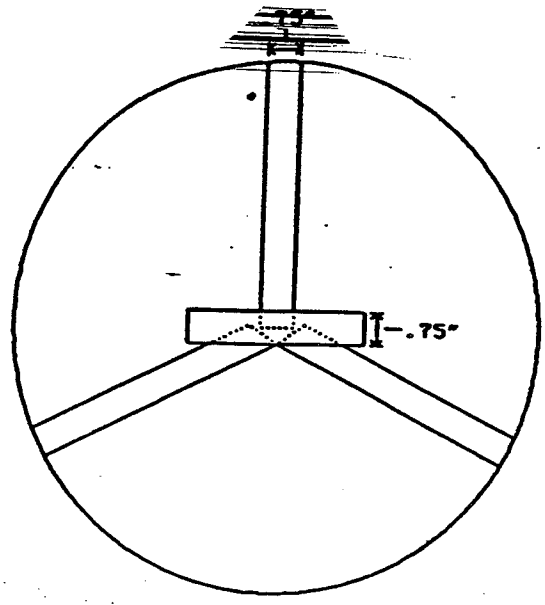

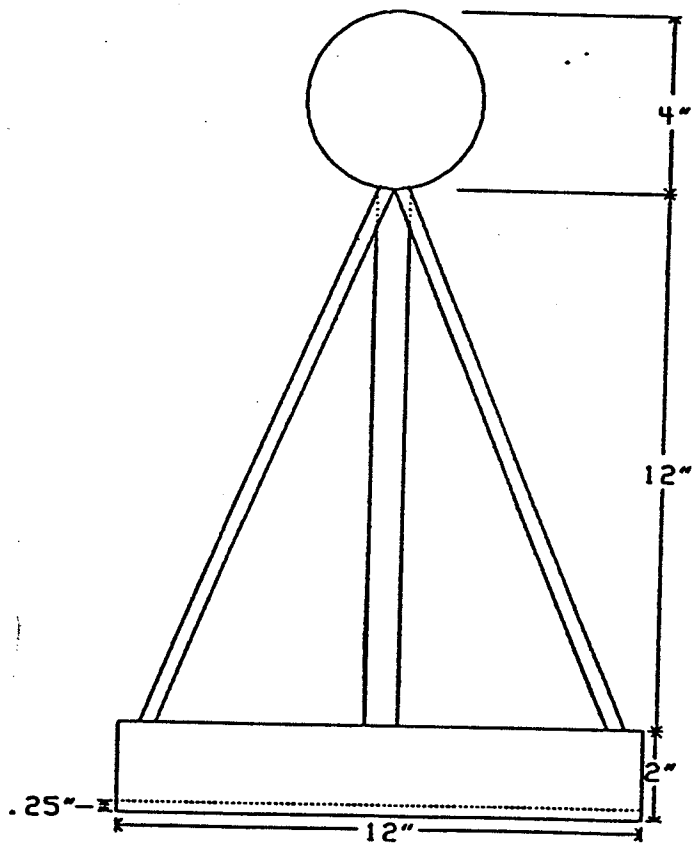

Notes:
All parts except bottom made from 1/16 in stainless steel

Scale 1in = 4in

FIGURE 8. Burnback pan.

Downloaded from http://www.everyspec.com

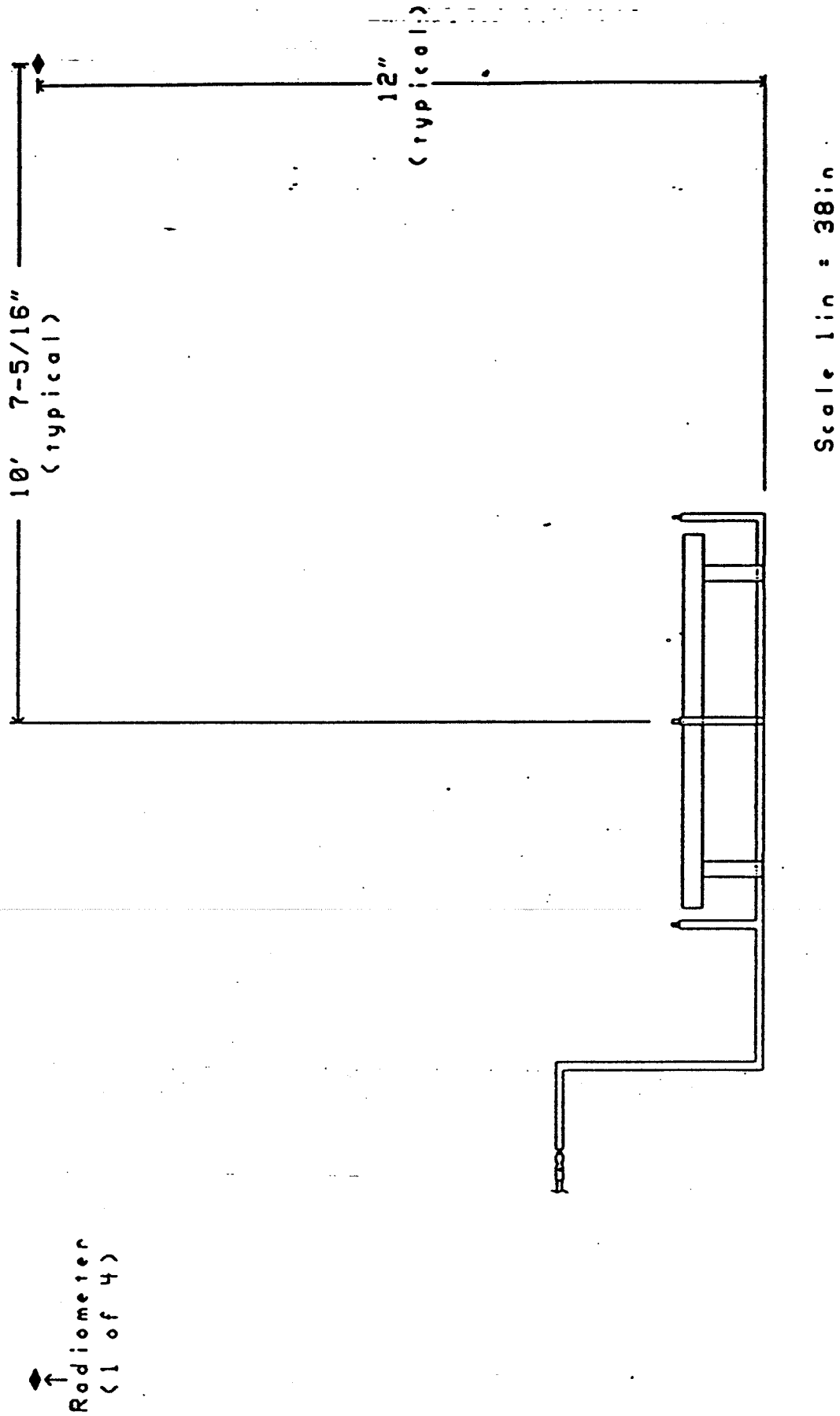

FIGURE 9. Side view of radiometer in relation to test pan.

Downloaded from http://www.everyspec.com

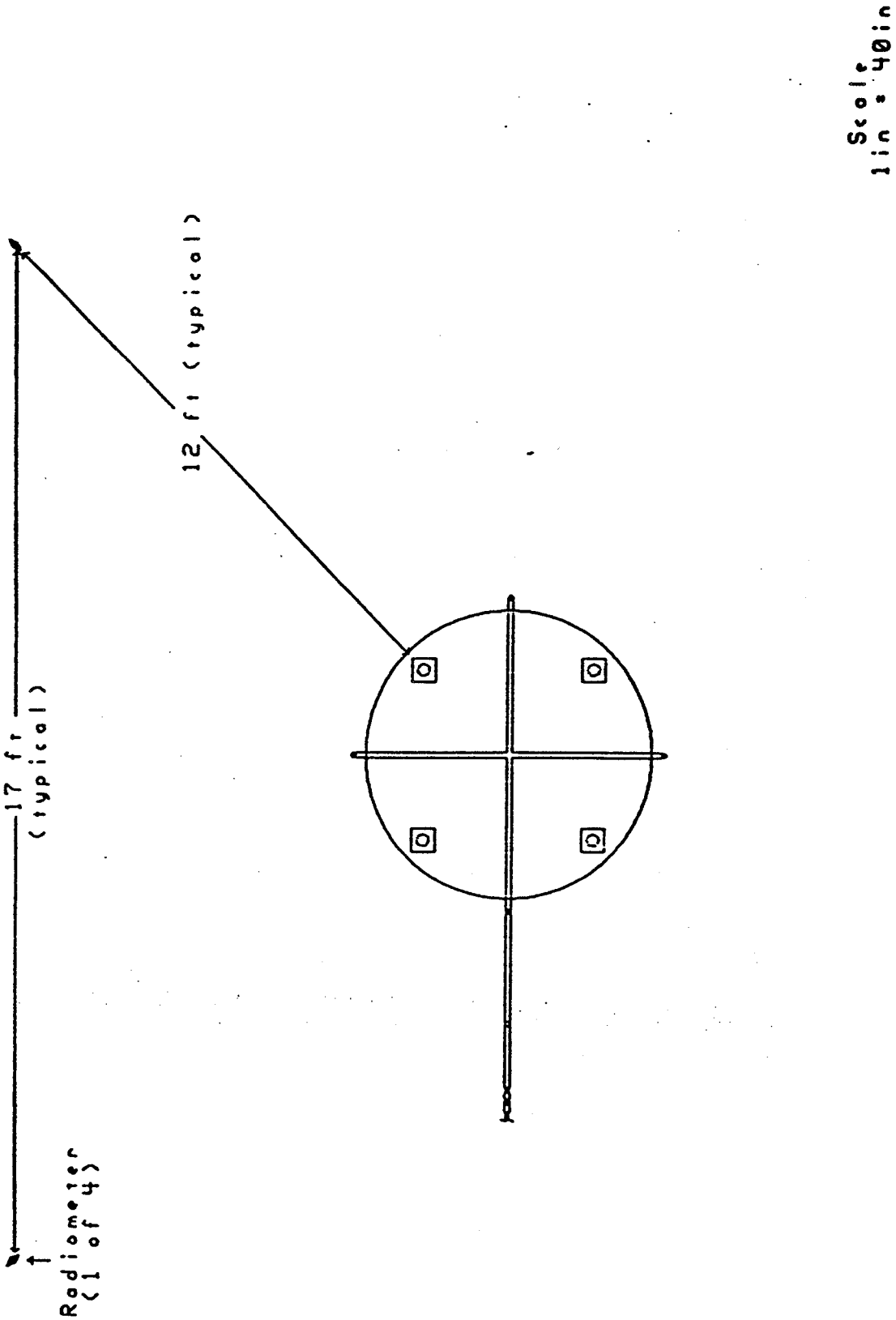

FIGURE 10. Top view of radiometers in relation to test pan.

Downloaded from http://www.everyspec.com

STANDA)IZATION DOCUMENT IMPROVEMI ˙PROPOSAL

(See Instructions – Reverse Side)

1. DOCUMENT NUMBER	2. DOCUMENT TITLE
MIL-F-24385D	FIRE EXTINGUISHING AGENT, AQUEOUS FILM-FORMING FOAM (AFFF) LIQUID CONCENTRATE, FOR FRESH AND SEAWATER

3a. NAME OF SUBMITTING ORGANIZATION

b. ADDRESS *(Street, City, State, ZIP Code)*

4. TYPE OF ORGANIZATION *(Mark one)*

- ☐ VENDOR
- ☐ USER
- ☐ MANUFACTURER
- ☐ OTHER *(Specify)*: _____

5. PROBLEM AREAS

a. Paragraph Number and Wording:

b. Recommended Wording:

c. Reason/Rationale for Recommendation:

6. REMARKS

7a. NAME OF SUBMITTER *(Last, First, MI)* – Optional

b. WORK TELEPHONE NUMBER *(Include Area Code)* – Optional

c. MAILING ADDRESS *(Street, City, State, ZIP Code)* – Optional

8. DATE OF SUBMISSION *(YYMMDD)*

(TO DETACH THIS FORM, CUT ALONG THIS LINE.)

DD FORM 82 MAR 1426

PREVIOUS EDITION IS OBSOLETE.

Downloaded from http://www.everyspec.com

INSTRUCTIONS: In a continuing effort to make our standardization documents better, the DoD provides this form for use in submitting comments and suggestions for improvements. All users of military standardization documents are invited to provide suggestions. This form may be detached, folded along the lines indicated, taped along the loose edge *(DO NOT STAPLE)*, and mailed. In block 5, be as specific as possible about particular problem areas such as wording which required interpretation, was too rigid, restrictive, loose, ambiguous, or was incompatible, and give proposed wording changes which would alleviate the problems. Enter in block 6 any remarks not related to a specific paragraph of the document. If block 7 is filled out, an acknowledgement will be mailed to you within 30 days to let you know that your comments were received and are being considered.

NOTE: This form may not be used to request copies of documents, nor to request waivers, deviations, or clarification of specification requirements on current contracts. Comments submitted on this form do not constitute or imply authorization to waive any portion of the referenced document*(s)* or to amend contractual requirements.

(Fold along this line)

(Fold along this line)

DEPARTMENT OF THE NAVY
COMMANDER
NAVAL SEA SYSTEMS COMMAND (SEA 55Z3)
DEPARTMENT OF THE NAVY
WASHINGTON, DC 20362-5101

OFFICIAL BUSINESS
PENALTY FOR PRIVATE USE $300

NO POSTAGE NECESSARY IF MAILED IN THE UNITED STATES

BUSINESS REPLY MAIL
FIRST CLASS PERMIT NO. 12503 WASHINGTON D. C.
POSTAGE WILL BE PAID BY THE DEPARTMENT OF THE NAVY

COMMANDER
NAVAL SEA SYSTEMS COMMAND (SEA 55Z3)
DEPARTMENT OF THE NAVY
WASHINGTON, DC 20362-5101