Downloaded from http://www.everyspec.com

MIL-F-20268F(MC)
6 June 1983
SUPERSEDING
MIL-F-20268E(MC)
24 January 1983

MILITARY SPECIFICATION

FRAME, CAP, MAN'S

This specification is approved for use by the U. S. Marine Corps, Department of the Navy, and is available for use by all Departments and Agencies of the Department of Defense.

1. SCOPE

1.1 Scope. This specification covers requirements for service and dress cap frames.

1.2 Classification. The cap frames shall be in the following types, classes and sizes, as specified (see 6.2).

Type I - Black poromeric visor
Class 1 - with black poromeric chin strap
Class 2 - with gold chin strap

Type II - Black broadcloth visor
Class 1 - with field grade embroidery and gold chin strap
Class 2 - with general officer embroidery and gold chin strap
Class 3 - with general officer embroidery and black poromeric chin strap

Schedule of Sizes

6-3/8	6-7/8	7-3/8
6-1/2	7	7-1/2
6-5/8	7-1/8	7-5/8
6-3/4	7-1/4	7-3/4

2. APPLICABLE DOCUMENTS

2.1 Government documents.

2.1.1 Specifications, standards, and handbooks. Unless otherwise specified, the following specifications, standards, and handbooks of the issue listed in that issue of the Department of Defense Index of Specifications and Standards (DoDISS) specified in the solicitation form a part of this specification to the extent specified herein.

SPECIFICATIONS

FEDERAL

Beneficial comments (recommendations, additions, deletions) and any pertinent data which may be of use in improving this document should be addressed to the Commandant of the Marine Corps (LMA-1), Headquarters, U. S. Marine Corps, Washington, D. C. 20380, by using the self-addressed Standardization Document Improvement Proposal (DD Form 1426) appearing at the end of this document or by letter.

Downloaded from http://www.everyspec.com

L-P-375 - Plastic Film, Flexible, Vinyl Chloride
L-P-390 - Plastic, Molding and Extrusion Material, Polyethylene and and Copolymers (Low, Medium, and High Density)
V-T-276 - Thread, Cotton
V-T-295 - Thread, Nylon
PPP-P-636 - Boxes Shipping Fiberboard
DDD-L-20 - Label; For Clothing, Equipage and Tentage (General Use)

MILITARY

MIL-B-3461 - Buttons, Insignia, Metal, Uniform and Cap
MIL-E-17568 - Embroidery Materials, Metallic and Synthetic Metallic
MIL-C-18186 - Crowns: Service Cap
MIL-L-20271 - Lace, Gold, Ornamental

MIL-C-23315 - Crown, Service Cap: Tropical Worsted
MIL-C-41820 - Cloth, Gabardine; Polyester and Rayon
MIL-T-43548 - Thread, Polyester Cotton-Covered and Rayon Covered
MIL-S-43993 - Sweatband, Headwear, Artificial Leather
MIL-C-82252 - Cloth, Broadcloth, Wool, and Wool-Synthetic (Moth-Proofed)

STANDARDS

FEDERAL

FED-STD-151 - Metal Test Methods
FED-STD-191 - Textile Test Methods
FED-STD-311 - Leather, Methods of Sampling and Testing
FED-STD-751 - Stitches, Seams and Stitchings

MILITARY

MIL-STD-105 - Sampling Procedures and Tables for Inspection by Attributes
MIL-STD-129 - Marking for Shipment and Storage

(Copies of specifications and standards required by contractors in connection with specific procurement functions should be obtained from the procuring activity or as directed by the contracting officer).

2.1.2 Other Government documents, drawings, and publications. The following Government documents, drawings, and publications form a part of this specification to the extent specified herein.

LAWS AND REGULATIONS

U. S. Postal Service Manual

(Copies of the manual may be obtained from the Superintendent of Documents, U. S. Government Printing Office, Washington, D. C. 20402.)

2.1.3 Order of precedence. In the event of a conflict between the text of this specification and the references cited herein, the text of this specification shall take precedence.

Downloaded from http://www.everyspec.com

2.2. Other publications. The following document (s) form a part of this specification to the extent specified herein. The issues of the documents which are indicated as DOD adopted shall be the issue listed in the current DODISS and the supplement thereto, if applicable.

NATIONAL MOTOR FREIGHT TRAFFIC ASSOCIATION, INC., AGENT

National Motor Freight Classification

(Application for copies should be addressed to American Trucking Association, ATTN: Tariff Order Section, 1616 P Street, N. W., Washington, D. C. 20026.)

UNIFORM CLASSIFICATION COMMITTEE, AGENT

Uniform Freight Classification Rules

(Application for copies should be addressed to the Uniform Classification Committee, Room 1106, 222 South Riverside Plaza, Chicago, Illinois 60606.)

3. REQUIREMENTS

3.1 Standard sample. Standard samples are furnished solely for guidance and information to the contractor (see 6.3). Variations from this specification may appear in the sample, in which case the specification shall govern.

3.2 First article. When specified (see 6.2), before production is commenced, the first article, consisting of the number of cap frames specified by the procuring activity (see 6.2) shall be submitted, or made available to the contracting officer or his authorized representative for inspection. The approval of the first article authorizes the commencement of production, but does not relieve the contractor of responsibility for compliance with all provisions of this specification. The first article shall be manufactured by the contractor in the same facilities to be used for the manufacture of the production items.

3.3 Materials.

3.3.1 Inner band. The inner band shall be of a high density (linear) polyethylene plastic material, in black shade, conforming to type III, class H, grades 1 or 2, of L-P-390, except that the low temperature brittleness, dielectric constant, dissipation factor, and thermal stress cracking resistance requirements shall not be applicable. The band material shall be extruded, stripped, slit, or cut 2-1/4 ± 1/16 inches in width, 0.050 ± 0.002 inch in thickness, and shall be perforated to match the sample (see 6.3). A margin of 3/8 inch at the top and bottom edges of the band material shall be unperforated. Testing shall be as specified in 4.6.

3.3.1.1 Stiffness. The perforated band shall have a stiffness (scale reading) between 11 and 27 inclusive when tested as specified in 4.6.1.

3.3.1.2 Bending. The perforated band shall show no evidence of cracks after the bending test specified in 4.6.2.

3.3.2 Headband outer covering. The headband outer covering shall be made from cloth, gabardine, polyester, and rayon, black shade, conforming to type I of MIL-C-41820. As an alternate, wool-synthetic broadcloth of a compatible weight in a black shade may be used.

Downloaded from http://www.everyspec.com

3.3.3 Headband reinforcement. The headband reinforcement shall be a high grade galvanized cloth covered spring steel wire band, one-sided, 1/16 inch wide.

3.3.4 Sweatband. The sweatband shall conform to MIL-S-43993 except it shall be dyed brown and shall be 1-7/8 ± 1/16 inch wide with a mock turned-over edge.

3.3.5 Sweatband seam reinforcement. The seam joining the ends of the sweatband shall be reinforced with a 5/8-to 3/4-inch wide strip of brown pyroxylin coated cotton fabric cut the width of the sweatband, or the plastic film cited in 3.3.6 may be used.

3.3.6 Plastic film welt. The plastic film for the sweatband welt shall be 0.010 inch in thickness, conforming to type I, class 2 of L-P-375. The color of the plastic film may be brown or black.

3.3.7 Visor. The visors shall be constructed from the following materials:

3.3.7.1 Type I. The type I visors shall consist of a top ply, bottom ply and reinforcement plumper paper, bonded together, with binding over the edge (see Figure 1).

3.3.7.1.1 Top ply. The top ply shall be smooth, high-gloss poromeric material, 0.045 ± 0.003 inches thick, 16.5 ± 1 ounce per square yard.

3.3.7.1.2 Bottom ply. The bottom ply shall be of reconstituted leather, in a black pebbled gloss finish and shall be 6.0 to 6.5 ounces thick.

3.3.7.1.3 Plumper paper. The plumper paper for laminating to the top and bottom plies of the visor shall be 20 gage and treated so that it retains its original shape after being subjected to immersion test.

3.3.7.2 Type II. The type II visors shall consist of top ply of black broadcloth conforming to type I, class 4 of MIL-C-82252 and a bottom ply of reconstituted leather in a hatters green or black pin seal gloss finish. The top ply shall be embroidered with tarnish resistant synthetic gold yarn conforming to type III, class 8 of MIL-E-17568. The design of the embroidery shall be as shown in Figure 1.

3.3.8 Adhesive. The adhesive shall be suitable for use in cementing the component parts of the visor together. The adhesive shall be either natural or synthetic rubber cement.

3.3.9 Binding. The binding for visor edge shall be made from a plastic film, weighing not less than 12 ounces per square yard, and having a thickness of not less than 0.0013 inch. The plastic film shall have a smooth high finish, and the color shall match that of the top piece for the visor. The binding shall not crack and shall show no evidence of tackiness. The binding shall be tested as specified in Section 4, Table III.

3.3.10 Support stay and holder. The support stay and support holder shall be stamped from straight chromium stainless steel, commercially designated as type 430 stainless steel with material composition as shown below when tested as specified

Downloaded from http://www.everyspec.com

in section 4, Table III. The support, and support holder, shall conform in all respects to the design, dimensions and details shown on Figure 2 and as specified herein.

Composition:	Carbon	- 0.12% max. (ladle analysis (L.A.))
	Manganese	- 1.00% max. (L. A.)
	Silicon	- 1.00% max. (L. A.)
	Chromium	-14.00% min. 18.00% max (L. A.)
	Phosphorus	- 0.040% max. (L. A.)
	Sulphur	- 0.030% max. (L. A.)
	(Remainder iron and constituents)	

3.3.11 Buttons. The screwpost button shall be 27 line conforming to MIL-B-3461 as follows:

Cap	Button
Type I, Class 1 & Type II, Class 3	Type II, style 3, class B, subclass 1, black
Type I, Class 2 & Type II, Classes 1 & 2	Type II, style 3, class A, subclass 1, gold,

The button screw tube shall be 1/4 inch in length.

3.3.11.1 Washers. The tinnerman lock washers for securing the screw tube to the frame shall be of spring steel with internal locking flanges to grip the screw tube. As an alternate, heavy duty wire staples may be used to secure the screw tubes.

3.3.12 Grommet. The grommet wire shall be high grade spring steel, 5/16 inch wide, 0.020 ± 0.002 inch thick; with a white pyroxylin coating not less than 0.003 inch thick. The grommet wire shall be cut as follows: 32-1/4 inches long for sizes 6-3/8, 6-1/2, 6-5/8, 6-3/4; 33-3/4 inches long for sizes 6-7/8, 7, 7-1/8, 7-1/4, and 35-1/2 inches long for sizes 7-3/8, 7-1/2, 7-5/8, and 7-3/4. See Figure 3 for assembled view.

3.3.12.1 Clamp. The adjustment clamp clinched to one end of the steel grommet wire shall be made of the following materials:

Base and clamp	- Carbon steel AISI 1020, hardness Rockwell B scale 66, thickness 0.031 (± 0.002) inch.
Slug	- Carbon steel AISI 1015/1020, hardness Rockwell B scale 90, thickness 0.015 ± 0.002) inch.
Assembled clamp	- Electroplated with zinc 0.00005 inch minimum thickness, chrome plated finish.

The clamp assembly shall be approximately 1 inch long and its design shall conform to Figure 4. The width of the base component shall be sufficient to accommodate the width of the grommet wire. Testing shall be performed as specified in Table III, Section 4.

Downloaded from http://www.everyspec.com

3.3.13 Rivets. The rivets for securing the grommet to the support stay shall be nickel brass, with 3/32 inch minimum diameter head, when tested as specified in section 4, Table III. The length of the rivets shall be sufficient to provide a roll over edge of 0.045 inch to 0.050 inch.

3.3.14 Staples. The staples shall be stamped from a heavy duty flat steel wire 0.0250 ± 0.0005 inch in thickness, and shall be of sufficient length to thoroughly secure the applicable component parts and leave a smooth flat clinch without any distortion of the materials. The staples shall be corrosion resistant finish, and shall show no evidence of corrosion when tested as specified in 4.5.1.

3.3.15 Crown protector. Each cap frame shall be furnished with a crown protector for the cap cover. The crown protector shall be made of clear, colorless acetate sheeting 0.008 ± 0.001 inch thick and shall be oval shaped, measuring 10 inches by 9 1/2 inches ± 1/8 inch.

3.3.16 Thread.

3.3.16.1 Thread, cotton. The cotton thread for seaming and stitching the cap frame shall conform to type IC1, 3-ply, ticket No. A; type IC2, 3-ply, ticket Nos. A and 00; and type IB3, 4-ply, ticket No. 24, of V-T-276. The color of the thread shall be vat dyed black AA. The dyed thread shall show good colorfastness to laundering, perspiration, wet-dry cleaning, and light. Thread, polyester, cotton-covered, size 50, conforming to MIL-T-43548 may be used.

3.3.16.2 Thread, nylon. The nylon thread for seaming and stitching the cap frame shall conform to type IV, size C, 2-ply, of V-T-295. The color of the thread shall be vat dyed black AA. The dyed thread shall show good colorfastness to wet-dry cleaning and perspiration.

3.3.16.3 Tarnish-resistant. The thread for embroidering the visors on the type II caps shall be tarnish resistant synthetic gold yarn conforming to type III, class 8 of MIL-E-17568.

3.3.17 Chin straps.

3.3.17.1 Black chin straps. The black chin straps for the type I, class 1 and type II, class 3 caps shall be made of a single ply of poromeric material specified in 3.3.7.1.1. The design shall be as shown in Figure 5 which gives dimensions and construction requirements.

3.3.17.2 Gold chin straps. The gold chin straps shall be gold lace conforming to class 1 of MIL-L-20271, 5/8 inch wide, constructed with tarnish resistant synthetic yarn conforming to type III, class 8 of MIL-E-17568. The gold lace shall be mounted on leather or other suitable material to provide body to the strap. The design shall be as shown in Figure 5 which gives dimensions and construction requirements.

Downloaded from http://www.everyspec.com

3.3.18 Labels. Each cap frame shall have a cloth combination identification-size label and a stamped or paper size label, conforming to the following:

3.3.18.1 Identification-size label. The combination identification-size label shall conform to type VI, class 4, of DDD-L-20, except that the label shall bear the following inscription:

NOMENCLATURE: FRAME, CAP, MAN'S
CONTRACT NO.: DLA-000-000-0000 (Example)
STOCK NO.: 8405-00-000-0000 (Example)
SIZE: 7 (Example)
NAME OF CONTRACTOR

The printing on the label shall show fastness to dry cleaning only.

3.3.18.2 Stamped or paper size label. The stamped size label shall conform to type IV, class 2, of DDD-L-20, except that only the size shall be designated and it shall show fastness to dry cleaning only. The label shall be of a pressure sensitive adhesive type, with the size only legibly printed with numerals not less than 5/16 inch in height with a black marking medium.

3.4 Design. The cap frame shall be the Marine Corps design shown in Figures 1 through 6, consisting of a circular inner headband, with crescent shaped, embroidered cloth or poromeric top visor centered at the front of the frame. The support, support holder, and adjustable steel wire grommet shall conform in all respects to the design, dimensions and details shown on the attached Figures 2 through 3 and as specified herein. Each cap frame shall have a chin strap attached to the cap with two insignia buttons inserted through lower sides of the headband into their respective screw tubes and securely attached. Each frame shall be supplied with a clear acetate crown protector (see 3.3.15).

3.5 Patterns. The patterns for cutting all parts of the cap frame shall be furnished by the contractor, and shall be of the proper proportions to provide good fitting cap frames conforming to the finished dimensions in Table II.

3.6 Construction.

3.6.1 Manufacturing requirements. The frames shall be manufactured in accordance with the operations and the stitch, seam and stitching types specified in Table I. The contractor is not required to follow the exact sequence of operations as listed in Table I but all operations specified shall be used to manufacture the cap frame.

3.6.1.1 Stitches, seams, and stitchings. The stitch, seam, and stitching types specified in Table I shall conform to FED-STD-751. Where stitch type 101 or 401 is used, the looper (under thread) shall be on the inside of the cap frame. The number of stitches per inch as specified in Table I, indicates the minimum number permitted.

3.6.1.2 Tacking and backstitching. Ends of seams and rows of stitching produced with 301 type stitch, when not caught in other seams or stitching, shall be securely backstitched not less than 1/4 inch. Thread breaks (all stitch types) shall be secured by stitching back of the break not less than 1/2 inch. When stitch type 401 is used, ends of seams and rows of stitching shall be caught in

Downloaded from http://www.everyspec.com

other seams or rows of stitching, and skipped stitches and thread breaks may be repaired using stitch type 301 backstitched not less than 1/2 inch on each side of skip or break.

3.6.1.3 Overedge stitching. Overedge stitching shall be done on serging machines with knife attachment properly set to trim the raveled edge without cutting the material.

TABLE 1 MANUFACTURING REQUIREMENTS

NO	OPERATION	STCH TYPE	SEAM/ STCH TYPE	STCH/ IN	NDL	BOB/ LPR
1.	Cutting. a. Cut the headband outer covering from the polyester and rayon material. The outer covering of the headband shall be cut, 3-3/4 ± 1/8 inches wide in the warp or filling direction, to the proper length to snugly fit around the headband and provide a 3/8-inch allowance for the back seam. b. Cut the headband from the high density plastic. The headband shall be 2-1/4 ± 1/8 inches wide and long enough to permit the ends of the band to be lapped 1 ± 1/4 inch. c. Cut the cloth covered wire band to form the headband reinforcement to the proper length, allowing 1 inch for overlap. d. Cut the plastic film welt for the sweatband 1 ± 1/8 inches wide and the full length of the sweatband. e. Cut the cotton coated fabric or plastic film for the sweatband seam reinforcement 5/8 to 3/4 inch wide and 1 1/2 ± 1/8 inches long. f. Cut the plastic binding for the visor edge 3/4 to 7/8 inches wide in an appropriate length to fully bind the outside edge of the visor. g. Cut the 3/8-inch-wide spring steel for the grommet to the length specified in 3.3.12. h. Cut the clear acetate crown protector as specified in 3.3.15. i. Cut the poromeric material for the type I visor top in accordance with requirements of Operation 3.d.					

Downloaded from http://www.everyspec.com

TABLE 1 MANUFACTURING REQUIREMENTS

NO	OPERATION	STCH TYPE	SEAM/ STCH TYPE	STCH/ IN	NDL	BOB/ LPR
1.	Cutting. (cont'd)					
	j. Cut the leather bottom ply for the visor in accordance with requirements of Operation 3.d.					
	k. Cut the cloth, broadcloth for the type II visor top in accordance with requirements of Operation 3.d.					
	l. Cut the visor reinforcement from plumper paper in accordance with requirements of Operation 3.d.					
2.	Replacement of damaged parts.					
	a. Replace, at time of cutting, any part containing damages such as holes or seriously weakening defects such as smashes, multiple floats, and slubs likely to develop into holes.					
3.	Make visor.					
	The finished visors shall be as shown in Figure 1.					
	a. The type I visor shall be constructed by laminating the top ply of poromeric material to the plumper paper and the bottom leather ply with the adhesive specified in 3.3.8.					
	b. The type II visor shall be constructed by laminating the top ply of wool broadcloth to the reinforcement piece of cloth cotton twill face side up with the adhesive specified in 3.3.8. To the wool broadcloth, stitch the required synthetic gold metallic applique (see 3.3.7.2 and Figure 1).	Hand-Embroidered				
	c. For type I and II visors, stitch the visor binding (see 3.3.9) around the outside edge 1/16 inch from the turned edge of binding on top of the visor and catching the other edge in	301	BSb-1	7-8	A/3	A/3

Downloaded from http://www.everyspec.com

TABLE 1 MANUFACTURING REQUIREMENTS

NO	OPERATION	STCH TYPE	SEAM/ STCH TYPE	STCH/ IN	NDL	BOB/ LPR
3.	Make visor. (cont'd)					
	the stitching on the bottom of the visor. The binding shall finish on top of the visor 3/16 to 1/4 inch wide.					
	d. The finished visor for type I and II cap frames shall be properly molded with heat into a uniform crescent shape, and shall be of one size only with dimensions as follows:					
	1. Overall width of visor, before assembly, at center, 2-5/8 ± 1/8 inches.					
	2. Depth of arc, at center of back-edge, 2-7/8 ± 1/8 inches.					
	3. Width of visor, after assembly, at center from front edge to lower edge of band, 2-1/4 ± 1/8 inches.					
	4. Distance from left tip to right tip of visor before assembly, when spread flat shall be 8 ± 1/8 inches.					
	5. Distance from left tip to right tip after assembly, at lower edge of headband, shall be 11 ± 1/4 inches.					
4.	Make poromeric chin strap.					
	Finished appearance. Chin straps shall be made in two sections with a hole at one end and a loop at the other end of each section. The two sections shall be identical except for the manner of attaching the loops. All edges shall be stained black. The top and bottom edges of the strap and the point of the loop shall have an embossed line. The loops shall be positioned with the point in the center of the strap and the back edge of loop parallel to the square end of strap (see Figure 5).					

Downloaded from http://www.everyspec.com

TABLE 1 MANUFACTURING REQUIREMENTS

NO	OPERATION	STCH TYPE	SEAM/ STCH TYPE	STCH/ IN	NDL	BOB/ LPR
4.	Make poromeric chin strap. (cont'd)					
	a. The chin strap shall be made of one piece for each strap, and one piece for each loop.					
	b. Position the loop for the top section on the outside of the strap, and stitch loop to strap 1/16 inch from the right and left edges. Continue stitching out to the ends of the loops (see Figure 5).	301	SSa-2	8-10	A/3	A/3
	c. Lap the ends of the loop 1/4 ± 1/16 inch on the underside of the strap and fasten the lapped end with two staples through the ends of the loop only.					
	d. Stitch the loop for the bottom section 1/16 inch from each edge from end to end.	301	SSa-2	8-10	A/3	A/3
	e. Position the loop on the bottom section and lap the ends of the loop 1/4 ± 1/16 inch on the underside of the strap. Fasten the lapped ends of the loop and the strap only.					
	f. Punch a 3/16-inch-diameter hole, centered in the strap, 3/8 ± 1/32 inch from the rounded end of each strap.					
	g. Assemble the straps through the loops.					
5.	Make gold chin straps.					
	Finished appearance. Chin straps shall be made in two sections with an eyelet at one end and a loop at the other end of each section. The upper section shall consist of a strap and loop and the lower section shall consist of a strap, loop, and pointed tab for sewing to the loop. The loops shall be positioned perpendicular to the straps (see Figure 5).					

Downloaded from http://www.everyspec.com

TABLE 1 MANUFACTURING REQUIREMENTS

NO	OPERATION	STCH TYPE	SEAM/ STCH TYPE	STCH/ IN	NDL	BOB/ LPR
5.	Make gold chin straps. (cont'd)					
	a. Cut two pieces of strap material 2-1/4 ± 1/8 inches long for making the loops. Cut the upper strap 10-1/4 ± 1/4 inches long with pointed ends. Cut the lower strap 9 ± 1/4 inches long with one pointed end and one square cut end.					
	b. Position one loop over the upper strap with outside edge 5/8 inch from the pointed end and stitch the loop to the strap.	301	SSa-1	6-10	A	A
	c. Fold to form the loop around the strap, turning under the outer end and stitch to complete the loop.	Hand		4-6		
	d. Position the second loop over the lower strap end 5/8 inch from the pointed end and stitch the outside edge.	301	SSa-1	6-10	A	A
	e. Fold to form the loop around the square end of the lower strap, turning under the outer end. Stitch through ends of loop and strap. The finished length from pointed end to pointed end to be 10-1/4 ± 1/4 inch.	Hand		4-6		
	f. Insert a 3/16-inch inside diameter eyelet through the ends of each strap, opposite the loop end, with the center of the eyelet finishing 3/8 ± 1/32 inch from the pointed end.					
	g. Assemble the straps through the loops.					
6.	Make inner headband.					
	a. Lap the ends of headband 1 ± 1/4 inch and fasten together with not less than two staples.					

Downloaded from http://www.everyspec.com

TABLE 1 MANUFACTURING REQUIREMENTS

NO	OPERATION	STCH TYPE	SEAM/ STCH TYPE	STCH/ IN	NDL	BOB/ LPR
7.	Attach headband reinforcement.					
	a. Place headband reinforcement inside inner headband with top edges even and join together with stitching through center of reinforcement band with lapped ends of band finishing at either side of the cap.	301	SSa-1	6-10	A/3	A/3
8.	Make headband outer cover.					
	a. Fold the polyester and rayon cloth strip lengthwise and stitch 1/16 inch from fold, forming a welt 2 ± 1/16 inches from top edge of finished cover.	301	OSf-1	10-14	A/3	A/3
	b. Serge stitch top and bottom edge of cover.	503 or 504	EFd-1	8-12	A/3	A/3
	c. Join ends of strip with a 3/8-inch seam.	301	SSa-1	10-14	A/3	A/3
	d. Open seam and press smooth and flat.					
9.	Make sweatband assembly.					
	a. Fold plastic welt strip in half lengthwise. Position edge of sweatband to extend 1/16 to 1/8 inch from turned edge of strip and stitch together with one row of zig-zag stitching.	304	FSb-1	10-14	A	A
	b. Butt ends of sweatband assembly together and reinforce with cotton strip or plastic film at joining seam. Attach the size label on the outside of the sweatband.	304	FSe-1	10-14	A	A
10.	Assemble headband with label.					
	Finished appearance. The lapped ends of the inner headband shall be to the right or left of the center back seam of the headband cover. The headband					

Downloaded from http://www.everyspec.com

TABLE 1 MANUFACTURING REQUIREMENTS

NO	OPERATION	STCH TYPE	SEAM/ STCH TYPE	STCH/ IN	NDL	BOB/ LPR
10.	Assemble headband with label. (cont'd)					
	cover shall fit snugly on the inner headband; shall have a smooth, flat appearance throughout, without puckers, wrinkles, or any other type of distortion; shall fit smoothly and tightly over the inner headband; the back seam shall be vertically straight at center back of frame; and the welt shall be uniformly parallel with and 3/16 ± 1/16 inch from bottom edge of headband.					
	a. Set headband reinforcement wire and fold headband outer cover to inside of inner headband and stitch top edge of cover to inner headband 1/2 ± 1/8 inch from top edge, enclosing the wire band.	301		6-10	A/3	A/3
	b. Form headband cover on inner headband. Fold cover over bottom edge of inner headband and stitch with a single row of stitches along the welt, at the back, catching the lower end of the combination label and the turned under portion of the cover on inside of headband in the stitching. The stitching may be above or below the welt, but shall be stitched as close as possible to the welt so as to be practically invisible on the outside of the frame. The label shall be positioned at the center rear of the headband.	301		6-10	A/3	A/3
11.	Assemble support stay.					
	a. The support stay shall be assembled by securely riveting the middle of the grommet wire to the top end of the stay. Two rivets, 5/8 inch apart, center to center, shall be inserted from the front through the center of the wire. The adjustment clamp shall be securely clinched at one end of the grommet wire.					

Downloaded from http://www.everyspec.com

TABLE 1 MANUFACTURING REQUIREMENTS

NO	OPERATION	STCH TYPE	SEAM/ STCH TYPE	STCH/ IN	NDL	BOB/ LPR
12.	Assemble frame.					
	a. Position the headband on the top of the visor hinge with the welt to the inside and the visor notch in line with the center front of the headband. Join the visor to the inside of inner band with a 1/4 ± 1/16 inch seam from the skived edge of visor and 1/4 ± 1/16 inch from the bottom edge of inner band.	301	LSa-1	6-10	A	A
	b. Stitch the finished sweatband to inner edge of welt strip with the ends of the sweatband at center back and the stitching through the plastic welt strip and adjacent to the edge of the sweatband. The visor shall be flanged outward and set so that the stitching does not touch the forehead. The sweatband shall not be visible at the lower edge of the headband.	304 or 502	EFd-1	6-10	C (nylon)	
	c. The crown support stay holder shall be vertically straight, flush, and secure against the headband, and the stay shall be readily engaged and disengaged in both slots of holder. The vertical center line of holder shall be not more than 1/4 inch from the point directly opposite the back seam. Center the crown support stay holder on inside of center front of headband with top edge of holder 1/16 to 1/8 inch below top edge of headband, and with all four prongs forced through all plies of material to outside of frame as far as possible. The prongs shall be flattened against the headband with the points embedded in the cloth headband outer covering material to securely attach the holder to the frame. The upper prongs shall be bent downward and the lower prongs bent upward. (see Figure 2).					

Downloaded from http://www.everyspec.com

TABLE 1 MANUFACTURING REQUIREMENTS

NO	OPERATION	STCH TYPE	SEAM/ STCH TYPE	STCH/ IN	NDL	BOB/ LPR
12.	Assemble frame. (cont'd)					
	d. Punch a hole through left and right sides of the headband for button screw tubes. The holes shall be positioned so that the center of the screw tube on both sides of the finished frame shall be 5-3/4 ± 1/8 inches from vertical center line of stay holder and 5/8 ± 1/16 inch from lower edge of headband.					
	e. Insert a button screw tube through the button tube hole and secure to the inner headband with a tinnerman lock washer.					
	or					
	As an alternate method, the screw tubes may be secured to the cap with a minimum of one heavy duty staple.					
	f. Insert support stay securely in the support holder. The finished height from the visor to the top center of the support stay shall be 4-1/4 ± 1/8 inches.					
	g. Assemble the completed top and bottom sections of the chin straps to engage on the button screw tubes and snugly fit the headband. Screw the buttons into the tubes the entire length of the screw.					
13.	Clean frame					
	a. Trim all ends of stitchings and remove all loose threads from frame. Remove all spots and stains from the frame without injury to the material.					

Downloaded from http://www.everyspec.com

3.7 Finished measurements. Each frame shall be properly sized, and marked accordingly. The finished frame shall be checked for size by taking the head measurement with Gage No. 201. The head measurement shall be the inside circumference of the headband at the lower edge of sweatband. The head measurement of each size frame shall be as specified in Table II.

Table II - Head measurements

Size of frame	Head measurements 1/ (inches)
6-3/8	20-1/8
6-1/2	20-1/2
6-5/8	20-7/8
6-3/4	21-1/4
6-7/8	21-5/8
7	22
7-1/8	22-3/8
7-1/4	22-3/4
7-3/8	23-1/8
7-1/2	23-1/2
7-5/8	23-7/8
7-3/4	24-1/4

1/ All head measurements ± 1/8 inch.

3.8 Workmanship. The finished frame shall conform to the quality and grade of product established by this specification. The occurrence of defects shall not exceed the levels set by the applicable acceptable quality levels (AQL's).

4. QUALITY ASSURANCE PROVISIONS

4.1 Responsibility for inspection. Unless otherwise specified in the contract or purchase order, the contractor is responsible for the performance of all inspection requirements as specified herein. Except as otherwise specified in the contract or order, the contractor may use his own or any other facilities suitable for the performance of the inspection requirements specified herein, unless disapproved by the Government. The Government reserves the right to perform any of the inspections set forth in the specification where such inspections are deemed necessary to assure supplies and services conform to prescribed requirements.

4.1.1 Certificate of compliance. Where certificates of compliance are submitted, the Government reserves the right to check test such items to determine the validity of the certification.

4.2 Classification of inspection. The inspection requirements specified herein are classified as follows:

1. First article inspection (see 4.4).
2. Quality conformance inspection (see 4.5).

4.3 Inspection conditions. Unless otherwise specified herein, all inspections shall be performed in accordance with the test conditions specified in MIL-STD-105.

Downloaded from http://www.everyspec.com

4.4 First article inspections. When first article is required, inspection shall be made of a completely fabricated cap for all provisions of this specification.

4.5 Quality conformance inspection.

4.5.1 Testing of components. In accordance with 4.1 above, components and materials shall be tested in accordance with all the requirements of referenced specifications, figures and standards unless otherwise excluded, amended, modified or qualified in this specification or applicable purchase document. In addition to testing provisions contained in subsidiary specifications, figures and standards, testing shall be performed on components listed in Table III for characteristics noted. All test reports shall contain individual values utilized in expressing the final results. Whenever applicable, tests shall be conducted in accordance with FED-STD-191.

4.5.1.1 Sampling for testing. Unless otherwise specified in subsidiary specifications, sampling shall be in accordance with the following. The lot shall be unacceptable if one or more sample units fail to meet any test requirement specified herein.

Lot size (lot unit)	Sample size (sample unit)
800 or less	2
801 through 22,000	3
22,001 and over	5

The unit for expressing lot size and sample unit for testing each component shall be in accordance with the applicable subsidiary specification and as follows:

Component	Lot size expressed as	Sample unit for testing
Inner headband	feet	1 yard strip
Headband reinforcement wire	feet	1 yard length
Sweatband seam reinforcement	yard	1 foot length
Binding	10 yards	1 square foot
Rivets	Gross	3 each
Staples	Gross	10 each
Grommet	10 complete units	1 unit
Clamp	Gross	10 each
Crown Support and holder	100 complete units	1 complete unit
Button, button screw tube	Gross	10 complete units

4.5.1.2 Certification of compliance. Components and materials listed below may be accepted on the basis of a contractor's certification of compliance for requirements indicated:

Component	Characteristic	Rqmt. Para.
Inner headband	Material identification	3.3.1
Headband outer cover and sweatband welt	Material identification	3.3.2
Headband, wire	Material identification	3.3.3
Sweatband	Material identification	3.3.4

Downloaded from http://www.everyspec.com

Component	Characteristic	Rqmt. Para.
Sweatband seam reinforcement	Material identification	3.3.5
Visor, top piece Type I	Material identification	3.3.7.1.1
Visor, bottom piece	Material identification	3.3.7.1.2
Visor, top piece Type II	Material identification	3.3.7.2
Plumber paper	Material identification	3.3.7.1.3
Adhesive	Material identification	3.3.8
Binding	Material identification	3.3.9
Chin strap	Material identification	3.3.17
Rivets	Material identification	3.3.13
Staples	Material identification	3.3.14

Downloaded from http://www.everyspec.com

Table III - Test Methods

Component	Characteristic	Rqmt. para.	Test method	No. determinations per sample unit		Results reported as
Inner band	Thickness	3.3.1	Micrometer		2	To nearest 0.001 in.
	Width	3.3.1	Gage		1	Pass or fail
	Stiffness	3.3.1.1	4.6.1		1	Pass or fail
	Bending	3.3.1.2	4.6.2		1	Pass or fail
Headband reinforcement (wire)	Thickness	3.3.3	Gage		1	To nearest 0.001 in.
	Width	3.3.3	Visual		1	Pass or fail
Binding	Weight	3.3.9	Scale		2	To nearest oz/yd.
	Thickness	3.3.9	Gage		2	To nearest 0.0001 in.
	Finish	3.3.9	Visual		1	Pass or fail
	Color	3.3.9	Visual		1	Pass or fail
Staples	Thickness	3.3.14	Gage		2	To nearest 0.001 in.
Grommet wire pyroxylin coating (10 pounds)	Material identification of pyroxylin	3.3.12	Std Comml	1	X	Pass or fail
	Thickness of wire	3.3.12	Std Comml	2	X	Avg of 2 det per sample unit to nearest 0.001 inch.
	Thickness of pyroxylin	3.3.12	Std Comml	3	X	Ave of 3 det. per sample unit to nearest 0.001 inch.
Spring steel	Material identification 1/	3.3.12	Std Comml	-	-	Pass or fail
	Temper 1/	3.3.12	Std Comml	-	-	Pass or fail
Support stay and holder (50 pounds)	Type 430 Stainless steel	3.3.10	Method III, FED-STD-151	2 Composite	X	To nearest 0.01% of each element.

Table III - Test Methods

Component	Characteristic	Rqmt. para.	Test method	No. determinations per sample unit		Results reported as
Rivets	Material Identification and plating	3.3.13	Std Comml	1	X	Pass or fail

1/Certificate of compliance will suffice.

Downloaded from http://www.everyspec.com

Source: https://assist.dla.mil -- Downloaded: 2016-05-14T13:40Z
Check the source to verify that this is the current version before use.

Downloaded from http://www.everyspec.com

4.5.2 In-process inspection. Inspection shall be performed during the manufacturing of the end item to ascertain that the operations are performed as specified herein. The Government reserves the right to determine the acceptability of construction methods not performed in accordance with specified requirements for operations or subassemblies.

4.5.3 Examination of end item. The defects found during examination of the end item shall be classified in accordance with 4.5.3.1, 4.5.3.2, and 4.5.3.3. The sample unit shall be one cap frame. All defects shall be as indicated below except those with an asterisk (*) in classification column which shall be classified as follows:

Major defect - When seriously affecting appearance or serviceability

Minor A defect - When affecting appearance or serviceability, but not seriously.

4.5.3.1 General defects. General defects shall be classified as follows:

EXAMINE	DEFECT	CLASSIFICATION		
		MAJOR	MINOR	
			A	B
Material defects and workmanship	a. Headband covering, sweatband welt.			
	1. Any hole or weakening defect, such as smash, multiple float, or loose slub that may develop into a hole.	X		
	2. Tears, mend, burn, cut, needle chew, etc.	X		
	3. Shade bar or unsightly slub:			
	- on outside.		*	
	- on inside.			X
NOTE: Material defects are to be classified as indicated only when the condition is one which definitely weakens the fabric or when it is so conspicuously located as to be clearly noticeable. Material defects which are inconspicuous and do not weaken the fabric shall not be classified as defects.				
Cleanness	a. Any spot or stain clearly noticeable:			
	- on outside	X		
	- on inside			X
	b. Thread ends not trimmed, or loose thread ends not removed (to be scored only when the condition exists on major portion of frame).			X
Components and assembly	a. Any component or required operation omitted.	X		
	b. Any component not as specified.	X		

Downloaded from http://www.everyspec.com

EXAMINE	DEFECT	CLASSIFICATION		
		MAJOR	MINOR	
			A	B
Cutting	Any component part not cut in accordance with specification requirements or not in accordance with directional lines indicated on patterns.	X		
Seams and stitching	a. Accuracy of seaming:			
	1. Seams twisted, puckered, or pleated, affecting appearance.		X	
	2. End of stitching (when not caught in other seam or stitching) backstitched less than 1/4 inch.			X
	3. Stitching of thread breaks overlapping less than 1/2 inch at each end of break.		X	
	4. Any component part caught in an unrelated operation or stitching.	X		
	5. Wrong color thread.		X	
	b. Gage of stitching;			
	1. Unevenly gaged, affecting appearance (to be scored only when the condition exists on major portion of seam):			
	- on visor.	X		
	- on all other components.		X	
	2. Edge or raised stitching sewn too close to edge, resulting in damage to component.	X		
	3. Beyond range of width specified or varies more than 1/16 inch when no range is specified.			X
	c. Open Seams:			
	1. Any seam open on visor joining seam, visor binding, sweatband			

Downloaded from http://www.everyspec.com

EXAMINE	DEFECT	CLASSIFICATION		
		MAJOR	MINOR	
			A	B
	joining to frame, back seam of sweatband or back seam of cloth band.			
	- less than 1/4 inch.		X	
	- more than 1/4 inch.	X		
	2. On all other seams:			
	- less than 1/4 inch.			X
	- 1/4 inch but not more than 1/2 inch.		X	
	- more than 1/2 inch.	X		
NOTE: A seam shall be classified as open when one or more stitches joining a seam are broken or when two or more continuous skipped or run-off stitches occur.				
	d. Raw edges.			
	Any raw edge on binding on upper edge of visor or on cloth at bottom edge of cap frame.	X		
NOTE: Raw edges not securely caught in the stitching shall be classified as an open seam.				
	e. Run-offs:			
	1. On joining seam - when resulting in an open seam, use "Open seam" classification.		X	
	2. Edge or raised stitching (when not resulting in an open seam:			
	- 1/4 inch up to 1/2 inch inclusive.			X
	- more than 1/2 inch.		X	
	f. Seam and stitch types. Not specified seam or stitch type.	X		
	g. Stitch tension:			
	1. Loose tension resulting in a loose seam or exposed loose top or bottom thread:			
	- on visor joining seam or on stitching of visor binding.	X		
	- on all other seams or stitchings.		X	

Downloaded from http://www.everyspec.com

EXAMINE	DEFECT	CLASSIFICATION		
		MAJOR	MINOR	
			A	B
	2. Tight tension (stitches break when normal strain is applied to the lengthwise direction of seam or stitching).	X		
NOTE: Puckering is evidence of tight tension. When puckering is evident, seam shall be tested by exerting pull in lengthwise direction of seam or stitching.				
	h. Stitches per inch (to be scored only when the condition exists on major portion of seam).			
	1. Less than minimum specified except on hand felling of sweatband:			
	- 1 stitch.			X
	- 2 stitches.		X	
	- 3 or more stitches.	X		
	2. Less than minimum specified on hand felling sweatband:			
	- 1 stitch.			X
	- 2 or more stitches.		X	
	- 3 more than miximum specified.	X		
Marking	Combined identification and size label missing, incorrect, illegible.		X	
4.5.3.2 Detailed defects. Detailed defects applicable to specific parts of the frame shall be classified as follows:				
Visor	a. Not securely or evenly stitched with sweatband welt to inner headband.	X		
	b. Set from vertical front of cap at an angle of more than 35 degrees or less than 30 degrees.			X
	c. Center of visor offset from center of crown support by more than: -			
	- 3/8 inch	X		
	- 1/4 to 3/8 inch		X	
	- 1/8 to 1/4 inch			X

Downloaded from http://www.everyspec.com

EXAMINE	DEFECT	CLASSIFICATION		
		MAJOR	MINOR	
			A	B
	d. Skiving omitted on inside edge.		X	
	e. Front edge uneven or not molded to proper shape.	X		
	f. Binding not securely caught to edge of visor.	X		
	g. Binding not firmly and smoothly joined to visor edge, affecting appearance.	X		
	h. Binding is peeling, cracked, tacky, spotted, discolored or blistered.	X		
	i. Finished width of binding on top of visor under 3/16 inch or over 1/4 inch (but of uniform width).	X		
	j. Binding not of uniform width on top of visor, affecting appearance.	X		
	k. Width of visor at center less than 2-3/16 inches or more than 2-5/16 inches.			X
	l. Distance between ends of attached visor at headband less than 10 3/4 or more than 11-1/4 inches.	X		
	m. Poorly laminated, affecting appearance.	X		
Embroidery (Type II)	a. Omitted.	X		
	b. Not specified type.	X		
	c. Core yarn not fully covered with metallic ribbon.		X	
	d. Loose stitches.		X	
Chin straps and loops	a. Length of each section under 10 inches or over 10-1/2 inches.		X	
	b. Width of each section under 9/16 inch or over 11/16 inch.		X	
	c. Edges of straps or points or loop not embossed. (Type I, class 1 or Type II, class 3).	X		
	d. Edges not stained or poorly stained.			X

Downloaded from http://www.everyspec.com

EXAMINE	DEFECT	CLASSIFICATION		
		MAJOR	MINOR	
			A	B
	e. Loop not securely stitched to top strap or not stapled with two staples.	X		
	f. Bottom section of loop not securely stapled to bottom strap or not stapled with two staples.	X		
	g. Length of loops under 1-1/8 inch or over 1-3/8 inch.		X	
	h. Center of hole under 11/32 inch or over 13/32 inch from end of strap.			X
	i. Size of eyelet opening or punched hole under 5/32 inch or over 1/4 inch.			X
	j. Holes off center of strap over 1/32 inch.			X
	k. Opening of loop narrow, curling edge of strap.	X		
Buttons and screw tubes	a. Center of tube under 9/16 inch or over 11/16 inch from lower edge of headband.			X
	b. Distance of screw tubes from center of crown support less than 5-5/8 inches or more than 5-7/8 inches (to be measured with Gage No. 406).	X		
	c. Any button or screw tube omitted.	X		
	d. Tube(s) not securely locked.			X
	e. Button or screw tubes defective, affecting function.	X		
Headband, outer covering	a. Welt omitted.	X		
	b. Back seam not spread open or partially lapped over.		X	
	c. Back seam offset from center back of frame by more than 1/4 inch.		X	
	d. Back seam not in vertical position by more than 1/8 inch.			X
	e. Outer band badly puckered, pleated, or twisted, affecting appearance.		X	

Downloaded from http://www.everyspec.com

EXAMINE	DEFECT	CLASSIFICATION		
		MAJOR	MINOR	
			A	B
	f. Outer band irregular in width by 1/8 inch or over (to be scored only when condition exists on major portion of band).		X	
Innerband	a. Overlap not positioned either to the right or left of center back.			X
	b. Width under 2-3/16 inches or over 2-5/16 inches.			X
	c. Ends overlapped under 3/4 inch or over 1-1/4 inches.			X
Innerband reinforcement wire	a. Omitted or positioned on outside of innerband.	X		
	b. Wire not positioned at top edge of inner headband.	X		
Grommet (with clamp)	a. Not fabricated of pyroxylin coated spring steel.	X		
	b. When wire depressed together into figure 8 position, and released, it does not spring back to its original circular shape.	X		
	c. Coating is not smooth and adherent, e.g., contains beads, blisters, lumps, specks, pits or foreign matter.	*		
	d. Coating is missing, scratched, scuffed, abraded or otherwise damaged, in area of:			
	—1/16 inch or more in width or 1 inch or more in length.	X		
	— More than 1/32 inch, but less than 1/16 inch in width or more than 1/2 inch, but less than 1 inch in length.			X
	—1/32 inch or less in width or 1/2 inch or less in length.			X

Downloaded from http://www.everyspec.com

EXAMINE	DEFECT	CLASSIFICATION		
		MAJOR	MINOR	
			A	B
	e. Not clean.			X
	f. Length 1/2 inch more or less than required for size of cap.	X		
	g. Clamp hinge not on inside of grommet wire.	X		
	h. Clamp not securely clinched to wire.			X
	i. Clamp does not function properly.			X
	j. Rough or sharp edges on wire or clamp.			X
Support stay and holder:				
Finish	a. Dirty, i.e., surface contains grease, mill soil, or other foreign matter.	X		
Design	a. Any operation not in accordance with specified requirements.		*	
Material	a. Not corrosion-resisting steel.	X		
Construction and workmanship	a. Component missing, cracked, fractured, bent out of shape, distorted, malformed, deformed, or otherwise impaired.		*	
	b. Any operation omitted or not properly performed, e.g., stake in support holder not formed at 90° angle.		*	
Assembly	a. Not connected or joined as specified or poorly accomplished, e.g., crown support attached to wrong side of the stay.		*	
	b. Sharp edge, burr or sliver that may injure personnel or damage fabric.	X		

Downloaded from http://www.everyspec.com

EXAMINE	DEFECT	CLASSIFICATION		
		MAJOR	MINOR	
			A	B
	c. Rivet missing, wrong type or size, or is not peened, i.e., can be removed by hand.	X		
	d. Rivet reversed, i.e., head of rivet is not on side of component specified.	X		
	e. Rivet head broken off.	X		
	f. Clinch of rivet incomplete, insufficient or set improperly, i.e., loose/can be rotated by hand or tool.	X		
	g. Flexing of crown wire causes rivet to loosen or wire to separate.	X		
	h. Rivet insufficiently peened but it cannot be removed by hand.			X
	i. Setting of rivet is poorly accomplished, resulting in sharp, rough edges.		*	
	j. Rivets are not placed equidistant from edges of the stay (± 1/32 inch).		*	
	k. Rivets are not 5/8 inch (± 1/32 inch) apart, center to center.		*	
	l. Stay and support holder will not mate, or a loose fit is effected.		*	
	m. Assembled height less than 4 1/8 inch or more than 4 3/8 inch.		*	
Sweatband	a. Edges of back seam out of alignment with outer covering seam by 1/4 inch or more.	X		
	b. Strip on underside of back seam omitted or not securely stitched.		X	
	c. Strip not trimmed even with top edge of sweatband.			X

Downloaded from http://www.everyspec.com

EXAMINE	DEFECT	CLASSIFICATION		
		MAJOR	MINOR	
			A	B
	d. Poorly felled to outer band and welt, i.e., stitching very irregular in appearance.		X	
	e. Ends not abutted properly.		X	
	f. Felling stitches exposed on outside of frame.		X	
	g. Twisted or puckered, affecting wearing comfort.	X		
	h. More than 1/8 inch above bottom edge of frame.		X	
	i. Width:			
	- under 1-13/16 inches.			X
	- over 1-15/16 inches.			X
Labels	a. Combination identification and size label:			
	1. Omitted, incorrect, or illegible.	X		
	2. Misplaced.		X	
	3. Not securely caught in stitching, or stitching through the printing.			X

Downloaded from http://www.everyspec.com

4.5.3.3 Finished measurements. Any head measurement deviating from the nominal dimensions and tolerance specified in Table II shall be classified as a size measurement defect.

4.5.3.4 Inspection levels and AQL's. Inspection levels and AQL's expressed in defects per 100 units (DHU) shall be as follows:

4.5.3.1 and 4.5.3.2

Inspection Level III of MIL-STD-105

AQL's	Major	1.5 DHU
	Major and Minor A (combined)	6.5 DHU
	Total Major, Minor A and Minor B (combined)	15.0 DHU

4.5.3.3

Inspection Level S-3 of MIL-STD-105

One class	4.0 DHU

4.5.4 Examination of packaging. An examination shall be made to determine compliance with packaging, packing and marking requirements of Section 5 of this specification. Defects shall be scored in accordance with the list below. The sample unit shall be one shipping container fully packed, selected just prior to closing operation. Defects of closure listed below shall be examined on shipping containers fully prepared for delivery. The lot size shall be the number of shipping containers in the inspection lot. The inspection lot shall be S-2 and the AQL shall be 2.5 DHU.

Examine	Defect
Marking (exterior and interior)	Omitted; incorrect; illegible; or improper size, location, sequence or method of application.
Materials	Any component missing, any component damaged, affecting serviceability.
Workmanship	Inadequate application of components, such as: incomplete closure of case liners, container flaps, loose strapping, inadequate stapling. Bulging or distortion of containers.
Content	Number of cap frames per container is more or less than required. Size shown on one or more cap frames not as specified on container.

Downloaded from http://www.everyspec.com

4.6 Tests. The inner band shall be subjected to tests as follows.

4.6.1 Stiffness test. The band shall be tested for stiffness at room temperature according to FED-STD-311, method 4211, using a span length of 1.0 inch, a moment weight of 1.0 inch-pounds, and measuring the load at 20° on the angular deflection scale. The specimen shall be a rectangle perforated band, 1 inch wide, 4 inches long. It shall be cut from the center part of the band containing perforations and the cut edges may contain perforations.

4.6.2 Bending test. The test is run on five 4 inch long pieces of the perforated band. Each piece shall be bent across its width at least 180° around a metal test mandrel, a round metal bar measuring 1/8 inch diameter. The piece shall be pressed firmly against the mandrel and the bend made at the location of the perforations. Each piece shall be examined for cracks, both while bent and after removing from the test. The test shall be run at 0°F. The specimen shall be straightened to its original position after removal from the mandrel. All samples and the test mandrel shall be kept in a cold box at a temperature of 0° ± 3°F for not less than 4 hours before the test. The test shall be run in the cold box and the samples of mandrel handled only with heavy gloves so as to prevent warming of the samples during the test.

5. PACKAGING

5.1 Preservation and packaging. Preservation and packaging shall be level A or commercial as specified (see 6.2).

5.1.1 Level A. Each cap frame, with grommet, crown protector, and with chin strap and buttons assembled thereon shall be placed within an individual polyethylene bag, with the visor facing the bag opening. The bag shall be of sufficient length to allow closure by tying with a covered wire tape. The polyethylene film shall be 0.0015 inch thick.

5.1.2 Commercial. Commercial packaging shall afford adequate protection against deterioration and physical damage during shipment from the supply source to the first receiving activity. The contractor may use his standard practice provided it meets the requirements specified for commercial packing.

5.2 Packing. Packing shall be level A or commercial as specified (see 6.2).

5.2.1 Level A. Ten cap frames of one type, class, and size only, packaged as specified in 5.1, shall be packed in a fiberboard shipping container conforming to style RSC-L, grade V2s of PPP-B-636. Level A packages shall be placed one on top of each other with alternate visors reversed front to back, two in length, one in width, and five in depth within a shipping container. Inside dimensions of each shipping container shall approximate 23-1/2 inches in length, 15 inches in width, and 15 inches in depth. Approximate dimensions are furnished as a guide only. Each shipping container shall be closed in accordance with method III, waterproofed in accordance with method V, and reinforced as specified in the appendix of PPP-B-636. Toward the end of the contract or when there are less than the required amount per container of the same size, mixed sizes of one type and class only may be packed within the same container.

Downloaded from http://www.everyspec.com

5.2.2.2 Commercial. Cap frames, packaged as specified in 5.1, shall be packed in a manner to ensure carrier acceptance and safe delivery at destination at the lowest transportation rate for such supplies. The quantity per shipping container shall be the same as that normally used by the supplier for retail distribution. Containers shall comply with U. S. Postal Service Manual, Uniform Freight Classification Rules, or National Motor Freight Classification Rules, as applicable.

5.3 Marking. In addition to any special marking required by the contract or order, unit packages, intermediate packages, and shipping containers shall be marked in accordance with MIL-STD-129.

5.3.1 Mixed sizes. Each shipping container packed with mixed sizes shall have a white paper label, 5 X 4 inches in size, securely attached to the end and side. The works "MIXED SIZES" shall be plainly printed on the labels. Under these words, the sizes and quantities of each size of cap frames contained therein shall be legibly printed.

6. NOTES

6.1 Intended use. The cap frame covered by this specification is for use with the service cap covers specified in MIL-C-18186 and MIL-C-23315.

6.2 Ordering data. Purchasers should exercise any desired options offered herein, and procurement documents should specify the following:

6.2.1 Procurement requirements.

(a) Title, number and date of this specification.

(b) Type, class and size required (see 1.2).

(c) Whether first article is required (see 3.2).

(d) Number of cap frames in first article (see 3.2).

(e) Selection of applicable levels of packaging and packing (see 5.1 and 5.2).

6.2.2 Contract data requirements. Data conforming to Data Item Descriptions DI-R-4803, DI-R-4805, DI-T-4901, DI-T-4902, DI-T-4903, and DI-T-4904 will usually be required for delivery in connection with this specification. When so required, such data will be specified for delivery on a DD Form 1423 included in the contract.

6.3 Samples and shade sample. For information regarding availability of sample cap frame, and standard shades specified, address inquiry to the procuring activity issuing the invitation for bids.

6.4 First article. First article examination, test and approval shall be as specified by the contracting officer (see 3.2).

Downloaded from http://www.everyspec.com

6.5 Figures. Figures 1 through 6 are furnished for information purposes only. To the extent of any inconsistencies between the written specification and the figures, the written specification shall govern.

6.6 Marginal notations. Asterisks are not used in this revision to identify changes with respect to the previous issue, due to the extensiveness of the changes.

Preparing activity:

Navy - MC

Project No. 8405-N941

Downloaded from http://www.everyspec.com

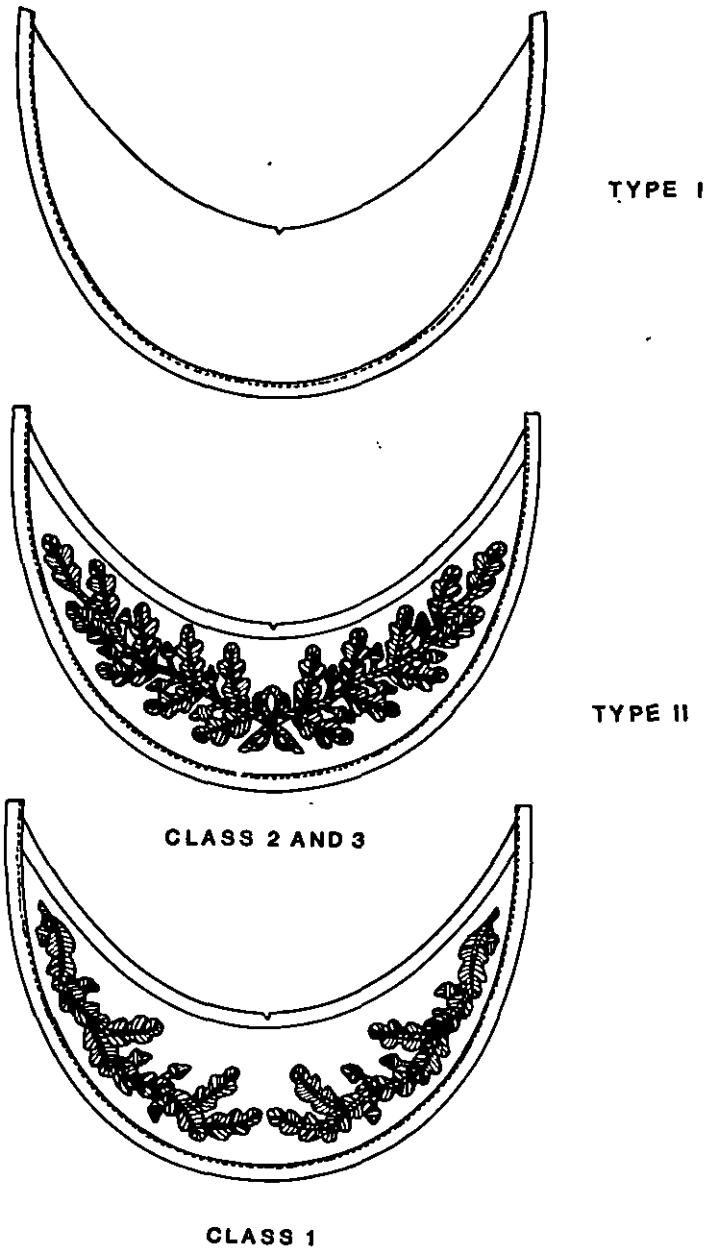

FIGURE 1. FRAME, CAP, MAN'S

Downloaded from http://www.everyspec.com

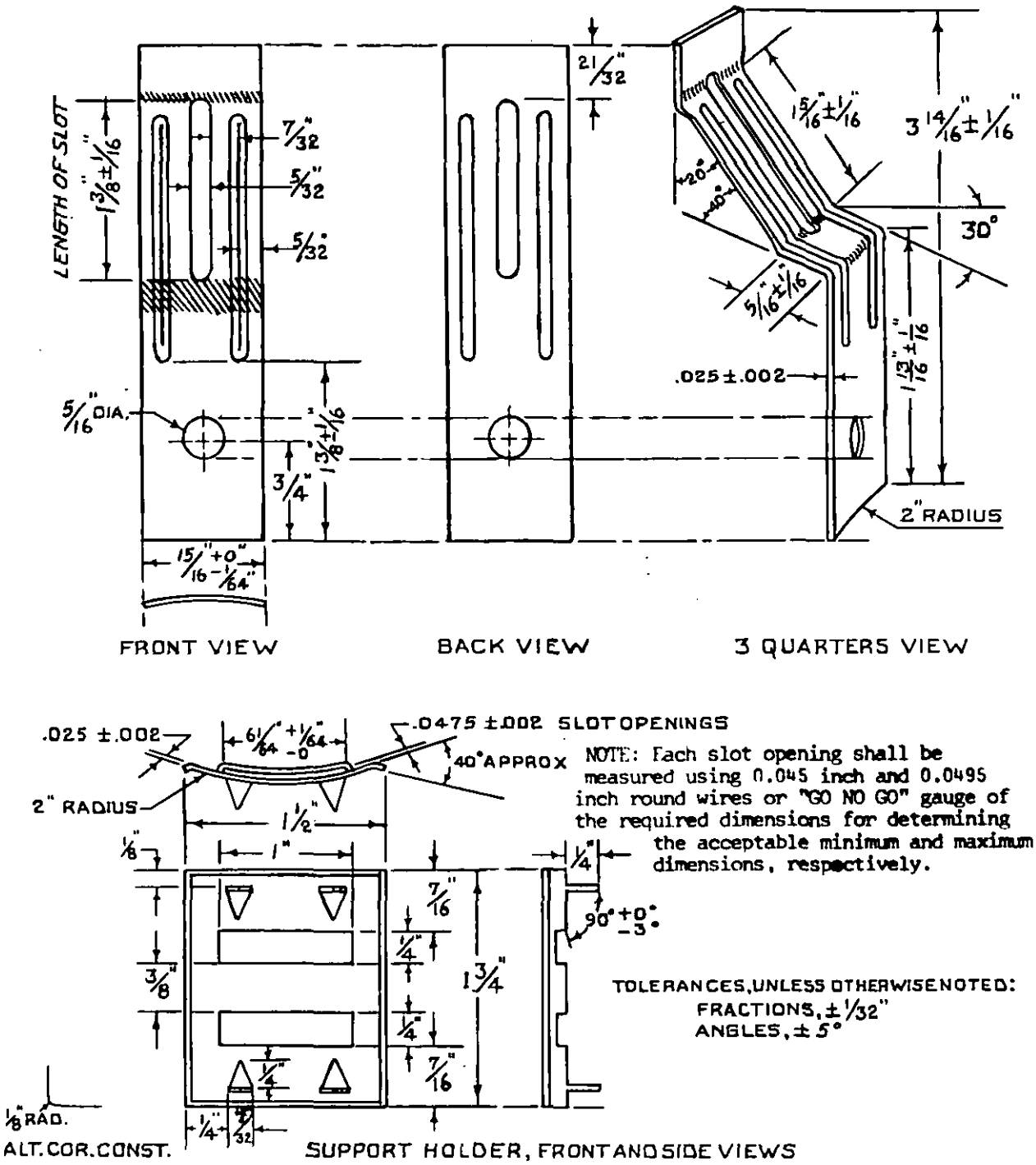

NOTE: Each slot opening shall be measured using 0.045 inch and 0.0495 inch round wires or "GO NO GO" gauge of the required dimensions for determining the acceptable minimum and maximum dimensions, respectively.

TOLERANCES, UNLESS OTHERWISE NOTED:
FRACTIONS, ± 1/32"
ANGLES, ± 5°

FIGURE 2 FRAME, CAP, MANS

Downloaded from http://www.everyspec.com

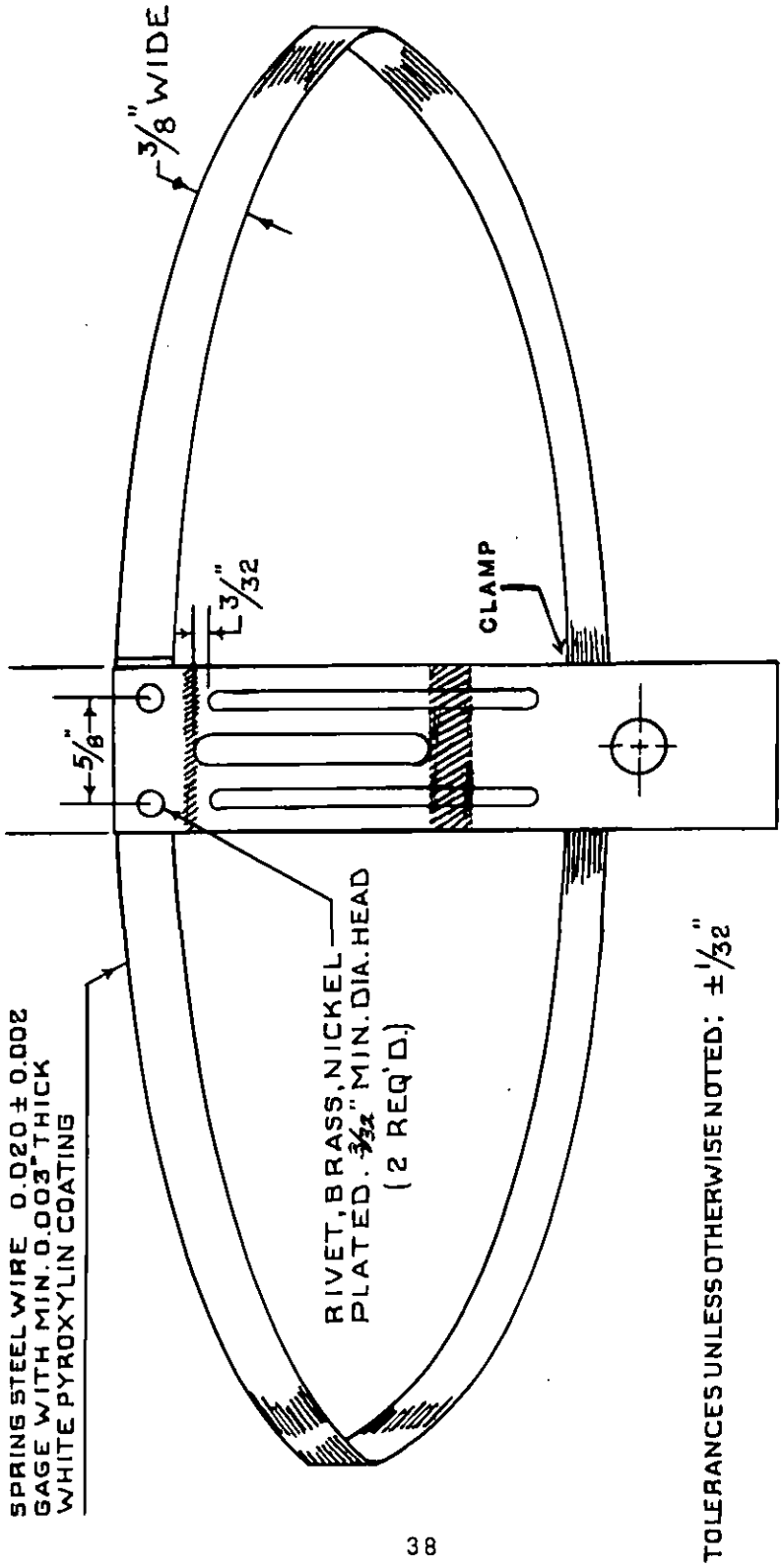

GROMMET AND CROWN SUPPORT

FIGURE 3. FRAME, CAP, MANS

Source: https://assist.dla.mil -- Downloaded: 2016-05-14T13:40Z
Check the source to verify that this is the current version before use.

Downloaded from http://www.everyspec.com

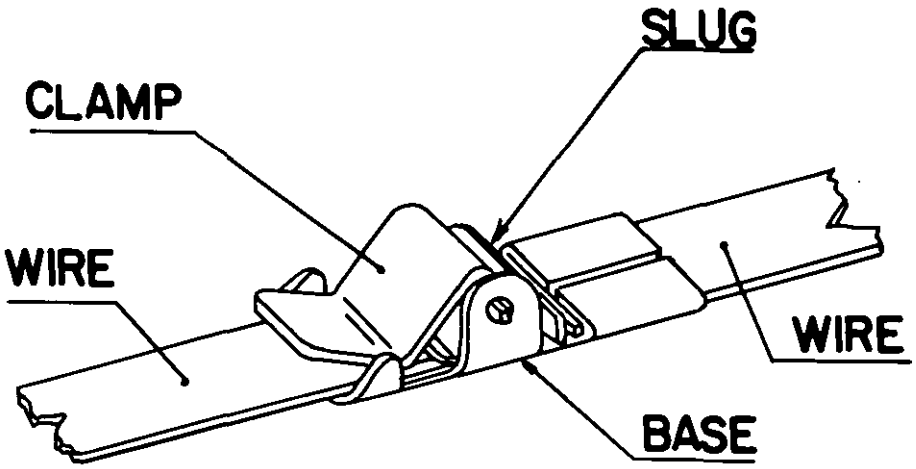

ASSEMBLY

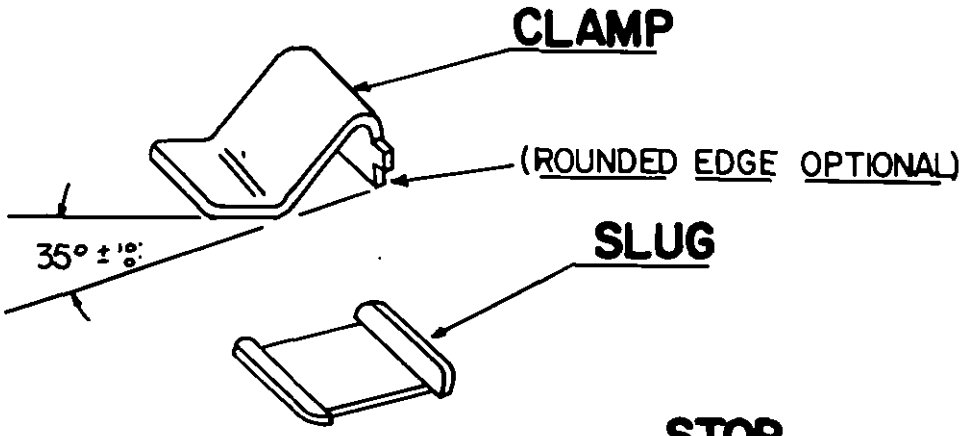

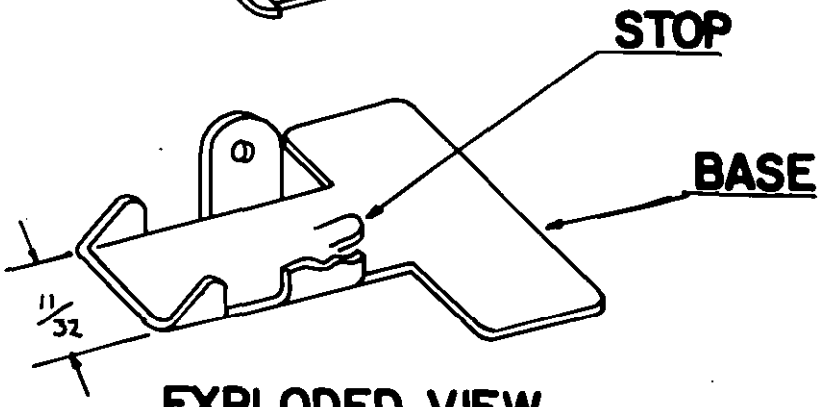

EXPLODED VIEW

FIGURE 4. CLAMP

Downloaded from http://www.everyspec.com

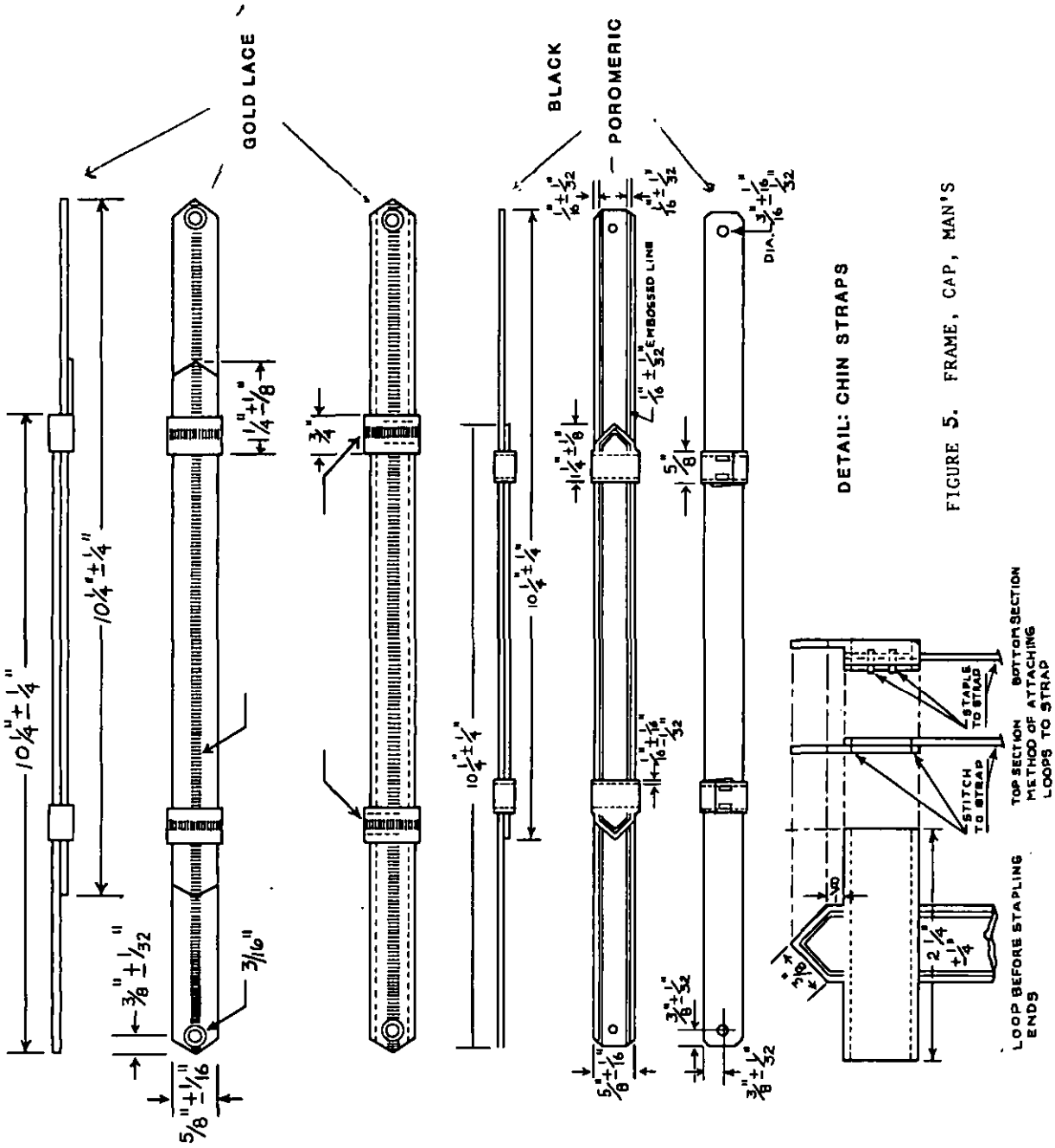

FIGURE 5. FRAME, CAP, MAN'S

Downloaded from http://www.everyspec.com

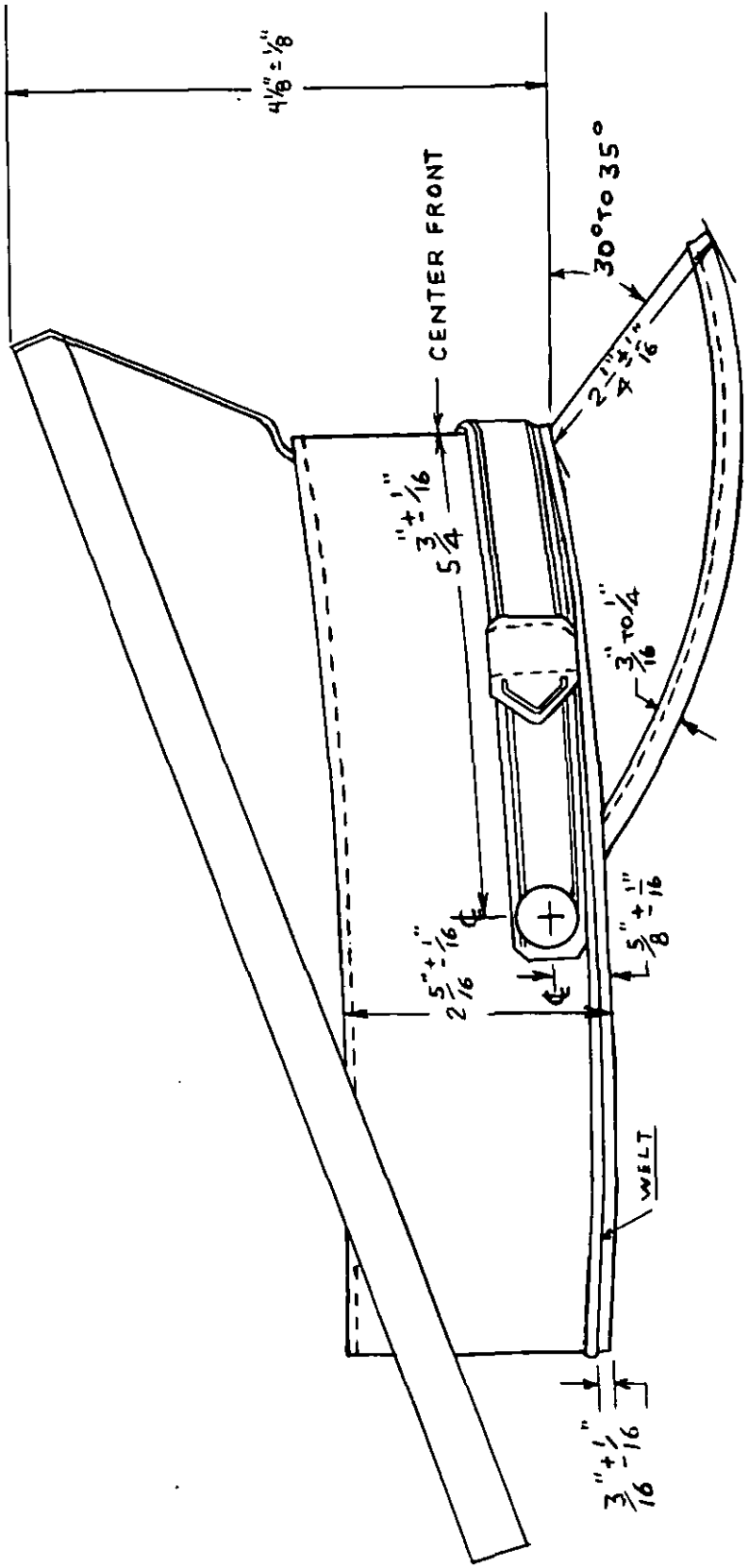

FIGURE 6. FRAME, SERVICE CAP

Downloaded from http://www.everyspec.com

FOLD

DEPARTMENT OF THE NAVY
HEADQUARTERS, U. S. MARINE CORPS
WASHINGTON, D.C. 20380

OFFICIAL BUSINESS
PENALTY FOR PRIVATE USE $300

Commandant of the Marine Corps
Attn: Code LMA-1
Washington, D.C. 20380

FOLD

Downloaded from http://www.everyspec.com

STANDARDIZATION DOCUMENT IMPROVEMENT PROPOSAL

OMB Approval No. 22-R255

INSTRUCTIONS: The purpose of this form is to solicit beneficial comments which will help achieve procurement of suitable products at reasonable cost and minimum delay, or will otherwise enhance use of the document. *DoD contractors, government activities, or manufacturers/vendors who are prospective suppliers of the product* are invited to submit comments to the government. Fold on lines on reverse side, staple in corner, and send to preparing activity. Comments submitted on this form do not constitute or imply authorization to waive any portion of the referenced document(s) or to amend contractual requirements. Attach any pertinent data which may be of use in improving this document. If there are additional papers, attach to form and place both in an envelope addressed to preparing activity.

DOCUMENT IDENTIFIER AND TITLE

MIL-F-20268F(MC) Frame, Cap, Man's

NAME OF ORGANIZATION AND ADDRESS

CONTRACT NUMBER

MATERIAL PROCURED UNDER A

☐ DIRECT GOVERNMENT CONTRACT ☐ SUBCONTRACT

1. HAS ANY PART OF THE DOCUMENT CREATED PROBLEMS OR REQUIRED INTERPRETATION IN PROCUREMENT USE?

A. GIVE PARAGRAPH NUMBER AND WORDING.

B. RECOMMENDATIONS FOR CORRECTING THE DEFICIENCIES

2. COMMENTS ON ANY DOCUMENT REQUIREMENT CONSIDERED TOO RIGID

3. IS THE DOCUMENT RESTRICTIVE?

☐ YES ☐ NO *(If "Yes", in what way?)*

4. REMARKS

SUBMITTED BY *(Printed or typed name and address - Optional)*

TELEPHONE NO.

DATE

DD FORM 1 JAN 72 1426

REPLACES EDITION OF 1 JAN 66 WHICH MAY BE USED

S/N 0102-014-1802