Downloaded from http://www.everyspec.com

MIL-E-24021J
30 June 1986
SUPERSEDING
MIL-E-0024021H(AS)
13 December 1985

MILITARY SPECIFICATION

ELECTRIC POWER MONITORS, EXTERNAL, AIRCRAFT

This specification is approved for use by all Departments and Agencies of the Department of Defense.

1. SCOPE

1.1 Scope. This specification covers electric power monitors which are installed in aircraft to monitor external electric power to prevent unsuitable power from being applied to the equipment in the aircraft.

1.2 Military part numbers. The military part numbers of the monitors shall be as follows:

Military part number	Type of monitor	Mating electric plug	Maximum weight (pounds)	Maximum height (inches)
M24021-2	AC monitor for use with DC-operated contactor and including source of DC for contactor	MS3137-7-50S	2.5	3.0
M24021-4	AC monitor for use with AC or DC-operated contactor (but not including source of AC or DC for contactor)	MS3116-12-10S	2.0	3.0
M24021-6	DC monitor	MS3116-12-10SW	1.5	2.0

Beneficial comments (recommendations, additions, deletions) and any pertinent data which may be of use in improving this document should be addressed to: Systems Engineering and Standardization Department (Code 93), Naval Air Engineering Center, Lakehurst, NJ 08733, by using the self-addressed Standardization Document Improvement Proposal (DD Form 1426) appearing at the end of this document or by letter.

AMSC N/A FSC 6110

DISTRIBUTION STATEMENT A: Approved for public release; distribution is unlimited.

Downloaded from http://www.everyspec.com

2. APPLICABLE DOCUMENTS

2.1 Government documents.

* 2.1.1 Specifications, standards and handbooks. The following specifications, standards and handbooks form a part of this specification to the extent specified herein. Unless otherwise specified, the issues of these documents shall be those listed in the issue of the Department of Defense Index of Specifications and Standards (DODISS) and supplement thereto, cited in the solicitation.

SPECIFICATIONS

Military

MIL-P-116	Preservation, Methods of
MIL-C-6021	Castings, Classification and Inspection of
MIL-S-7742	Screw Threads, Standard, Optimum Selected Series, General Specification for
MIL-S-8879	Screw Threads, Controlled Radius Root With Increased Minor Diameter, General Specification for
MIL-R-39015	Resistors, Variable, Wirewound (Lead Screw, Actuated) Established Reliability, General Specification for
MIL-I-46058	Insulating Compound, Electrical (for coating printed circuit assemblies)
MIL-P-55110	Printed Wiring Boards
MIL-E-81910	Electric Power and Control Equipment, Aircraft, Testing, General Specification for

STANDARDS

Federal

FED-STD-595	Colors

Military

MIL-STD-129	Marking for Shipment and Storage
MIL-STD-130	Identification Marking of U. S. Military Property
MIL-STD-275	Printed Wiring for Electronic Equipment
MIL-STD-454	Standard General Requirements for Electronic Equipment

Downloaded from http://www.everyspec.com

STANDARDS (Continued)

Military (Continued)

MIL-STD-481	Configuration Control - Engineering Changes, Deviations and Waivers (Short Form)
MIL-STD-785	Reliability Program for Systems and Equipment Development and Production
MIL-STD-794	Parts and Equipment, Procedures for Packaging and Packing of
MIL-STD-810	Environmental Test Methods and Engineering Guidelines
MIL-STD-1515	Fastener Systems for Aerospace Application
MIL-STD-1562	Lists of Standard Micro Circuits
MIL-STD-1629	Procedures for Performing a Failure Mode Effects and Criticality Analysis
MIL-STD-2068	Reliability Development Tests
MS3116	Connector, Plug, Electric, Series 1, Solder Type, Straight, Bayonet Coupling
MS3137	Connector, Plug, Electric, Solder Type, Push-Pull Coupling (Class E, P and J)
MS3506	Connector, Receptacle, External Power, Aircraft 28 Volt, DC Operating Power
MS90362	Connector, Receptacle, External Electric Power, Aircraft, 115/200 Volt, 400 Hertz

MILITARY HANDBOOKS

MIL-HDBK-217	Reliability of Electronic Equipment

* 2.1.2 Other Government documents, drawings and publications. The following other Government documents, drawings and publications form a part of this specification to the extent specified herein. Unless otherwise specified, the issues shall be those in effect on the date of the solicitation.

NAVAL MATERIAL COMMAND DOCUMENTS

NAV MAT-P-4855-1	Navy Power Supply Reliability
NAV-MAT-P-9492	Navy Manufacturing Screening Program

Downloaded from http://www.everyspec.com

NAVAL AIR SYSTEMS COMMAND DOCUMENTS

AS-4613	Application and Derating Requirements for Electrical Components
WS-6536	Procedures and Requirements for Preparation and Soldering of Electrical Connections

DEPARTMENT OF DEFENSE

SD-6	Provisions Governing Qualifications

(Copies of specifications, standards, handbooks, drawings, publications and other Government documents required by contractors in connection with specific acquisition functions should be obtained from the contracting activity or as directed by the contracting activity.)

* 2.3 Order of precedence. In the event of a conflict between the text of this specification and the references cited herein (except for associated detail specifications, specification sheets or MS standards), the text of this specification shall take precedence. Nothing in this specification, however, shall supersede applicable laws and regulations unless a specific exemption has been obtained.

3. REQUIREMENTS

* 3.1 Qualification. Electric power monitors furnished under this specification shall be products which are authorized by the qualifying activity for listing on the applicable Qualified Products List (QPL) at the time set for opening of bids (see 4.3 and 6.2).

* 3.2 Materials. Materials used in the manufacture of electric power monitors shall be of high quality suitable for the intended purpose. Materials conforming to contractor's specifications may be used provided the specifications contain provisions for adequate tests and the required life, performance, reliability and warranty period are achieved. The use of the contractor's specifications does not constitute waiver of Government inspection.

* 3.2.1 Metals.

* 3.2.1.1 Corrosion resistance. Materials shall be of a corrosion resisting type or suitably processed to withstand the environmental test requirements of MIL-E-81910.

* 3.2.2 Toxicity and fire resistance. Non-metallic materials used shall be flame resistant, shall not support combustion, and shall be nontoxic when exposed to flame as well as when used under all operating and environmental conditions herein.

3.3 Design and construction.

Downloaded from http://www.everyspec.com

* 3.3.1 Reliability. Reliability shall be considered in each phase of the monitor design process. Techniques used to determine and evaluate the detailed design shall include a stress analysis with associated predictions and allocations in conformance with MIL-HDBK-217, sneak circuit and worst case analysis on all monitor control and protective circuits in accordance with MIL-STD-785, Task 205 and 206, parts derating in accordance with the requirements of AS-4613 for class A equipment, a failure modes and effects analysis, thermal considerations, corrosion control, and electrostatic discharge control. The test program shall include the test, analyze and fix methods of MIL-STD-2068 during all required testing and provisions shall be made for the reporting, analysis, and correction of all failures occurring during the test program. Quality assurance requirements for the program shall be established and manufacturing screening of each power monitor shall be provided by the random vibration and temperature cycling of the burn-in test.

* 3.3.2 Mean Flight Hours Between Failure. While operating under specified conditions, the minimum Mean Flight Hours Between Failure (MFHBF) for the power monitor shall be 10,000 hours for its first 5.5 years of service life, including storage.

* 3.3.3 Failure Mode and Effects Analysis (FMEA). A Failure Mode and Effects Analysis shall be performed in accordance with the requirements of MIL-STD-1629.

* 3.3.4 Maintainability. The electric power monitor shall meet the requirements of this specification for its complete 5.5 year service period, without the need for any routine servicing or maintenance actions. The monitor design shall not include any provision for disassembly or inspection.

* 3.3.5 Repairability. The electric power monitor shall be non-repairable. Upon the expiration of all contractual warranty provisions, a monitor may be returned to its original manufacturer for restoration to a "like new" condition. A restored monitor shall be required to meet all requirements of this specification including the warranty provisions referenced above.

* 3.3.6 Adjustments. No provisions for external adjustments shall be provided and no adjustment or alignments shall be required during installation of any power monitor. All adjustments shall be made at the time of manufacture or when a monitor is being restored to a like new condition. If devices for making adjustments are installed within a monitor, suitable means for locking and sealing shall be provided.

* 3.3.7 Threaded parts. All threads shall conform to MIL-S-7742 or MIL-S-8879. All internal or external parts which are threaded shall be positively locked. Accidental loosening of threaded parts shall be prevented by self-locking nuts, safety wiring or other methods. Staking shall not be used. All removable parts externally screwed into the electric power monitors (screws, bolts, caps, plugs, filters, fittings, etc.) shall be screwed into steel inserts selected and applied in accordance with MIL-STD-1515, Requirement 205.

Downloaded from http://www.everyspec.com

3.3.8 Moving parts. The monitor shall be a completely static solid-state device having no moving part except that one electro-mechanical relay may be used in the M24021-4 monitor for controlling the AC or DC power to operate the external power contactor.

3.3.9 Color. The monitor shall be finished in a color conforming to FED-STD-595, color number 17875.

3.3.10 Cooling. The monitor shall be self-cooled by convection and radiation. No conduction cooling shall be allowed. Safe operation equilibrium temperature shall be maintained for all parts over the specified range of operating conditions, and rated temperatures of parts shall not be exceeded.

3.3.11 Ventilation openings. All ventilation and other openings shall be designed to prevent passage of foreign objects and shall be of such size as to prevent passage of spherical objects of 3/16-inch diameter or larger.

3.3.12 Operating attitude. The monitor shall operate in any attitude.

3.3.13 Dimensions. The dimensions of the monitors shall conform to Figure 1. Where only maximum or minimum dimensions are shown on the figure, the monitor need not have the shape shown on the figure, but the monitor, including all protrusions, shall be contained within the outline shown on the figure.

3.3.14 Weight. The weight of each monitor shall not exceed the value listed in 1.2.

3.3.15 Electric receptacle. Each monitor shall include an electric receptacle which shall be usable with the plug called out in 1.2 and which shall be installed on the monitor in accordance with Figure 1, with the largest polarizing key or keyway of the receptacle at the top center of the receptacle shell.

3.3.16 Compatibility. The monitor shall not degrade the power system's ability to provide the power characteristics defined in 3.4.4.1 or 3.4.4.2, as applicable. DC monitors shall include a fast-acting diode in the output circuit to clamp negative transients to ground.

3.3.17 Conformal coating. Conformal coating to MIL-I-46058 Type UR shall be used on all printed circuit boards.

3.4 Performance. The power monitor shall meet the following performance requirements when applicable.

3.4.1 Input power requirements.

3.4.1.1 Input power to AC monitors. Each AC monitor shall withstand without damage, and shall not reset automatically upon application of three-phase, four-wire, wye-connected, grounded-neutral, alternating potential having the following characteristics when applied according to Figure 2 or 3, as applicable.

Downloaded from http://www.everyspec.com

a. Three-phase, steady-state voltage of a frequency between 300 and 500 Hz between line and neutral, and applied between monitor pin 4 and pins 1, 2 and 3, or between pins G and A, C and E, as applicable. The monitor shall not be damaged when these voltages in the range of 0 to 140 volts RMS are applied continuously and in the range of 140 to 200 volts RMS are applied for a period of one-half hour.

b. Total harmonic content not to exceed 5% of the fundamental and individual harmonic content not to exceed 3% of the fundamental.

c. Any phase sequence.

d. Three-phase steady-state voltages of 115 RMS volts and of 60 Hz frequency applied between monitor pin 4 and 1, 2, 3 or between pins G and A, C and E, as applicable for 30 seconds.

3.4.2 Input power to DC monitors.

* 3.4.2.1 Input power to power lead (pin G) and sense lead (pin B). Each DC monitor shall withstand without damage, and shall not reset automatically regardless of inhibit voltage value upon application of, grounded-negative direct potential having the following characteristics when applied to pins G and H, and B and H, according to Figure 4.

a. Any average value between -80 and 80 volts applied continuously.

b. Ripple from a power source whose individual frequency characteristics are in the 10 Hz to 40 KHz range and whose ripple voltage can vary from 0 to 10 volts peak-to-mean.

c. Spikes from 0 to ± 600 volts from the average voltage level, with a 50-ohm source impedance, a waveform as shown on Figure 5, and a repetition rate of 0 to 50 pulses per second. Application of the spike shall not cause the monitor to disconnect power from the contactor.

d. The current drawn through the sense lead (pin B) shall be less than 50 milliamperes.

* 3.4.2.2 Inhibit voltage at pins C and E. The M24021-6 monitor shall be designed to accept at pins C and E (Figure 4) an aircraft-generated direct DC potential of -15 to 80 volts (inhibit voltage) originating at the starter system. When a 2 to 80 volt inhibit voltage is applied at pin C or E and the monitor is in the reset state (the external contactor in Figure 4 is energized), the monitor shall remain reset and in addition shall be inhibited within 0.1 second from the time the 2 to 80 volt inhibit voltage is applied. In the inhibit mode of operation (2 to 80 volt inhibit voltage is applied at pins C or E), the monitor shall accept any input voltage present at pin G (input at pin G will be within the limits specified by curves of Figure 6, i.e., 10 volts DC to 80 volts DC) and apply it to the aircraft contactor at pin A. The maximum voltage drop between pins G and A shall not exceed 2.5 volts when the monitor input voltage is in the range of 29.1 to 10 volts DC.

Downloaded from http://www.everyspec.com

The 2 to 80 volt inhibit voltage will not be applied to both pins C and E simultaneously when the monitor is operating in the inhibit mode. When a 2 to 80 volt inhibit voltage is applied at pin C or E and the monitor is in the trip state (monitor output at pin A is 0 volts), the monitor shall remain in the trip state and shall reset only manually as specified in paragraph 3.4.4.2.2.

When an inhibit voltage of 1.5 to -15 volts is applied to both pins C and E, the monitor shall function normally as specified in paragraph 3.4.4.2.1. If the inhibit voltage decreases from a higher value to a voltage of less than 1.5 volts and the monitor is in the reset state (the external contact in Figure 4 is energized), the monitor shall function normally as specified in paragraph 3.4.4.2.1 within 0.1 second from the time the inhibit voltage decreases to a voltage of less than 1.5 volts.

The non-inhibited (normal) requirements stated herein shall be met also when pin C or E or both are not connected to any external circuit.

When the inhibit voltage at pins C or E is in the range of 1.5 to 2 volts the monitor may operate either in the inhibited or in the non-inhibited (normal) mode.

The internal circuit of the monitor shall incorporate a 10 kilo-ohm resistor in series with pin C and a 10 kilo-ohm resistor in series with pin E.

3.4.3 Output power requirements.

3.4.3.1 AC monitor including source of DC for contactor. When the external power applied to the M24021-2 monitor meets the reset conditions specified in 3.4.4.1, the monitor shall, upon momentary closing of the reset switch, activate a switching circuit which will apply a direct potential of 26 ± 4 volts between pins 5 and 4 of the monitor receptacle. The internal circuit connected to pin 5 shall have a current capacity of at least 1-1/2 amperes continuously and 15 amperes for 200 milliseconds at 115 volts AC input. The output shall be usable to energize the aircraft AC external power contactor, thus connecting the AC external power to the aircraft load. The cyclic peak-to-mean of ripple voltage to the mean level of the monitor DC output voltage shall be less than 1.5 volts under all input and output conditions.

3.4.3.2 AC monitors excluding power supply. When the external power applied to the M24021-4 monitor meets the reset conditions specified in 3.4.4.1 the monitor shall, upon momentary closing of the reset switch, activate a switching circuit or relay which will connect together pins F and H of the monitor receptacle. The switching circuit between these pins shall have a DC or AC capacity of at least 5 amperes continuously and 15 amperes for 200 milliseconds. The switching circuit shall be usable to control the application of 26 ± 4 volts DC or 112.8 to 118.2 VAC (externally applied to pin H) to the external power contactor, which will connect external AC power to the aircraft load. The voltage drop across pins F and H at the monitor receptacle shall not exceed 0.25 volt under all input and output conditions.

Downloaded from http://www.everyspec.com

* 3.4.3.3 DC monitors. When the external power applied between pins B and A of the M24021-6 monitor meets the reset conditions specified in 3.4.4.2, the monitor shall, upon momentary closing of the reset switch, activate a switching circuit between pins G and A which will apply external power to the aircraft power contactor coil. The switching circuit between pins G and A shall have a continuous current capacity of at least 2-1/2 amperes at 28 volts DC and a current capacity of 15 amperes for 200 milliseconds, which includes the current for the indicator lamp between pin D and ground. When the switching circuit is closed (power connected to the external power contactor coil) the voltage drop between pins G and A shall not exceed 2.5 volts and the indicator light shall be on under all input and output conditions.

3.4.4 Operating values. Each monitor shall operate as specified in 3.4.4.1 or 3.4.4.2, as applicable. The response time specified in 3.4.4.1.1, 3.4.4.2.1 or 3.4.4.2.2, applies to the monitor alone, and does not include the response time of the contactor.

3.4.4.1 Operation of AC monitors. Each AC monitor shall connect the source of AC external power to the aircraft load via operation of the external power contactor (reset) only when all of the reset conditions specified in 3.4.4.1.1 and 3.4.4.1.2 are met for all three phase voltages and the reset switch is momentarily closed. The monitor shall not require the release of the reset switch to activate its switching circuit. Each AC monitor upon reset shall not connect the load or if in operation shall disconnect the load (trip) when any one or more of the trip conditions specified in 3.4.4.1.1 and 3.4.4.1.2 are met for any one or more of the three phase voltages. The reset and trip response times are defined in 3.4.4.1.3 and 3.4.4.1.4.

* 3.4.4.1.1 Frequency and voltage. Each AC monitor shall have reset and trip response times for voltage and frequency as specified in Table I and Figures 7 and 8.

3.4.4.1.2 Phase sequence. The correct phase sequence at the electric receptacle of the monitor is 1-2-3 or A-C-E, as applicable, and the monitor shall not reset if the sequence is otherwise.

3.4.4.1.3 Reset response time. The AC power monitor reset response time shall be measured from the time the reset switch is closed until the monitor connects power to the external power contactor coil. Reset response time shall be as specified in Table I.

3.4.4.1.4 Trip response time. The AC power monitor trip response time shall be measured from the time the applied voltage or frequency goes outside the steady-state voltage or frequency limits of Table I until the monitor disconnects power from the external power contactor coil.

3.4.4.2 Operation of DC monitors.

* 3.4.4.2.1 Normal operation of DC monitors. The DC power monitor shall connect external power to the aircraft load via operation of the external power contactor (reset) only when the external power is of the proper polarity, the voltage and ripple are within the reset limits of Table II and

Downloaded from http://www.everyspec.com

Figure 6, the voltage at pin C and E is less than 1.5 volts and the reset switch is momentarily closed. The monitor shall not require the release of the reset switch to activate its switching circuit between pins G and A. The DC monitor upon reset shall not engage the load, or if in operation shall disconnect the load (trip) when the voltage or ripple or both are outside the limits of Table II and Figure 6. The potential applied to pin G of the monitor shall be applied to the coil of the external power contactor by the switching circuit in the monitor; however, operation shall be controlled by the potential applied to pin B of the monitor.

3.4.4.2.2 Inhibited operation of DC monitors. The monitor shall perform in an inhibited mode as specified in 3.4.2.2.

3.4.4.2.3 Reset response time. The reset response time shall be measured from the time the reset switch is closed until the monitor connects power to the external power contactor coil. Reset response time is specified in Table II.

3.4.4.2.4 Trip response time. The DC monitor trip response time shall be measured from the time the applied power goes outside the steady-state limits of Table II until the monitor disconnects power from the external power contactor coil. Trip response times are specified in Table II.

3.4.4.2.5 Polarity. The DC monitor shall sense the polarity of the applied voltage. The monitor shall not connect external power to the load (reset) when the polarity is incorrect.

3.5 Environmental.

3.5.1 Environmental service conditions. The following environmental service conditions shall meet the requirements of MIL-E-81910.

a. Acceleration

b. Dust

c. Salt fog

d. Mechanical shock

e. Fungus

f. Humidity

g. Vibration

3.5.2 Temperature-altitude.

Downloaded from http://www.everyspec.com

3.5.2.1 Temperature-altitude (operating). Each protective function of the monitor shall operate within the limits of 3.4.4 when tested in accordance with 4.5.3.1.

3.5.2.2 Temperature-altitude (non-operating). Each protective function of the monitor shall operate within the limits of 3.4.4 when tested in accordance with 4.5.3.2.

3.5.3 Burn-in. With applicable nominal voltage and frequency applied, the monitor shall be capable of passing the tests specified in 4.5.4.

3.5.4 Temperature.

3.5.4.1 Room temperature. Each protective function of the monitor shall operate within the limits of 3.4.4.

3.5.4.2 High temperature. Each protective function of the monitor shall operate within the limits of 3.4.4 when tested in accordance with 4.5.7.

3.5.4.3 Low temperature. Each protective function of the monitor shall operate within the limits of 3.4.4 when tested in accordance with 4.5.8.

3.5.5 Explosive atmosphere. Each protective function of the monitor shall operate within the limits of 3.4.4 when tested in accordance with 4.5.9.

3.6 Dielectric strength. The monitor shall withstand a direct potential having an effective value of 1500 ± 100 volts applied between all the pins of the electric receptacle tied together and the monitor case for 1 ± 0.1 minute. A notice (decal) shall be suitably attached to the monitor to indicate: "WARNING! A dielectric test shall not be performed as part of any inspection procedure." At the option of the manufacturer, markings in accordance with MIL-STD-130 may be used in lieu of decals.

3.7 Electromagnetic compatibility. The monitor shall conform to the electromagnetic compatibility requirements of MIL-E-81910.

* 3.8 External circuit. For all tests which require operation of the monitor it shall be connected to an external circuit in accordance with Figures 2, 3 and 4. A monitor shall not reset when an impedance of 10 kilo-ohms or greater is connected across the external circuit reset button shown in the above figures.

3.9 Workmanship. The monitors shall be manufactured and assembled in accordance with MIL-STD-454, Requirement 9.

* 3.10 Identification marking. A suitable nameplate in accordance with MIL-STD-130 shall be attached to each monitor and shall indicate the following information:

Downloaded from http://www.everyspec.com

DO NOT DISASSEMBLE

NON-SERVICEABLE, NON-REPAIRABLE

Electric Power Monitor, External, Aircraft

Voltage and Frequency (as applicable)

Specification MIL-E-24021

Military Part No. M24021- (as applicable)

Manufacturer

Manufacturer's Part No.

Serial Number

Order or Contract Number

Warranty expiration date _____

National Stock Number

* 3.10.1 Precautionary note. The following information shall be printed on the top or on a decal attached to the top (surface opposite the mounting surface) of each AC monitor.

> CAUTION: If external power cannot be applied to the aircraft, check for acceptable external power limits before removing and replacing this electric power monitor. External power must be within the following limits for the monitor to operate and to prevent possible damage to aircraft equipment:
>
> Voltage: 113 to 118 volts per phase
> Frequency: 393 to 407 Hz
> Phase Sequence: A-B-C

On DC monitors the note shall read:

> CAUTION: If external power cannot be applied to the aircraft, check for acceptable external power limits before removing and replacing this electric power monitor. External power must be 24.0 to 29.0 volts to operate this monitor and to prevent possible damage to the aircraft equipment.

The notes shall be legible, prominent and permanent. The word CAUTION shall be in all capital letters and not less than one-half inch tall. The rest of the information shall be all capital letters and not less than one-eighth inch tall.

Downloaded from http://www.everyspec.com

4. QUALITY ASSURANCE PROVISIONS

4.1 Responsibility for inspection. Unless otherwise specified in the contract, the contractor is responsible for the performance of all inspection requirements as specified herein. Except as otherwise specified in the contract, the contractor may use his own or any other facilities suitable for the performance of the inspection requirements specified herein, unless disapproved by the Government. The Government reserves the right to perform any of the inspections set forth in the specification where such inspections are deemed necessary to assure supplies and services conform to prescribed requirements.

4.1.1 Responsibility for compliance. All items must meet all requirements of sections 3 and 5. The inspection set forth in this specification shall become a part of the contractor's overall inspection system or quality program. The absence of any inspection requirements in the specification shall not relieve the contractor of the responsibility of assuring that all products or supplies submitted to the Government for acceptance comply with all requirements of the contract. Sampling in quality conformance does not authorize submission of known defective material, either indicated or actual, nor does it commit the Government to acceptance of defective material.

4.2 Classification of inspection. The inspection requirements specified herein are classified as follows:

a. Qualification inspection (see 4.3).

b. Quality conformance inspection (see 4.4).

4.3 Qualification. Qualification shall be in accordance with SD-6.

4.3.1 Qualification submittal. The qualification inspection sample shall consist of four identical monitors produced in accordance with this specification using normal production equipment and procedures. The manufacturer shall submit with the test sample two copies each of the monitor wiring diagram, schematics, outline drawings, operation instructions and installation instructions. Also required are two copies of the quality conformance inspection data (Table IV) for each monitor certified by the cognizant Government inspector or by an official of the supplying firm, two copies of the failure mode and effects analysis required by 3.3.3, and two copies of the reliability prediction report required by 4.5.11.1.

4.3.2 Qualification inspections and tests. Qualification inspections and tests shall be conducted by the qualifying activity in essentially the order listed in Table III. At the option of the qualifying activity, any or all qualification inspections and tests required for any one of the qualification samples (tests listed under sample number 1, 2, 3 or 4 of Table III) may be conducted on any monitor submitted for qualification. In addition, the qualifying activity has the option to conduct inspections to verify conformance to any of the requirements that were satisfied by certification, or to increase the number of tests points, within specified limits, to further

Downloaded from http://www.everyspec.com

examine any area where marginal performance is observed during the tests herein. These options do not relieve the contractor from the responsibility of fully meeting all requirements of this specification and the specification sheet. The testing of any one monitor will be restricted to four months elapsed time starting with the date a complete monitor is received by the qualifying activity. Any period during which testing is stopped by the qualifying activity because of a monitor failure is to be added to the four months elapsed time. Monitors demonstrating satisfactory performance to the tests conducted during this period will be approved for qualification and listed on the appropriate qualified products list at the end of the four month period.

4.3.3 Qualification retention. Each electric power monitor of the same part number delivered as a qualified item under this specification shall be numbered sequentially in essentially the order that it is submitted for Government quality conformance inspection regardless of the contract under which delivered or by whom purchased. To meet the delivery requirement for the first 50 monitors, 51 monitors must successfully complete the required quality conformance inspection, 50 of which are to be shipped as directed by the applicable contract(s), and one monitor, selected at random by the Government Inspector, is to be forwarded with copies of the required quality conformance inspection data, certified by the cognizant Government Inspector, to the Naval Air Test Center (SY60), Patuxent River, MD 20670, Attention: For NATC-4P7-101. To meet the delivery requirements for each succeeding 150 monitors, 151 monitors must successfully complete the required quality conformance inspection, 150 of which are to be shipped as directed by the applicable contract(s), and one monitor selected at random, forwarded as above. The span of serial numbers of the production monitors from which each qualification retention sample is selected shall be recorded and this information included with the sample. The sample, together with quality conformance inspection data certified by the cognizant Government Inspector, shall be shipped not later than the final monitors in the production group from which selected.

The electric power monitors forwarded to the qualifying activity shall be inspected for similarity to the configuration which was qualified and tested for conformance to this specification. Tests for each qualification retention sample will be selected in rotation by the qualifying activity from those examinations and tests listed in Table III for the qualification samples. The qualifying activity shall select tests from those listed for qualification sample number 1, Table III for the first qualification retention sample submitted; from those listed for qualification sample number 2, Table III, for the second qualification retention sample submitted; from those listed for qualification sample number 3, Table III, for the third qualification retention sample submitted; and from those listed for qualification sample number 4, again for the fourth qualification retention sample, and repeat. In addition, the qualifying activity has the option to conduct any inspections to verify conformance to any of the requirements that were previously satisfied by certification.

Downloaded from http://www.everyspec.com

The testing of any one qualification retention sample will be restricted to two months elapsed time from the time the sample is received by the qualifying activity. Any period during which testing is stopped because of a failure is to be added to the two months elapsed time. Monitors demonstrating satisfactory performance to the qualification retention tests conducted during this period will be approved in writing by the qualifying activity for retention on the applicable qualified products list. At the conclusion of testing a report of the Government test results will be forwarded to the contractor.

Acceptance of monitors submitted for quality conformance inspection shall not be delayed pending results of qualification retention inspection provided qualification retention samples from the most recent prior inspection lot having the same military part numbers met the qualification retention test requirements. Qualification is to be considered sustained as required under 4.4(a) if qualification retention samples have been submitted in conformance to this paragraph and qualification has not been officially rescinded.

In addition to the qualification retention procedure specified above, the qualifying activity may at any time, test any monitor delivered under a production contract to determine conformance to this specification.

4.3.4 Rejection and reinspection of samples submitted for qualification and qualification retention. The contractual calendar warranty period shall not be applicable to any monitor obtained for the primary purpose of laboratory accelerated life type qualification testing. Failed monitors which have been rejected or returned to the manufacturer during qualification or qualification retention may be reworked or have parts replaced to correct defects. Before resubmitting or replacing components which have failed, full particulars concerning the rejection and the corrective action taken by the manufacturer shall be reported in writing by the manufacturer to the qualifying activity. Inspections shall not be resumed until such a report is received. Electric power monitors shall be disqualified if the manufacturer has not either corrected and returned the monitor to the qualifying activity with the required report or has not submitted a corrective program in writing acceptable to the qualifying activity within 30 days where qualification samples are concerned or 10 days where qualification retention samples have failed. Qualification tests may be discontinued at the discretion of the qualifying activity at any time a monitor fails to meet the requirements of this specification.

4.4 Quality conformance inspection. Each electric power monitor produced under a contract requiring qualification to this specification will be accepted if:

a. Qualified in accordance with this specification and if the qualification is sustained in conformance with 4.3.3.

b. The quality conformance inspections of Table IV are conducted by the supplier and are successfully completed. Quality conformance inspection procedures and any changes to the quality conformance inspection described herein shall be subject to the written approval of the qualifying activity.

Downloaded from http://www.everyspec.com

c. Installation instructions, approved by the qualifying activity, are securely attached to each monitor in such a way that they need not be removed for checkout of the component prior to its installation on the aircraft.

d. All changes to the equipment after qualification have been processed in accordance with MIL-STD-481.

4.4.1 Rejection and retest of monitors submitted for acceptance. Monitors which have been rejected may be reworked or have parts replaced to correct the defects, and may be resubmitted for acceptance. Before resubmitting, full particulars concerning previous rejection and the action taken to correct the defects found in the monitor originally shall be furnished to the Government Inspector.

4.4.2 Non-compliance. In the event that more than five percent of the lot of monitors offered for acceptance at any one time fail to pass the individual inspections, the entire lot will be considered to have failed. Acceptance of the product shall be discontinued until corrective action acceptable to the activity responsible for qualification has been taken.

4.5 Inspections. For the following inspections the monitor shall be connected to a test circuit conforming to Figure 2, 3 or 4.

4.5.1 Functional inspections.

4.5.1.1 Input power to AC monitors. The AC monitor shall be tested using an AC power source having the characteristics specified in 3.4.1.1. The AC monitor shall not be damaged and shall not reset automatically when the input power conditions specified in 3.4.1.1 are applied to the monitor.

4.5.1.2 Input power to power lead (pin G) and sense lead (pin B). The DC monitor shall be tested using a DC power source having the characteristics specified in 3.4.2.1. The DC monitor shall not be damaged and shall not reset automatically when the input power conditions specified in 3.4.2.1 are applied to the monitor.

4.5.1.3 Inhibit voltage to pins C and E. The DC monitor shall be tested during application of an inhibit voltage having the characteristics specified in 3.4.2.2. The performance specified in 3.4.2.2 shall be met.

4.5.1.4 AC monitor including source of DC for contactor. The specified output current capacity of the M24021-2 monitor shall be tested by applying loads to the monitor corresponding to the currents and time duration specified in 3.4.3.1. The performance specified in 3.4.3.1 shall be met.

4.5.1.5 AC monitors excluding power supply. The specified output current capacity of the M24021-4 monitor shall be tested by applying loads to the monitor corresponding to the currents and time duration specified in 3.4.3.2. The performance specified in 3.4.3.2 shall be met.

Downloaded from http://www.everyspec.com

4.5.1.6 DC monitors. The specified output current capacity of the M24021-6 monitor shall be tested by applying loads to the monitor corresponding to the currents and time duration specified in 3.4.3.3. The performance specified in 3.4.3.3 shall be met.

4.5.1.7 Operation of AC monitors. Operation of the AC monitors shall be tested in accordance with and meet the requirements of 3.4.4.1.

4.5.1.8 Operation of DC monitors. Operation of the DC monitors shall be tested in accordance with and meet the requirements of 3.4.4.2.

4.5.2 Environmental service conditions. The monitor shall be tested in accordance with MIL-E-81910 for the following environmental service conditions.

a. Acceleration

b. Dust

c. Salt fog

d. Mechanical shock

e. Fungus

f. Humidity

g. Vibration

4.5.3 Temperature-altitude.

4.5.3.1 Temperature-altitude (operating). The monitor shall be subjected to a simulated altitude of 10,000 feet at 71°C for a period of 6 hours. At the conclusion of the exposure period and while still at test altitude and temperature, the monitor shall be operated to evaluate each protective function. Operation shall be within the limits specified in 3.4.4.

4.5.3.2 Temperature-altitude (non-operating). Starting at room ambient, the monitor shall be subjected to a simulated altitude condition of 50,000 feet at -55°C ambient temperature for a period of 2 hours (or until the monitor stabilizes), after which, the monitor shall be returned to room ambient and tested in accordance with 4.5.1. This process shall be repeated five times.

4.5.4 Burn-in. With applicable nominal voltage and frequency applied, the monitor shall be subjected to the burn-in test of MIL-E-81910 except that the 20-minute random vibration test shall be conducted after the 9-hour temperature test at room ambient temperature. Sufficient test data shall be recorded during these tests to assure conformance to the operational requirements of 3.4.4.1 and 3.4.4.2, as applicable.

4.5.5 Visual and mechanical inspection. The monitor shall be inspected to determine compliance with this specification with respect to materials, workmanship, cleanliness, connections, markings, dimensions and weight.

Downloaded from http://www.everyspec.com

4.5.6 Room temperature. Each protective function of the monitor shall be operated. Operation shall be within the limits specified in 3.4.4.

4.5.7 High temperature. The monitor shall be placed in the chamber and the temperature of the chamber shall be increased to 71°C. The monitor shall be exposed to that temperature for 6 hours. A relative humidity of not more than 15 percent shall be maintained in the chamber throughout the exposure period. At the conclusion of the exposure period and while still at 71°C, the monitor shall be operated to evaluate each protective function. Operation shall be within the limits specified in 3.4.4.

4.5.8 Low temperature. The monitor shall be placed in the chamber and the temperature of the chamber shall then be reduced to and maintained at -55°C for 6 hours. At the conclusion of the exposure period and while still at -55°C, the monitor shall be operated to evaluate each protective function. Operation shall be within the limits specified in 3.4.4.

4.5.9 Explosive atmosphere. The monitor shall be subjected to the Explosive Atmosphere Test Procedure I, Method 511, of MIL-STD-810.

4.5.10 Electromagnetic compatibility. The monitor shall be tested for electromagnetic compatibility in accordance with MIL-E-81910. The monitor shall be tested in the reset and trip modes of operation.

4.5.11 Reliability. The reliability test shall consist of the tests specified in 4.5.11.2 and 4.5.11.3. If an electric power monitor qualification sample should fail during either of these tests, the monitor supplier shall be required to submit a report to the qualifying activity identifying the failure, its cause and the required corrective action. The qualifying activity may, at its discretion, require that all qualification test samples be corrected and the failed test repeated in its entirety.

4.5.11.1 Predicted reliability. A reliability prediction report for the qualification test hardware shall be submitted for approval to the qualifying activity with the qualification samples. This report shall include an analysis of all parts when subjected to the most severe natural environmental stresses of this specification. Failure rate data source shall be MIL-HDBK-217, where applicable. Other failure rate data sources, including contractor inhouse data, shall be substantiated in the reliability prediction report. The ratios of rated strength under the specified environmental condition to the applied stresses shall be not less than that required to give a predicted MFHBF (Mean Flight Hour Between Failures) of at least 10,000 hours.

4.5.11.2 Accelerated function test. The monitor shall undergo 20,000 operational cycles with each cycle consisting of the following:

a. Application of 115 ± 2 volts at 400 ± 10 Hz or 27 ± 2 VDC (as applicable) to the monitor.

b. Closing the reset switch momentarily to pick up the monitor.

c. Operation of the monitor while picked up for at least 5 seconds.

Downloaded from http://www.everyspec.com

d. Operation of the monitor in the trip mode by application of a voltage or frequency outside the steady-state limits for at least 5 seconds. This test may run either continuously or intermittently under room ambient conditions. After this test, the monitor shall be subjected to the test of 4.5.1.

4.5.11.3 Endurance test. The monitor shall be operated for 1000 hours in the following conditions:

Temperature and humidity	Room ambient
Altitude	0 - 5000 feet
AC voltage (input)	115 ± 2 volts at 400 ± 10 Hz
DC voltage (output)	As required by 3.4.3.1, 3.4.3.2 & 3.4.3.3
DC voltage (input)	27 ± 2 volts

The test may be run continuously or intermittently. Any period of operation shall be long enough to permit the temperature of the monitor to become stable. Once every hundred hours, the monitor shall be tested in accordance with 4.5.1.

4.5.12 Dielectric strength. Before assembly, a direct potential having an effective value of 1500 ± 100 volts shall be applied between all the pins of the electrical receptacle tied together and the monitor case for 1 ± 0.1 minute. There shall not be any insulation breakdown. A dielectric test shall not be performed as part of any inspection procedure.

5. PACKAGING

5.1 Preservation-packaging. Preservation-packaging shall be in accordance with MIL-STD-794, Level A or C, as specified in contract or order (see 6.1).

5.1.1 Level A. For Level A packaging, preservation shall be in accordance with MIL-P-116, Method II, without preservation compounds, using metal reusable containers unless otherwise specified.

5.1.2 Level C. For Level C the monitor shall be preserved and packaged individually in accordance with the manufacturer's commercial practice.

5.2 Packing. Packing shall be in accordance with MIL-STD-794, Level A, B or C, as specified in contract or order.

5.3 Marking. Interior and exterior containers shall be marked in accordance with MIL-STD-794 and MIL-STD-129.

6. NOTES

6.1 Ordering data. Procurement documents should specify the following:

Downloaded from http://www.everyspec.com

a. Title, number and date of this specification.

b. Military Part Number.

c. Required level of packaging and packing.

d. Type of container.

e. Qualification retention samples.

f. Installation instructions, handbooks or manuals, when required.

6.2 Qualification. With respect to products requiring qualification, awards will be made only for products which are, at the time set for opening of bids, qualified for inclusion in Qualified Products List (QPL) whether or not such products have actually been so listed by that date. The activity responsible for this Qualified Products List is the Commanding Officer, Naval Air Engineering Center (SESD) (Code 93), Lakehurst, NJ 08733-5100, and the qualifying activity is the Naval Air Test Center, Patuxent River, MD. Information concerning qualification may be directed to the Commander, Naval Air Test Center, Attn: Code SY60, Patuxent River, MD 20670.

6.3 Qualification retention samples. For each quotation and based on all production contracts obtained, it will be the contractor's responsibility to inform the procuring activity of the exact number of qualification retention samples required for forwarding to the Qualifying Activity. If the proper number of retention samples is not itemized in the contract, then the contractor will, without additional cost to the Government, forward to the Qualifying Activity whatever number of retention samples is determined by the cognizant Government Inspector to be required by paragraph 4.3.3 of this specification.

6.4 Design guides. The following paragraphs contain design guidelines based on actual experience that should be addressed and considered by the contractor when an electric power monitor is to be proposed/developed to this specification.

6.4.1 Castings. Castings should be in accordance with MIL-C-6021. All castings containing reinforced threaded holes should be classified Class 2, Grade C, in areas within three radii of the hole centerline for the depth of the hole.

6.4.2 Standard parts. Military standard parts, identified by their military part number, are desired. Commercial parts such as screws, bolts, nuts, washers, etc., may be used provided they possess suitable properties and are directly replaceable by military standard parts without equipment modification. When such commercial parts are used, the part number for the corresponding military standard part shall be referenced on the applicable parts list and on the contractor's drawings.

Downloaded from http://www.everyspec.com

6.4.3 Semi-conductors and electron tubes. Transistors and diodes other than rotating rectifiers should be chosen and applied as outlined in MIL-STD-454, Requirement 30. Electron tubes of either the vacuum or gas filled types should not be used.

6.4.4 Safety and internal electric connections. Monitor safety and internal connections should be made in accordance with MIL-STD-454, Requirements 1 and 69.

6.4.5 Adjustable resistors. Only sealed adjustable resistors conforming to MIL-R-39015 should be used.

6.4.6 Microelectronic devices. Microelectronic devices should be chosen, applied and reported in accordance with Requirement 64 of MIL-STD-454 and should be listed in MIL-STD-1562.

6.4.7 Capacitors. Capacitors should be chosen, applied and reported in accordance with MIL-STD-454, Requirement 2. The use of wet slug tantalum capacitors is not recommended.

6.4.8 Environmental stress screening. Environmental stress screening of electronic parts should be used where required to achieve the electric power monitor Mean Flight Hours Between Failures (MFHBF) as specified in 3.3.2.

6.5 Installation. The monitors should be connected in accordance with Figure 9, 10 or 11, as applicable.

6.5.1 Reset switch. The aircraft manufacturer should provide a reset switch as shown in Figure 9, 10 or 11, as applicable. The switch should be a pushbutton type, spring-loaded to the open (norm) position, with momentary movement to the reset (closed) position. The switch should not include any means for locking it in the reset position.

6.6 Manufacturing requirements. The appropriate technical requirements contained in the following list of documents should be applied by the manufacturer where applicable in order to achieve and maintain the Government's established policy requiring an acceptable level of manufacturing quality for all electrical/electronic equipment.

Document	Title
MIL-STD-454	Standard General Requirements for Electronic Equipment
MIL-STD-275	Printed Wiring for Electronic Equipment
MIL-P-55110	Printed Wiring Boards
WS-6536	Procedures and Requirements for Preparation and Soldering of Electrical Connections
NAV MAT-P-4855-1	Navy Power Supply Reliability
NAV MAT-P-9492	Navy Manufacturing Screening Program

Downloaded from http://www.everyspec.com

6.7 Overload protection. The aircraft manufacturer should provide a circuit protective device for each monitor in order to protect the circuit which supplies or carries (as applicable) the current to the contactor. Monitors should be protected for 10 amperes as follows: M24021-2 monitors at pin 5, M24021-4 monitors at pin F, and M24021-6 monitors at pin A. The device should be a fast-acting type designed for protection of semi-conductor devices.

6.8 Subject term (key word) listing.

AC monitors
Aircraft power monitors
DC monitors
Electric power monitors
External power monitors

Custodians:
Army - AV
Navy - AS

Review activities:
DLA - GS

Preparing activity:
Navy - AS
(Project No. 6110-0300)

SUBJECT : STANAG 1343 NAT EDITION 1 AMENDMENT 27 - ASRVC SYSTEM

Downloaded from http://www.everyspec.com

TABLE I. AC monitor reset and trip values.

Part 1. Operation when monitor has been previously tripped, or been deenergized, and reset switch is now operated.

Function	Activation of external circuit or aircraft load		
	Not permitted	Permitted but not required	Required
Potential in Volts	Below 110.0 Above 121.0	110.0 to 112.8 118.2 to 121.0	112.8 to 118.2
Frequency in Hertz	Below 385.0 Above 415.0	385.0 to 390.0 410.0 to 415.0	390.0 to 410.0
Reset response time requirement is 0 to 1.5 seconds.			

Part 2. Operation when monitor has activated the external circuit or aircraft load in accordance with Part 1 and the power characteristics are now outside of the limits.

Function	Monitor tripping (disconnect external power from external circuit or the aircraft load)
Voltage	Figure 7
Frequency	Figure 8

Downloaded from http://www.everyspec.com

TABLE II. DC monitor reset and trip values.

Part 1. Operation when monitor has been previously tripped, or been deenergized, and reset switch is now operated.

Function	Activation of external circuit or aircraft load		
	Not permitted	Permitted but not required	Required
Potential in Volts	Below 23.0 Above 29.9	23.0 to 23.9 29.1 to 29.9	23.9 to 29.1
Ripple In Volts, Peak-to-Mean, 10 to 40 Kilohertz	Above 3.0	2.0 to 3.0	Below 2.0
Reset response time requirement is 0 to 1.5 seconds.			

Part 2. Operation when monitor has activated the external circuit or aircraft load in accordance with Part 1 and power characteristics are now outside of the limits.

Function	Monitor tripping (disconnect external power from the external circuit or the aircraft load)		
Voltage	See Figure 6		
Ripple in Volts, Peak-to-Mean, 10 to 40 Kilohertz	Not permitted	Permitted but not required	Required
	Below 2.0	2.0 to 3.0	Above 3.0
		Trip response time requirement is 0.5 to 1.0 second	

Downloaded from http://www.everyspec.com

TABLE III. Qualification inspection.

	Requirement paragraph	Test paragraph	Qualification Sample Number			
			1	2	3	4
			Qualification Retention Sample Number			
			1, 5, 9, etc.	2, 6, 10, etc.	3, 7, 11, etc.	4, 8, 12, etc.
Input power to AC monitors	3.4.1.1	4.5.1.1	X	X	X	X
Input power to power lead (pin G) and sense lead (pin B)	3.4.2.1	4.5.1.2	X	X	X	X
Inhibit voltage to pins C and E	3.4.2.2	4.5.1.3	X	X	X	X
AC monitor including source of DC for contactor	3.4.3.1	4.5.1.4	X	X	X	X
AC monitors excluding power supply	3.4.3.2	4.5.1.5	X	X	X	X
DC monitors	3.4.3.3	4.5.1.6	X	X	X	X
Operation of AC monitors	3.4.4.1	4.5.1.7	X	X	X	X
Frequency and voltage	3.4.4.1.1	4.5.1.7	X	X	X	X
Phase sequence	3.4.4.1.2	4.5.1.7	X	X	X	X
Reset response time	3.4.4.1.3	4.5.1.7	X	X	X	X
Trip response time	3.4.4.1.4	4.5.1.7	X	X	X	X
Operation of DC monitors	3.4.4.2	4.5.1.8	X	X	X	X
Normal operation of DC monitors	3.4.4.2.1	4.5.1.8	X	X	X	X
Inhibited operation of DC monitors	3.4.4.2.2	4.5.1.8	X	X	X	X
Reset response time	3.4.4.2.4	4.5.1.8	X	X	X	X
Trip response time	3.4.4.2.4	4.5.1.8	X	X	X	X
Polarity	3.4.4.2.5	4.5.1.8	X	X	X	X
Temperature-altitude (operating)	3.5.2.1	4.5.3.1		X		
Temperature-altitude (non-operating)	3.5.2.2	4.5.3.2		X		
Burn-in	3.5.3	4.5.4				
Room temperature	3.5.4.1	4.5.6	X	X	X	X
High temperature	3.5.4.2	4.5.7	X	X		
Low temperature	3.5.4.3	4.5.8	X	X		
Explosive atmosphere	3.5.5	4.5.9			X	
Dielectric strength	3.6	4.5.12				
Acceleration	3.5.1	4.5.2	X			
Dust	3.5.1	4.5.2				X
Salt fog	3.5.1	4.5.2	X			
Mechanical shock	3.5.1	4.5.2		X		
Fungus	3.5.1	4.5.2		X		
Electromagnetic compatibility	3.7	4.5.10	X			X
Humidity	3.5.1	4.5.2			X	
Vibration	3.5.1	4.5.2			X	X
Reliability	3.3.1	4.5.11	X	X		
Visual and mechanical inspection		4.5.5	X	X	X	X

Downloaded from http://www.everyspec.com

TABLE IV. Quality conformance inspection.

	Requirement paragraph	Test paragraph
Burn-in	3.5.3	4.5.4
Visual and mechanical inspection		4.5.5
Dielectric strength	3.6	4.5.12

Downloaded from http://www.everyspec.com

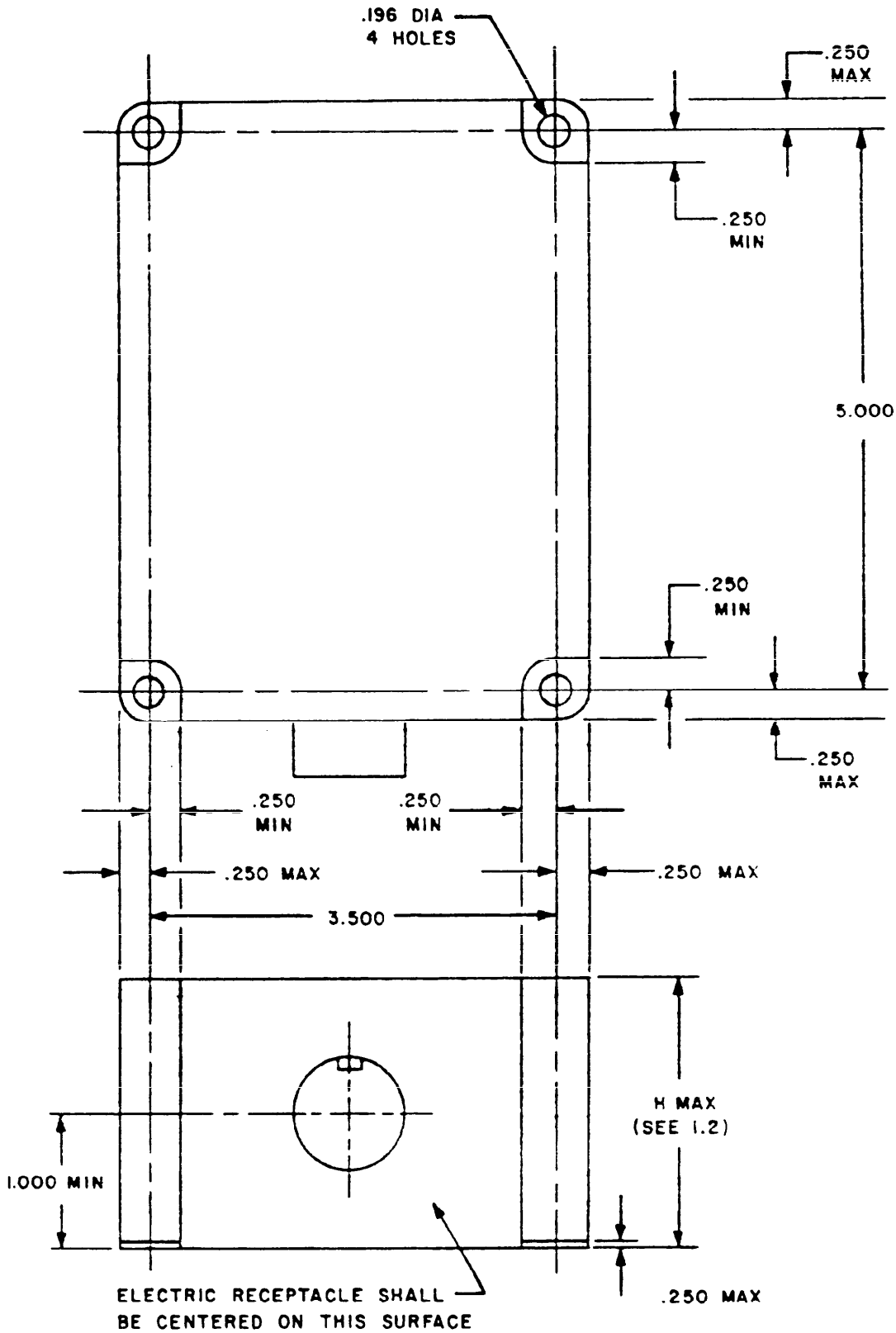

ALL DIMENSIONS ARE IN INCHES. ALL TOLERANCES ARE ± .010.

FIGURE 1. Dimensions.

Downloaded from http://www.everyspec.com

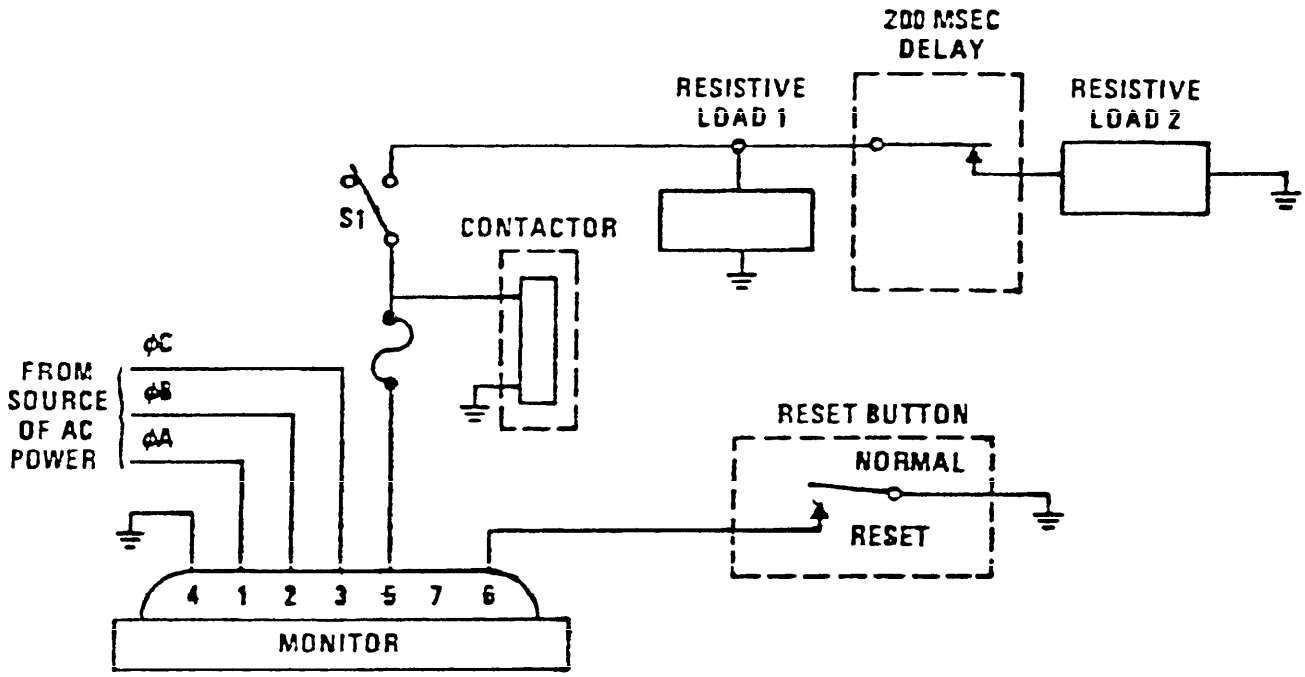

NOTES:

1. Switch S1 is closed (at least 1 second after contactor has been activated) only to perform test of 4.5.1.4.

2. The value of load 1 is selected so that the monitor output current is equal to or greater than 1.5 amperes with load 2 not in the circuit (200 msec delay has timed out).

3. The value of load 2 is selected so that the monitor output current is equal to or greater than 15 amperes with load 2 connected in the circuit (during 200 msec delay).

4. The contactor shall have contacts rated 3PDT, 115/200V, 400Hz, 200 amperes or greater.

FIGURE 2. Test circuit for M24021-2 monitor.

Downloaded from http://www.everyspec.com

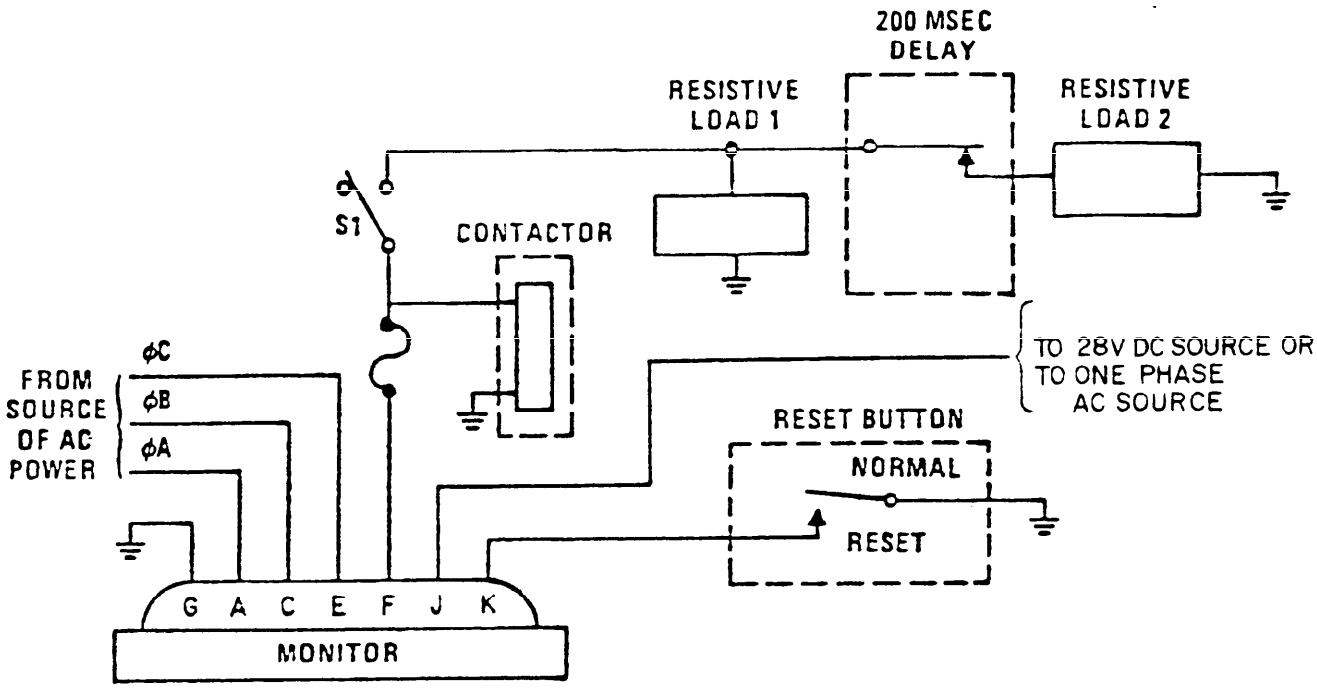

NOTES:

1. Switch S1 is closed (at least 1 second after contactor has been activated) only to perform test of 4.5.1.5. The two contactor types specified in Note 4 shall be utilized.

2. The value of load 1 is selected so that the monitor output current is equal to or greater than 5 amperes with load 2 not in the circuit (200 msec delay has timed out).

3. The value of load 2 is selected so that the monitor output current is equal to or greater than 15 amperes with load 2 connected in the circuit (during 200 msec delay).

4. The contactor shall have contacts rated 3 PDT, 115/200V, 400Hz, 200 amperes or greater. Two types of this contactor shall be used: one operated by 28 VDC and one operated by 115 VAC.

5. Approximately one-half of the tests shall be performed using each of the two contactor types.

FIGURE 3. Test circuit for M24021-4 monitor.

Downloaded from http://www.everyspec.com

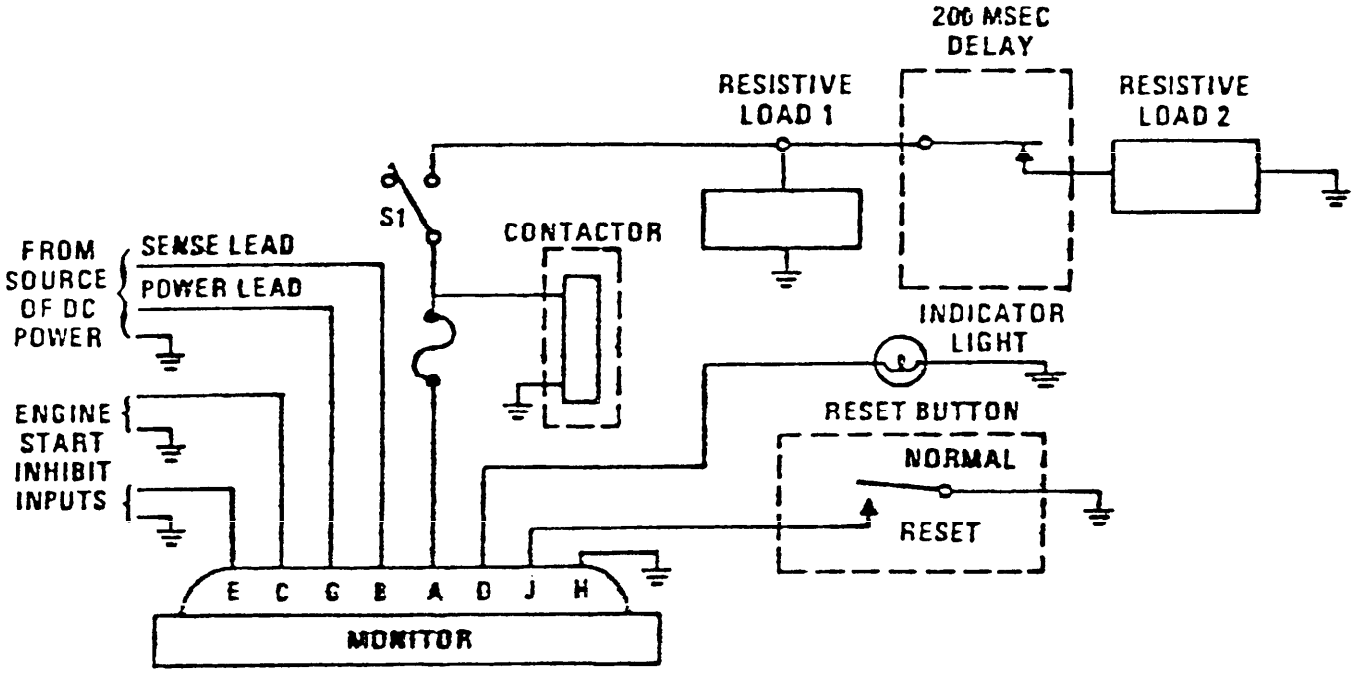

NOTES:

1. Switch S1 is closed (at least 1 second after contactor has been activated) only to perform test of 4.5.1.6.

2. The value of load 1 is selected so that the monitor output current is equal to or greater than 2.5 amperes with load 2 not in the circuit (200 msec delay has timed out).

3. The value of load 2 is selected so that the monitor output current is equal to or greater than 15 amperes with load 2 connected in the circuit (during 200 msec delay).

4. The contactor shall have contacts rated 28 VDC, 300 amperes or greater.

FIGURE 4. Test circuit for M24021-6 monitor.

Downloaded from http://www.everyspec.com

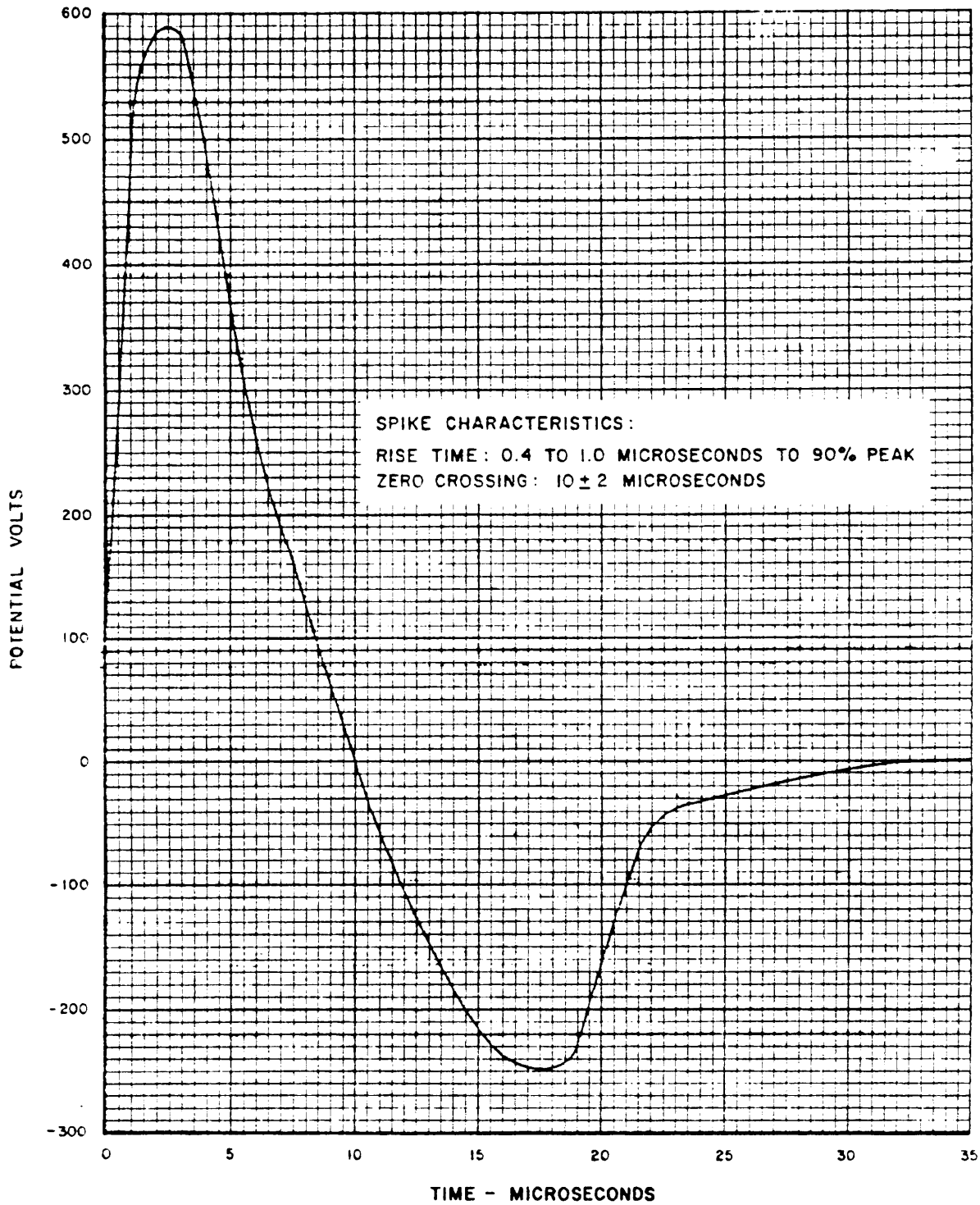

FIGURE 5. Spike susceptibility test waveform.

Downloaded from http://www.everyspec.com

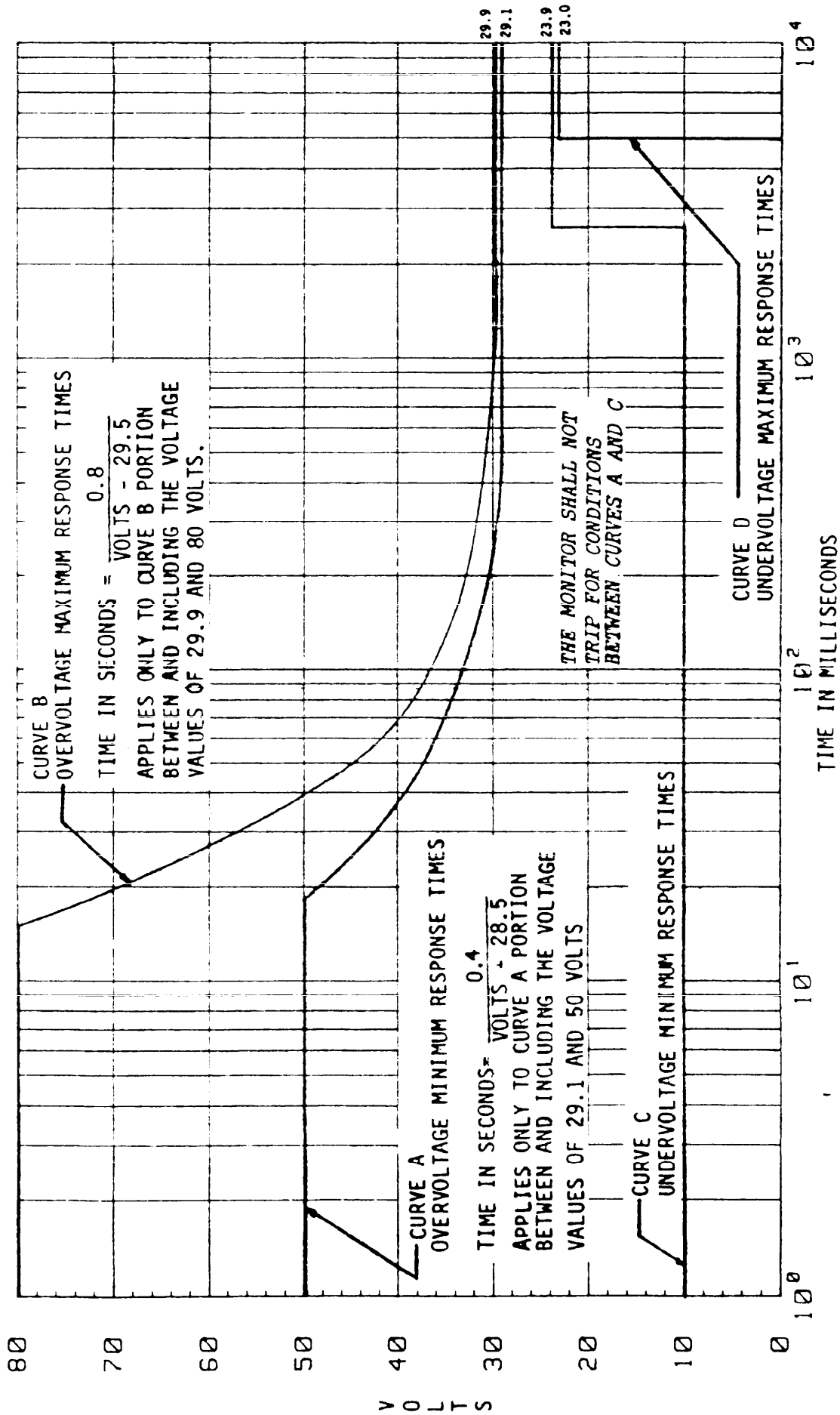

FIGURE 6. D.C. overvoltage/undervoltage response curves

Downloaded from http://www.everyspec.com

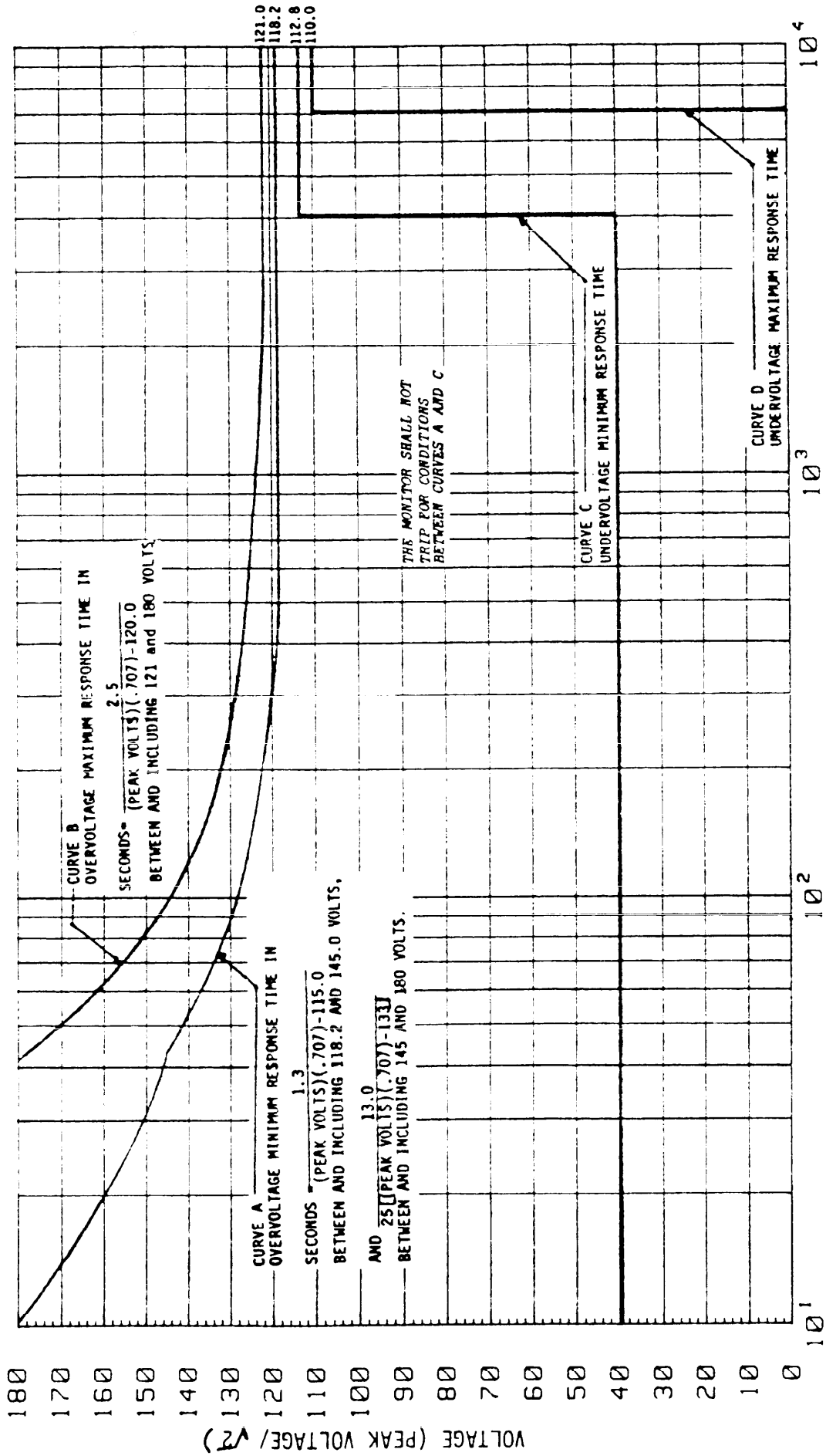

FIGURE 7. A.C. overvoltage/undervoltage response curves

Downloaded from http://www.everyspec.com

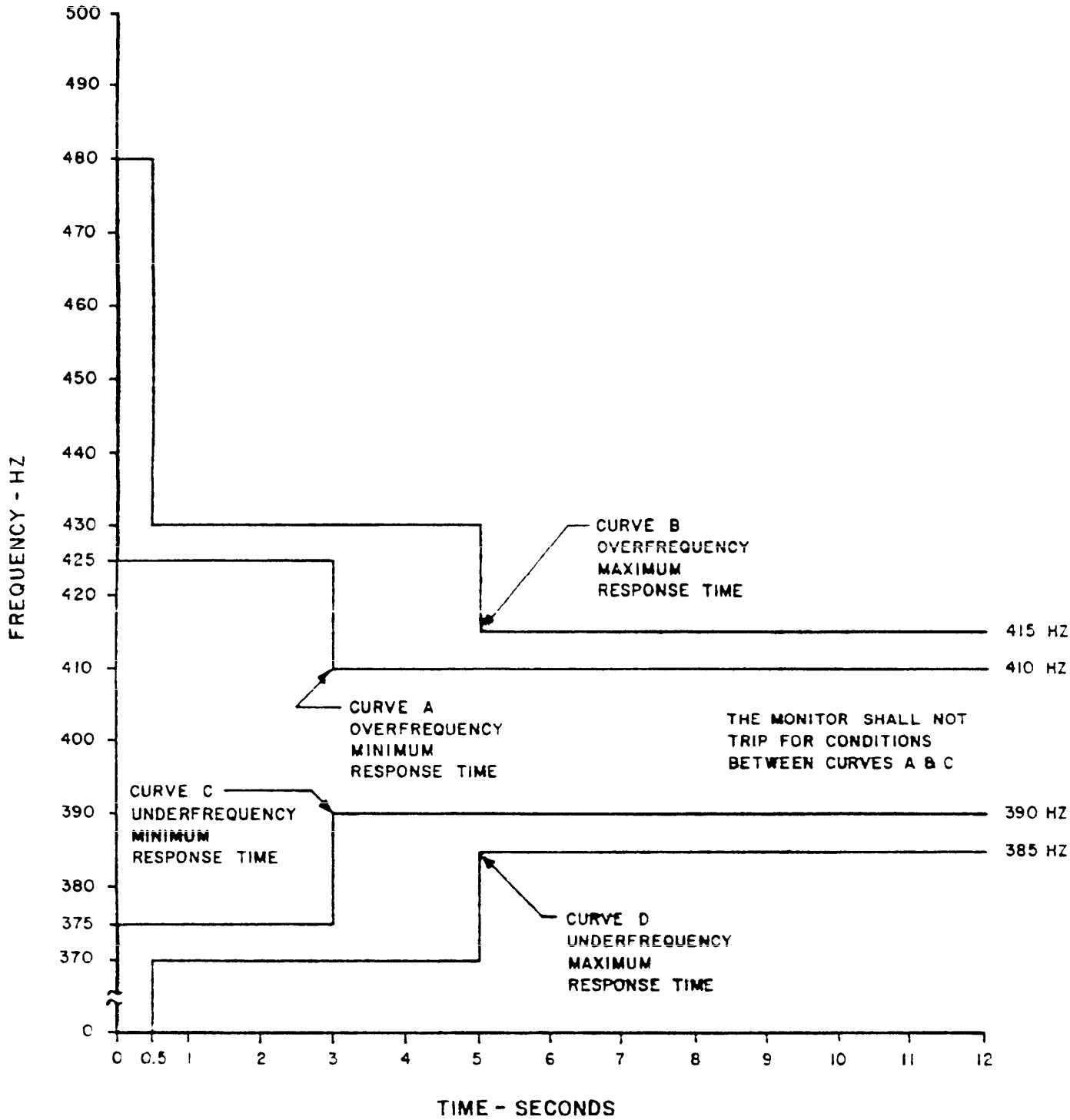

FIGURE 8. Frequency versus response time.

Downloaded from http://www.everyspec.com

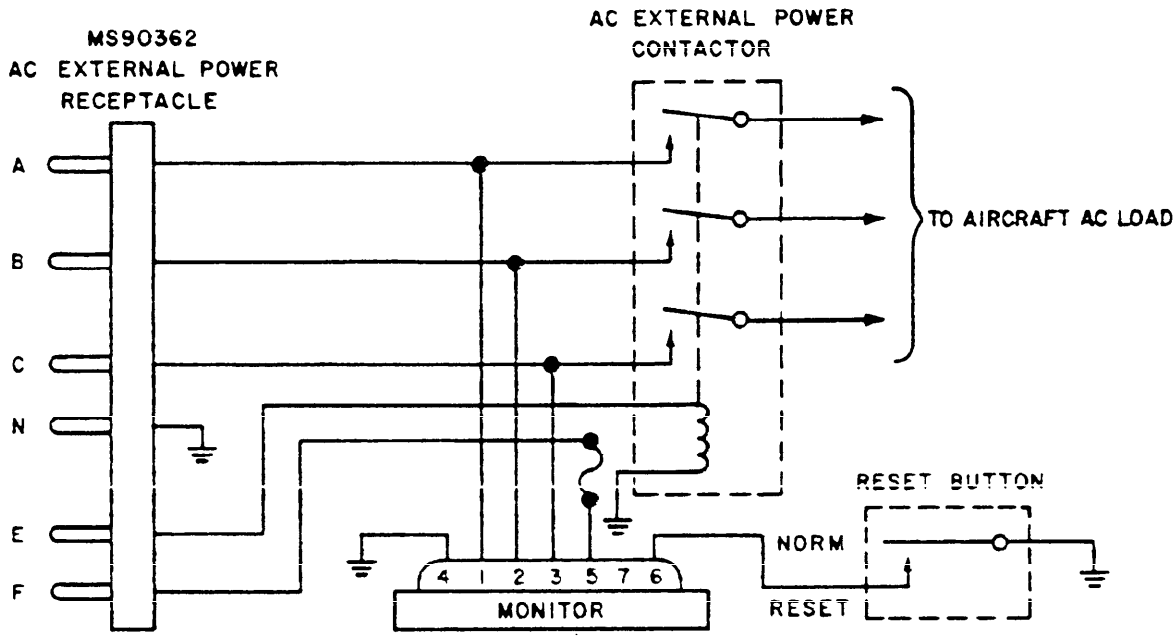

FIGURE 9. Installation circuit for M24021-2 monitor.

Downloaded from http://www.everyspec.com

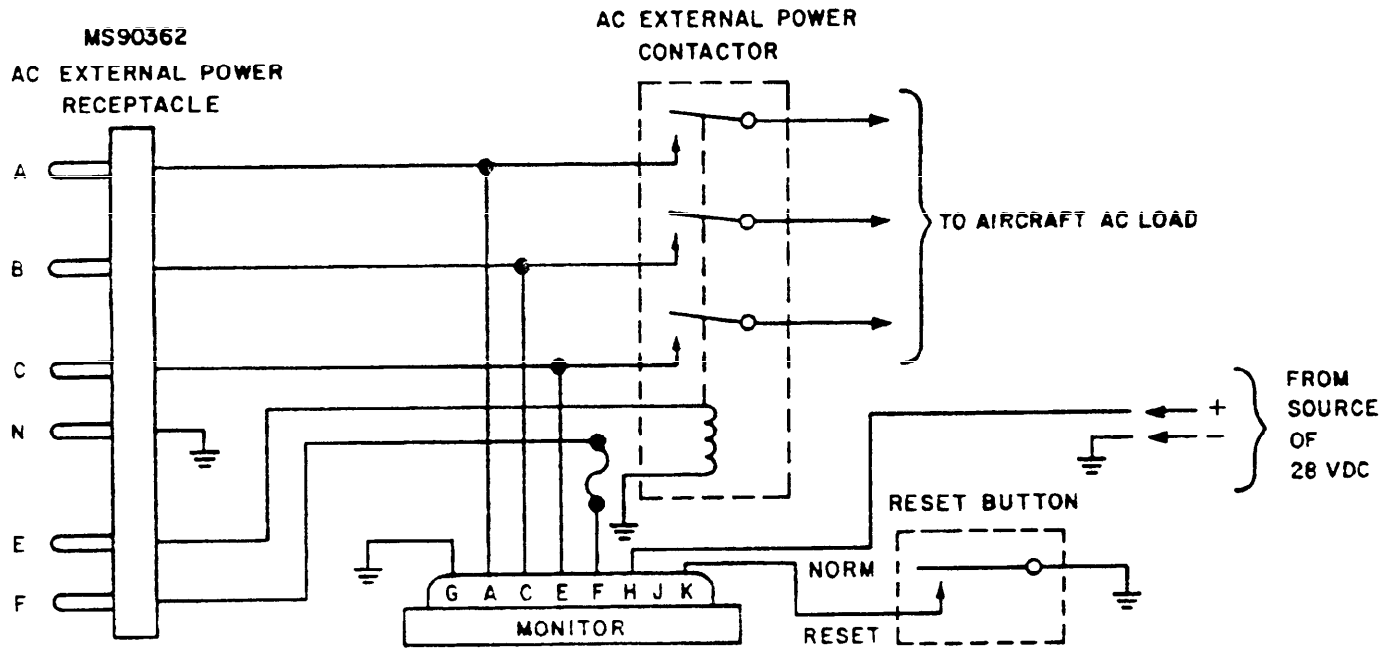

Circuit using DC-operated contactor

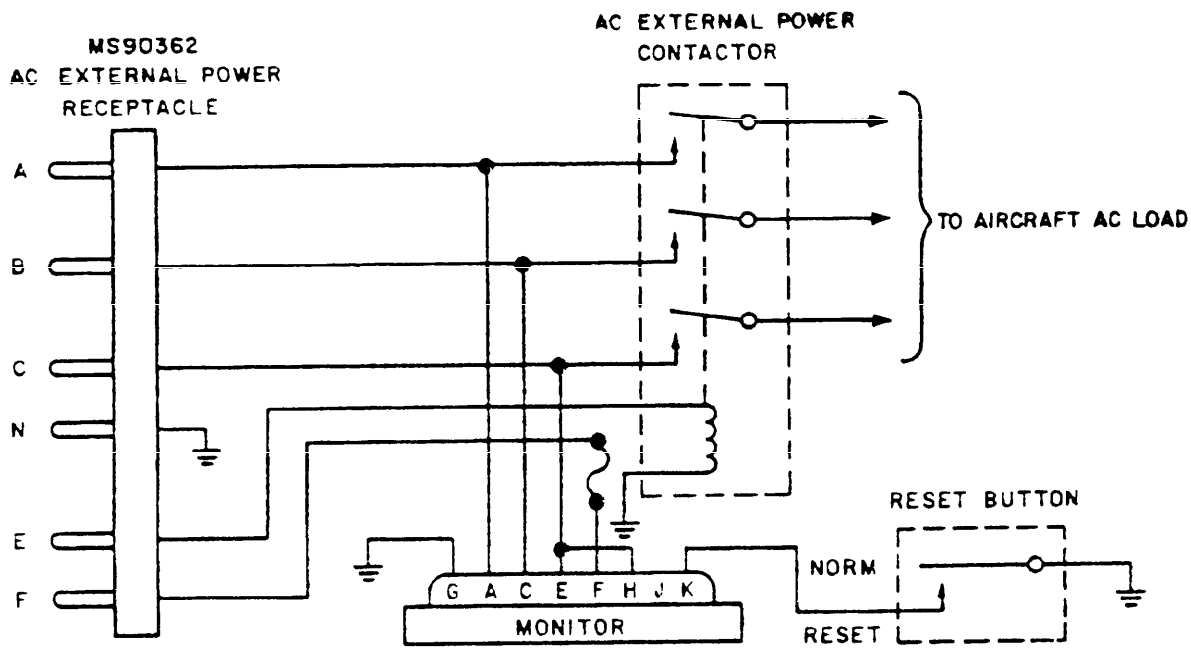

Circuit using AC-operated contactor

FIGURE 10. Installation circuits for M24021-4 monitor.

Downloaded from http://www.everyspec.com

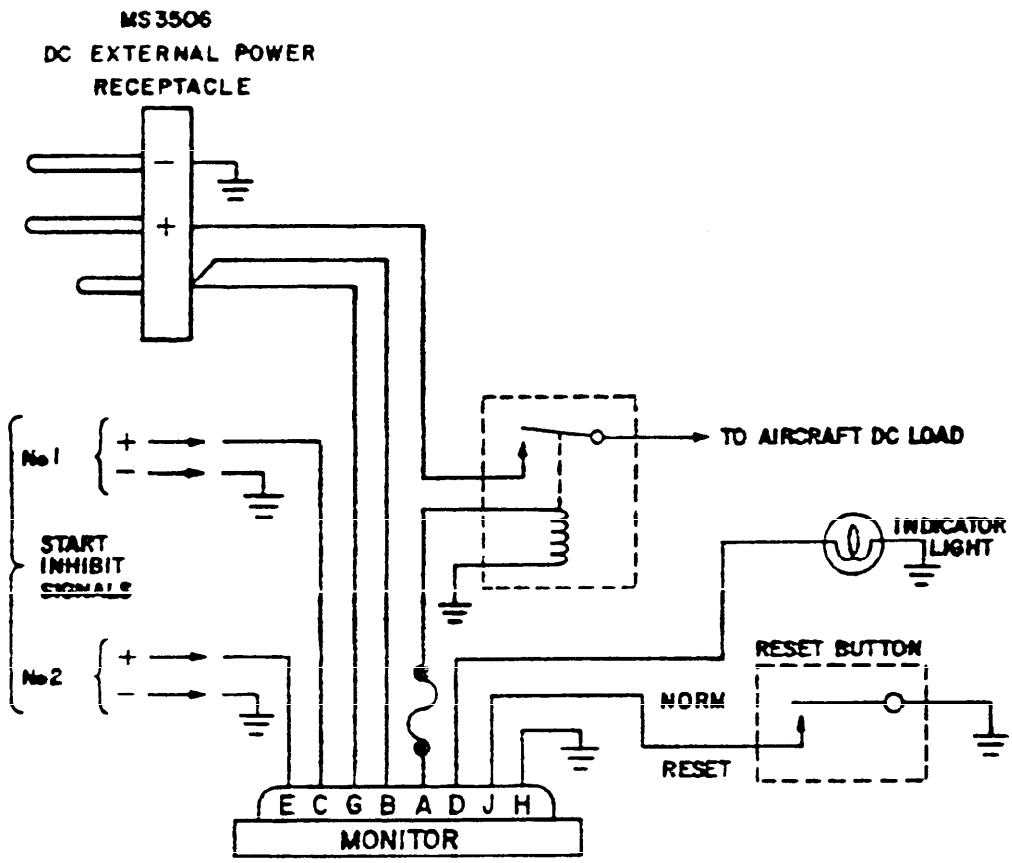

FIGURE 11. Installation circuit for M24021-6 monitor.

Downloaded from http://www.everyspec.com

Downloaded from http://www.everyspec.com

INSTRUCTIONS: In a continuing effort to make our standardization documents better, the DoD provides this form for use in submitting comments and suggestions for improvements. All users of military standardization documents are invited to provide suggestions. This form may be detached, folded along the lines indicated, taped along the loose edge *(DO NOT STAPLE)*, and mailed. In block 5, be as specific as possible about particular problem areas such as wording which required interpretation, was too rigid, restrictive, loose, ambiguous, or was incompatible, and give proposed wording changes which would alleviate the problems. Enter in block 6 any remarks not related to a specific paragraph of the document. If block 7 is filled out, an acknowledgement will be mailed to you within 30 days to let you know that your comments were received and are being considered.

NOTE This form may not be used to request copies of documents, nor to request waivers, deviations, or clarification of specification requirements on current contracts. Comments submitted on this form do not constitute or imply authorization to waive any portion of the referenced document(s) or to amend contractual requirements.

(Fold along this line)

(Fold along this line)

DEPARTMENT OF THE NAVY
Commanding Officer
Naval Air Engineering Center
Engineering Specifications and Standards Department
(ESSD), Code 93
Lakehurst, NJ 08733

OFFICIAL BUSINESS
PENALTY FOR PRIVATE USE $300

NO POSTAGE NECESSARY IF MAILED IN THE UNITED STATES

BUSINESS REPLY MAIL
FIRST CLASS PERMIT NO. 12503 WASHINGTON, D.C.

POSTAGE WILL BE PAID BY THE DEPARTMENT OF THE NAVY

Commanding Officer
Naval Air Engineering Center
Engineering Specifications and Standards Dept.
(ESSD), Code 93
Lakehurst, NJ 08733

Downloaded from http://www.everyspec.com

(TO DETACH THIS FORM, CUT ALONG THIS LINE)

STANDARDIZATION DOCUMENT IMPROVEMENT PROPOSAL

(See Instructions - Reverse Side)

1. DOCUMENT NUMBER
MIL-E-24021J

2. DOCUMENT TITLE
Electric Power Monitors, External, Aircraft

3a. NAME OF SUBMITTING ORGANIZATION

b. ADDRESS *(Street, City, State, ZIP Code)*

4. TYPE OF ORGANIZATION *(Mark one)*

- [ ] VENDOR
- [ ] USER
- [ ] MANUFACTURER
- [ ] OTHER *(Specify)* _____

5. PROBLEM AREAS

a. Paragraph Number and Wording

b. Recommended Wording

c. Reason/Rationale for Recommendation

6. REMARKS

7a. NAME OF SUBMITTER *(Last, First, MI)* – Optional

b. WORK TELEPHONE NUMBER *(Include Area Code)* – Optional

c. MAILING ADDRESS *(Street, City, State, ZIP Code)* – Optional

8. DATE OF SUBMISSION *(YYMMDD)*

DD FORM 82 MAR 1426

PREVIOUS EDITION IS OBSOLETE.