Downloaded from http://www.everyspec.com

INCH-POUND
MIL-DTL-9129/9A
26 March 2009
SUPERSEDING
MIL-D-9129/9
30 September 1986

DETAIL SPECIFICATION SHEET

HOLDERS, DISCHARGER, ELECTROSTATIC

This specification is approved for use by all Departments and Agencies of the Department of Defense.

The requirements for acquiring the product described herein shall consist of this specification sheet and MIL-DTL-9129.

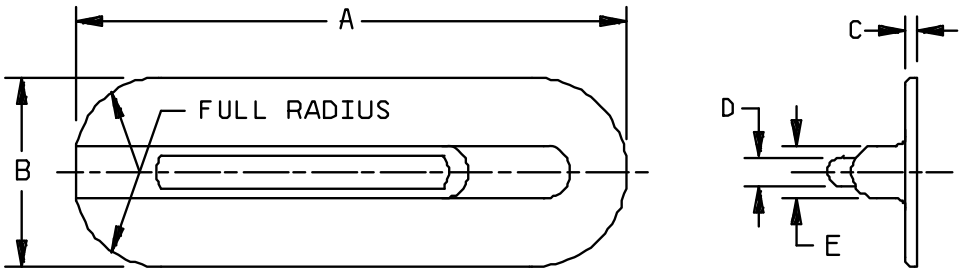

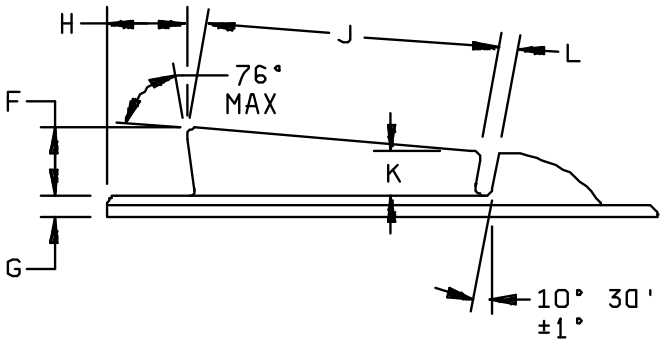

Ltr	Inches		mm	
	Min	Max	Min	Max
A	---	3.20	---	81.3
B	1.05	1.15	26.7	29.2
C	---	.065	---	1.65
D	.175	.195	4.45	4.95
E	---	.31	---	7.9
F	.365	.425	9.27	10.80
G	.115	.135	2.92	3.43
H	.45	---	11.4	---
J	1.670	1.690	47.50	42.93
K	---	.260	---	6.60
L	.105	.115	2.67	2.92

NOTES:
1. Dimensions are in inches.
2. Metric equivalents are given for general information only.
3. Unless otherwise specified, tolerances are ± .02 (0.51 mm) for two place decimals and ± .010 (0.25 mm) for three place decimals.

FIGURE 1. Dimensions and configurations for PIN M9129/09-01.

Downloaded from http://www.everyspec.com

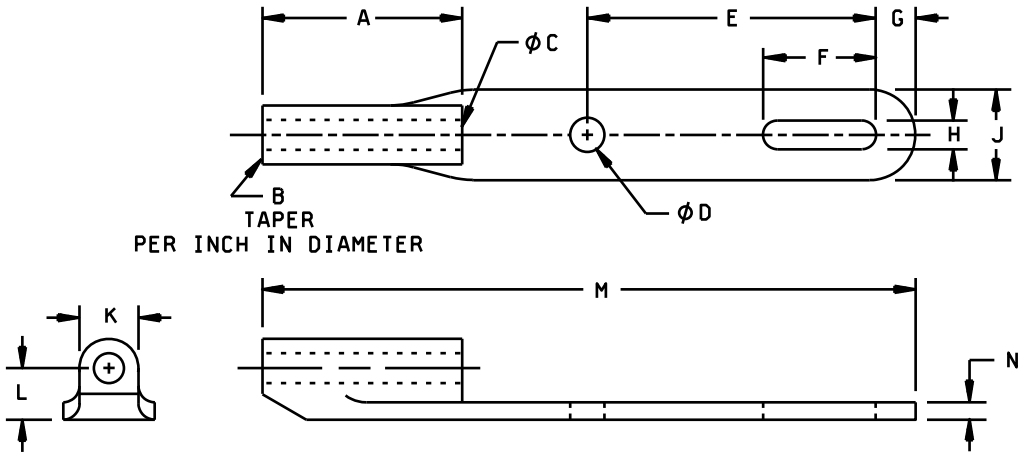

Ltr	Inches		mm	
	Min	Max	Min	Max
A	1.00	1.20	25.4	30.5
B	.0198	.0218	0.50	0.55
C	.163	.166	4.14	4.22
D	.179	.199	4.55	5.05
E	1.57	1.61	39.9	40.9
F	.60	.64	15.2	16.3
G	.20	.24	5.1	6.1
H	.150	.170	3.81	4.32
J	.48	.52	12.2	13.2
K	---	.325	---	8.25
L	.274	.294	6.96	7.47
M	---	3.60	---	91.4
N	.085	.108	2.16	2.74

NOTES:

1. Dimensions are in inches.
2. Metric equivalents are given for general information only.
3. Unless otherwise specified, tolerances are ± .02 (0.51 mm) for two places decimals and ± .010 (0.25 mm) for three place decimals.

FIGURE 2. Dimensions and configuration for PIN M9129/09-02.

Downloaded from http://www.everyspec.com

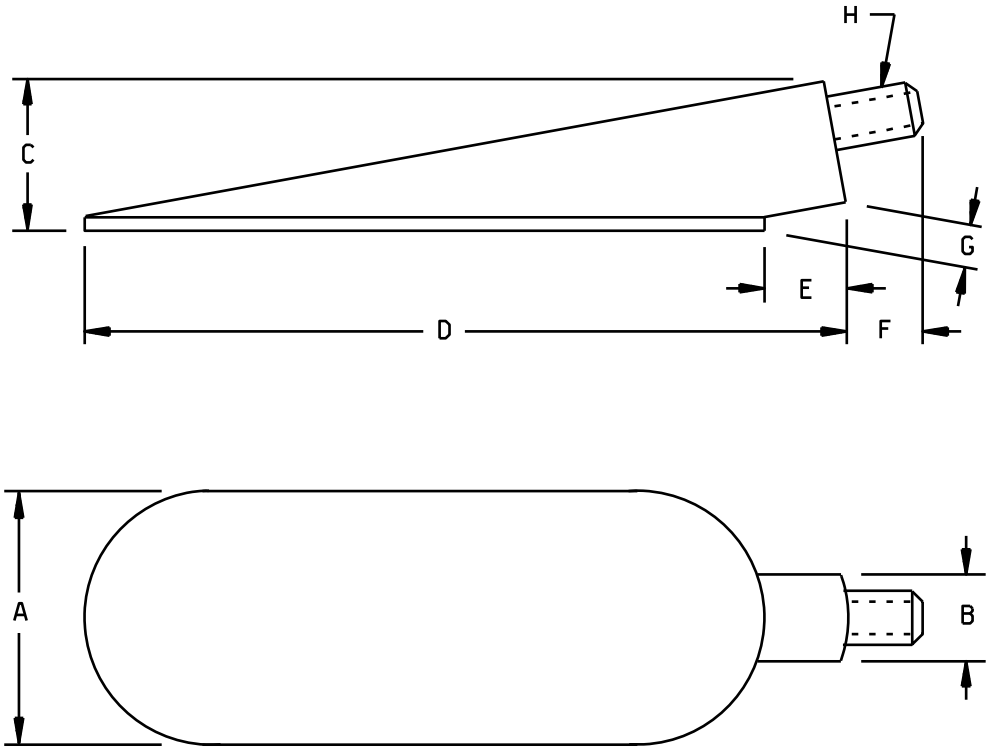

Ltr	Inches		mm	
	Min	Max	Min	Max
A	---	1.17	---	29.7
B	---	.40	---	10.2
C	---	.70	---	17.8
D	---	3.52	---	89.4
E	---	.380	---	9.65
F	.32	.38	8.1	9.6
G	.20	---	5.1	---
H	.23	.27	5.8	6.9

NOTES:

1. Dimensions are in inches.
2. Metric equivalents are given for general information only.
3. Unless otherwise specified, tolerances are ± .02 (0.51 mm) for two places decimals and ± .010 (0.25 mm) for three place decimals.

FIGURE 3. Dimensions and configuration for PIN M9129/09-03.

Downloaded from http://www.everyspec.com

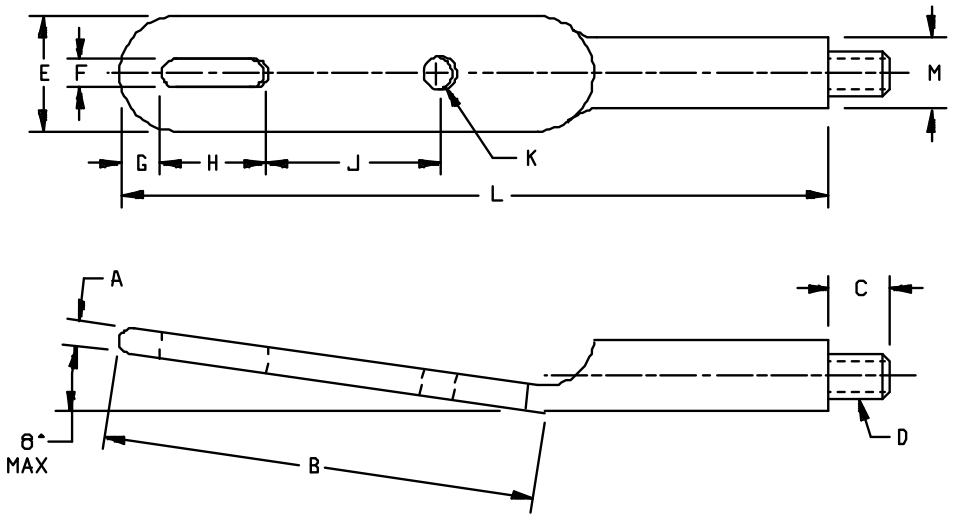

Ltr	Inches		mm	
	Min	Max	Min	Max
A	---	.140	---	3.56
B	---	2.4	---	60.9
C	.32	.38	8.1	9.6
D	.23	.27	5.8	6.9
E	---	.65	---	16.5
F	.150	.170	3.81	4.32
G	.20	.24	5.1	6.1
H	.60	.64	15.2	16.3
J	.95	.99	24.1	25.1
K	.179	.199	4.55	5.05
L	---	4.0	---	102
M	---	.40	---	10.2

NOTES:

1. Dimensions are in inches.
2. Metric equivalents are given for general information only.
3. Unless otherwise specified, tolerances are ± .02 (0.51 mm) for two places decimals and ± .010 (0.25 mm) for three place decimals.

FIGURE 4. Dimensions and configuration for PIN M9129/09-04.

Downloaded from http://www.everyspec.com

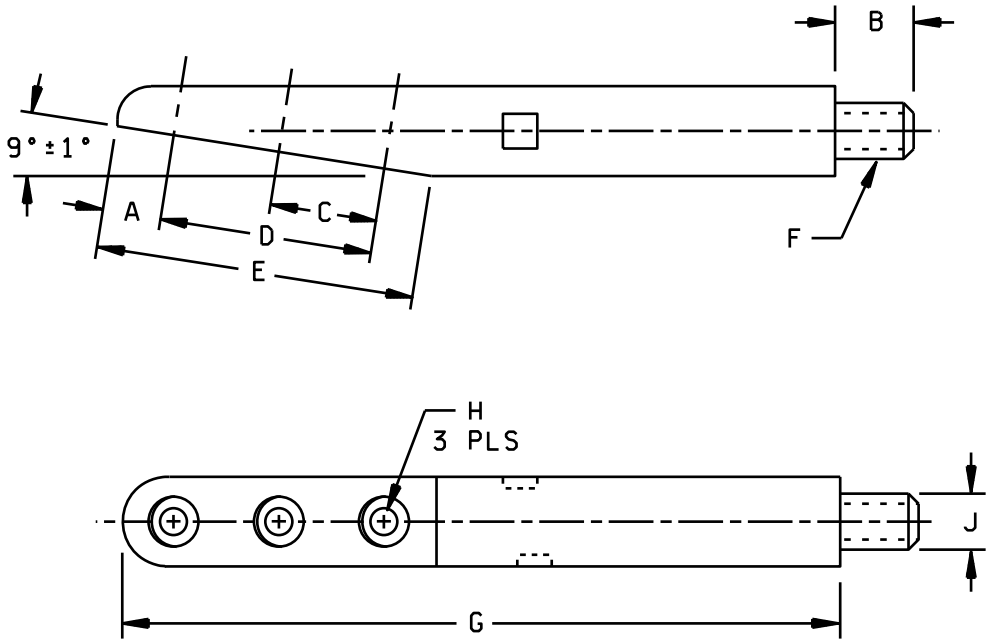

Ltr	Inches		mm	
	Min	Max	Min	Max
A	.25	---	6.3	---
B	.32	.38	8.1	9.6
C	.45	.49	11.4	12.4
D	.92	.96	23.4	24.4
E	1.40	---	35.6	---
F	.23	.27	5.8	6.9
G	---	3.20	---	81.3
H 1/	.120	.225	3.05	5.72
J	---	.42	---	10.7

1/ Countersunk

NOTES:

1. Dimensions are in inches.
2. Metric equivalents are given for general information only.
3. Unless otherwise specified, tolerances are ± .02 (0.51 mm) for two places decimals and ± .010 (0.25 mm) for three place decimals.

FIGURE 5. Dimensions and configuration for PIN M9129/09-05.

Downloaded from http://www.everyspec.com

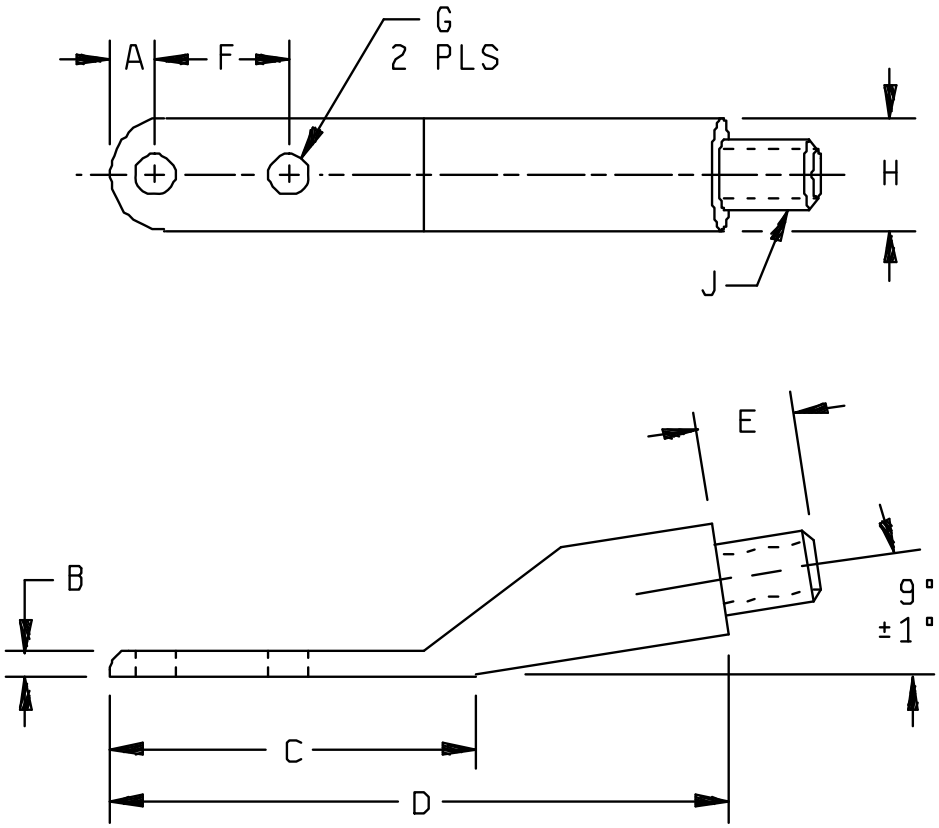

Ltr	Inches		mm	
	Min	Max	Min	Max
A	.160	---	4.06	---
B	.09	---	2.3	---
C	---	1.3	---	33
D	2.2	---	56	---
E	.32	.38	8.1	9.6
F	.465	.485	11.81	12.32
G	.134	.154	3.40	3.91
H	---	.40	---	10.2
J	.23	.27	5.8	6.9

NOTES:

1. Dimensions are in inches.
2. Metric equivalents are given for general information only.
3. Unless otherwise specified, tolerances are ± .02 (0.51 mm) for two places decimals and ± .010 (0.25 mm) for three place decimals.

FIGURE 6. Dimensions and configuration for PIN M9129/09-06.

Downloaded from http://www.everyspec.com

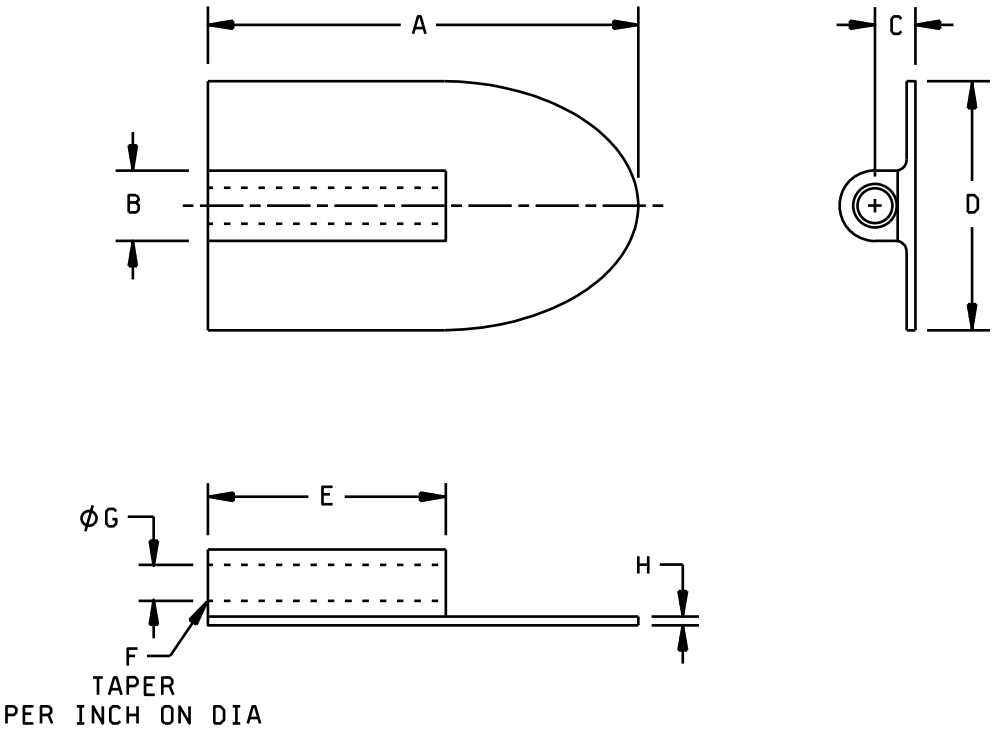

Ltr	Inches		mm	
	Min	Max	Min	Max
A	---	1.99	---	50.5
B	---	3.25	---	82.6
C	.177	.197	4.50	5.00
D	---	1.15	---	29.2
E	1.08	1.12	27.4	28.4
F	.0198	.0218	0.503	0.554
G	.1635	.1660	4.153	4.216
H	.02	.06	0.5	1.5

NOTES:

1. Dimensions are in inches.
2. Metric equivalents are given for general information only.
3. Unless otherwise specified, tolerances are ± .02 (0.51 mm) for two places decimals and ± .010 (0.25 mm) for three place decimals.

FIGURE 7. Dimensions and configuration for PIN M9129/09-07.

Downloaded from http://www.everyspec.com

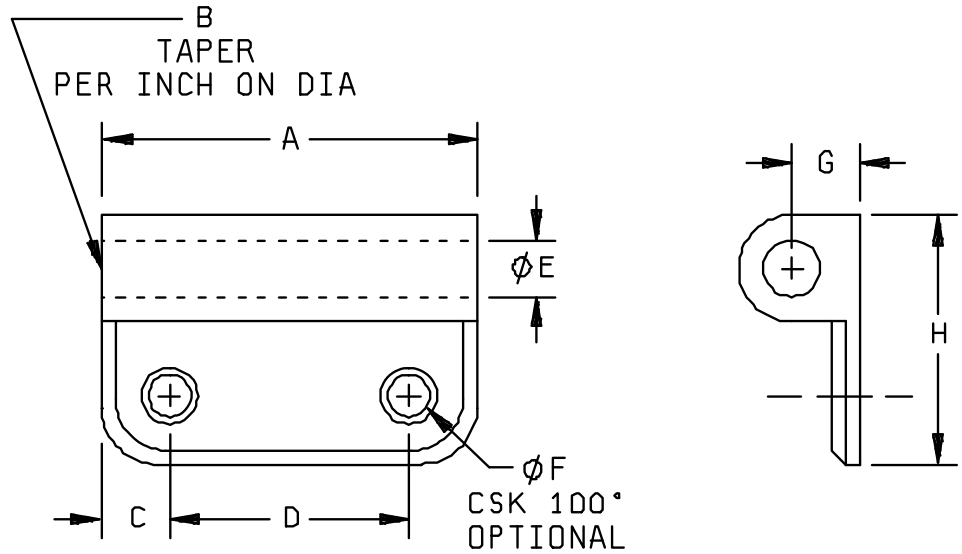

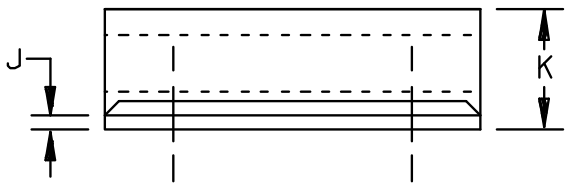

Ltr	Inches		mm	
	Min	Max	Min	Max
A	1.08	1.12	27.4	28.4
B	.0198	.0218	0.503	0.554
C	.18	.22	4.6	5.6
D	.68	.72	17.3	18.3
E	.1635	.1660	4.153	4.216
F	.115	.135	2.92	3.43
G	---	.197	---	5.00
H	---	.73	---	18.5
J	.04	---	1.0	---
K	---	.35	---	8.9

NOTES:

1. Dimensions are in inches.
2. Metric equivalents are given for general information only.
3. Unless otherwise specified, tolerances are ± .02 (0.51 mm) for two places decimals and ± .010 (0.25 mm) for three place decimals.

FIGURE 8. Dimensions and configuration for PIN M9129/09-08.

Downloaded from http://www.everyspec.com

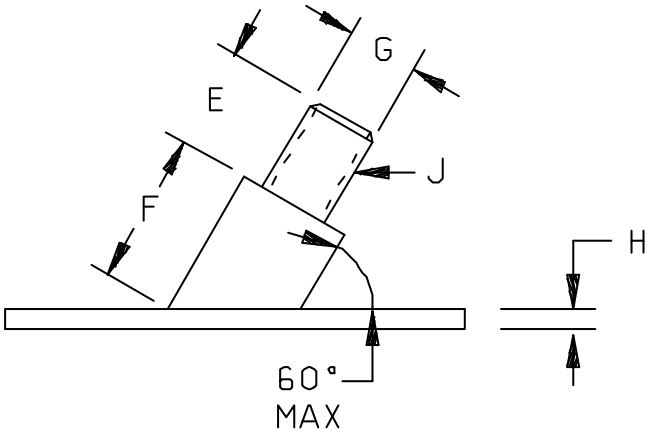

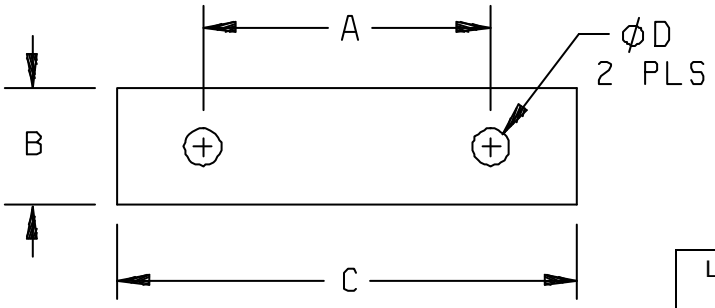

Ltr	Inches		mm	
	Min	Max	Min	Max
A	.98	1.02	24.9	25.9
B	---	.40	---	10.2
C	---	1.6	---	40.6
D	.118	.138	3.00	3.51
E	.32	.38	8.1	9.7
F	.53	---	13.5	---
G	---	.40	---	10.2
H	---	.072	---	1.83
J	.23	.27	5.8	6.9

NOTES:

1. Dimensions are in inches.
2. Metric equivalents are given for general information only.
3. Unless otherwise specified, tolerances are ± .02 (0.51 mm) for two places decimals and ± .010 (0.25 mm) for three place decimals.

FIGURE 9. Dimensions and configuration for PIN M9129/09-09.

Downloaded from http://www.everyspec.com

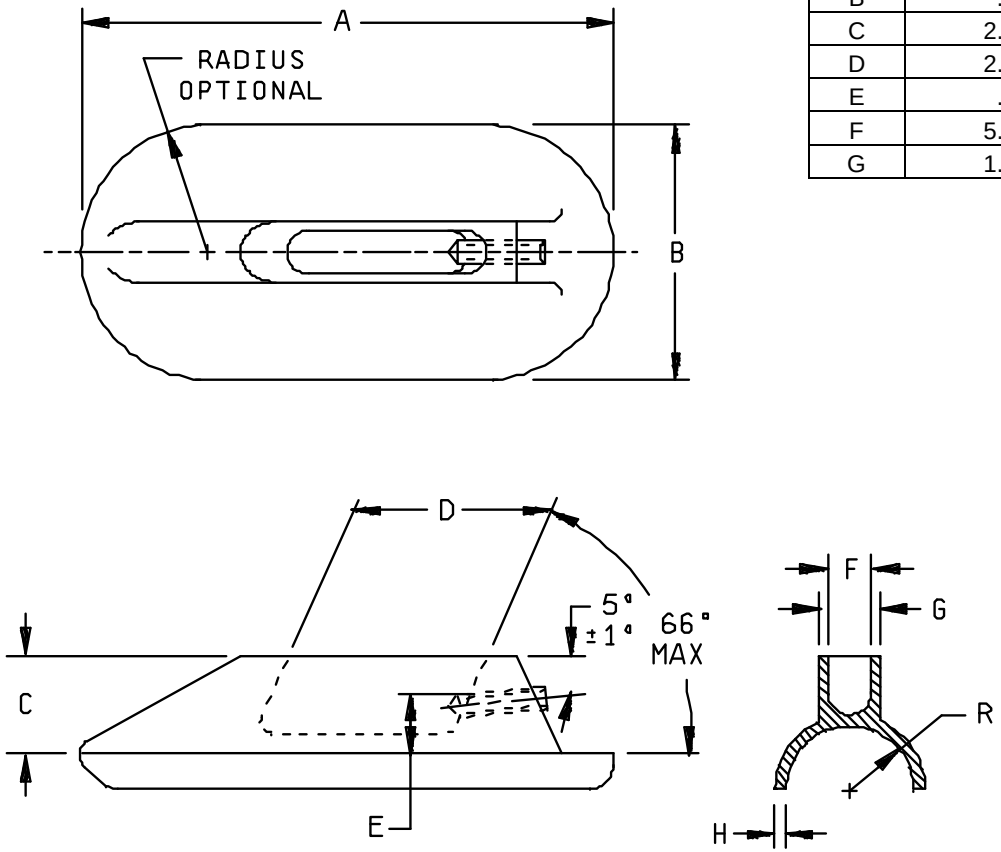

Style	Dimension R	Style	Dimension R
A	.50	H	2.81 ± .31
B	.38	J	4.16 ± .56
C	2.50	K	1.31 ± .06
D	2.18	L	3.46 ± .46
E	.689	M	.7 ± .1
F	5.00	N	.53 ± .06
G	1.51 ± .1	P	7.0 ±2.0

FIGURE 10. Dimensions and configuration for PIN M9129/09-10.

Downloaded from http://www.everyspec.com

Ltr	Inches		mm	
	Min	Max	Min	Max
A	---	2.3	---	58
B	---	1.1	---	28
C	---	.45	---	11.4
D	.83	.89	21.1	22.6
E	.237	.277	6.02	7.03
F	.188	---	4.77	---
G	.26	---	6.6	---
H	.03	.08	0.8	2.0

NOTES:

1. Dimensions are in inches.
2. Metric equivalents are given for general information only.
3. Unless otherwise specified, tolerances are ± .02 (0.51 mm) for two places decimals and ± .010 (0.25 mm) for three place decimals.

FIGURE 10. Dimensions and configuration for PIN M9129/09-10 - Continued.

Downloaded from http://www.everyspec.com

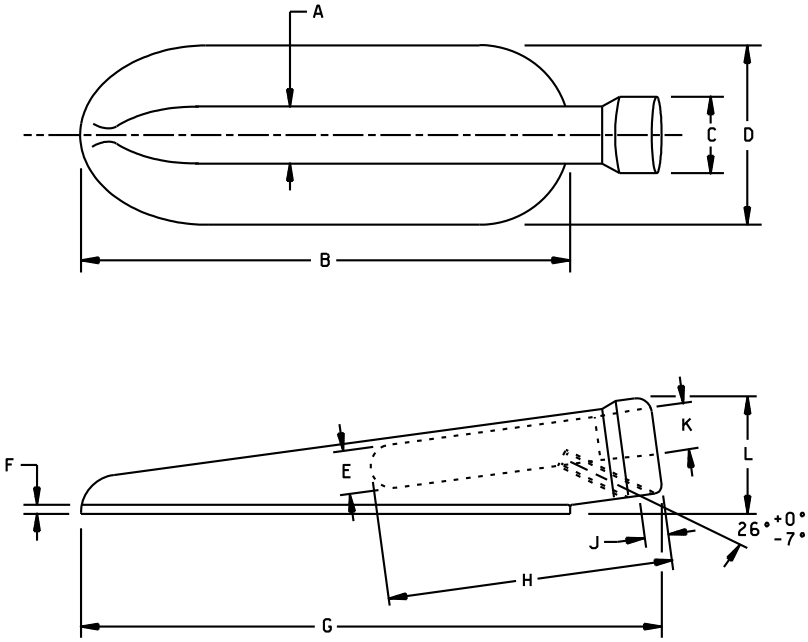

Ltr	Inches		mm	
	Min	Max	Min	Max
A	.375	---	9.52	---
B	3.18	3.22	80.8	81.8
C	.48	.52	12.2	13.2
D	1.145	1.205	29.08	30.61
E	.280	.295	7.11	7.49
F	.060	---	1.52	---
G	3.78	3.82	96.0	97.0
H	1.87	---	47.5	---
J	.175	---	4.44	---
K	.31	---	7.9	---
L	---	.77	---	19.6

NOTES:

1. Dimensions are in inches.
2. Metric equivalents are given for general information only.
3. Unless otherwise specified, tolerances are ± .02 (0.51 mm) for two places decimals and ± .010 (0.25 mm) for three place decimals.

FIGURE 11. Dimensions and configuration for PIN M9129/09-11.

Downloaded from http://www.everyspec.com

Part or Identifying Number (PIN): M9129/09- (dash number from table I and reference to associated figure herein).

TABLE I. PINs.

M9129/09-	Figure 2/
01	1
02	2
03	3
04	4
05	5
06	6
07	7
08	8
09	9
10 1/	10
11	11

1/ Dash 10 will include a suffix to represent the radius shown on figure 10. Each radius is identified by a style letter. Example of the part number: M9129/09-10B.

2/ For applications requiring lightning survivability, only holders 1, 3, 7, 10, and 11 shall be used with the appropriate P-type dischargers.

VERIFICATION:

First Article: First article testing for holders shall include two samples, each being sequentially tested to vibration, lightning transfer, and salt spray with a mating discharger.

Changes from previous issue. Marginal notations are not used in this revision to identify changes with respect to the previous issue due to the extent of the changes.

Downloaded from http://www.everyspec.com

Custodians:
Army - CR
Navy - AS
Air Force - 85
DLA - CC

Review activities:
Army - CE, MI
Navy - MC
Air Force - 19, 99

Preparing activity:
DLA - CC

(Project 5920-2009-003)

NOTE: The activities listed above were interested in this document as of the date of this document. Since organizations and responsibilities can change, you should verify the currency of the information above using the ASSIST Online database at http://assist.daps.dla.mil.