INCH-POUND

MIL-DTL-85052/1C
30 March 2005
SUPERSEDING
MIL-C-85052/1B
30 MAY 1984

DETAIL SPECIFICATION SHEET

CLAMP, LOOP, TUBE-17-7 PH CRES, 275 °F, FUEL AND PETROLEUM BASED HYDRAULIC FLUID RESISTANT

This specification is approved for use by all Departments and Agencies of the Department of Defense. The requirements for acquiring the product described herein shall consist of this specification sheet and MIL-DTL-85052.

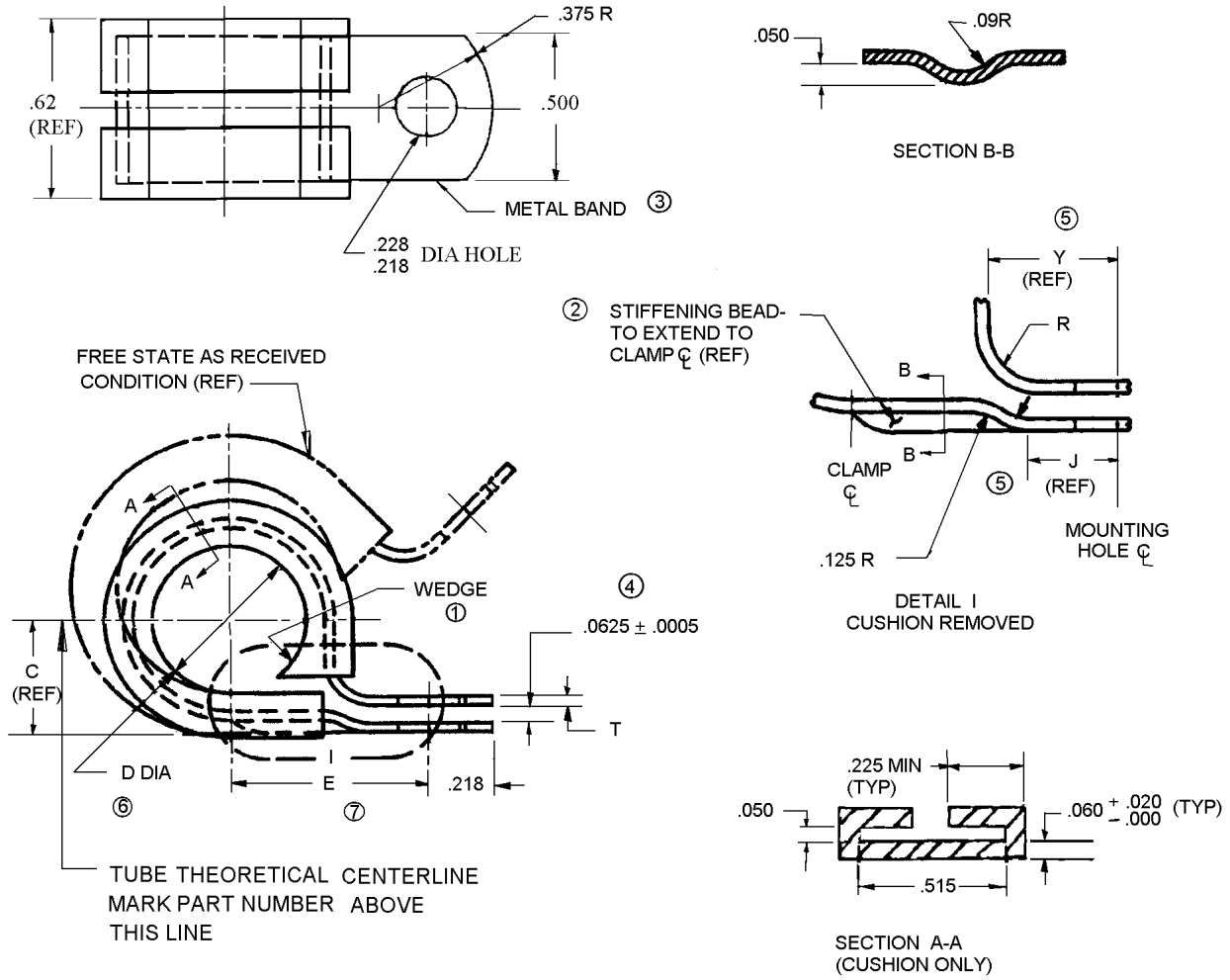

FIGURE 1. Clamp design and construction.

AMSC N/A FSC 5340

NOTES:

① Wedge shall be required on size -6 and larger. The wedge shall be molded as an integral part of the cushion and contoured to fit D diameter.

② Stiffening bead shall be required on size -4 and larger. All radii on the stiffening bead shall be smooth and blended. No sharp tool marks are allowed.

③ Metal band shall have all burrs, sharp edges, and scale removed.

④ Wedge shall touch cushion on lower foot with clamp installed on mandrel without spacer.

⑤ Reference dimensions Y and J are provided to gain maximum support for the lower foot by closely fitting the upper foot bend radius to the stiffening bead blend radius when closed against each other.

⑥ Diameter D is the nominal diameter for which a clamp size is intended for use. Diameter D shall be verified by the diametral retention test specified in the general specification (see 4.4.4.1).

⑦ Dimension E shall be measured with the clamp installed on a mandrel of D diameter ± .001, and .0625 ± .0005 spacer between the upper and lower foot as shown.

8. Unless otherwise specified, dimensions are in inches, tolerances ± .03 for two decimals and ± .010 for three decimals.

Table I. Clamp dimensions. 8/

Dash No.	C (Ref)	D 6/ Dia	E 7/ ± .032	J 5/ (Ref)	R ± .010	T	Y 5/ (Ref)
2	.192	.125	.468	-	.090	.020 ± .002	.325
3	.224	.188	.499				
4	.255	.250	.530	.235			
5	.286	.312	.561				
6	.318	.375	.592				
7	.349	.438	.624				
8	.380	.500	.655				
9	.423	.562	.741	.256	.125	.032 ± .002	.368
10	.454	.625	.772				
11	.486	.683	.804				
12	.517	.750	.835				
13	.548	.812	.866				
14	.580	.875	.898				

Table I. Clamp dimensions - Continued. 8/

Dash No.	C (Ref)	D 6/ Dia	E 7/ ± .032	J 5/ (Ref)	R ± .010	T	Y 5/ (Ref)
15	.611	.938	.929	.256	.125	.032 ± .002	.368
16	.642	1.000	.960				
17	.681	1.062	1.001	.262		.040 ± .003	.370
18	.712	1.125	1.032				
19	.744	1.188	1.064				
20	.775	1.250	1.095				
21	.806	1.312	1.126				
22	.838	1.375	1.158				
23	.869	1.438	1.189				
24	.900	1.500	1.220				

5/ See figure 1, note ⑤
6/ See figure 1, note ⑥
7/ See figure 1, note ⑦
8/ See figure 1, note 8

REQUIREMENTS:

MARKING

Band. The complete standard part number and manufacture's name, trademark, or Contractor And Government Entity (CAGE) code shall be impression stamped on the band in an area not covered by the cushion. All marking shall be above tube theoretical centerline (see figure 1). Clamp bands of - 2, -3, - 4 sizes may be marked with the manufacturer's identification, the size, and the specification sheet number according to space limitations.

Cushion. None

MATERIALS

Metal band. 17-7PH corrosion resistant steel in accordance with SAE-AMS5528 or SAE-AMS5529, annealed, stress relieved, and heat-treated to TH1100 condition in accordance with SAE-AMS-H-6875 after forming.

Cushion. Nitrile Butadiene rubber, 65-75 durometer, color yellow as specified in the general specification with additional requirements specified in the specification sheet.

FINISH

Metal band. Passivate in accordance with SAE-AMS-QQ-P-35, Type II

Cushion. None

CUSHION REQUIREMENTS:

1. Physical properties. Physical properties shall be as specified in table II. Unless otherwise specified, results are an average of 5 specimens and tolerance on temperature ± 5 °F.

2. Ozone resistance. Required per MIL-DTL-85052.

3. Compression set. See MIL-DTL-85052.
   - Air age at 212 °F.
   - Not to exceed 55 percent average of 3 specimens.

4. Flammability. See MIL-DTL-85052.
   - Specimens -16 size clamp assemblies unbent until flat.
   - Vertical burn test.

Table II. Physical properties.

Test	Test Method	Required Original Properties	Allowable change from actual original properties after:		
			Fuel Immersion MIL-DTL-5624, JP-4, 163 hrs at +100 °F 1/	Hydraulic Fluid Immersion MIL-PRF-5606 70 hrs at +156 °F 1/	Heat Aging 70 hrs at +275 °F
Hardness durometer "A"	ASTM-D2240	65-75	- 20 Max	- 15 Max	+ 10 Max
Tensile strength (PSI)	ASTM-D412	2000 Min	- 30 % Max	- 10 % Max	- 40% Max
Elongation (%)	ASTM-D412	500 Min	- 10 % Max	- 10 % Max	- 75% Max
Tear strength (PPI)	ASTM-D624 DIE "B"	300 Min	- 35 % Max	- 10 % Max	- 40% Max
Specific gravity	-	As measured	-	-	± 2%
Volume change (%) 1.After conditioning	ASTM-D471 -	-	+15% Max	+10% Max	-10 % Max
2. After 24 hrs air dry	-	-	+10% Max	+10% Max	-

1/ Unless otherwise specified, property measurements shall be performed immediately after removal from immersion bath.

PART NUMBER:

Part number shall consist of the following (in sequence).

1. The letter M.
2. The general specification number.
3. A slash and a slash number of this specification sheet.
4. A dash and the appropriate size dash number from table I.

Example: M85052/1-6

INTENDED USE:

These clamps are intended for use as follows:

Temperature range: - 65 to + 275 ^{o}F (for higher temperature rated clamps, see MIL-DTL-85052/3).

Systems:

1. All aromatic fuel system applications requiring a high degree of cushion exposure to system fluid.

2. All fluid and electrical systems on aircraft and aerospace vehicles using petroleum based hydraulic systems.

Vibration rating. Clamps are used at low, medium, and high vibration areas depending on mounting methods. The recommended mounting methods for various vibration areas are specified in 6.4 of the general specification.

Changes from previous issue. Marginal notations are not used in this revision to identify changes with respect to the previous issue due to the extent of the changes.

Custodians:
Army-AV
Navy-AS
Air Force-99

Preparing activity:
Navy-AS

(Project 5330-2733)

Review activities
Navy-MC, SA, SH
Air Force-11, 71
DLA-IS

Industry Association:
SAE-G3E

NOTE: The activities listed above were interested in this document as of the date of this document. Since organizations and responsibilities can change, you should verify the currency of the information above using the ASSIST Online database at http://assist.daps.dla.mil.