Downloaded from http://www.everyspec.com

INCH-POUND

MIL-DTL-83833 (USAF)
1 July 1996

DETAIL SPECIFICATION

3000 GALLON AERIAL BULK FUEL DELIVERY SYSTEM BLADDER GENERAL SPECIFICATION FOR

This specification is approved for use by the Department of the Air Force and is available for use by all Departments and Agencies of the Department of Defense.

1. SCOPE

1.1 Scope. This specification covers the general requirements and tests for a 3000 Gallon Aerial Bulk Fuel Delivery System (ABFDS) Bladder, used with the C-130 and C-141 aircraft.

2. APPLICABLE DOCUMENTS

2.1 General. The documents listed in this section are specified in sections 3 and 4 of this specification. This section does not include documents cited in other sections of this specification or recommended for additional information or as examples. While every effort has been made to ensure the completeness of this list, document users are cautioned that they must meet all specified requirements in documents cited in sections 3 and 4 of this specification, whether or not they are listed.

2.2 Government documents.

2.2.1 Specifications, standards, and handbooks. The following specifications, standards, and handbooks form a part of this document to the extend specified herein. Unless otherwise specified, the issues of these documents are those listed in the issue of the Department of Defense Index of Specifications and Standards (DODISS) and supplement thereto, cited in the solicitation (see 6.2).

SPECIFICATIONS

FEDERAL

VV-F-800 - Fuel Oil, Diesel

Beneficial comments (recommendations, additions, deletions) and any pertinent data which may be of use in improving this document should be addressed to: Engineering Department, SA-ALC/TILDD, Kelly AFB, TX 78241-5000, by using the self-addressed Standardization Document Improvement Proposal (DD Form 1426) appearing at the end of this document or by letter.

AMSC N/A FSC 5430

DISTRIBUTION STATEMENT A. Approved for public release; distribution is unlimited.

Downloaded from http://www.everyspec.com

STANDARDS

DEPARTMENT OF DEFENSE

MIL-STD-130	Identification Marking of U. S. Military Property
MIL-STD-810	Environmental Test Methods and Engineering Guidelines
MIL-STD-1791	Designing for Internal Aerial Delivery in Fixed Wing Aircraft

(Unless otherwise indicated, copies of the above specifications, standards, and handbooks are available from the Standardization Document Order Desk, 700 Robbins Avenue, Building 4D, Philadelphia, PA 19111-5094.)

2.2 Non-Government publications. The following document(s) form a part of this document to the extent specified herein. Unless otherwise specified, the issues of the documents which are DoD adopted are those listed in the issue of the DODISS cited in the solicitation. Unless otherwise specified, the issues of documents not listed in the DODISS are the issues of the documents cited in the solicitation (see 6.2).

AMERICAN NATIONAL STANDARDS INSTITUTE (ANSI)

H35.1 -	Alloy and Temper Designation Systems for Aluminum

(Application for copies should be addressed to the American National Standards Institute (ANSI), 11 West 42nd Street, New York, NY 10036)

AMERICAN SOCIETY FOR TESTING AND MATERIALS (ASTM)

A276 -	Standard Specification for Stainless Steel Bars and Shapes
B85 -	Standard Specification for Aluminum Alloy Die Castings
B221 -	Standard Specification for Aluminum and Aluminum Alloy Extended Bars, Rods, Wire, Shapes and Tubes.
D1149 -	Standard Test Method for Rubber Deterioration Surface Ozone Cracking in a Chamber

(Application for copies should be addressed to the American Society for Testing and Materials (ASTM), 1916 Race Street, Philadelphia, PA 19103-1137.)

2.3 Order of precedence. In the event of a conflict between the text of this document and the references cited herein (except for related associated detail specifications, specification sheets, or MS standards), the text of this document takes precedence. Nothing in this document, however, supersedes applicable laws and regulations unless a specific exemption has been obtained.

3. REQUIREMENTS

3.1 First article inspection. When specified, (see 6.2), five (5) samples shall be subjected to first article inspection (see 6.3) in accordance with 4.3.

3.1.1 Sample selection plan. Prior to initial production, the contractor shall produce a Sample Selection Plan. The plan shall be designed for use in the quality conformance testing of Section 4 and

Downloaded from http://www.everyspec.com

shall provide the Government a method of selecting production seams, bonded fittings, coated fabric, and handle samples for destructive testing. The samples shall be cut from a production Bladder selected at random in accordance with Section 4. The test samples shall be provided in sufficient quantity for testing as specified in the Sample Selection Plan. The Sample Selection Plan shall be made available, upon request, to the contracting officer or Government representative on the site of the manufacturer.

3.1.2 Bladders for testing. Bladders selected as testing samples are in addition to the quantity required for delivery and shall remain the property of the contractor after completion of testing. All Bladders selected as samples for destructive testing must be completed samples.

3.1.3 Process data. Prior to the initial product, the contractor shall make available to the Government a description of the materials, documented work instructions, processing, and fabricating procedures which will be used by the contractor to assure that each production Bladder is a duplicate of the First Article Bladder. Changes of materials, components, design, procedures, or sources of supply from those initially selected shall be subjected to the approval of the Government.

3.2 Materials. The materials shall be as specified herein. However, when a definite material is not specified, a material shall be used which will enable the bladders to meet the performance requirements of this specification. Recovered materials shall be used to the maximum extent possible.

3.2.1 Material deterioration, prevention, and control. The Bladder shall be fabricated from compatible materials, inherently resistant or treated to provide protection against the various forms of deterioration that may be encountered in the operational and storage environments to which it may be exposed.

3.2.1.1 Dissimilar metals. Dissimilar Metals shall not be used in intimate contact with each other unless appropriately protected against galvanic corrosion.

3.2.1.2 Identification of materials and finishes. The contractor shall identify the specific material, material finish, or treatment for use with components and subcomponents, and shall make information available upon request to the Government.

3.2.2 Nylon cloth. The nylon cloth of the coated fabric shall be high tenacity and heat and light resistant. The nylon cloth shall be free from any imperfections affecting strength, coating adhesion, or coating thickness.

3.2.2.1 Weathering resistance. When tested as specified in 4.6, the nylon cloth shall have a retained breaking strength that is not less than 45% percent of its initial breaking strength warp and fill pounds minimum.

3.2.3 Coated fabric. The coated fabric shall be free from blisters, holidays or pinholes, and shall show no signs of coating delamination. The coated fabric shall withstand the effects of all environmental elements stated herein without damage or deterioration of performance requirements.

3.2.4 Coating compounds. Each and every compound used for the formulation of Acrylonitrile-Butadiene coatings shall be suitable for use with hydrocarbon fuels containing up to 40% percent aromatics. The coating compounds shall be resistant to fungus, weathering, ozone, hydrolytic attack, and temperatures up to 160° F.

Downloaded from http://www.everyspec.com

3.2.5 Fill/evacuate and vent nozzle material. Alloy and temper designations of wrought aluminum shall be in accordance with ANSI H35.1. Cast aluminum alloy shall conform to ASTM B85. Mold and sand castings are permissible.

3.2.6 Fill/evacuate and vent flange material. Alloy and temper designations of wrought aluminum shall be in accordance with ANSI H35.1. Cast aluminum alloy shall conform to ASTM B85. Mold and sand castings are permissible.

3.2.7 "D" rings material. The "D" ring material shall be equivalent to ASTM A276 Type 304L stainless steel rod, a low carbon alloy steel that allows welding.

3.3 Design and construction. The bladder shall be constructed in accordance with the design in figures 1 through 10. It is a built-up assembly of a number of constituent parts. These parts shall be joined by a leakproof bonding process which results in a homogeneous bladder equipped with twenty-eight (28) diagonal forward restraint straps, ten (10) lateral double "D" tie down rings, and eight (8) lift handles. The bladder shall also equipped with a vent assembly and fill/evacuate assembly. Internal to the bladder shall be three (3) rows of fluid flow restricters (synonymous with surge suppresser) which are tied to the internal bladder with nylon tie cord. The fiIl/evacuate assembly shall be fitted with a quick disconnect type pressure gauge.

3.3.1 Bladder and associated component design.

3.3.1.1 Basic bladder. The basic Bladder shall consist of six (6) Sections joined by an adhesive bonding process. The composition of the basic Bladder material shall be Acrylonitrile-Butadiene Rubber (NBR) and nylon fabric inter-layered to form a layered sandwich construction. The Bladder shall be 100 inches wide, 235 inches long, and approximately four (4) inches high when collapsed. The Bladder shall be 108 inches wide, 240 inches long, and approximately 36 inches high when filled to normal capacity.

3.3.1.2 Double "D" tie down rings. There shall be ten (10) double "D" tie down rings located on the upper Bladder external surface. The rings shall be attached to the Bladder's longitudinal center line by means of a coated NBR nylon strap which is bonded to a patch which, in turn, is bonded to the Bladder surface.

3.3.1.3 Lift handles. The Bladder shall be equipped with eight (8) lift handles located below the natural fold line of the Bladder. The handles shall be formed from two (2) individual straps of coated fabric wrapped together with a coating to enable shaping. The straps shall be bonded to a patch which is, in turn, bonded to the external Bladder surface.

3.3.1.4 Fill/evacuate assembly. The fill/evacuate assembly shall consist of two subassemblies which are mated with twenty (20) mounting bolts utilizing an O-ring for the sealing medium:

a. Subassembly No. 1. Subassembly 1 shall be the fill/evacuate nozzle which allows the attachment to the Bladder on one side and the cap sealing of the nozzle or hose attachment point on the other. The fill/evacuate nozzle shall contain a foot feature on the lower surface of the mounting plate. The foot feature shall consist of four (4) pedestals with a diagonal channel across two (2) of the four (4) pedestals. This feature enables the fill/evacuate nozzle to come into contact with the lower internal

Downloaded from http://www.everyspec.com

surface of the Bladder during fuel evacuation without allowing the lower surface to be sucked up into the suction port.

b. Subassembly No. 2. Subassembly 2 shall be the fill/evacuate flange which is made integral with the Bladder's surface by the use of adhesive bonding and coating to form a leakproof attachment.

3.3.1.5 Vent assembly. The vent assembly shall consist of two (2) subassemblies which are mated with ten (10) mounting bolts utilizing an 0-ring for the sealing medium:

a. Subassembly No. 1. Subassembly 1 shall be the vent nozzle which allows the attachment to the Bladder on one side and the cap sealing of the nozzle or the attachment of the anti-siphoning valve on the other.

b. Subassembly No. 2. Subassembly 2 shall be the vent flange which is made integral with the Bladder's surface by the use of adhesive bonding and coating to form a leakproof attachment.

3.3.1.6 Fluid flow restricters. The Bladder shall be equipped with three (3) internal rows of fluid flow restricters which control fuel surge. These restricters shall be trapezoidal sections of material which are a sandwich design with a stiffener to allow them to stand away from the Bladder's internal skin. There shall be twenty (20) Sections in each row arranged alternately to restrict flow in both longitudinal directions. Each section of material shall be tied to the Bladder's internal surface by means of an interlaced nylon cord utilizing eyelet protected openings for the lacing. The eyelets shall be present on the restricter sections and mating ribs of Bladder material which enable a continuous ring of restricters to be formed that completely encircle the interior of the Bladder laterally. This design produces a 26: 1 ratio of input velocity to output velocity by transmitting fluid surge to the bladder skin. An alternate design approach may be selected to enable new technology approaches with Government approval.

3.3.2 Bladder assembly construction.

3.3.2.1 Basic bladder. The Bladder shall be fabricated from single-ply coated fabric as specified herein. The configuration and dimensions of the Bladder and the location of ports, fittings, handles, and restraint system shall be as shown in Figure 1. For both Bladder interior and exterior, all coated fabric edges (seams, patches, and fabric flanges of fittings) shall be covered with coated fabric or coating compound used to fabricate the Bladder. Coated fabric panels may be spliced together to make up the length of the Bladder.

3.3.2.1.1 Seams. All Bladder seams between adjacent panels shall be constructed to prevent wicking through the nylon fabric.

3.3.2.2 Forward restraint harness. The Forward Restraint Harness shall be built into the forward section of the Bladder as shown in Figure 1. The harness shall consist of fourteen (14) each 24-foot straps which are bonded together and bonded to the Bladder. Each individual strap shall attach to a "D" Ring in fashion to enable the "D" to be an integral part of the forward restraint harness and bladder. This shall be accomplished on both ends of the strap. The underside straps are attached to a fixed length strap (not part of the Bladder) to the appropriate tie down clevis on the platform utilized for transportation. The topside straps are attached to an adjustable length strap (not part of the Bladder) to the appropriate tie down clevis on the platform. The straps shall be positioned on the Bladder such that

Downloaded from http://www.everyspec.com

they run diagonally across the Bladder, around the nose, and under the Bladder. All fourteen (14) straps shall be equal in length and configured so that the longest length of strap on the top surface results in the shortest length of strap underneath and vice versa. This technique of diagonal straps and bonding results in the Bladder being constrained by twenty-eight (28) attachments to the transportation platform.

3.3.2.3 Lift handles. The lift handles shall be 1.75 to 2.0 inches wide U-shaped straps, as shown in Figure 2, fabricated from nylon cloth that is coated with the same coating used externally on the Bladder. They shall be fastened to a coated fabric patch similar to the Bladder material. The patch shall be bonded to the Bladder below the peripheral fold line. The patch shall not be placed over the Bladder's seams. There shall be eight (8) lift handles on the Bladder. The lift handles shall be placed in accordance with Figure l.

3.3.2.4 Fill/evacuate and vent flanges. The fill/evacuate and vent flanges shall be bonded to the coated fabric of the Bladder as shown in Figure 1. The manufacture shall be as shown in Figures 3 and 4. A patch-type procedure may be utilized.

3.3.2.4.1 Fill/evacuate and vent flange protective coatings. The fill/evacuate and vent flanges shall have protective coatings. The minimum coating thickness shall be 0.0004 inch for castings and 0.0007 inch for wrought aluminum. All aluminum parts exposed to view on the outside of the Bladder shall have a dyed coating approximating the Bladder exterior color and shall be non-reflective.

3.3.2.5 Closure plates - fill/evacuate and vent flange. The closure plates shall be bolted to the fill/evacuate and vent flanges prior to shipment. The manufacture shall be as shown in Figures 5 and 6.

3.3.2.5.1 Closure plate protective coatings. Closure Plates shall have protective coatings. The minimum coating thickness shall be 0.0004 inch for castings and 0.0007 inch for wrought aluminum. All aluminum parts exposed to view on the outside of the Bladder shall have a dyed coating approximating the Bladder exterior color and shall be non-reflective.

3.3.2.6 "D" rings (forward restraint harness) and double “D” rings. The double and single "D" Ring assemblies shall be capable of being shaped and welded to form one continuous ring as shown in Figures 7 and 8. Installation of double and single "D" Ring assemblies shall be as specified in 3.3.2.2.

3.3.2.7 Fill/evacuate nozzle. The fill/evacuate nozzle shall be bolted to the fill/evacuate flange utilizing a sealing medium. The nozzle shall be packaged/shipped with the Bladder in the same container. It shall then be installed on the Bladder fill/evacuate flange prior to use. The manufacture shall be in accordance with Figure 9.

3.3.2.7.1 Fill/evacuate nozzle protective coating. Aluminum alloy fill/evacuate nozzle shall have protective coatings. The minimum coating thickness shall be 0.0004 inch for castings and 0.0007 inch for rought aluminum. All aluminum parts exposed to view on the outside of the Bladder shall have a dyed coating approximately the Bladder exterior color and shall be nonreflective.

3.3.2.8 Vent nozzle. The vent nozzle shall be bolted to the vent flange utilizing a sealing medium. The nozzle hall be packaged separately and shipped with the Bladder in the same container. It shall then be installed on the Bladder vent flange prior to use. The manufacture shall be in accordance with Figure 10.

Downloaded from http://www.everyspec.com

3.3.2.8.1 Vent nozzle protective coating. The aluminum alloy vent nozzle shall have protective coatings. The minimum coating thickness shall be 0.0004 inch for castings and 0.0007 inch for wrought aluminum. All aluminum parts exposed to view on the outside of the Bladder shall have a dyed coating approximately the Bladder exterior color and shall be non-reflective.

3.4 Bladder performance and characteristics.

3.4.1 Bladder storage.

3.4.1.1 Storage life. The Bladder shall have a storage life of five (5) years while stored in a collapsed condition. After initial use the Bladder shall withstand an uncontrolled storage environment when tested in accordance with 4.5.3.1.

3.4.1.2 Storage temperature. The Bladder and associated components shall withstand folded storage in a shipping container for five (5) years at ambient temperatures from +160° F to -30° F without damage or leakage, when subsequently filled with fuel and tested in accordance with 4.5.3.2.

3.4.2 Service life. The Bladder and components shall be suitable for operational use for one (1) year at ambient temperatures from +120° F to -20° F, when withdrawn from storage for operational use. The Bladder, secured to a transportation platform in either the filled or unfilled state, shall not leak under normal continued operational use when tested in accordance with 4.5.3.3.

3.4.3 Hydrocarbon fuel contact. The Bladder shall be capable of use with continuous contact with hydrocarbon fuels with 40% percent aromatics, rain water, and water associated with fuels when tested in accordance with 4.5.3.4.

3.4.4 Air leakage. The Bladder shall be capable of withstanding an internal air pressure of 2.25 psig without evidence of leakage when tested in accordance with 4.5.3.5.

3.4.5 Hydrostatic leakage. The Bladder shall withstand a pressure, measured by gauge, of 150% percent (2.25 psig) of the normal pressure encountered during service for the duration of 15 minutes without evidence of leakage. The Bladder shall not leak under normal transportation and use when tested in accordance with 4.5.3.6.

3.4.6 Surge damping. The Bladder shall dampen the fluid surge and not allow self-amplification of the fluid surge during normal operational use when tested in accordance with 4.5.3.7.

3.4.7 Load stresses. In the filled condition, the Bladder and its integral restraints shall withstand a forward stress load of 3.0 g's, an aft load of 1.5 g's, a vertical load of 2.0 g's, and a transverse load of 1.5 g's. The Bladder shall withstand an 8.0 g forward stress (overload) condition when tested in accordance with 4.5.3.8.

3.4.8 Fill/vent rate. The Bladder, with fill/evacuate nozzle and vent nozzle installed, shall permitfill/evacuate rates of 600 gpm when tested in accordance with 4.5.3.9.

3.5 Environmental requirements.

3.5.1 Low temperature. The Bladder shall show no degradation from low temperature exposure either visually or hydrostatically when tested in accordance with 4.6.1.

Downloaded from http://www.everyspec.com

3.5.2 High temperature. The Bladder shall show no degradation from high temperature exposure either visually or hydrostatically when tested in accordance with 4.6.2.

3 5.3 Humidity. The Bladder shall show no degradation from humidity exposure either visually or hydrostatically when tested in accordance with 4.6.3.

3.5.4 Vibration. The shipping container shall show no breakage, loosening of skids, bolt distortion, nor any anomaly that may affect service or storage life. The Bladder shall show no deformation, seam damage, cracking or peeling, separation of bonds, chafing, or any anomaly that may affect the mission or service life. Both these requirements shall be met when tested in accordance with 4.6.4.

3.5.5 Salt-fog. The Bladder shall show no degradation from salt-fog exposure either visually or hydrostatically when tested in accordance with 4.6.5

3.5.6 Fungus. The Bladder shall show no ability to support spore growth when tested in accordance with 4.6.6.

3.5.7 Ozone resistance. The Bladder shall show no evidence of cracking or checking after exposure to an ozone environment when tested is accordance with 4.6.7.

3.6 Destructive testing. Destructive testing shall be performed on a completed Bladder selected from pre-production for this test. This test shall test sample fabric parts, subsystem components, chemical analysis, methodology, workmanship, and inspection and installation technique of fluid flow restrictors. In accordance with 4.7, the following tests will be accomplished:

3.6.1 Lift handle. When inspected in accordance with 4.7.1 the bonds between each handle patch and the Bladder fabric shall be capable of withstanding perpendicular loads of 1000 pounds.

3.6.2 Forward restraint harness. When inspected in accordance with 4.7.2, the restraint harness with the attached "D" ring shall be capable of withstanding a 10,000 pound tensile load without breakage of the nylon weave or wraparound attachment of the "D" ring. The stitching of the sewn areas for the harness-to-harness overlay attachments shall show no evidence of degradation. Total elongation of the harness under the tensile load shall not exceed 25% percent nor 10% percent when load is relaxed.

3.6.3 Nylon tie cord. When inspected in accordance with 4.7.3, the nylon tie cord shall be capable of withstanding a 450 pound tensile load without breakage of external woven overlay or seven (7) internal cords. Elongation shall not exceed 25% percent under tensile load or 10% percent when load is relaxed.

3.6.4 Fluid flow restrictor tie-down. When inspected in accordance with 4.7.4, the fluid flow restrictor tie down shall be subjected to a tensile load of 1500 pounds through the eyelets. There shall be no degradation of the bond and no eyelet tearing through the cloth member. Distortion of the eyelet is permissible where cable contact is made.

3.6.5 Bladder material - tensile load. When inspected in accordance with 4.7.5, the Bladder material sample shall be subjected to a 3000 pound tensile load. The sample shall not show evidence of

Downloaded from http://www.everyspec.com

degradation in the form of tearing or breaking of the fabric weave, no separation of weave to coating, and no cracks or tears in the coating. The sample elongation shall not exceed 25% percent under load nor 10% percent when load is relaxed.

3.6.6 Bonded seam-in-line tensile load. When inspected in accordance with 4.7.6, the seam shall show no evidence of degradation in the form of bonding, cracking, fabric tear, sealing or separation of weave or coating on either side of the Bladder.

3.6.7 Bonded seam-across-seam tensile load. When inspected in accordance with 4.7.7, the seam shall show no evidence of degradation in the form of bonding, cracking, fabric tear, sealing or separation of weave or coating on either side of the Bladder.

3.6.8 Bonded fittings (vent-fill/evacuate flanges). When inspected in accordance with 4.7.8, the fittings shall show no evidence of separation of the bond between the flange and the Bladder skin.

3.6.9 "D" rings - tensile load. When inspected in accordance with 4.7.9, the "D" rings shall have a 10,000 tensile load applied in the direction from the base to the nose. After this load has been relaxed the "D" rings shall shown no evidence of breakage or distortion.

3.6.10 "D" rings - metallurgy. When inspected in accordance with 4.7.10, the inspection results shall indicate that the material is equivalent to ASTM A276 Type 304L Stainless Steel.

3.6.11 Nozzle assemblies - metallurgy. When inspected in accordance with 4.7.11, the inspection results shall indicate that the material is equivalent to ASTM B221 Type 6061-T6 Aluminum.

3.6.12 Vent and fill/evacuate flanges - metallurgy. When inspected in accordance with 4.7.12, the inspection results shall indicate that the material is equivalent to ASTM B221 Type 6061-T6 Aluminum.

3.7 Identification marking The Bladder shall be identified in accordance with MIL-STD-130 by means of an identification label. The label shall be made of coated fabric and bonded to the Bladder. The following information shall be molded, either recessed or in relief, using 0.50 inch lettering on the identification label:

Bladder, Fabric
3000 Gallons, Petroleum
NSN: xxxx-xx-xxx-xxxx
Mfg.: Name and Location
Serial No.: xxxx
Mfg. Date: month/year
Contract No.: xxxx
Lot No.: xxxx

3.8 Workmanship. Workmanship shall be the highest quality and shall permit no defects adversely affecting the strength or serviceability of the finished Bladder. The reinforced flange type fittings shall contain no voids or cracks that could adversely affect the strength of the assembly. All metal parts shall be free of sand, dirt, and scale. Surfaces shall be smooth with edges rounded or beveled. The inside and the outside of the Bladder shall be clean and free of all foreign material. Any

Downloaded from http://www.everyspec.com

necessary repair and rework shall restore the reworked area to its full strength and shall meet all the applicable requirements of this specification. The bonded surfaces of all seamed areas, fitting flanges, and patch-type repairs shall effect a bond that will result in the strength of the bonded area not less than the strength of the adjacent Bladder fabric.

3.8.1 Repair and rework of bladders. Any repair and rework of any Bladder shall be performed prior to quality conformance inspection with the exception of air leakage. Repair and rework of a seam shall not exceed 10% percent of the length of the seam. Repair and rework of panels shall be limited to areas of damage not greater than six (6) inches in length, six (6) inches in width, or two (2) inches in diameter. All repair and rework procedures shall be in accordance with the Repair and Rework Plan.

3.8.2 Repair and rework plan. The contractor shall prepare a Repair and Rework Plan. The plan shall include a specific description of methods and procedures for the repairs and/or rework of anomalies which might occur during the manufacturing or assembly of the Bladder. The plan shall include documented work instructions which shall be used by the contractor to ensure that repaired and reworked areas have structural integrity equal to or greater than seams or panels that have not been reworked. No part of this plan shall conflict with or take precedence over the requirements of this specification. The plan shall be made available, upon request, to the Government.

4. VERIFICATION

4.1 Classification of inspections. The inspection requirements specified herein are classified as follows:

a. Production lot testing (see 4.2)

b First article inspection (see 4.3)

c. Quality conformance inspection (see 4.4)

4.2 Production lot testing. Unless otherwise specified, the production lot testing will be performed by the contractor. Acceptance of one tested Bladder shall not exclude the remaining Bladders from meeting all the requirements of the specification. Failure to meet any requirement of this specification shall constitute failure of the production lot.

4.2.1 Completed bladder testing Each completed Bladder shall be examined as specified in 4.4 and subjected to the environmental and destructive tests of 4.6 and 4.7. Any non-conformance revealed by the examination or failure of the test shall be cause for rejection of the Bladder.

4.2.2 Sampling for destructive testing. Selection of Bladders for destructive testing shall be in accordance with the Sample Selection Plan (see 3.1.1), and shall be subjected to tests in 4.7. Bonded fittings, seams, forward restraints, lift handles, fluid flow restricter, nylon tie cord, main body, and "D" Rings shall be tested. The frequency for random selection shall be one (1) for every twenty-six (26) Bladders. The Bladder used for destructive testing shall remain the property of the contractor. Failure to meet any requirement of destructive testing shall constitute failure of the production lot (see 3.6).

4.3 First article inspection. First article inspection shall be performed on five (5) Bladders when a first article sample is required (see 3.1 and 6.2). This inspection shall include the examination of 4.5 and the tests of 4.6 and 4.7. Presence of one or more defects shall be cause for rejection.

Downloaded from http://www.everyspec.com

4.4 Quality conformance inspection. Each Bladder shall be inspected for compliance with the requirements specified in 3.3.2 through 3.4, 3.7 and 3.8. Any redesign or modification of the product to comply with specified requirements, or any necessary redesign or modification following failure to meet the specified requirements shall receive particular attention to adequacy and suitability. This element of inspection shall encompass all visual, dimensional, and performance requirements. Noncompliance with any specified requirement or presence of one or more defects preventing or lessening maximum efficiency shall constitute cause for rejection.

4.5 Examination procedure. The following procedures shall be utilized to perform the visual, dimensional, and performance examination of the selected Bladder and its associated parts.

4.5.1 Visual examination. The following examinations shall be accomplished to visually ensure compliance with the workmanship and finish requirements of Section 3, and Figures 1 through 10. Any visual anomaly or workmanship discrepancy that may affect service use shall be justification for test failure (see 3.3.2, 3.7 and 3.8).

4.5.1.1 Examination setup. The Bladder shall be laid out flat in an inspection area that allows access from all sides. The area shall be large enough for the Bladder to be pulled from one end back over itself enabling the Bladder to be turned upside down. The minimum required floor space of the inspection area is 12 feet wide by 40 feet long.

4 5.1.2 Examination procedure. The following visual examinations shall be performed and the results thereof recorded on the appropriate data sheets produced by contractor.

4.5.1.2.1 Bladder assembly. The entire external surface shall be visually examined for continuity, uniformity, surface texture, bonding of seams, patches, workmanship, appearance, and any anomaly that may affect service use. In addition, lift handle location and count shall be made along with the location and total of lateral tie down Double "D" Rings. The Double "D" Rings shall be located on the transverse center-line longitudinally along the top side of the Bladder (see 3.3.2.1).

4.5.1.2.2 Harness layout and attachment configuration. The forward restraint harness layout and attachment configuration on top of the Bladder shall be uniform and equal on both lateral sides of the Bladder. The forward attachment technique and patch shall be conformable and uniform across the forward end of the Bladder. The Bottom Harness Configuration shall not be bonded to the Bladder aft of the forward attachment point (see 3.3.2.2).

4.5.1.2.3 Lift handles. The lift handles shall be visually examined for uniformity of casting or machining, workmanship, freedom from burrs and sharp edges, cracks, protective coating, and any anomaly that may affect service use (see 3.3.2.3).

4.5.1.2.4 Fill/evacuate flange. The fill/evacuate flange shall be visually examined for uniformity ofcasting or machining, workmanship, freedom from burrs and sharp edges, cracks, protective coating, and any anomaly that may affect service use (see 3.3.2.4).

4.5.1.2.5 Vent flange. The vent flange shall be visually examined for uniformity of casting or machining, workmanship, freedom from burrs and sharp edges, cracks, protective coating, and any anomaly that may affect service use (see 3.3.2.4).

Downloaded from http://www.everyspec.com

4.5.1.2.6 Closure plates - fill/evacuate and vent flange. The closure plates shall be visually examined for uniformity of casting or machining, workmanship, freedom from burrs and sharp edges, cracks, protective coating, and any anomaly that may affect service use (see 3.3.2.5).

4.5.1.2.7 "D" rings (forward restraint harness) and Double "D" rings . The "D" rings and double "D" rings shall be visually examined for uniformity of casting or machining, workmanship, cracks, freedom from burrs and sharp edges, and any anomaly that may affect service use (see 3.3.2.6).

4.5.1.2.8 Fill/evacuate nozzle. The fill/evacuate nozzle shall be visually examined for uniformity of casting or machining, workmanship, cracks, protective coating, freedom from burrs and sharp edges, and any anomaly that may affect service use (see 3.3.2.7).

4 5.1.2.9 Vent nozzle. The vent nozzle shall be visually examined for uniformity of casting or machining, workmanship, cracks, protective coating, freedom from burrs and sharp edges, and any anomaly that may affect service use (see 3.3.2.8).

4.5.2 Dimensional inspection. The following items shall be dimensionally examined in accordance with the requirements in section 3, and the appropriate figures of this specification, to ensure compatibility with the existing system, drawing package compliance, and product assurance. The results of this inspection showing dimensions greater than allowable specified tolerances shall be considered a failure of the test (see 3.3.2).

4.5.2.1 Test procedure. The following dimensional examinations shall be performed and the results thereof recorded. Traceable measurement instrumentation shall be utilized and recorded.

4.5.2.1.1 Bladder assembly. Prior to sectioning the Bladder, the length, width, and average height shall be measured and recorded with the Bladder collapsed. The location of the lateral tie downs (Double "D" Rings), fill/evacuate and vent flanges shall be measured and recorded in accordance with Figure 1 (see 3.3.2.1).

4.5.2.1.2 Forward restraint harness. The forward restraint harness shall be measured for total length, width, and thickness in the assembled position. All individual harnesses shall be measured and recorded in accordance with Figure 1. All individual straps shall be equal to the specified length +2 inches. The fold back of harness through "D" Ring shall be 12 inches +1.2 inches minimum (3.3.2.2).

4.5.2.1.3 Lift handles. The lift handle shall be dimensionally examined to verify compliance with Figure 2. Verify lift handle location, count, shape, and bonding technique. Two (2) lift handles shall be examined (3.3.2.3).

4.5.2.1.4 Fill/evacuate flange. The fill/evacuate flange shall be dimensionally examined to verify compliance with Figure 3. Verify depth of threaded holes, diameters, thickness, thread size, shape, seal groove, and threaded hole placement (3.3.2.4).

4.5.2.1.5 Vent flange. The vent flange shall be dimensionally examined to verify compliance with Figure 4. Verify the depth of the threaded holes, diameters, thickness, thread size, shape, seal groove, and threaded hole placement (3.3.2.4).

Downloaded from http://www.everyspec.com

4.5.2.1.6 Closure plate - fill/evacuate and vent flange. The vent flange shall be dimensionally examined to verify compliance with Figures 5 and 6. Verify the depth of the threaded holes, diameters, thickness, thread size, shape, seal groove, and threaded hole placement (3.3.2.5).

4.5.2.1.7 Double "D" rings. The Double "D" Rings shall be dimensionally examined to verify compliance with Figure 7. Verify diameters, shape, angles, weldment and overall length, width, and height. Two (2) ring assemblies shall be inspected (3.3.2.6).

4.5.2.1.8 "D" ring (forward restraint harness). The "D" Rings shall be dimensionally examined to verify compliance with Figure 8. Verify diameters, shape, angles, weldment and overall length, width, and height. Two (2) rings shall be examined (3.3.2.6).

4.5.2.1.9 Fill/evacuate nozzle. The fill/evacuate nozzle shall be dimensionally examined to verify compliance with Figure 9. Verify hole placement, diameters, thickness, height, shape, cover fit, locking levers, and lanyard attachment technique (3.3.2.7).

4.5.2.1.10 Vent nozzle. The vent nozzle shall be dimensionally examined to verify compliance with Figure 10. Verify hole placement, diameters, thickness, height, shape, cover fit, locking levers, and lanyard attachment technique (3.3.2.8).

4.5.3 Performance inspection. The Bladder shall be subjected to the following performance requirements as specified in 3.4.1 through 3.4.8. Failure of any element of this inspection constitutes failure of the entire lot.

4.5.3.1 Storage life. Test in accordance with 4.5.3.5 Air Leakage (see 3.4.1.1).

4.5.3.2 Storage temperature. Test in accordance with 4.5.3.5 Air Leakage (3.4.1.2).

4.5.3.3 Service life. Test in accordance with 4.5.3.5 Air Leakage (3.4.2).

4.5.3.4 Hydrocarbon fuel contact. The hydrocarbon fuel contact test shall be performed on the bladder to verify the integrity of the bladder when filled with diesel fuel. Any evidence of leakage or seepage shall constitute failure of this test (see 3.4.3).

4.5.3.4.1 Test setup. The Bladder shall be fully assembled with nozzles attached and locked. The tank shall be placed outdoors without any environmental protective covering.

4.5.3.4.2 Test procedure. Fill the tank with its rated capacity of diesel fuel (VV-F-800) or JP-8 and allow to stand for 60 days, +2, -0 days. During the test and at the end of this period, examine the tank for seepage and leakage. Immediately after the tank is emptied, the tank bottom shall be examined for leakage and seepage.

4.5.3.5 Air leakage. The air leakage test shall be performed on the Bladder to verify the integrity of the Bladder fabric, fittings, and external seams when pressurized with air. Any evidence of leakage of air from the Bladder shall be cause for rejection (see 3.4.1 and 3.4.4).

4.5.3.5.1 Test setup. The Bladder shall be fully assembled with nozzles attached and locked. An air source shall be attached to the fill/evacuate nozzle pressure gauge port with the configuration such that pressure readings may be accomplished.

Downloaded from http://www.everyspec.com

4.5.3.5.2 Test procedure. Fill the Bladder with air until the pressure gauge indicates 2.25 psig. The Bladder shall remain pressurized for the duration of 0.5 hours. Then, at the completion of 0.5 hours, use a soap and water solution to examine the tank fabric, all fittings and external seems for leakage.

4.5.3.6 Hydrostatic leakage test. The hydrostatic leakage test shall be performed on the Bladder to verify the integrity of the Bladder fabric, fittings, and external seams when pressurized with water. Failure of the Bladder to maintain the specified pressure without leakage shall be cause for rejection (see 3.4.5).

4.5.3.6.1 Test setup. The Bladder shall be fully assembled and installed on a HCU-6/E463-L, Type II or Type V, aerial delivery platform. All diagonal restraints and lateral restraints shall be connected. The vent nozzle assembly shall be left unfastened. The fill/evacuate nozzle shall be installed and sealed. A water source shall be connected to the fill/evacuate pressure gauge port in a configuration that fill and pressure readings may be accomplished. The water source must contain a flowmeter to indicate total flow in gallons.

4.5.3.6.2 Test procedure. Fill the Bladder with water until a total of 2400 gallons is obtained. Seal the vent nozzle by activating the locking arms. Tighten all ratchet assemblies on diagonal and lateral restraints. Continue filling the Bladder with water until the pressure gauge indicates 2.25 psig. Secure water and set valve controls to allow pressure gauge monitoring of the Bladder. Commence a 15-minute test time while monitoring pressure in the Bladder. At completion of the test duration, adjust valves to relieve pressure on the Bladder.

4.5.3.7 Surge damping. A detailed engineering evaluation shall be conducted on the tank to ensure that fluid surges do not occur. Engineering calculations may be utilized in determination of this requirement (see 3.4.6).

4.5.3.8 Load stresses. A detailed engineering evaluation shall be conducted on the tank to determine compliance with the tests specified in MIL-STD-1791 for air transport in types C-130, C-141, C-5 and C-17 aircraft. The evaluation shall also include a dimensional analysis for the tank while loaded aboard the C-130 aircraft (see 3.4.7).

4.5.3.9 Fill/vent rate. The 600 gpm flow rate into the tank shall be measured utilizing a calibrated flowmeter. Evacuation rates of fuel from the tank shall be 600 gpm and likewise be demonstrated and measured by means of a calibrated flowmeter. The flow rates shall be maintained for a minimum of 2 minutes. Failure to maintain stated flow rate shall be cause for rejection (see 3.4.8).

4.6 Environmental tests. The Bladder shall be subjected to the environmental tests specified in 3.5.1 through 3.5.7 to verify performance of the Bladder after exposure.

4.6.1 Low temperature. The Bladder shall be subjected to the low temperature test to determine if it can be stored, manipulated, and operated under pertinent low temperature conditions without experiencing physical damage or deterioration in performance. Failure of this test shall be cause for rejection (see 3.5.1).

4.6.1.1 Test setup. The Bladder, in its shipping container, shall be installed in a test chamber. The external case of the container shall be instrumented with a thermocouple.

Downloaded from http://www.everyspec.com

4.6.1.2 Test procedure. Adjust the chamber ambient temperature until -40° F is attained. Start a 72-hour soak at -40° F. At the completion of 72 hours, adjust the chamber ambient to +75° F. Maintain this condition for24 hours. At the completion of 24 hours, remove the shipping container from the chamber and place it in an assembly area. Remove the Bladder from the shipping container. Perform a visual examination and hydrostatic test in accordance with 4.5.1 and 4.5.3.6.

4.6.2 High temperature. The Bladder shall be subjected to the high temperature test to determine if it can be stored, manipulated, and operated under hot climatic conditions without experiencing physical damage or deterioration in performance. Failure of this test shall be cause for rejection (see 3.5.2).

4.6.2.1 Test setup. The Bladder, in its shipping container, shall be installed in a test chamber. The external case of the container shall be instrumented with a thermocouple.

4.6.2.2 Test procedure. Adjust ambient air temperature to Condition 1 of Table I. When conditions and temperature are met, continue with the 24-hour cycle per Table I. Repeat the 24 hour cycle until a total of seven (7) cycles are completed. Return ambient temperature to +75°F and stabilize for 24 hours. Remove the shipping container from the chamber and place it in an assembly area. Remove the bladder from the shipping container. Perform a visual examination and hydrostatic test in accordance with 4.5.1 and 4.5.3.6.

TIME	TEMP(F)	TIME	TEMP(F)
0000 Cond 1	95	1300	156
0100	95	1400	158
0200	94	1500	160
0300	94	1600	158
0400	92	1700	153
0500	92	1800	145
0600	91	1900	131
0700	97	2000	118
0800	104	2100	105
0900	111	2200	103
1000	124	2300	99
1100	133	2400	95
1200	145		

TABLE I - HIGH TEMPERATURE 24-HOUR CYCLE

4.6.3 Humidity test. The Bladder shall be subjected to the humidity test to determine theresistance of the Bladder material to the effects of a warm, humid atmosphere. Failure of this test shall be cause for rejection (see 3.5.3).

4.6.3.1 Test setup. The Bladder shall be installed in a test chamber on a non-conductive, nonferrous platform. The vent and fill/evacuate caps shall be installed and locked. The Bladder shall be pressurized with air to 0.25 psig through the fill/evacuate nozzle pressure gauge port.

4.6.3.2 Test procedure. Gradually raise the internal chamber temperature to 140° F and relative humidity (RH) to 95% +5% over a period of two (2) hours. The rate of temperature change shall not exceed 1° F per minute. Maintain these conditions for six (6) hours. Reduce the chamber ambient temperature to 86° F over an eight (8) hour period, while maintaining the RH at 85% or greater. Raise RH to 95% +5%. Maintain 86° F at RH 95% +5% for eight (8) hours. Repeat the above cycle for an

Downloaded from http://www.everyspec.com

additional nine (9) times for 240 hours of exposure. At the completion of 240 hours of exposure, return the chamber ambient to room. With the Bladder inflated, perform a visual examination. Deflate the Bladder and remove it from the-test chamber. Set up the Bladder in the assembly area and perform a visual examination and a hydrostatic test in accordance with 4.5.1 and 4.5.3.6.

4.6.4 Vibration test. The Bladder shall be subjected to the vibration test to determine the resistance of theBladder to vibrational stresses expected in its shipment. Failure of this test shall be cause for rejection (see 3.5.4).

4.6.4.1 Test setup. The Bladder, in its shipping container, shall be mounted on a vibrator. Securing of the container shall be achieved by the use of ratchet type tie down straps used by the common carrier. The straps shall be equidistantly placed transversely on the longitudinal axis.

4.6.4.2 Test procedure. Expose the Bladder and shipping container to sinusoidal vibration from 10 Hz to 500 Hz at the power spectral density levels required for axis direction as per AF Dwgs 514.3-1, 514.3-2, and 514.3-3 of MIL-STD-810D. Exposure duration shall be two (2) hours per axis. Axis sequence shall be vertical, transverse, and longitudinal. At the completion of six (6) hours of vibration, the shipping container with the Bladder shall be moved to an assembly area. A visual examination of the shipping container and Bladder shall be performed in accordance with 4.5.1. The Bladder shall then be subjected to a hydrostatic test in accordance with 4.5.3.6.

4.6.5 Salt-fog test. The Bladder shall be subjected to the salt-fog climatic test to determine the resistance of the Bladder to the effects of an aqueous-salt atmosphere. Failure of this test shall be cause for rejection (see 3.5.5).

4.6.5.1 Test setup. The Bladder shall be installed in a test chamber on a non-conductive, nonferrous platform. The vent and fill/evacuate caps shall be installed and locked. The Bladder shall be pressurized with air to 0.25 psig through the fill/evacuate nozzle pressure gauge port.

4.6.5.2 Test procedure. Perform a salt-fog test in accordance with MIL-STD-810D, Method 509.2 with a 5% percent salt solution for a duration of 48 hours. At the completion of 48 hours of exposure, remove the Bladder from the chamber and perform a 48 hour drying period in ambient atmosphere. At the completion of the 48 hour drying period, with the Bladder still inflated, perform a visual examination in accordance with 4.5.1. The Bladder shall be washed with tap water to remove salt deposits to aid in the visual examination. At the completion of the visual examination, deflate the Bladder and set it up in an assembly area, and perform a hydrostatic test in accordance with 4.5.3.6.

4.6.6 Fungus test. The Bladder shall be subjected to the fungus test to assess the extent to which the Bladder will support fungal growth or how the fungal growth may affect performance or use of the Bladder. Failure of any part of this test shall be cause for rejection (see 3.5.6).

4.6.6.1 Test setup. Three (3) sample fabric parts and a component sample as described in 4.6.6.1.1 through 4.6.6.1.4 shall be obtained from the Bladder utilized for destructive testing as specified in 4.7.

4.6 6.1.1 Sample 1. Sample 1 shall be a four (4) inch by four (4) inch piece of five layer sandwich material.

Downloaded from http://www.everyspec.com

4.6.6.1.2 Sample 2. Sample 2 shall be a three (3) inch by six (6) inch piece of forward restraint harness.

4.6.6.1.3 Sample 3. Sample 3 shall be a four (4) inch by four (4) inch piece of fluid flow restricter material.

4.6.6.1.4 Sample 4. Sample 4 shall be one (1) vent nozzle.

4.6.6.2 Test procedure. The test samples shall be tested in accordance with MIL-STD-810D, Method 508.3. Cleaning and preparation for inoculation shall be performed in accordance with MIL-STD-810D, Method 508.3. The test shall be interrupted at seven (7) day intervals, during a total of 28 days, to ascertain spore growth on control samples.

4.6.7 Ozone resistance test. The Bladder shall be subjected to the ozone resistance test to assess the estimation of the resistance of the Bladder material to an atmosphere containing ozone. Evidence of cracking or checking after exposure to ozone shall be cause for rejection (see 3.5.7).

4.6.7.1 Test setup. Three (3) test samples as described in 4.6.7.1.1 through 4.6.7.1.3 shall be obtained from the Bladder utilized for destructive testing as specified in 4.8. Test apparatus shall be of amaterial that will not alter test results by reaction to ozone atmosphere.

4.6.7.1.1 Sample 1. Sample 1 shall be a one (1) inch by six (6) inch strip configured such that a 20% percent elongation load is applied.

4.6.7.1.2 Sample 2. Sample 2 shall be a one (1) inch by 3.75 inch strip configured in a bent loop fashion and attached at the ends of the strip in a clamping device.

4.6.7.1.3 Sample 3. Sample 3 shall be a tapered strip measuring 0.75 inch to one (1) inch in width and six (6) inches long configured in a clamping device with a 20% percent elongation load.

4.6.7.2 Test procedure. The test samples shall be tested in accordance with ASTM D 1149. The test samples shall be placed in an ozone-free atmosphere for a period of 24 hours and then placed in the test chamber. The chamber ambient temperature shall be adjusted to 100 +2° F and to an exposure of ozone concentration of 120 +10 parts by volume of ozone per million parts by volume of air. The air-ozone velocity in the chamber shall be at least two (2) feet per second. The samples shall be exposed to these conditions for 60 minutes. At the completion of testing with specimens in mounting fixtures, a visual inspection with 10X magnification shall be performed.

4.7 Destructive testing. Destructive testing shall be performed on a completed bladder selected from pre-production for destructive testing (see 3.6). The bladder shall be sectioned for testing sample fabric parts, subsystem components, chemical analysis, workmanship, methodology, inspection, and installation technique of fluid flow restrictors. The following tests will be performed on this bladder and are detailed in the following subs:

a. Lift handle
b. Forward restraint harness
c. Nylon tie cord
d. Fluid flow restrictor tie-down
e. Bladder material-tensile load

Downloaded from http://www.everyspec.com

f. Bonded seam-in-line tensile load
g. Bonded seam-across-seam tensile load
h. Bonded fittings (vent-fill/evacuate flanges)
i. “D” rings - tensile load
j. “D” rings - metallurgy
k. Nozzle assemblies - metallurgy
l. Vent-fill/evacuate flanges - metallurgy

For the requirements of 3.6.1 through 3.6.12, the appropriate part/component shall be sectioned from the Bladder. The recommended sectioning to be followed is to cut laterally across the Bladder just aft of the seam, aft of the last forward restraint harness attachment point. Place a longitudinal cut to the left or right of the vent flange from the lateral cut to the aft of the Bladder stopping at the peripheral fold line. These two cuts shall enable sectioning of the majority of components required for testing.

4.7.1 Lift Handle. The Bladder lift handle shall be subjected to a tensile load test to verify that the workmanship and bonding techniques are compliant with the requirements of this specification. The lift handle and patch assembly shall display no damage, permanent distortion, separation of the lift handle from the patch, or separation of the patch from the Bladder skin. Any of the above shall constitute failure of this test (see 3.6.1).

4.7.1.1 Test setup. The test sample shall consist of the lift handle and a minimum of six (6) inches of Bladder skin material around the patch area. The Bladder skin shall be clamped in a configuration to prevent movement with the lift handle centrally located within the clamps. With the sample held securely, tension shall be applied through a one (1) inch diameter bar or pipe inserted through the loop of the lift handle in a perpendicular direction. The tension shall be applied slowly and smoothly until the specified load is reached. Two (2) samples shall be tested.

4.7.1.2 Test procedure. Apply the tension slowly to the lift handle until a load of 1500 pounds is attained. Maintain the load for a duration of one (1) minute. Release the load, remove the bar and retaining clamps, and perform a visual examination.

4.7.2 Forward restraint harness. The Bladder forward restraint harness shall be subjected to a tensile load test to verify that the workmanship and bonding techniques are compliant with the requirements of this specification. Failure of the tensile load test shall be cause for rejection (see 3.6.2).

4.7.2.1 Test setup. Two (2) samples of the forward harness shall be cut from the restraint system, each being 24 inches in length excluding the "D" Ring. The samples shall be installed in a fixture capable of attachment to the “D” Ring on one end and clamping of the harness on the other. A sampling length of 12 inches shall be marked on the harness to enable elongation measurement at tensile load and load removed conditions.

4.7.2.2 Test procedure. Apply the tensile load as uniformly as possible until a load of 10,000 pounds is attained. While maintaining the load, measure the elongation of the harness by measuring the distance between the marked areas, and record data. Remove the tensile load and remeasure the distance between the marked areas to measure relaxed elongation and record data. Calculate elongation for both measurements as a percentage. Perform a visual examination.

Downloaded from http://www.everyspec.com

4.7.3 Nylon tie cord. The Bladder nylon tie cord, used to fasten the fluid flow Restricters. to the Bladder, shall be subjected to a tensile load test to verify that its strength and elongation is compliant with the requirements of this specification. Failure of the tensile load test shall be cause for rejection (see 3.6.3).

4.7.3.1 Test setup. Install a sample of nylon tie cord into a tensile test machine utilizing lockjaw mechanism to prevent cord slippage during tensile loading. Allow a 4 inch minimum exposure of cord to attach a 4 inch extensometer.

4.7.3.2 Test procedure. Apply the tensile load uniformly until a 450 pound load is attained. Maintain the load for one (1) minute. Measure and record the elongation of the cord. Remove the tensile load and measure and record the relaxed elongation.

4.7.4 Fluid flow restricter tie-down. The Bladder fluid flow restricter tie down shall be subjected to a tensile load test to verify that the workmanship, bonding technique, and strength of eyelets are compliant with the requirements of this specification. Failure of the tensile load test shall be cause for rejection (see 3.6.4).

4.7.4.1 Test setup. Remove from the destructive test Bladder one (1) fluid flow restricter tie down allowing six (6) inches of material in all directions from the bonded area. Clamp the Bladder material to a load frame in a manner to allow a vertical pull on the fluid flow restricter so that only the bonded area is tested. Loop a cable through each eyelet and around the spreader bar to allow equal loading to the eyelets. Attach the spreader bar to the loading device.

4.7.4.2 Test procedure. Apply a tensile load uniformly until the 1500 pound load is attained. Maintain the load for a one (1) minute duration. Remove the load and perform a visual examination of the bonded area.

4.7.5 Bladder material-tensile load. A sample of the Bladder material shall be subjected to a tensile load test to verify that the workmanship and bonding techniques are compliant with the requirements of this specification. Failure of the tensile load test shall be cause for rejection (see 3.6.5).

4.7.5.1 Test setup. Cut a two (2) inch by 40 inch test sample of a five layer sandwich section of the Bladder, from the Bladder utilized for destructive testing as specified in 4.7. Install the sample in a tensile test machine utilizing locking-jaw mechanism to prevent slippage during tensile loading. Install a four (4) inch extensometer to a conveniently exposed area on the sample.

4.7.5.2 Test procedure. Apply a tensile load uniformly until the 3000 pound load is attained. Maintain the load for one (1) minute. Measure and record the elongation. Remove the tensile load and measure and record the relaxed elongation.

4.7.6 Bonded seam - in-line tensile load. A sample of the Bladder bonded seam shall be subjected to a tensile load test to verify that the workmanship and bonding techniques are compliant with the requirements of this specification. Failure of the tensile load test shall be cause for rejection (see 3.6.6).

Downloaded from http://www.everyspec.com

4.7.6.1 Test Setup. Cut a 40 inch sample of seam from the Bladder including enough material to encompass all bonded material at the seam. Install in a tensile test configuration to prevent slippage during tensile loading.

4.7.6.2 Test procedure. Apply a tensile load uniformly until the 3000 pound load is attained. Maintain the load for one (1) minute. Measure and record any separation of the seam area.

4.7.7 Bonded seam - across seam tensile load. A sample of the Bladder bonded seam shall be subjected to a tensile load test to verify that the workmanship and bonding techniques are compliant with the requirements of this specification. Failure of the tensile load test shall be cause for rejection (see 3.6.7).

4.7.7.1 Test setup. Cut a 12 inch sample of seam from the destructive test Bladder including enough material on both sides of the seam to allow clamping. Install in a tensile test configuration to enable testing across the seam.

4.7.7.2 Test procedure. Apply a tensile load uniformly until the 3000 pound tensile load is attained. Maintain the load for one (1) minute. Measure and record any separation of the seam area.

4.7.8 Bonded fittings (vent-fill/evacuate flanges). A sample of the Bladder bonded fitting shall be subjected to a tensile load test to verify that the workmanship and bonding techniques are compliant with the requirements of this specification. Failure of the tensile load test shall be cause for rejection (see 3.6.8).

4.7.8.1 Test setup. The vent-fill/evacuate flanges shall be removed from the Bladder allowing a minimum of six (6) inches of Bladder material beyond any bonded attachment. Install the flange in a tensile test configuration, such that the Bladder material on opposite sides of the flange are subjected to the tensile load, thereby transmitting the load through the bonded areas of the Bladder and to the flange/bladder interface.

4.7.8.2 Test procedure. Apply the tensile load uniformly until the 350 pound tensile load is attained. Maintain the load for a duration of one (1) minute. Remove the load and perform a visual examination.

4.7.9 "D" rings - tensile load. The Bladder "D" Rings shall be subjected to a tensile load test to verify that their strength is compliant with the requirements of this specification. Failure of the tensile load test shall be cause for rejection (see 3.6.9).

4.7.9.1 Test setup. Remove one of each type "D" Ring from the Bladder (Lateral-Double "D" Ring and Forward Restraint "D" Ring). Install each ring individually in a tensile test machine.

4.7.9.2 Test procedure. Apply a tensile load uniformly to each ring from base to nose until the 10,000 pound tensile load is attained. Maintain the load for 30 seconds. Remove the tensile load and perform a visual examination.

4.7.10 "D" rings - metallurgy. The Bladder "D" Ring shall be subjected to a materials analysis to ensure that the material is compliant with the requirements of this specification. Failure of the analysis shall be cause for rejection (see 3.6.10).

Downloaded from http://www.everyspec.com

4.7.10.1 Test setup. Remove one (1) of each type "D" Ring from the Bladder restraint harness, (forward restraint "D" Ring, and lateral tie-down double "D" Ring). Cut a one (1) inch sample from each ring.

4.7.10.2 Test procedure. Place each sample individually into an arc emission spectrometer interconnected with computer interface and printer. Perform an arc emission spectrometry test on each sample and retrieve a data printout.

4.7.11 Nozzle assemblies - metallurgy. The Bladder nozzle assemblies shall be subjected to a materials analysis to ensure that the materials and protective coatings are compliant with the requirements of this specification. Failure of the analysis shall be cause for rejection (see 3.6.11).

4.7.11.1 Test setup. Remove from one (1) fill/evacuate nozzle and one (1) vent nozzle, approximately one (1) square inch of material to be analyzed. Remove paint or any protective coating to present a clean sample.

4.7.11.2 Test procedure. Perform a hardness test on each sample. Following the hardness test, place each sample individually into an arc emission spectrometer, interconnected with the computer interface and printer. Perform an arc emission spectrometry test on each sample and retrieve a data printout.

4.7.12 Vent and fill/evacuate flanges - metallurgy. The Bladder vent and fill/evacuate flanges shall be subjected to a materials analysis to ensure that the materials and protective coating are compliant with the requirements of this specification. Failure of the analysis shall be cause for rejection (see 3.6.12).

4.7.12.1 Test setup. Remove from one (1) vent flange and one (1) fill evacuate flange approximately one 1 square inch of material to be analyzed. Remove paint, protective coating, or any bonding material to present a clean sample.

4.7.12.2 Test procedure. Perform a hardness test on each sample. Following the hardness test, place each sample individually into an arc emission spectrometer interconnected with the computer interface and printer. Perform an arc emission spectrometry test on each sample and retrieve a data printout.

5. PACKAGING

5.1 Packaging. For acquisition purposes, the packaging requirements shall be as specified in the contract or order (see 6.2). When actual packaging of material is to be performed by DOD personnel, these personnel need to contact the responsible packaging activity to ascertain the requisite packaging requirements. Packaging requirements are maintained by the Inventory Control Point's packaging activity within the Military Department or Defense Agency, or within the Military Department's System Command. Packaging data retrieval is available from the managing Military Department's or Defense Agency's automated packaging files, CD-ROM products, or by contracting the responsible packaging activity.

6. NOTES

Downloaded from http://www.everyspec.com

(This section contains information of a general or explanatory nature that may be helpful, but is not mandatory.)

6.1 Intended use. The bladders covered by this specification are intended for use with the C130 and C-141 aircraft.

6.2 Acquisition requirements. Acquisition documents should specify the following:

a. Title, number, and date of this specification

b. Issue of DODISS to be cited in the solicitation, and if required, the specific issue of individual documents referenced (see 2.1 and 2.2).

c. When first article is required (see 3.1).

d. Any additional testing requirements.

e. Packaging requirements.

6.3 First Article. When first article inspection is required, the contracting officer should provide specific guidance to offerors whether the item(s) should be a preproduction, a first article sample, a sample selected from the first 25 production items, a standard production item from the contractor's current inventory (see 3.1), and the number of items to be tested as specified in 4.4. The contracting officer should also include specific instructions in acquisition documents regarding arrangements for examinations, approval of first article test results and disposition of the first articles. Invitation for bids should provide that the Government reserves the right to waive the requirement for samples for first article inspection to those bidders offering a product which has been previously acquired or tested by the Government, and that bidders offering such products, who wish to rely on such production or test, must furnish evidence with the bid that prior Government approval is presently appropriate for the pending contract. Bidders should not submit alternate bids unless specifically requested to do so in the solicitation.

6.4 Subject term (key word) listing.

Aerial Bulk Fuel
Bladder
Bladder, Fuel
Bulk Fuel
Fuel Delivery System

6.5 Acronyms/abbreviations. This is a listing of acronyms/abbreviations used in this specification.

ABFDS	Aerial Bulk Fuel Delivery System
ATP	Acceptance Test Procedure
gpm	Gallons Per Minute
NBR	Acrylonitrile-Butadiene Rubber
NIST	National Institute of Science and Technology
psig	Pounds Per Square Inch Gauge

Downloaded from http://www.everyspec.com

RH	Relative Humidity
UNS	Unified Numbering System

6.6 Definitions. This is a listing of definitions of terms used in this specification.

Blister. A blister is a void or hole, which causes protrusion on surface when hot, may not show on surface when cold, and may be covered or open.

Burr. A burr is a rough edge left on a piece of metal by a cutting or punching tool.

Checking. Checking in coating fabrics shall be defined as fine crackings appearing in the coating compound.

g. A "g" is a unit of acceleration equal to the acceleration due to gravity. It is expressed as a multiple of the unit's weight.

Holiday. A holiday in coated fabrics shall be defined as a place not covered by coating compound.

Mils. A mil is a unit of length equal to 1/1000 inch.

Pinhole. A pinhole shall be defined as minute circular void or solvent blow hole.

Rework. Rework shall be defined as an operation performed during a production operation due to an inadequacy or error during that operation.

Repair. Repair shall be defined as a corrective operation which is required because of an omission of a step or incorrect performance of a step or process during a previously completed manufacturing operation.

Wicking. Wicking in coated fabrics shall be defined as the absorption of fuel by capillary attraction.

Downloaded from http://www.everyspec.com

Custodian:
Air Force 99

Preparing activity:
Air Force 82

Agent activity:
Air Force 99

(Project 5430-F230)

Downloaded from http://www.everyspec.com

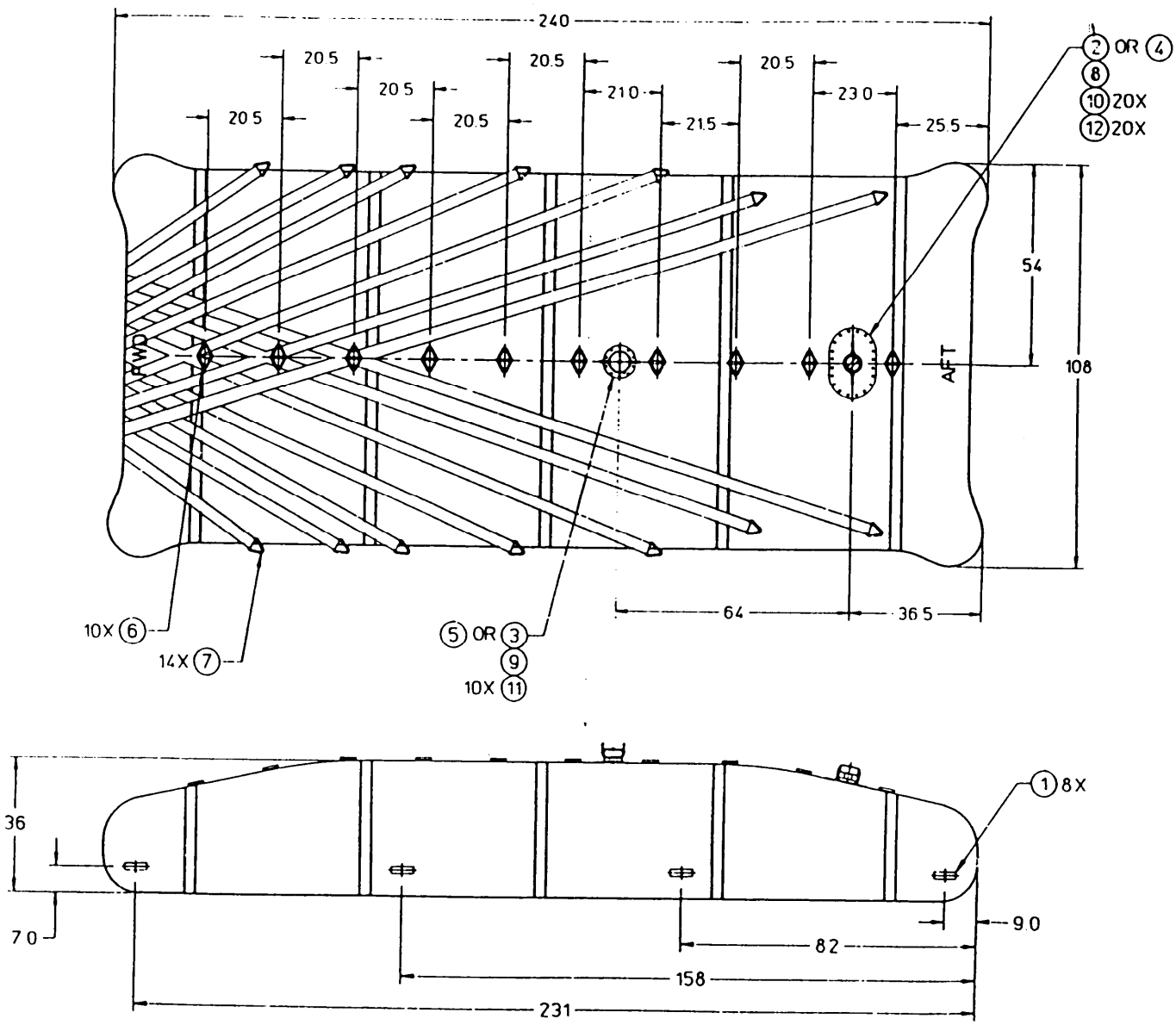

1 ALL DIMENSIONS ARE IN INCHES.
TOLERANCES: DECIMALS
XXX. = ±4
XX. = ±2
X.X = ±.5

2 BLADDER SHOWN FILLED TO NORMAL CAPACITY.

3 APPROXIMATE DIMENSIONS OF BLADDER IN UNFILLED CONDITION: 235 X 100 X 4.

4. SHAPE OF CORNERS OPTIONAL.

NOTE: ITEMS 4 AND 5 ARE USED FOR SHIPPING ONLY

QTY REQD	FSCM	PART OR IDENTIFYING NO.	NOMENCLATURE OR DESCRIPTION	MATERIAL SPECIFICATION	ITEM NO.
20		MS15795-810	WASHER		12
10		MS24693-C295	SCREW		11
20		MS35308-306	SCREW		10
1		FIGURE 10	VENT NOZZLE		9
1		FIGURE 9	FILL / EVACUATE NZL		8
16		FIGURE 8	"O" RING		7
10		FIGURE 7	DOUBLE "O" RING		6
1		FIGURE 6	VENT FLANGE CLOSURE PLATE		5
1		FIGURE 5	FILL/EVACUATE FLG CLOSURE PLATE		4
1		FIGURE 4	VENT FLANGE		3
1		FIGURE 3	FILL / EVACUATE FLG		2
8		FIGURE 2	LIFT HANDLE		1
		-10	BLADDER ASSY		

LIST OF MATERIALS

Figure 1. Bladder assembly

Downloaded from http://www.everyspec.com

NOTES

1 ALL DIMENSIONS ARE IN INCHES.

2 NBR DESIGNATES ACRYLONITRILE BUTADIENE RUBBER.

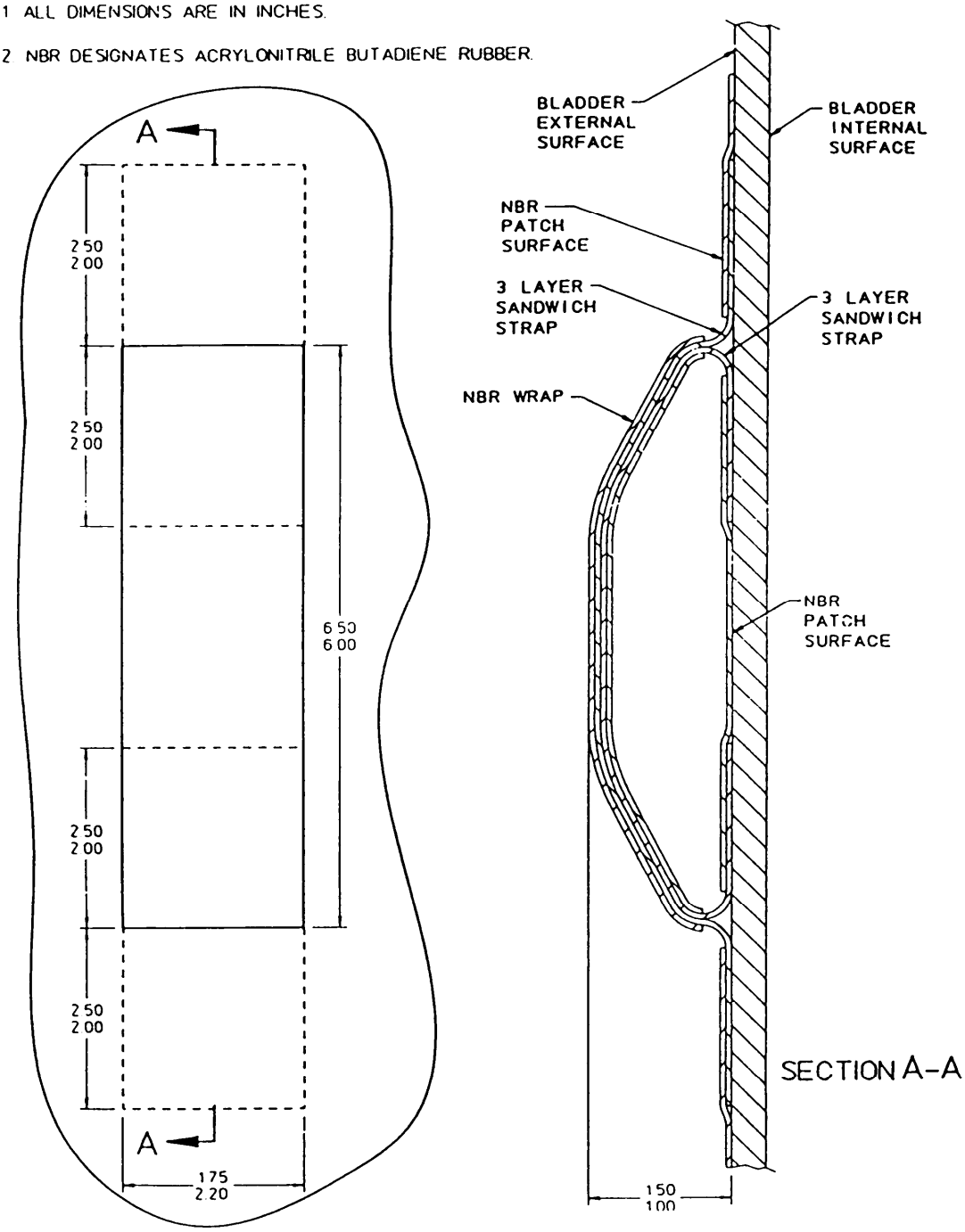

Figure 2. Lift handle

Downloaded from http://www.everyspec.com

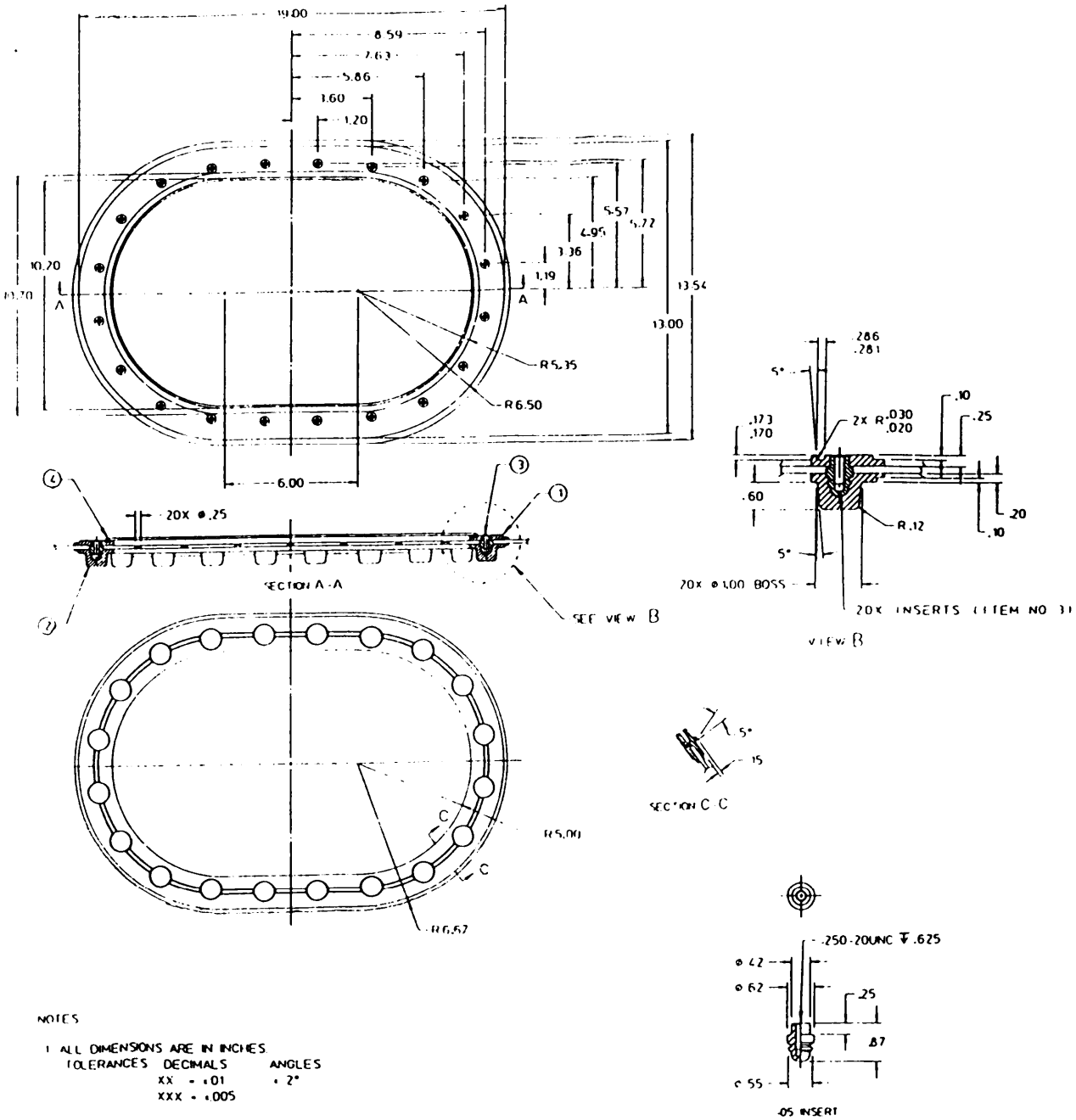

NOTES

1. ALL DIMENSIONS ARE IN INCHES.
   TOLERANCES DECIMALS ANGLES
   XX = ±.01 ± 2°
   XXX = ±.005

2. ANODIZE ALUMINUM ALLOY PARTS IN ACCORDANCE WITH MIL-A-8625, TYPE II, OR CHEMICAL CONVERSION COAT IN ACCORDANCE WITH MIL-C-5541, CLASS 1A. COLOR SHALL APPROXIMATE THE COLOR OF THE BLADDER FABRIC

QTY REQD	FSCM	PART OR IDENTIFYING NO	NOMENCLATURE OR DESCRIPTION	MATERIAL SPECIFICATION	ITEM NO.
1		MS9021-383	O-RING SEAL		4
20		-05	INSERT	STAINLESS STEEL, ASTM A276-304L	3
1		-03	PLATE, LOWER	ALUMINUM 6061-T6	2
1		-01	PLATE, UPPER	ALUMINUM 6061-T6	1
		-10	FILL / EVACUATE FLG		

LIST OF MATERIALS

Figure 3. Fill/evacuate flange

Downloaded from http://www.everyspec.com

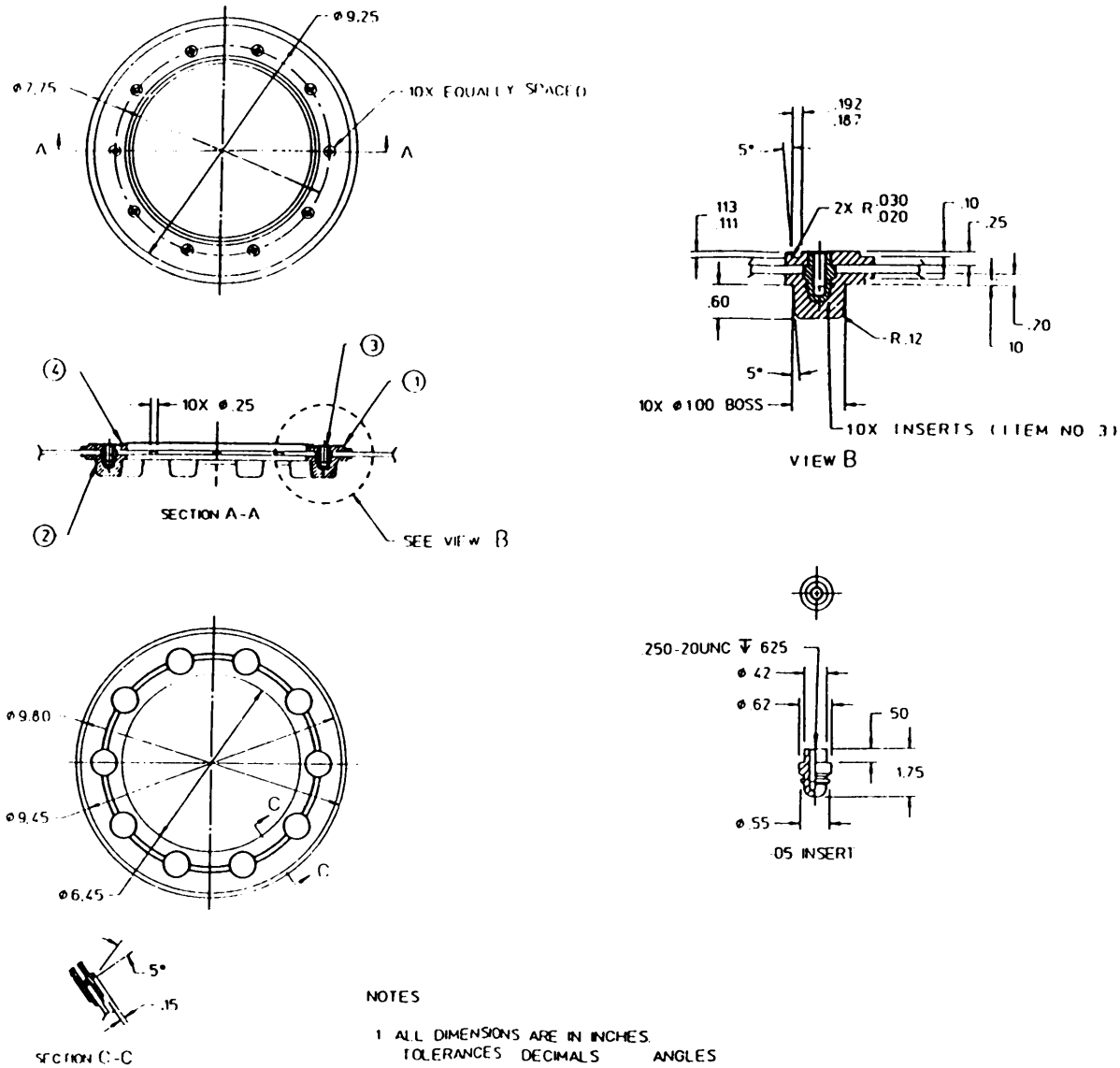

NOTES

1. ALL DIMENSIONS ARE IN INCHES.
   TOLERANCES DECIMALS ANGLES
   XX ± .01 ± 2°
   XXX ± .005

2. ANODIZE ALUMINUM ALLOY PARTS IN ACCORDANCE WITH MIL-A-8625, TYPE II, OR CHEMICAL CONVERSION COAT IN ACCORDANCE WITH MIL-C-5541, CLASS 1A. COLOR SHALL APPROXIMATE THE COLOR OF THE BLADDER FABRIC.

QTY REQD	FSCM	PART OR IDENTIFYING NO.	NOMENCLATURE OR DESCRIPTION	MATERIAL SPECIFICATION	ITEM NO.
1		MS29513-261	O-RING, SEAL		4
10		-05	INSERT	STAINLESS STEEL, ASTM A276-304L	3
1		-03	PLATE, LOWER	ALUMINUM 6061-T6	2
1		-01	PLATE, UPPER	ALUMINUM 6061-T6	1
		-10	VENT FLANGE		

LIST OF MATERIALS

Figure 4. Vent flange

Downloaded from http://www.everyspec.com

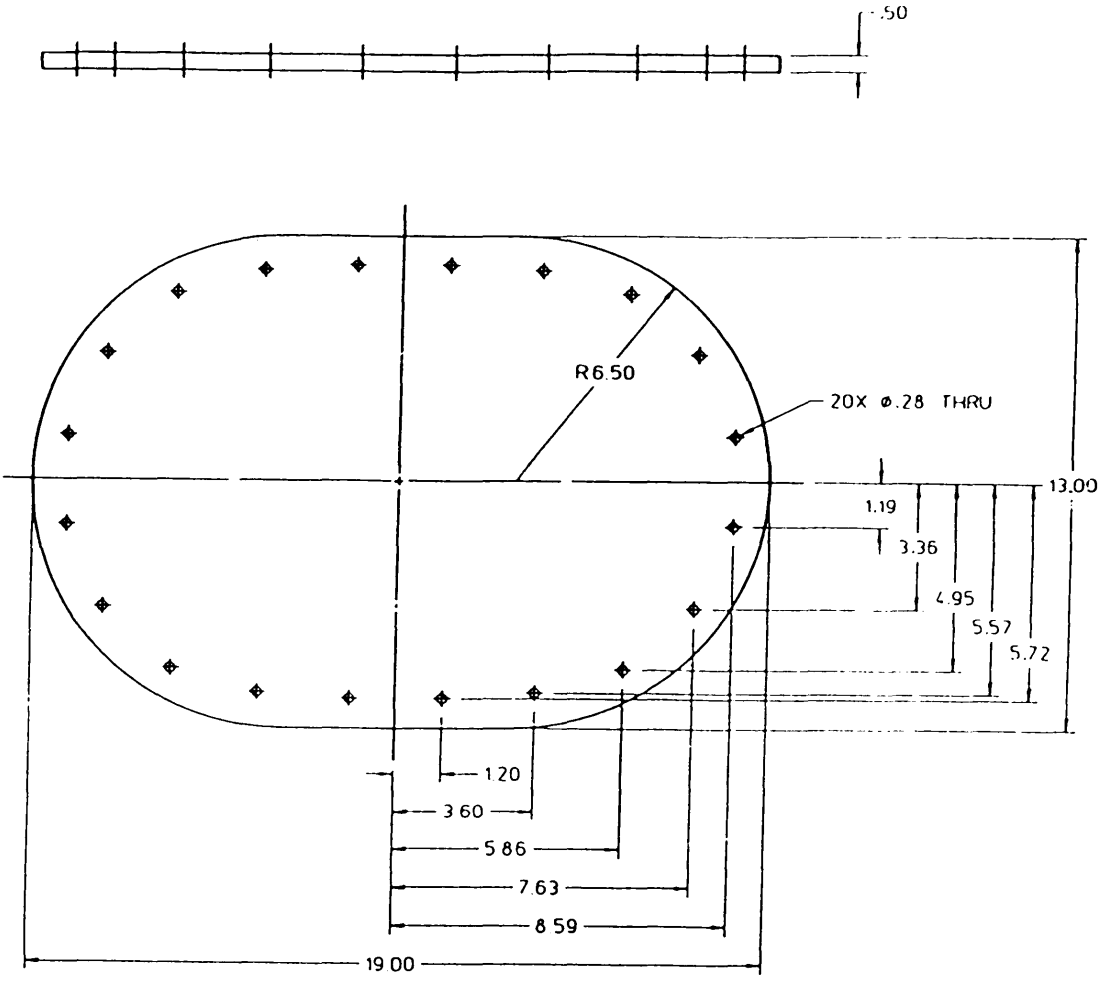

NOTES:

1. ALL DIMENSIONS ARE IN INCHES.
   TOLERANCES: DECIMALS
   XX = ±.01

2. ANODIZE ALUMINUM ALLOY PARTS IN ACCORDANCE WITH MIL-A-8625, TYPE II, OR CHEMICAL CONVERSION COAT IN ACCORDANCE WITH MIL-C-5541, CLASS 1A. COLOR SHALL APPROXIMATE THE COLOR OF THE BLADDER FABRIC.

		-01	FILL/EVACUATE FLANGE CLOSURE PLATE	ALUMINUM 6061-T6, PLATE	
QTY REQD	FSCM	PART OR IDENTIFING NO.	NOMENCLATURE OR DESCRIPTION	MATERIAL SPECIFICATION	ITEM NO.
LIST OF MATERIALS					

Figure 5. Fill/evacuate flange closure plate

Downloaded from http://www.everyspec.com

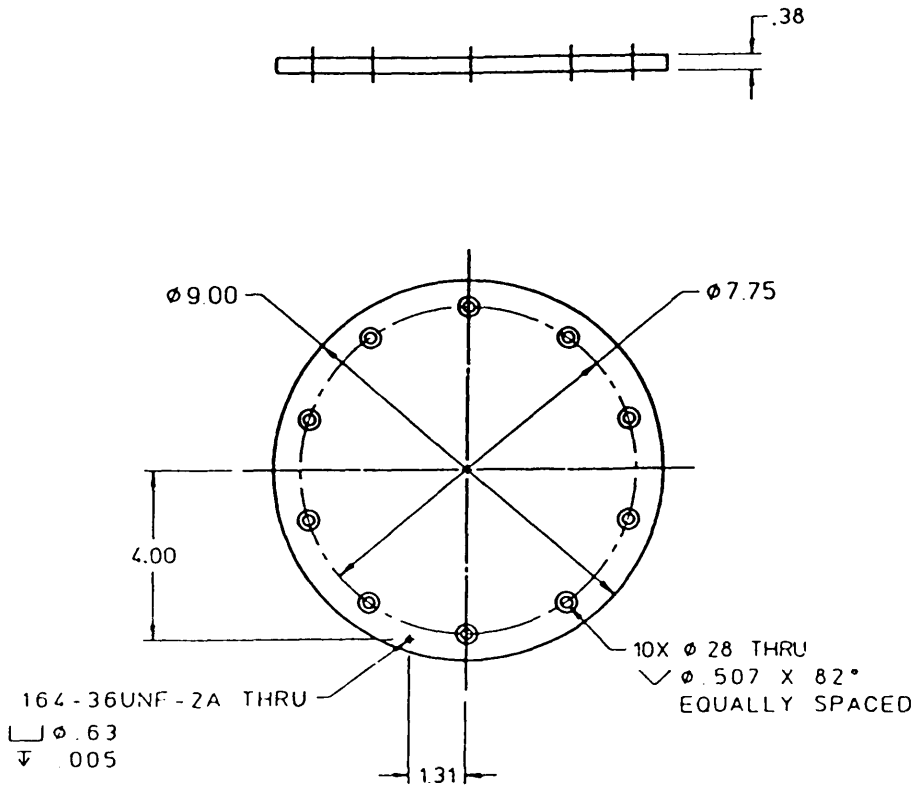

NOTES

1 ALL DIMENSIONS ARE IN INCHES.
TOLERANCES: DECIMALS ANGLES
.XX = ±.01 ± 2°
.XXX = ±.005

2. ANODIZE ALUMINUM ALLOY PARTS IN ACCORDANCE WITH MIL-A-8625, TYPE II, OR CHEMICAL CONVERSION COAT IN ACCORDANCE WITH MIL-C-5541, CLASS 1A. COLOR SHALL APPROXIMATE THE COLOR OF THE BLADDER FABRIC.

		-01	VENT FLANGE CLOSURE PLATE	ALUMINUM 6061-T6, PLATE	
QTY REQD	FSCM	PART OR IDENTIFING NO.	NOMENCLATURE OR DESCRIPTION	MATERIAL SPECIFICATION	ITEM NO.
LIST OF MATERIALS					

Figure 6. Vent flange closure plate

Downloaded from http://www.everyspec.com

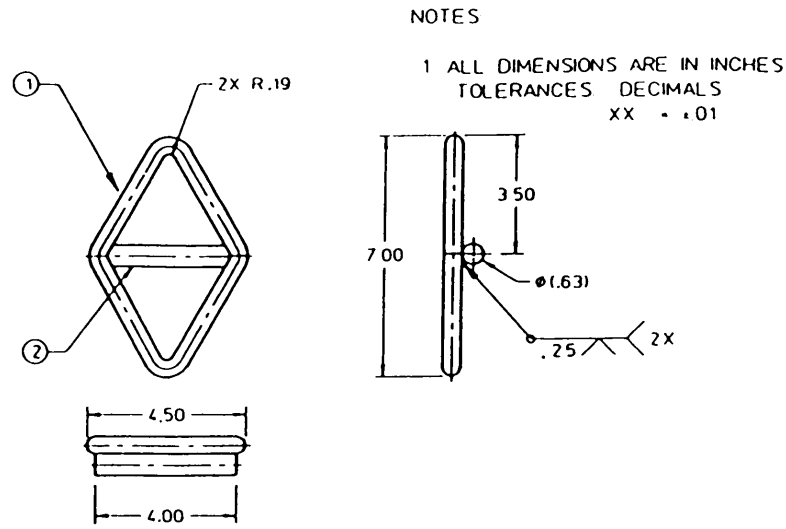

1		-03	ROD, ROUND	ø .63 STAINLESS STEEL ASTM A276-304L	2
1		-01	ROD, ROUND	ø .50 STAINLESS STEEL ASTM A276-304L	1
		-10	DOUBLE 'D' RING		
QTY REQD	FSCM	PART OR IDENTIFING NO.	NOMENCLATURE OR DESCRIPTION	MATERIAL SPECIFICATION	ITEM NO.
LIST OF MATERIALS					

Figure 7. Double "D" ring

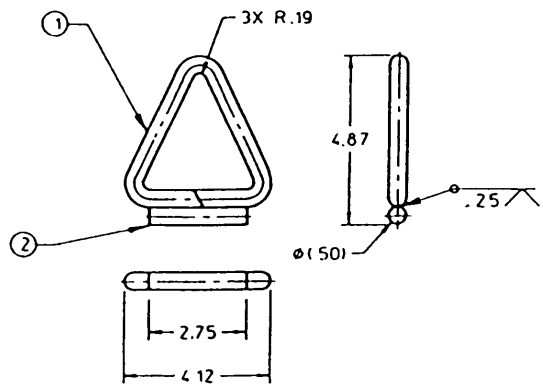

1		-03	ROD, ROUND	ø.50 STAINLESS STEEL ASTM A276-304L	2
1		-01	ROD, ROUND	ø.50 STAINLESS STEEL ASTM A276-304L	1
		-10	'D' RING		
QTY REQD	FSCM	PART OR IDENTIFING NO.	NOMENCLATURE OR DESCRIPTION	MATERIAL SPECIFICATION	ITEM NO.
LIST OF MATERIALS					

Figure 8. "D" ring (forward restraint harness)

Downloaded from http://www.everyspec.com

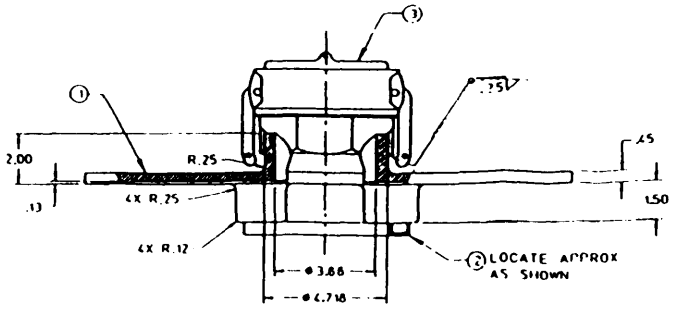

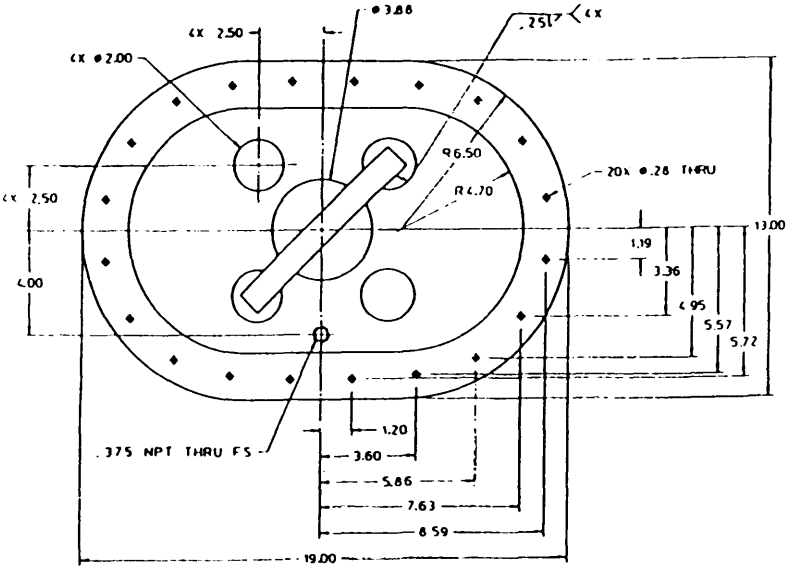

NOTES

1. ALL DIMENSIONS ARE IN INCHES.
   TOLERANCES DECIMALS
   XX = ±.01
   XXX = ±.005

2. ANODIZE ALUMINUM ALLOY PARTS IN ACCORDANCE WITH MIL-A-8625, TYPE II, OR CHEMICAL CONVERSION COAT IN ACCORDANCE WITH MIL-C-5541, CLASS 1A. COLOR SHALL APPROXIMATE THE COLOR OF THE BLADDER FABRIC.

QTY REQD	FSCM	PART OR IDENTIFYING NO.	NOMENCLATURE OR DESCRIPTION	MATERIAL SPECIFICATION	ITEM NO.
1		MS27024-18	COUPLING HALF, CAP, DUST		3
1		-03	CHANNEL	ALUMINUM 6061-T52 1 X .5 X .12 X 8 LG	2
1		-01	PLATE	ALUMINUM 6061-T6	1
		-10	FILL/EVACUATE NOZZLE		

LIST OF MATERIALS

Figure 9. Fill/evacuate nozzle

Downloaded from http://www.everyspec.com

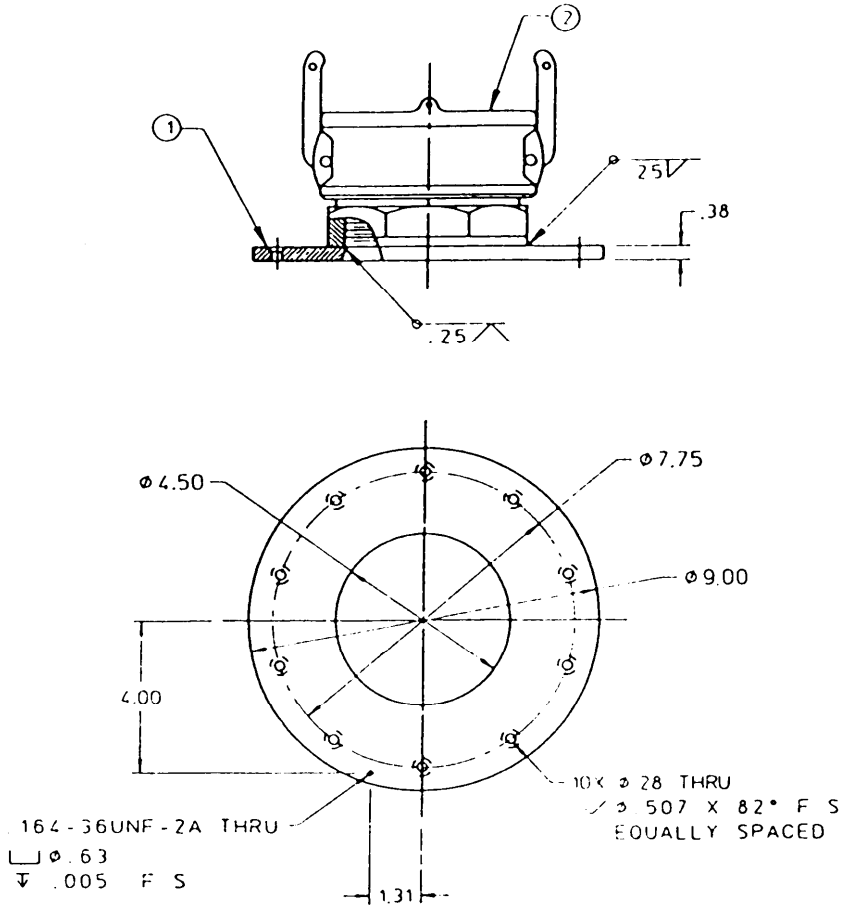

NOTES

1. ALL DIMENSIONS ARE IN INCHES.
   TOLERANCES: DECIMALS ANGLES
   XX = ±.01 ± 2°
   XXX = ±.005

2. ANODIZE ALUMINUM ALLOY PARTS IN ACCORDANCE WITH MIL-A-8625, TYPE II, OR CHEMICAL CONVERSION COAT IN ACCORDANCE WITH MIL-C-5541, CLASS 1A. COLOR SHALL APPROXIMATE THE COLOR OF THE BLADDER FABRIC.

QTY REQD.	FSCM	PART OR IDENTIFING NO.	NOMENCLATURE OR DESCRIPTION	MATERIAL SPECIFICATION	ITEM NO.
1		MS27028-18	COUPLING HALF, CAP DUST		2
1		-01	PLATE	ALUMINUM 6061-T6	1
		-10	VENT NOZZLE		

LIST OF MATERIALS

Figure 10. Vent nozzle