Downloaded from http://www.everyspec.com

METRIC
MIL-DTL-83527B
15 July 2003
SUPERSEDING
MIL-C-83527A
28 December 1988

DETAIL SPECIFICATION

CONNECTORS, PLUG AND RECEPTACLE, ELECTRICAL, RECTANGULAR MULTIPLE INSERT TYPE, RACK TO PANEL, ENVIRONMENT RESISTING, 150°C TOTAL CONTINUOUS OPERATING TEMPERATURE, GENERAL SPECIFICATION FOR

This specification is approved for use by all Departments and Agencies of the Department of Defense.

1. SCOPE

1.1 Scope. This specification covers the requirements, quality assurance criteria and test procedures for the design and fabrication of an environment resisting low insertion force, multiple insert rectangular connector. The low electrical/electronic bay areas of military aircraft. The connector will provide the electrical interface between the avionics equipment and the equipment rack or tray.

1.2.1 Part or Identifying Number (PIN). The PIN consist of the letter "M", the basic number of the specification sheet, and an assigned dash number as shown in the following example:

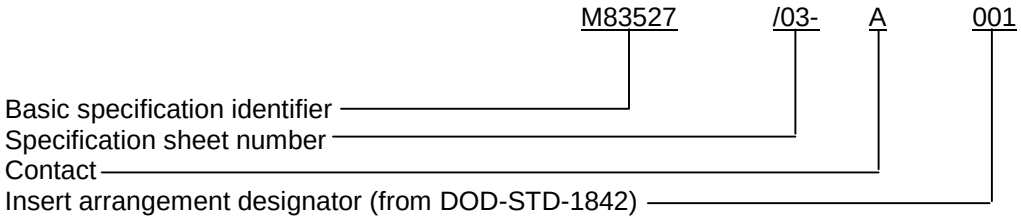

1.2.2. Class and series. The connector class will be identified as follows:

Class R - Environment resisting connector for continuous operation within the temperature limits of -65°C to +150°C.

1.2.1.1 Contacts. When ordering the complete connector with contacts, a designator “A” will be used, and when ordering without contacts, a designator “B” will be used.

1.2.1.2 Insert. When ordering the complete military part or identifying number with insert pattern, use DOD-STD-1842. When ordering the insert pattern only, use MIL-C-83527/7 (plug) and MIL-C-83527/8 (receptacle).

Beneficial comments (recommendations, additions, deletions) and any pertinent data which may be of use in improving this document should be addressed to: Commander, Defense Supply Center Columbus, Attn: VAI, 3990 East Broad Street, Columbus, Ohio, 43216-5000 by using the Standardization Document Improvement Proposal (DD Form 1426) appearing at the end of this document or by letter.

AMSC N/A FSC 5935
DISTRIBUTION STATEMENT A. Approved for public release; distribution is unlimited.

Downloaded from http://www.everyspec.com

2. APPLICABLE DOCUMENTS

2.1 General. The documents listed in this section are specified in sections 3 and 4 of this specification. This section does not include documents cited in other sections of this specification or recommended for additional information or as examples. While every effort has been made to ensure the completeness of this list, document users are cautioned that they must meet all specified requirements documents cited in sections 3 and 4 of this specification, whether or not they are listed.

2.2 Government documents.

2.2.1 Specifications, standards, and handbooks. The following specifications, standards, and handbooks form a part of this document to the extent specified herein. Unless otherwise specified, the issues of these documents are those listed in the issue of the Department of Defense Index of Specifications and Standards (DODISS) and supplement thereto, cited in the solicitation (see 6.3).

SPECIFICATIONS

FEDERAL

VV-D-1078 - Damping Fluid, Silicone Base (Dimethylpolysiloxane).

DEPARTMENT OF DEFENSE

MIL-C-17 - Cables, Radio Frequency, Flexible and Semirigid, General Specification for.
MIL-DTL-22520 - Crimping Tools, Wire Termination, General Specification for.
MIL-W-22759/33 - Wire, Electrical, Fluoropolymer-Insulated, Crosslinked Modified ETFE, Lightweight, Silver-Coated, High-Strength Copper Alloy, 200 DEG. C, 600 Volt.
MIL-W-22759/43 - Wire, Electrical, Fluoropolymer-Insulated, Crosslinked Modified ETFE, Normal Weight, Silver-Coated Copper, 200 DEG. C, 600 Volt.
MIL-M-24519 - Molding Plastics, Electrical, Thermoplastic.
MIL-C-39029 - Contacts, Electrical Connector, General Specification for.
MIL-C-39029/93 - Contacts, Electrical Connector, Socket, Crimp Removable, (For DOD-C-83527 Connector).
MIL-C-39029/94 - Contacts, Electrical Connector, Pin, Crimp Removable, (For DOD-C-83527 Connector).
MIL-C-39029/97 - Contacts, Electrical Connector, Pin, Crimp Removable, Coaxial, Size 1 (For DOD-C-83527 Connectors).
MIL-C-39029/98 - Contacts, Electrical Connector Socket, Crimp Removable, Coaxial, Size 1 (For DOD-C-83527 Connectors).
MIL-C-39029/99 - Contacts, Electrical Connector Pin, Crimp Removable, Coaxial Size 5 (For DOD-C-83527 Connectors).
MIL-C-39029/100 - Contacts, Electrical Connector, Socket, Crimp Removable, Coaxial, Size 5 (For DOD-C-83527 Connectors).
MIL-I-81969 - Installing and Removal tools, Connector Electrical Contact, General Specification for.
MIL-C-85049 - Connector Accessories, Electrical, General Specification for.

(See supplement 1 for list of associated specifications.)

Downloaded from http://www.everyspec.com

STANDARDS

DEPARTMENT OF DEFENSE

MIL-STD-202	-	Electronic and Electrical Component Parts.
MIL-STD-889	-	Dissimilar Metals.
MIL-STD-1285	-	Marking of Electrical and Electronic Parts.
DOD-STD-1842	-	Insert Arrangements for DOD-C-83527 Rack to Panel Connectors (Metric).
MS27488	-	Plug, End Seal, Electrical Connector.

(Unless otherwise indicated, copies of the above specifications, standards, and handbooks are available from the Defense Printing Service Detachment Office, Standardization Document Order Desk, Building 4D Customer Service, 700 Robbins Avenue, Philadelphia, PA 19111-5094.)

2.3 Non-Government publications. The following documents form a part of this document to the extent specified herein. Unless otherwise specified, the issues of the documents which are DoD adopted are those listed the issue of the DODISS cited in the solicitation. Unless otherwise specified, the issues of documents not listed in the DODISS are the issues of the document cited in the solicitation (see 6.3).

AMERICAN NATIONAL STANDARDS INSTITUTE, INC.

ANSI-Z540.1	-	Laboratories, Calibration, and Measuring and Test Equipment.

(Application for copies should be addressed to the American National Standards Institute, 25 West 43rd Street, 4th Fl, New York, NY 10036).

AMERICAN SOCIETY FOR TESTING AND MATERIALS (ASTM)

ASTM D570	-	Water Absorption of Plastics.
ASTM D5948	-	Compounds, Molding, Thermosetting.
ASTM G21	-	Materials to Fungi, Synthetic Polymeric, Determining Resistance of.

(Application for copies should be addressed to the American Society for Testing and Materials, 100 Barr Harbor Drive, West Conshohocken, PA 19428-2959.)

ELECTRONIC INDUSTRY ALLIANCE (EIA)

EIA-364	-	Electrical Connector/Socket Test Procedures Including Environmental Classifications.

(Applications for copies should be addressed to the Electronic Industry Alliance, Corporate Engineering Department, 2500 Wilson Blvd., Arlington, VA 22201.)

Downloaded from http://www.everyspec.com

SOCIETY OF AUTOMOTIVE ENGINEERS (SAE)

SAE-AMS-QQ-A-250	-	Aluminum and Aluminum Alloy, Plate and Sheet.
SAE-AMS-QQ-A-367	-	Aluminum Alloy Forgings.
SAE-AMS-QQ-A-591	-	Aluminum Alloy Die Castings.
SAE-AMS-QQ-N-290	-	Nickel Plating (Electrodeposited).
SAE-AMS-QQ-P-416	-	Plating, Cadmium (Electrodeposited).
SAE-AMS-STD-2175	-	Casting, Classification and Inspection of.

(Application for copies should be addressed to the Society of Automotive Engineers, 400 Commonwealth Drive, Warrendale, PA 15096-0001.)

2.4 Order of precedence. In the event of a conflict between the text of this document and the references cited herein (except for related associated specifications, specification sheets or MS standards), the text of this document takes precedence. Nothing in this document, however, supersedes applicable laws and regulations unless a specific exemption has been obtained.

3. REQUIREMENTS

3.1 Specification sheets. The individual item requirements shall be as specified herein and in accordance with the applicable specification sheets. In the event of any conflict between the requirements of this specification and the specification sheet, the latter shall govern.

3.1.2 Alternate materials, platings, and processes. The identified reference materials, platings, and processes have been established to provide assurances that connectors manufactured to this specification will properly interface to similar industry standard or government specified component interconnection systems without problems of electrochemical contamination of critical electrical or mechanical interfaces or generation of incompatible mechanical interface surface wear products. The manufacturers of connectors supplied to this specification are allowed to use alternate recognized industry standards for materials, platings, and processes. Alternate materials, platings, and processes used shall be coordinated with the procuring activity as part of the first article process. Use of alternates to those referenced guidance items by the supplier shall not result in inferior short or long-term performance or reliability of supplied connectors as compared with connectors manufacture using the referenced materials, platings, or processes. Short or long term failures or reliability problems due to use of these alternates shall be the responsibility of the supplier.

3.1.3 Recycled, recovered, or environmentally preferable materials. Recycled, recovered, or environmentally preferable materials should be used to the maximum extent possible provided that the material meets or exceeds the operational and maintenance requirements, and promotes economically advantageous life cycle costs.

3.1.4 Restricted material.

3.1.4.1 Pure tin. The use of pure tin is prohibited see 6.2.1. The maximum amount of pure tin is 97 percent and the alloy material shall inhibit the growth of tin whiskers.

3.1.5 Hydrolytic stability. All nonmetallic material shall be selected to meet the hydrolytic reversion resistance in accordance with ASTM D570 (see 4.5.2).

3.1.6. Fungus resistance. Materials used in the construction of these connectors shall be fungus inert in accordance with ASTM G21 (see 4.5.3).

Downloaded from http://www.everyspec.com

3.2 First article. When specified (see 6.3) connectors and contacts furnished under this specification shall be subjected to first article inspection in accordance with 4.3.

3.3 Materials. Example reference materials are identified herein. However, when an example reference material is not identified, a material shall be used which will enable the connectors and accessories to meet the performance requirements of this specification. Acceptance or approval of a constituent material shall not be construed as a guaranty of acceptance of the finished product.

3.3.1 Metals. Metals shall be of a corrosion-resistant type or shall be plated or treated to resist corrosion.

3.3.1.1 Dissimilar metals and compatible couples. When dissimilar metals are used in intimate contact with each other, protection against electrolysis and corrosion shall be provided. The use of dissimilar metals in contacts, which tend toward active electrolytic corrosion (particularly brass, copper, or steel used in contact with aluminum alloy), is not acceptable. However, metal plating or metal spraying is permitted. The use of dissimilar metals separated by a suitable insulating material is also permitted. Dissimilar metals and compatible couples are defined in MIL-STD-889.

3.3.2 Shell material. Unless otherwise specified, the shell material shall be high grade aluminum alloy in accordance with SAE-AMS-QQ-A-250, a forging alloy conforming to SAE-AMS-QQ-A-367 or die cast alloy in accordance with SAE-AMS-QQ-A-591, composition number 13, A13, 380, A380, or SC114A. When casting process is used, casting shall be inspected to meet SAE-AMS-STD-2175, class 3, grade C or better.

3.3.3 Rigid insert material. Rigid insert material shall be selected from glass fiber filled diallyl phthalate in accordance with ASTM D5948, type SDG-F or nonflammable thermoplastic in accordance with MIL-M-24519. Alternate materials may be used provided they exhibit stability when exposed to long term high temperature and high humidity conditions and meet the performance requirements specified herein.

3.3.4 Resilient insert material. Resilient material shall be a high-grade fluorosilicone, high-grade silicone, or fluorocarbon elastomer and shall be capable of meeting the performance requirements of this specification.

3.3.5 Finish. All metal parts shall be made of corrosion-resistant materials or be protected to meet the performance requirements of this specification.

a. The shell and backshell hardware shall have cadmium plate in accordance with SAE-AMS-QQ-P-416 over a suitable underplate to withstand 500-hour salt spray test.

b. Final finish shall be electrically conductive and shall be light to dark in color.

3.3.6 Shielding effectiveness. Manufacturer is to evaluate for shielding effectiveness (see 3.5.19). Connector will meet electromagnetic interference (EMI) requirements stated herein and be intermateable with other manufacturers connector.

3.4 Design and construction. Connectors shall be in accordance with figure 1 and the applicable specification sheet (see 3.1) and shall be constructed to withstand normal handling incident to installation and maintenance in service. Configuration and dimensions to ensure intermateability shall be in accordance with the detail specification sheets. Connectors shall permit individual insertion and removal of contacts without removing the insert (see 3.5.5).

Downloaded from http://www.everyspec.com

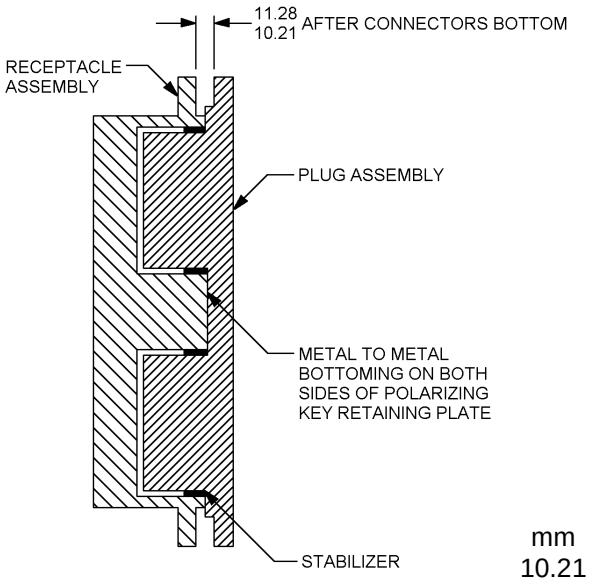

mm	Inches
10.21	.402
11.28	.444

NOTES:
1. Dimensions are in millimeters.
2. Inch equivalents are given for information only.

FIGURE 1. Shell mating condition.

3.4.1 Contacts. Unless otherwise specified (see 3.1), contacts shall be designed for crimp termination, rear release, and rear removal. Contacts shall be as specified in table I and in the applicable specification sheets.

TABLE I. Contacts.

Contact designator	Type
MIL-C-39029/93	Pin, crimp
MIL-C-39029/94	Socket, crimp
MIL-C-39029/97	Coaxial, pin, crimp, size 1
MIL-C-39029/98	Coaxial, socket, crimp, size 1
MIL-C-39029/99	Coaxial, pin, crimp, size 5
MIL-C-39029/100	Coaxial, socket, crimp, size 5
222190-4 (Tyco-Amp (00779)) 1/	Concentric twinax pin size 8
222191-4 (Tyco-Amp (00779)) 1/	Concentric twinax socket size 8

1/ Or equivalent type contact.

3.4.2 Tools. Installing and removal tools shall be as specified in appendix A and shall be qualified to MIL-I-81969. Crimping tools shall be as specified in appendix A and shall be qualified to MIL-C-22520. For cross-reference data (information only) on applicable contacts and tools, see appendix A.

Downloaded from http://www.everyspec.com

3.4.3 Insert. The insert assembly shall be a mono-bloc type design complete with inserts, contact retention members, and appropriate seals bonded into an integral unit.

a. All parts shall be designed and constructed with proper sections and radii so that they will not chip, crack or break in assembly or other normal service.

b. The insert assembly shall be designed and constructed so as to eliminate all air paths between contact cavities and between contact cavities and shell.

c. Peripheral seal shall be lubricated in accordance with 3.4.5.5.

d. The insert assemblies shall meet the interface dimensional requirements specified on figures 2, 3, and 4.

3.4.3.1 Plug insert. Plug insert assemblies shall have rigid dielectric front face. Contact cavities shall be designed for recessed contacts (size 22 pin contacts and socket contacts for all other sizes).

3.4.3.2 Receptacle insert. Receptacle insert assemblies shall have resilient interfacial seal. Contact cavities shall be designed for exposed contacts (size 22 socket contacts and pin contacts for all other sizes).

3.4.3.3 Insert interchangeability. Connector inserts that are manufactured by one manufacturer shall be interchangeable with those manufactured by other manufacturers. The connector inserts shall be tested with an approved connector as an assembly with requirements stated herein. Inserts are not repairable, however, inserts shall be replaceable (see 3.4.3.6).

3.4.3.4. Insert retention. Retaining devices in accordance with figure 5 shall positively retain individual inserts within the connector shell. When retaining screws are used a minimum torque of .26 Nm (5.85 lbf) is required.

3.4.3.5 Contact retention. Crimp contacts shall be rear release and positively retained by the insert. The retention mechanism shall be metal and contained in the insert. The contacts shall be free of devices, which can be damaged during handling and usage.

3.4.3.6 Insert replaceability. Inserts shall be rear removable and are replaceable after removal of mechanical retainer. No tools other than a screwdriver shall be used. Apply lubrication according to instructions supplied by manufacturers.

3.4.3.7 Insert contact loading.

3.4.3.7.1. Plug inserts. Inserts for use in plugs shall have cavities capable of being loaded with socket contacts, except cavities for size 22 contacts, which shall accommodate pin contacts (see 3.1).

3.4.3.7.2 Receptacle inserts. Inserts for use in receptacles shall have cavities capable of being loaded with pin contacts, except cavities for size 22 contacts that shall accommodate socket contacts (see 3.1).

Downloaded from http://www.everyspec.com

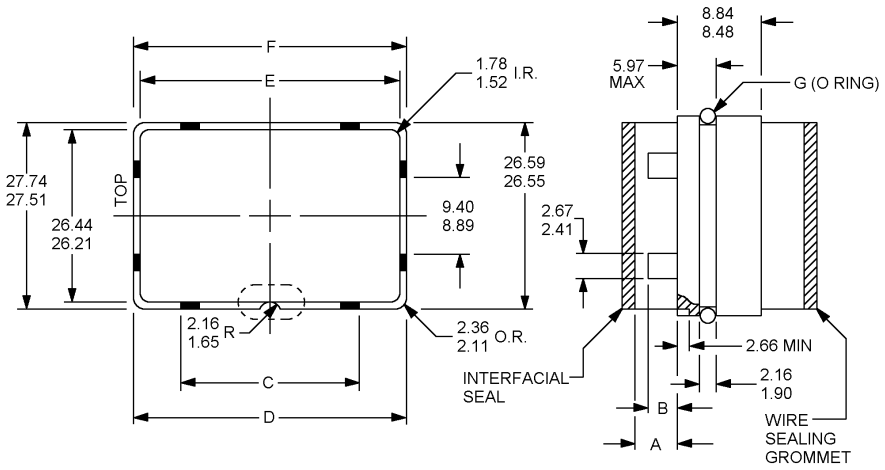

Shell style	Insert cavities	A	B	C	D	E	F	G
Plug	A, C, E	13.18 12.98	12.19 11.56	22.10	39.040	38.89	40.18	1.50 W X 35.00 I.D.
Receptacle	A, C, E	3.61 3.40	2.67 2.03	21.59	39.002	38.66	39.95	
Plug	B, D, F	13.18 12.98	12.19 11.56	9.40	27.864	27.71	29.01	1.50 W X 27.81 I.D.
Receptacle	B, D, F	3.61 3.40	2.67 2.03	8.89	27.826	27.48	28.78	

mm	Inches	mm	Inches	mm	Inches	mm	Inches	mm	Inches
1.50	.056	2.16	.085	8.84	.348	26.21	1.032	27.864	1.0970
1.52	.060	2.36	.093	8.89	.350	26.44	1.041	28.78	1.133
1.65	.065	2.41	.095	9.40	.370	26.556	1.0455	29.01	1.142
1.78	.070	2.46	.097	11.56	.455	26.594	1.0470	35.00	1.378
1.90	.075	2.62	.103	12.19	.480	27.48	1.082	38.66	1.522
2.03	.080	2.66	.105	12.98	.511	27.51	1.083	38.89	1.531
2.11	.083	2.67	.105	13.18	.519	27.71	1.091	39.002	1.5355
3.40	.134	5.97	.235	21.59	.850	27.74	1.092	39.040	1.5370
3.61	.142	8.48	.334	22.10	.870	27.81	1.095	39.95	1.573
						27.826	1.0955	40.18	1.582

NOTES:
1. Dimensions are in millimeters.
2. Inch equivalents are given for information only.
3. Interfacial seal applies to exposed contact inserts only (size 22 socket inserts or other size pin inserts.

FIGURE 2. Insert interface dimensions for high density insert with size 22 contact cavities arrangements.

Downloaded from http://www.everyspec.com

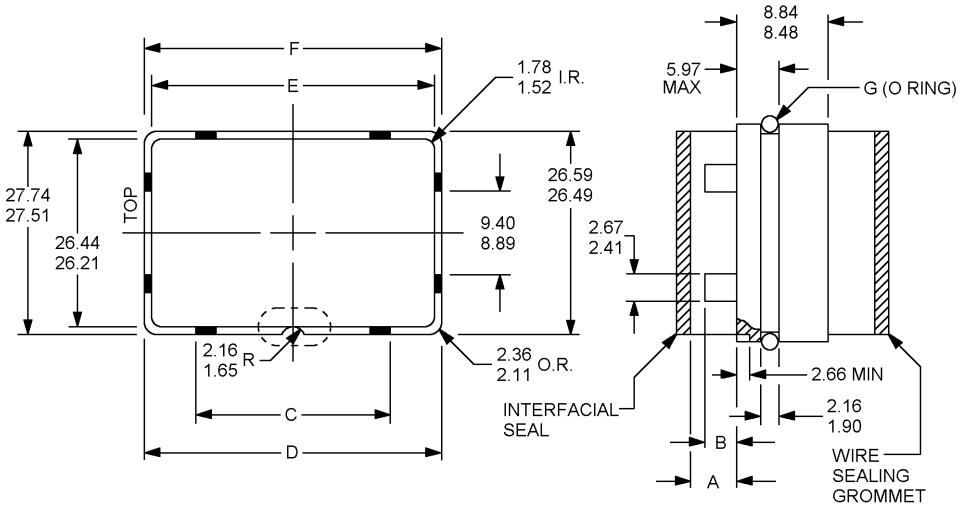

Shell style	Insert cavities	A	B	C	D	E	F	G
Plug	A, C, E	15.65 15.44	12.19 11.56	22.10	39.04	38.89	40.18	1.50 W X 35.00 I.D.
Receptacle	A, C, E	1.14 0.94	1.14 0.94	21.59	38.94	38.66	39.95	
Plug	B, D, F	15.65 15.44	12.19 11.56	9.40	27.86	27.71	29.01	1.50 W X 27.81 I.D.
Receptacle	B, D, F	1.14 0.94	1.14 0.94	8.89	27.76	27.48	28.78	

mm	Inches	mm	Inches	mm	Inches	mm	Inches	mm	Inches
0.94	.037	2.36	.093	11.56	.455	26.59	1.047	29.01	1.142
1.14	.045	2.41	.095	12.19	.480	27.48	1.082	35.00	1.378
1.50	.059	2.66	.104	15.44	.608	27.51	1.083	38.66	1.522
1.52	.060	2.67	.105	15.65	.616	27.71	1.091	38.89	1.531
1.65	.065	5.97	.235	21.59	.850	27.74	1.092	38.94	1.533
1.78	.070	8.48	.334	22.10	.870	27.76	1.093	39.04	1.537
1.90	.075	8.84	.348	26.21	1.032	27.81	1.095	39.94	1.572
2.11	.083	8.89	.350	26.44	1.041	27.86	1.097	39.95	1.573
2.16	.085	9.40	.370	26.49	1.043	28.78	1.133	40.18	1.582

NOTES:
1. Dimensions are in millimeters.
2. Inch equivalents are given for information only,
3. Interface seal applies to exposed contact inserts only (size 22)
4. Socket inserts or other size pin inserts.

FIGURE 3. Insert interface dimensions for insert arrangements without size 22 contact cavities.

Downloaded from http://www.everyspec.com

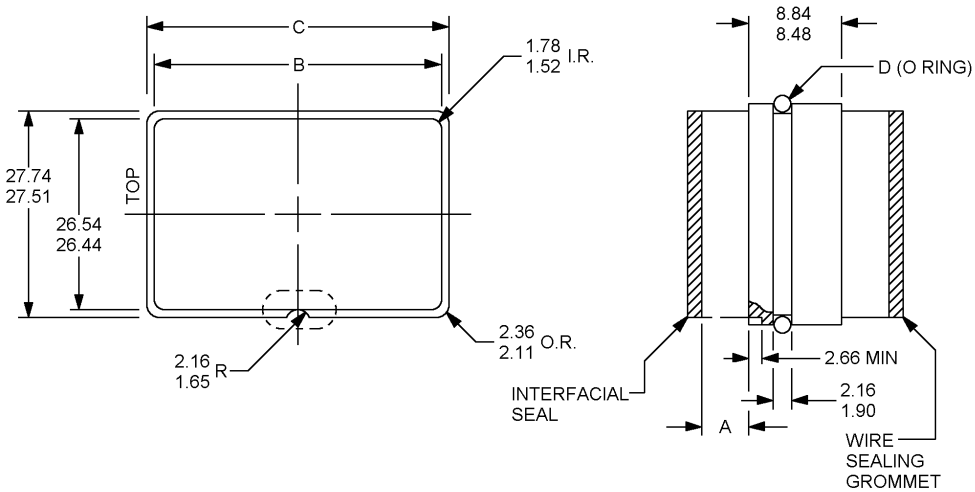

Shell style	Insert cavities	A	B	C	D
Plug	A, C, E.	15.65 15.44	38.99	40.18	1.50 W
Receptacle	A, C, E	1.14 0.94	38.86	39.95	X 35.00 I.D.
Plug	B, D, F.	15.65 15.44	27.81	29.01	1.50 W
Receptacle	B, D, F.	1.14 0.94	27.68	28.78	X 27.81 I.D.

mm	Inches	mm	Inches	mm	Inches	mm	Inches
0.94	.04	2.11	.08	15.65	.62	28.78	1.13
1.14	.04	2.16	.09	26.44	1.04	29.01	1.14
1.50	.06	2.36	.09	26.54	1.04	35.00	1.38
1.52	.06	2.66	.10	27.51	1.08	38.86	1.53
1.65	.06	8.48	.33	27.68	1.09	38.99	1.54
1.78	.07	8.84	.35	27.74	1.09	39.95	1.57
1.90	.07	15.44	.61	27.81	1.09	40.18	1.58

NOTES:
1. Dimensions are in millimeters.
2. Inch equivalents are given for information only.
3. Rib design is permissible.

FIGURE 4. Insert interface dimensions for arrangements without size 22 contact cavities (metallic insert only).

Downloaded from http://www.everyspec.com

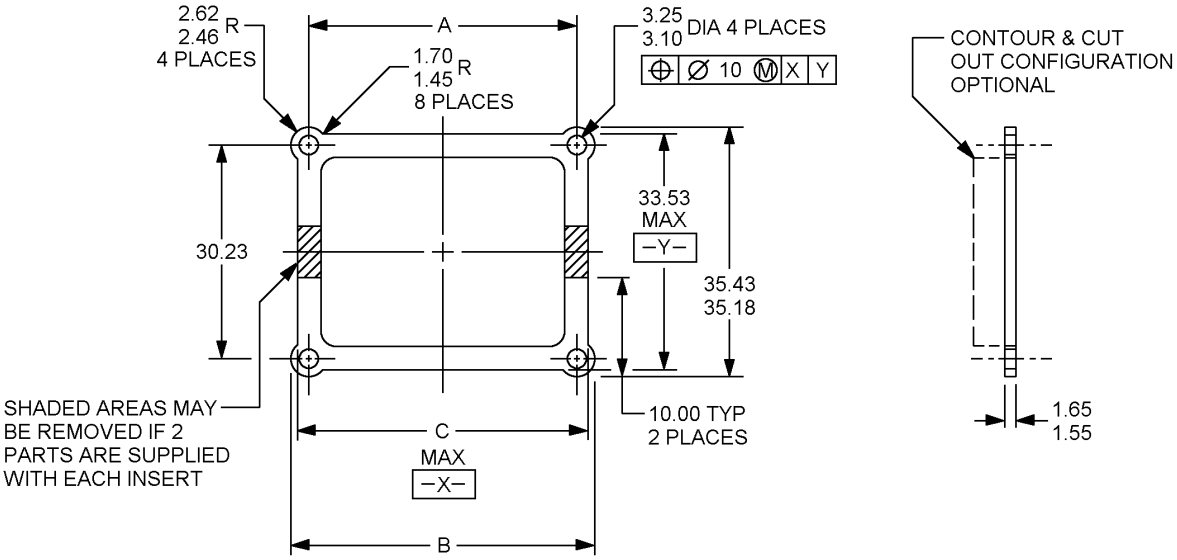

Insert cavities	A	B	C
A, C, E	44.96	50.17 49.91	45.97
B, D, F	33.78	38.99 38.74	34.80

mm	Inches	mm	Inches	mm	Inches
0.10	.004	3.10	.12	35.18	1.39
1.45	.06	3.25	.13	35.43	1.39
1.55	.06	10.00	.39	38.74	1.53
1.65	.06	30.23	1.19	38.99	1.54
1.70	.07	33.53	1.32	44.96	1.77
2.46	.10	33.78	1.33	45.97	1.81
2.62	.10	34.80	1.37	49.91	1.97
				50.17	1.98

NOTES:
1. Dimensions are in millimeters.
2. Inch equivalents are given for information only.

FIGURE 5. Insert retaining plate.

Downloaded from http://www.everyspec.com

3.4.3.8 Sealing plugs. Sealing plugs, selected from MS27488, shall be available for unused contact cavities for class R connectors.

a. Connectors shall pass all tests required herein with any quantity of the contact holes sealed with plugs. The same sealing plug shall be used in both the plug and receptacle.

b. Sealing plugs equal to 15 percent of the number of contacts, but not less than 1, shall be included in the unit package.

c. Sealing plugs shall not be supplied for coaxial contact cavities they must be obtained separately.

d. For indirect shipments (shipments to non-Government agencies), connectors may be ordered without sealing plugs (see 6.3).

3.4.3.9 Wire sealing members (rear grommet). The wire sealing member shall provide suitable sealing for overall wire diameters listed in table II and for contact sizes 22 through 12, and shall not be removable from insert assemblies.

TABLE II. Contact size and wire range accommodations.

Wire barrel	Range of outside diameter of finished wire in mm (inches)	Wire gauge range contact required to crimp
22	0.76 to 1.32 (.030) (.052)	AWG 22, 24, 26 1/
20	0.89 to 1.52 (.035) (.060)	AWG 20, 22, 24
16	1.21 to 2.03 (.048) (.080)	AWG 16, 18, 20
12	2.31 to 2.90 (.091) (.114)	AWG 12, 14
1 Coaxial (cavity size)	10.62 to 10.97 (.418) (.432)	M17/75-RG-214
5 Coaxial (cavity size)	4.85 to 5.49 (.191) (.216)	M17/28-RG-58 M17/84-RG-223
8 Concentric 2/ twinax (cavity size)	5.71 to 6.86 (.225) (.270)	M17-176-0002

1/ AWG 24 and 26 shall not be used for airframe wiring.
2/ Wire sealing for size 8 concentric twinax shall be accomplished through an intermediate sealing member.

3.4.3.10 Contact cavity and interfacial seal design.

3.4.3.10.1 Size 22 pin contact cavity. Cavities for size 22 pin contacts shall be designed to protect the contacts from protruding beyond the front face of the rigid dielectric insert. Cavity configuration shall be in accordance with figure 6.

Downloaded from http://www.everyspec.com

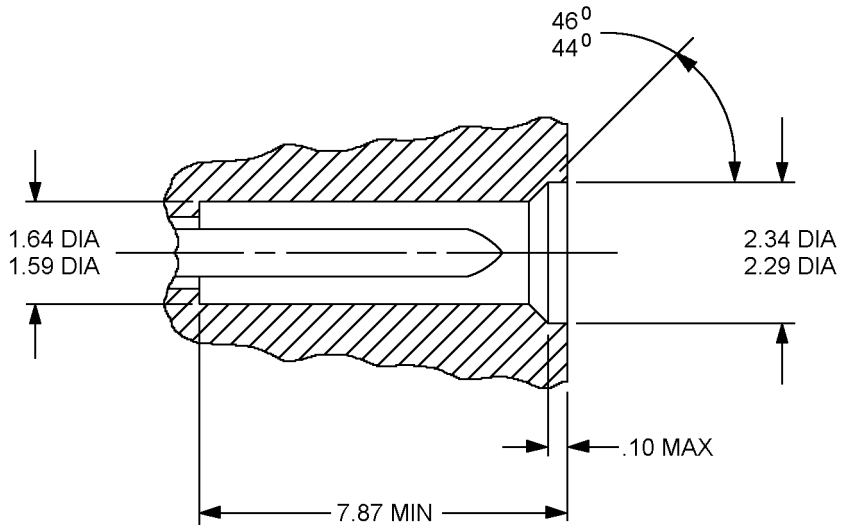

mm	Inches
0.10	.004
1.59	.063
1.64	.065
2.29	.090
2.34	.92
7.87	.310

NOTES:
1. Dimensions are in millimeters.
2. Inch equivalents are given for information only.

FIGURE 6. Size 22 pin contact cavity.

Downloaded from http://www.everyspec.com

3.4.3.10.2 Socket contact cavity. Socket contact cavity (other than for size 22 contact) shall conform to the design of figure 7.

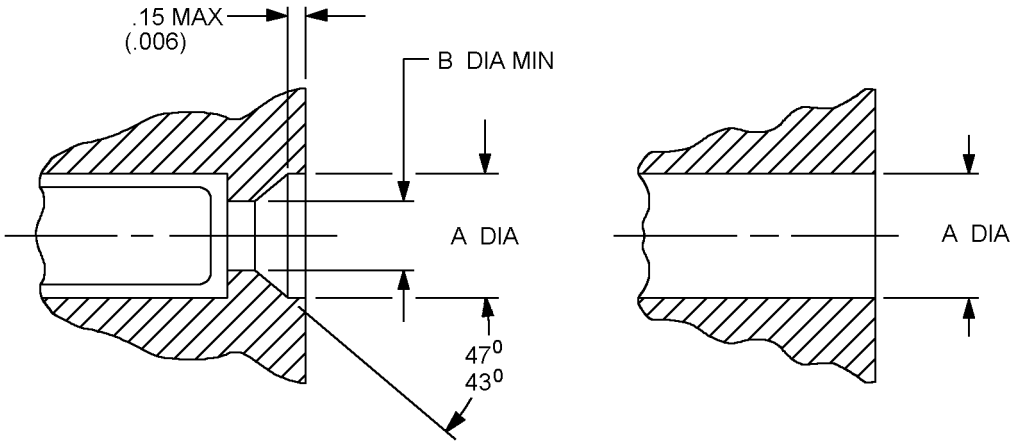

SOCKET CONTACT CAVITY
ALL SIZES EXCEPT 1 COAXIAL

CONFIGURATION A

SOCKET CAVITY SIZE
1 COAXIAL

CONFIGURATION B

Contact size	A dia.		B dia.	
	mm	Inches	mm	Inches
20	2.67 2.41	.105 .096	1.27	.05
16	3.38 3.12	.133 .123	2.01	.079
12	4.57 4.32	.180 .170	2.51	.099
Size 1 coaxial	13.07 12.80	.515 .504		
Size 5 coaxial	7.49 7.04	.287 .277	5.72	.225
Size 8 concentric twinax	7.49 7.24	.295 .285	5.84	.230

NOTES:
1. Dimensions are in millimeters.
2. Inch equivalents are given for information only.
3. For contact size 22, A diameter and B dimensions are not applicable for configuration A.

FIGURE 7. Socket contact cavity.

Downloaded from http://www.everyspec.com

3.4.3.10.3 Interfacial seal. Interfacial seal for receptacle inserts shall be designed in accordance with figure 8.

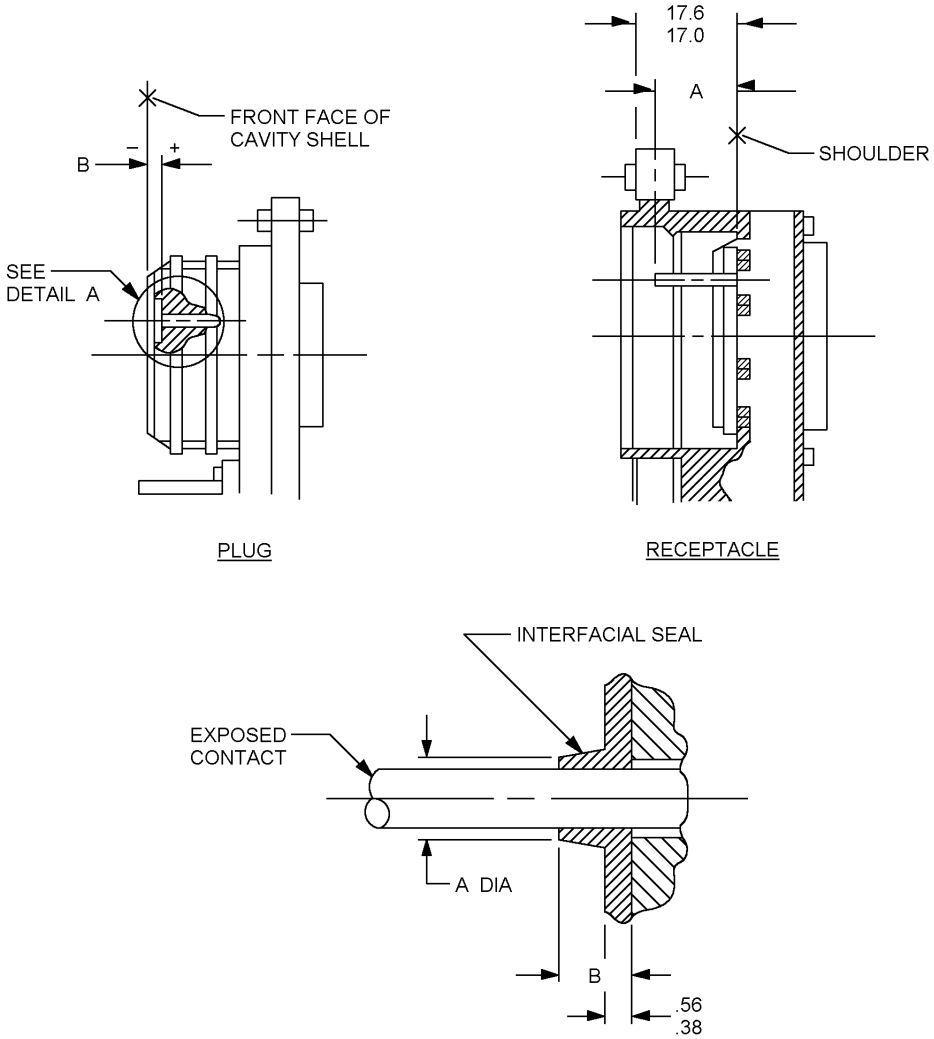

mm	Inches
0.36	.014
0.56	.022
17.0	.67
17.6	.69

NOTES:
1. Dimensions are in millimeters.
2. Inch equivalents are given for information only.

FIGURE 8. Exposed contact interfacial seal design.

Downloaded from http://www.everyspec.com

Contact	A dia.		B	
	mm	Inches	mm	Inches
22 socket	2.29 2.13	.090 .084	1.75 1.55	.069 .061
20 pin	1.83 1.68	.072 .066	2.54 2.29	.100 .090
16 pin	2.51 2.34	.099 .092	2.67 2.41	.105 .095
12 pin	3.33 3.15	.131 .124	2.79 2.54	.110 .100
Size 1 coaxial pin	16.76 14.22	.660 .560	2.41 1.65	.095 .0650
Size 5 coaxial pin	7.01 6.81	.276 .268	2.29 2.03	.090 .080
Size 8 concentric twinax pin	7.01 6.81	.276 .268	2.67 2.41	.105 .095

NOTES:
1. Dimensions are in millimeters.
2. Inch equivalents are given for information only.

FIGURE 8. Exposed contact interfacial seal design - Continued.

3.4.4 Contact accommodation. Contact accommodation shall be in accordance with the provisions of DOD-STD-1842 and specification sheets (see 3.1). For contact size and type (information only), see appendix B. For indirect shipments (shipments to non-Government agencies), connectors may be ordered without contacts (see 6.3 and 6.7).

a. The quantity of crimp contacts to be supplied with each connector unit package shall consist of a full complement of contacts plus 1 spare contact for each size used in the arrangement utilizing 26 contacts or less.

b. For arrangements utilizing more that 26 contacts, 2 spare contacts of each size used in the arrangement shall be supplied.

c. Spare coaxial and concentric twinax contacts need not be supplied.

3.4.4.1 Contact arrangement identification. The contact positions shall be permanently designated in contrasting color on the front face of the insert material and on the rear face of the wire sealing grommet. The interfacial markings of the inserts shall not be raised or recessed on any sealing surfaces and shall be in accordance with DOD-STD-1842.

Downloaded from http://www.everyspec.com

3.4.4.2 Contact location. When tested in accordance with 4.6.3, the axial location of contacts from gauging surfaces of insert housing shall be as specified on figure 9.

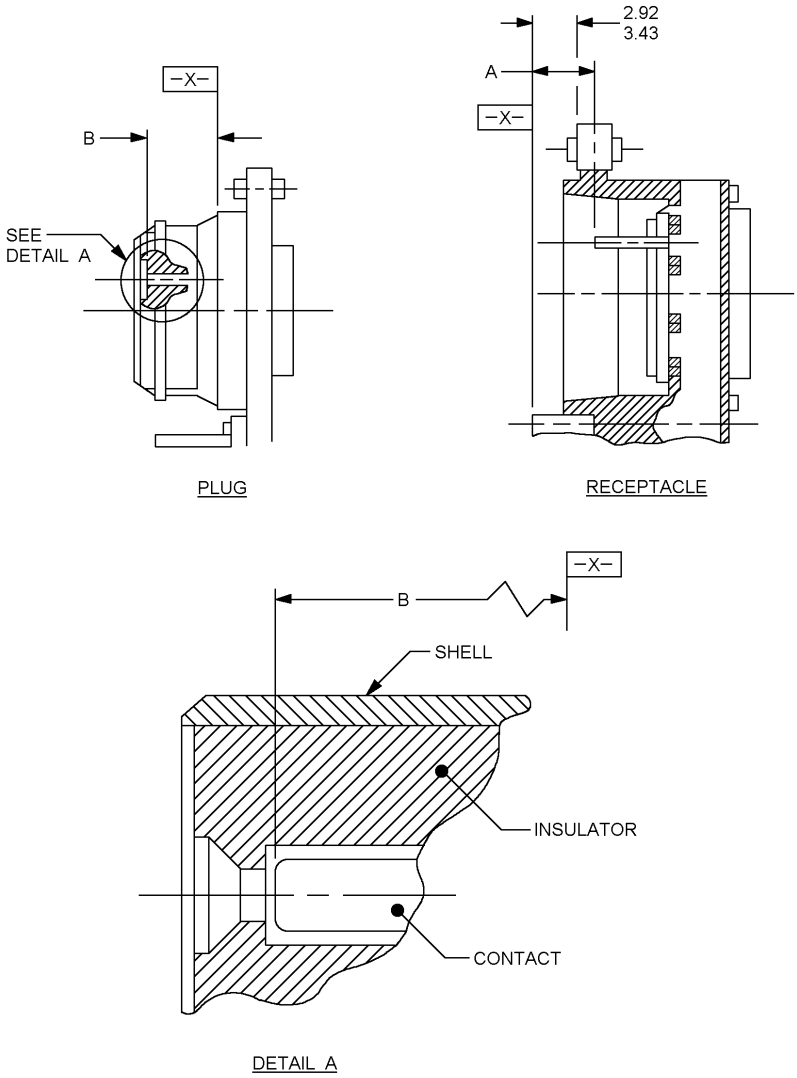

mm	Inches
2.92	0.11
3.43	0.14

NOTES:
1. Dimensions are in millimeters.
2. Inch equivalents are given for information only.

FIGURE 9. Contact location.

Downloaded from http://www.everyspec.com

Contact		A		B	
Size	Type	mm	Inches	mm	Inches
22	Pin	----	----	17.196	0.677
		----	----	16.33	0.643
	Socket	11.18	0.440	----	----
		10.57	0.416	----	----
20	Pin	12.19	0.480	----	----
		11.125	0.438	----	----
	Socket	----	----	18.82	0.741
		----	----	17.55	0.691
16	Pin	10.34	0.407	----	----
		9.07	0.357	----	----
	Socket	----	----	18.31	0.721
		----	----	17.04	0.671
12	Pin	10.34	0.407	----	----
		9.17	0.361	----	----
	Socket	----	----	18.136	0.714
		----	----	17.02	0.670
12 Shielded	Pin	12.19	0.480	----	----
		10.97	0.432	----	----
	Socket	----	----	18.11	0.713
		----	----	16.92	0.666
8 Concentric twinax	Pin	11.07	0.436	----	----
		10.21	0.402	----	----
	Socket	----	----	18.44	0.726
		----	----	17.58	0.692
5 Coax	Pin	11.18	0.440	----	----
		10.26	0.404	----	----
	Socket	----	----	18.24	0.718
		----	----	17.57	0.692
1 Coax	Pin	10.79	0.425	----	----
		9.83	0.387	----	----
	Socket	----	----	20.34	0.801
		----	----	19.53	0.769

NOTES:
1. Dimensions are in millimeters.
2. Inch equivalents are given for information only.
3. All measurements are to the tip or front face of contacts.

FIGURE 9. Contact location - Continued.

Downloaded from http://www.everyspec.com

3.4.5. Shell.

3.4.5.1 Retention system marking. The polarizing key retaining plate on both plug and receptacle shell shall be colored blue to indicate rear release contact retention system.

3.4.5.2 Shell design. The connector shall be of the solid shell design and shall be constructed to positively retain inserts. The configuration shall be as shown in the applicable specification sheet (see 3.1). The engaging skirts and surfaces shall be configured to align the shells while mating and to provide proper guidance for engagement of the pin and socket contacts.

a. The connector receptacle shall provide metal-to-metal bottoming of the connector shells to ensure full connector mating (see figure 1).

b. When the plug and receptacle are fully mated, the space between the adjacent flanges shall be a minimum of 10.21 millimeters (.040 inch) and a maximum of 11.28 millimeters (.44 inches).

c. Minimum contact exposure shall be maintained. Contacts shall not extend beyond the shell with the exception of the size 1 coaxial contact.

d. Optional alignment ribs may be provided on the connector plug. The number of ribs and the and the spacing of the ribs is also optional. Ribs shall not be permitted on the connector receptacle.

3.4.5.3 Shell polarization. Shell polarization of the connector shall be accomplished by means of settable posts and keys positioned in accordance with the applicable specification sheet (see 3.1). Polarizing post and keyhole shall be as shown on figures 10 and 11. Polarization shall occur before any contacts enter the mating insulator or coaxial contacts begin engagement. The connector shells shall have a minimum of 99 polarizing position options and shall use the code defined by figure 12. All plugs and all receptacles shall be shipped with the posts and keys in position 01 (see figure 12). Each other position shall be selectable by the user without disassembly of the connector.

3.4.5.4 EMI feature. An EMI feature shall be provided on the plug shell to ensure electrical grounding to the mating receptacle shell and to meet the EMI requirements specified herein. The EMI feature shall be retained around each insert housing and shall, during connector mating, make contact to receptacle shell prior to electrical contact mating.

3.4.5.5 Peripheral environmental seal. A resilient peripheral seal shall be provided around each insert housing of the plug shell to provide environmental peripheral sealing and stabilizing between mating shells. Peripheral seal shall be lubricated with a silicone fluid lubricant conforming to VV-D-1078, grade 100,000 centistokes minimum.

3.4.6 Connector mating sequence. Connector mating sequence shall be as follows:

a. Shells, polarizing keys, EMI feature, contacts.

b. Peripheral seal engagement may occur anytime between shells and contacts mating.

3.4.7 Backshells hardware. Backshells shall be in accordance with MIL-C-85049 (see 6.5.3).

Downloaded from http://www.everyspec.com

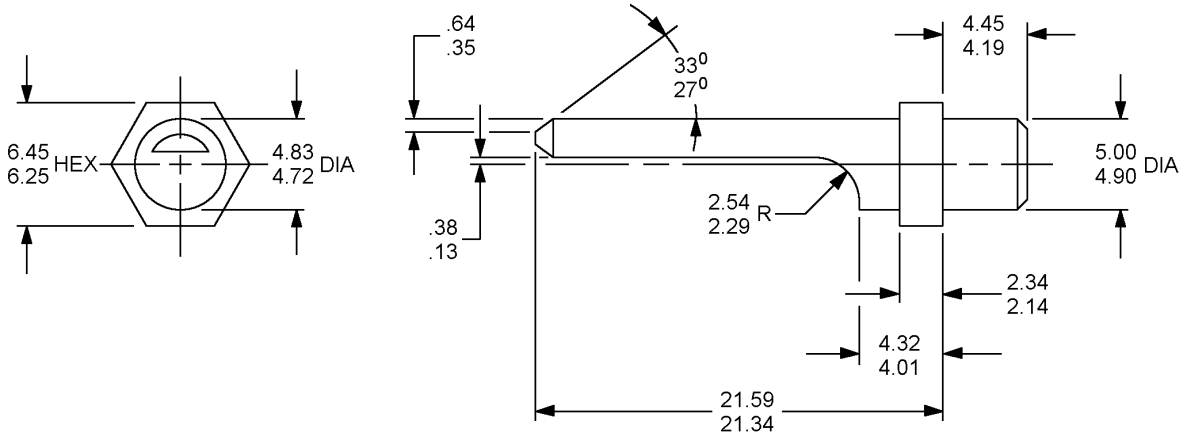

mm	Inches	mm	Inches
.005	.13	.170	4.32
.014	.35	.175	4.45
.015	.38	.186	4.72
.025	.64	.190	4.83
.084	2.14	.193	4.90
.090	2.29	.197	5.00
.092	2.34	.254	6.45
.158	2.54	.262	6.65
.165	4.19	.841	21.34
		.850	21.59

NOTES:
1. Dimensions are in millimeters.
2. Inch equivalents are given for information only.

FIGURE 10. Plug polarizing post.

Downloaded from http://www.everyspec.com

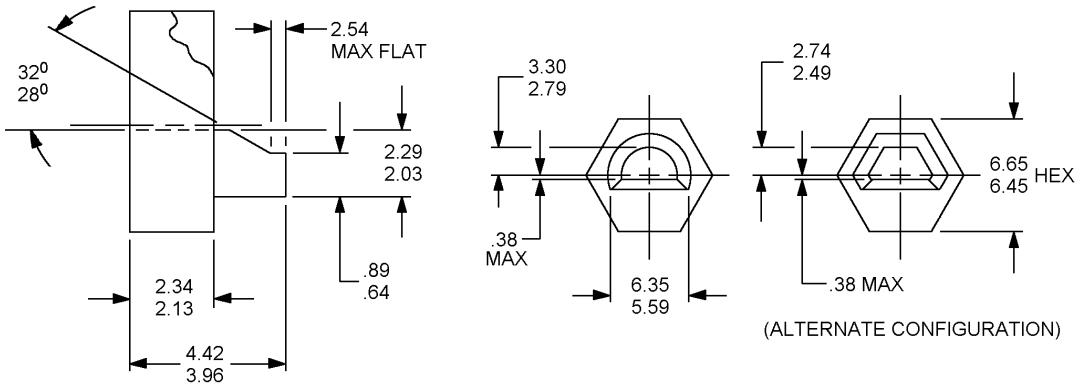

mm	Inches	mm	Inches
0.38	.015	2.54	.100
0.64	.025	2.74	.108
0.645	.025	2.79	.110
0.665	.026	3.30	.130
0.89	.035	3.96	.156
2.03	.080	4.42	.174
2.13	.084	5.59	.220
2.29	.090	6.35	.25
2.34	.092	6.65	.25
2.49	.098	6.65	.26

NOTES:
1. Dimensions are in millimeters.
2. Inch equivalents are given for information only.

FIGURE 11. Receptacle key hole polarizing insert.

Downloaded from http://www.everyspec.com

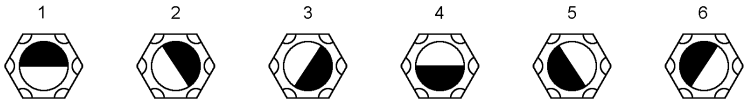

POLARIZATION POSITIONS

POSI-TION	LEFT POST	CENTER POST	RIGHT POST	POSI-TION	LEFT KEY	CENTER KEY	RIGHT KEY	POSI-TION	LEFT POST	CENTER POST	RIGHT POST	POSI-TION	LEFT POST	CENTER POST	RIGHT POST
00	-	-	-	00	-	-	-	50	2	2	5	50	6	3	3
01	1	1	1	01	4	4	4	01	3	2	5	51	6	3	2
02	2	1	1	02	4	4	3	52	4	2	5	52	6	3	1
03	3	1	1	03	4	4	2	53	5	2	5	53	6	3	6
04	4	1	1	04	4	4	1	54	6	2	5	54	6	3	5
05	5	1	1	05	4	4	6	55	1	2	4	55	1	3	4
06	6	1	1	06	4	4	5	56	2	2	4	56	1	3	3
07	1	1	6	07	5	4	4	57	3	2	4	57	1	3	2
08	2	1	6	08	5	4	3	58	4	2	4	58	1	3	1
09	3	1	6	09	5	4	2	59	5	2	4	59	1	3	6
10	4	1	6	10	5	4	1	60	6	2	4	60	1	3	5
11	5	1	6	11	5	4	6	61	1	2	3	61	2	3	4
12	6	1	6	12	5	4	5	62	2	2	3	62	2	3	3
13	1	1	5	13	6	4	4	63	3	2	3	63	2	3	2
14	2	1	5	14	6	4	3	64	4	2	3	64	2	3	1
15	3	1	5	15	6	4	2	65	5	2	3	65	2	3	6
16	4	1	5	16	6	4	1	66	6	2	3	66	2	3	5
17	5	1	5	17	6	4	6	67	1	2	2	67	3	3	4
18	6	1	5	18	6	4	5	68	2	2	2	68	3	3	3
19	1	1	4	19	1	4	4	69	3	2	2	69	3	3	2
20	2	1	4	20	1	4	3	70	4	2	2	70	3	3	1
21	3	1	4	21	1	4	2	71	5	2	2	71	3	3	6
22	4	1	4	22	1	4	1	72	6	2	5	72	3	3	5
23	5	1	4	23	1	4	6	73	1	3	1	73	4	2	4
24	6	1	4	24	1	4	5	74	2	3	1	74	4	2	3
25	1	1	3	25	2	4	4	75	3	3	1	75	4	2	2
26	2	1	3	26	2	4	3	76	4	3	1	76	4	2	1
27	3	1	3	27	2	4	2	77	5	3	1	77	4	2	6
28	4	1	3	28	2	4	1	78	6	3	1	78	4	2	5
29	5	1	3	29	2	4	6	79	1	3	6	79	5	2	4
30	6	1	3	30	2	4	5	80	2	3	6	80	5	2	3
31	1	1	2	31	3	4	4	81	3	3	6	81	5	2	2
32	2	1	2	32	3	4	3	82	4	3	6	82	5	2	1
33	3	1	2	33	3	4	2	83	5	3	6	83	5	2	6
34	4	1	2	34	3	4	1	84	6	3	6	84	5	2	5
35	5	1	2	35	3	4	6	85	1	3	5	85	6	2	4
36	6	1	2	36	3	4	5	86	2	3	5	86	6	2	3
37	1	2	1	37	4	3	4	87	3	3	5	87	6	2	2
38	2	2	1	38	4	3	3	88	4	3	5	88	6	2	1
39	2	2	1	39	4	3	2	89	5	3	5	89	6	2	6
40	4	2	1	40	4	3	1	90	6	3	5	90	6	2	5
41	5	2	1	41	4	3	6	91	1	3	4	91	1	2	4
42	6	2	1	42	4	3	5	92	2	3	4	92	1	2	3
43	1	2	6	43	5	3	4	93	3	3	4	93	1	2	2
44	2	2	6	44	5	3	3	94	4	3	4	94	1	2	1
45	3	2	6	45	5	3	2	95	5	3	4	95	1	2	6
46	4	2	6	46	5	3	1	96	6	3	4	96	1	2	5
47	5	2	6	47	5	3	6	97	1	3	3	97	2	2	4
48	6	2	6	48	5	3	5	98	2	3	3	98	2	2	3
49	1	2	5	49	6	3	4	99	3	3	3	99	2	2	2

NOTES:

1. Darkened portion indicates extended part of post in plug. Light portion indicates key-hole in receptacle.
2. Mating faces shown with top up.

FIGURE 12. Polarization positions.

Downloaded from http://www.everyspec.com

3.5 Performance requirements. Connectors, inserts, shells, backshells, contacts, and accessories shall be designed to meet the performance requirements specified herein when tested in accordance with the specified methods of section specified herein when tested in accordance with the specified methods of section 4.

3.5.1 Examination of product. Contacts, inserts, shells, backshells, connectors, and accessories shall be examined as specified in 4.6.1, and shall meet the requirements indicated herein.

3.5.2 Nonmagnetic materials. The relative permeability of the wired assembled, and fully mated connector assembly shall be less than 2.0 when measured in accordance with 4.6.27.

3.5.3 Mating and separating forces. When tested as specified in 4.6.4 the maximum force needed to mate or separate counterpart plugs and receptacles shall not exceed 1446 newtons (325 lbf) for size 2, 1780 newtons (400 lbf) for size 3, and 2113 newtons (475 lbf) for size 4.

3.5.4 Maintenance aging, contact insertion and removal forces. After testing as specified in 4.6.5, connectors shall be capable of meeting the performance requirements of this specification. After testing, the individual contact insertion and removal forces shall not exceed the values listed in table III. Failure to complete these operations shall be cause for rejection.

TABLE III. Insertion and removal forces.

Contact size 1/	Axial loads (newtons)	
	Insertion	Removal
22	45	36
20	67	45
16	90	67
12	112	90
8 Concentric twinax	135	112
Size 5 coaxial	135	112

3.5.5 Contact retention. When tested as specified in 4.6.6, the axial displacement of the contacts shall not exceed 0.3 mm. No dislodging or damage to contacts or inserts shall result.

3.5.6 Thermal shock (temperature cycling). When tested as specified in 4.6.7, connectors shall meet the performance requirements of the remaining test sequence. There shall be no damage detrimental to the operation of the connectors.

3.5.7 Insert retention. When tested as specified in 4.6.8, connectors shall retain their inserts in their proper location in the shell. The maximum axial displacement allowed shall be .25 mm. Evidence of cracking, breaking, separation from the shell, or loosening shall be cause for rejection of parts.

3.5.8 Salt spray (corrosion). After testing as specified in 4.6.9.1 and 4.6.9.2, unmated connectors and individual contact samples shall show no exposure of basic metal (due to corrosion), which will adversely affect performance.

3.5.9 Contact resistance. The contact resistance shall be in accordance with the applicable specification sheet of MIL-C-39029 and shall be tested in accordance with 4.6.10 herein.

Downloaded from http://www.everyspec.com

3.5.10 Insulation resistance at ambient temperature. When tested as specified in 4.6.11.1, the insulation resistance between any pair of contacts and between any contact and the shell shall be greater than 1,000 megohms.

3.5.11 Insulation resistance at elevated temperature. When tested as specified in 4.6.11.2, the insulation resistance between any pair of contacts and between any contact and the shell shall be greater that 1,000 megohms.

3.5.12 Withstanding voltage. When tested as specified in 4.6.12.1 and 4.6.12.2, connectors shall show no evidence of flashover or breakdown.

3.5.13 Durability. When tested as specified in 4.6.13, the connector shall show no defects detrimental to the operation of the connectors and shall meet the subsequent test requirements.

3.5.14 Vibration. When tested as specified in 4.6.14, a current discontinuity of 1 microsecond or more, evidence of cracking, breaking, or loosening of parts shall be cause for rejection. Damaged fixtures or tie downs may be repaired or replaced to complete the test.

3.5.15 Shock. When tested as specified in 4.6.15, a current discontinuity of 1 microsecond more shall be cause for rejection. Evidence of cracking, breaking, or loosening of parts shall be cause for rejection. Damaged fixtures or tie downs may be repaired or replaced to complete the test.

3.5.16 Static load. When tested as specified in 4.6.16, during and after the application of the specified forces, connectors shall show no evidence of damage detrimental to their normal operation nor shall there be any interruption of electrical continuity. The connectors shall withstand a compressive load of 10888 newtons (2450 lbf), a vertical load of 5115 newtons (1150 lbf), and a side load of 2265 newtons (509 lbf).

3.5.17 Shell-to-shell and shell-to-bulkhead resistance. When tested as specified in 4.6.17, plugs and receptacles shall be electrically conductive. The maximum potential voltage between the shells of the connector pair shall not exceed 2.5 millivolts.

3.5.18 Humidity. When tested as specified in 4.6.18, the insulation resistance shall be 100 megohms or greater. Connectors shall show no deterioration or damage that will adversely affect performance.

3.5.19 EMI shielding. When tested in accordance with 4.6.19, the EMI shielding capabilities of mated shells shall not be less than that specified in table IV at the specified frequencies.

TABLE IV. Shielding effectiveness.

Frequency (MHz)	Leakage attenuation (dB)	Frequency (MHz)	Leakage attenuation (dB)
100	65	400	62
200	63	800	60
300	63	1,000	60

3.5.20 Ozone exposure. When tested as specified in 4.6.20, the connectors shall show no evidence of cracking of dielectric material, deterioration of resilient seals, or other damage due to ozone exposure that will adversely affect performance.

3.5.21 Fluid immersion. After immersion in the fluids as specified in 4.6.21, connectors shall unmate and mate properly and resilient materials shall show evidence of material reversion. Shells, plating, and dielectric materials shall show no evidence of deterioration, distortion, or material reversion.

Downloaded from http://www.everyspec.com

3.5.22 Altitude immersion. When tested in accordance with 4.6.23, the mated connector shall meet the requirements of dielectric withstanding voltage as specified in 3.5.12.

3.5.23 Contact walkout. When tested as specified in 4.6.22, contacts shall not become dislodged from their normal position.

3.5.24 Installing and removal tool abuse. When tested as specified in 4.6.24, there shall be no evidence of damage to the contacts, the connector inserts, or the contact retaining mechanism.

3.5.25 Contact stability (sizes 22, 20, 16, and 12 crimp contacts). When tested in accordance with 4.6.25, the total displacement of the contact tip end shall not exceed 0.25 mm for the size 22 socket contact, 1.0 mm for the size 20 pin contact, and 1.5 mm for the size 16 and size 12 pin contact.

3.5.26 Temperature life with contact loading. When subjected to the test specified in 4.6.26, the contacts shall maintain their previously measured location with not more that 0.3 mm change.

3.5.27 Size 8 concentric twinax cavity grounding. When tested in accordance with 4.6.28, the maximum potential drop between the size 8 concentric twinax outer body and the connector mounting flange shall not exceed 10.0 mV.

3.6 Interchangeability. The connector plugs, receptacles, inserts, contacts, and accessories supplied to this specification shall meet the requirements of the applicable specification sheet (see 3.1) and shall be completely interchangeable with the components having the same part or identifying numbers (PIN) but supplied by another qualified connector manufacturer.

3.7 Marking.

3.7.1 Connectors and accessories. Connectors and accessories shall be marked in accordance with method 1 of MIL-STD-1285, and shall include the military part or identifying number (see 3.1), the manufacturer's name or code symbol, Manufacturer's Commercial and Government Entity (CAGE), and data code. The characters shall be a minimum of 1.5 millimeters in height. If used, metal stamping shall be accomplished before plating. Connector shell marking and insert marking shall remain legible after completion of the tests specified in 4.4.

3.7.2 Insert identification. The military Part or Identifying Number (PIN), manufacturer's identification, Manufacturer's Commercial and Government Entity (CAGE), and date code shall appear on the side of the insert in a contrasting color.

3.7.3 Contact designation. Contact locations shall be designated with identifiable characters as indicated on the applicable specification sheet (see 3.1). All positions shall be identified on the front and rear faces of the insert except where space limitations make this impracticable. Location of contact identifying characters shall be in close proximity to the holes but need not be placed exactly where indicated on the standard. Inserts containing size 22 contacts shall be marked with a 5 by 5 grid pattern rear face in accordance with DOD-STD-1842.

3.8 Workmanship. The connector shall be fabricated in a manner such that the criteria for appearance, fit, and adherence to specified tolerances are observed. Particular attention shall be given to neatness and thoroughness of marking parts. Plating, welding, soldering, riveting, staking, bonding, and parts shall be free of burrs and sharp edges.

Downloaded from http://www.everyspec.com

4. VERIFICATION

4.1 Classification of inspections. The inspections requirements specified herein are classified as follows:

a. First article inspection (see 4.2).

b. Conformance inspection (see 4.3).

4.2 First article inspection. First article inspection shall consist of materials inspection; all the tests in table V as applicable to the contact or purchase order, and examinations of this specification.

4.3 Conformance inspection.

4.3.1 Inspection of product for delivery. Inspection of product for delivery shall consist of group A inspection.

4.3.1.1 Inspection lot. An inspection lot shall consist of all connectors covered by one specification sheet, produced under essentially the same condition, and offered for inspection at one time.

4.3.2 Group A inspection. Each connector shall be subjected to the individual test shown in table VI. For group A inspection, the documentation and standard test conditions of EIA-364, do not apply.

4.3.2.1 Visual examination. Each connector shall be visually examined for completeness, workmanship, and identification requirements. Attention shall be given to those assemblies that require a seal to determine the condition of that seal. Seals missing, twisted, buckled, kinked, or damaged in a manner affecting functional performance shall be cause for rejection.

4.4 Testing and inspections.

4.4.1 Test equipment and inspection facilities. Test and measuring equipment and inspection facilities of sufficient accuracy, quality, and quantity to maintained by the contractor. The establishment and maintenance of a calibration system to control the accuracy of the measuring and test equipment shall be in accordance with ANSI-Z540.1. Testing and inspections shall be performed at a laboratory acceptable to the Government (see 6.3).

4.4.2 Hydrolytic stability. Certification of hydrolytic stability is required, specify material tested and water absorption report as specified in ASTM D570 (see 3.1.5).

4.4.3 Fungus resistance certification. Certification that materials used are fungus inert is required (see 3.1.6).

4.5 Inspection conditions. Unless otherwise specified, all inspections shall be performed in accordance with the test conditions specified in the “General requirements” of EIA-364 and MIL-STD-202.

4.5.1 Sample size. A minimum of 14 plugs and receptacles shall be subjected to the examinations and tests in table V, in the sequence shown.

4.5.1.1 Test groups I, and II, III and IV. Each test group shall consist of a minimum of three completely assembled plugs and receptacles representing the class (1.2.1), shell size (see 3.1), and each of the insert arrangements (DOD-STD-1842) for which first article inspection is desired.

Downloaded from http://www.everyspec.com

4.5.1.2 Test group V. Sample shall consist of a modified size 2 shell (see 3.1) plug and receptacle (see 4.7.18).

4.5.1.3 Test group VI. Test group VI shall consist of a completely assembled mated pair of a plug and receptacle connector using a shell size 2A.

4.5.2 Preparation of samples. Unless otherwise specified, for signal-power contacts (size 22, 20, 16, and 12), half the number of each contact size in each connector shall be wired with the largest allowable AWG size using MIL-W-22759/43 wires. The remaining number of contacts shall be wired with the smallest allowable AWG size using MIL-W-22759/33 or MIL-W-22759/43 wires. Samples of group VI, altitude immersion, may exclude AWG 24 and 26 wires. For shielded contacts and concentric twinax contacts, use applicable cables in accordance with MIL-C-17. Termination tools shall be in accordance with appendix A herein.

4.5.3 Qualification of contacts. If a manufacturer submits first article samples of MIL-DTL-83527 connectors, contacts supplied with the samples shall be either qualified to MIL-C-39029 or contacts that have been deemed acceptable by the procuring activity.

4.5.4 Failures. Any failure shall be cause for refusal to grant compliance to first article inspection.

Downloaded from http://www.everyspec.com

TABLE V. First article inspection test sequence.

Test	Group						Requirements paragraph	Test method paragraph
	I	II	III	IV	V	VI		
Examination of product	X	X	X	X	X	X	3.5.1	4.6.1
Contact location	X						3.4.4.2	4.6.3
Nonmagnetic materials	X	X	X				3.5.2	4.6.27
Size 8 cavity grounding	X						3.5.27	4.6.28
Insulation resistance, (ambient temperature)	X	X					3.5.10	4.6.11.1
Insulation resistance, (elevated temperature)	X	X					3.5.11	4.6.11.2
Withstanding voltage, (sea and altitude)	X	X					3.5.12	4.6.12.1 and 4.6.12.2
Mating and separating forces	X	X	X				3.5.3	4.6.4
Maintenance aging, (contact insertion and removal forces)				X			3.5.4	4.6.5
Thermal shock	X	X			X		3.5.6	4.6.7
Withstanding voltage, (sea level)	X	X					3.5.12	4.6.12.1
Humidity		X					3.5.18	4.6.18
Insulation resistance, (ambient temperature)		X					3.5.10	4.6.11.1
Insulation resistance, (elevated temperature)		X					3.5.11	4.6.11.2
Vibration (functional and endurance)	X 1/			X 2/			3.5.14	4.6.14.1 and 4.6.14.2
Static load			X				3.5.16	4.6.16
Shock 3/	X						3.5.15	4.6.15
Durability	X						3.5.13	4.6.13
Insulation resistance, (ambient temperature)			X				3.5.10	4.6.11.1
Withstanding voltage, (sea level)			X			X	3.5.12	4.6.12.1
Altitude immersion			X				3.5.22	4.6.23
Salt spray (corrosion)			X 4/	X 5/			3.5.8	4.6.9.1 and 4.6.9.2
Contact resistance	X	X					3.5.9	4.6.10
Insulation resistance, (ambient temperature)	X						3.5.10	4.6.11.1
Insulation resistance, (elevated temperature)	X						3.5.11	4.6.11.2
Withstanding voltage, (sea level)	X						3.5.12	4.6.12.1
Shell-to-shell and shell-to-bulkhead resistance					X		3.5.17	4.6.17
EMI shielding					X		3.5.19	4.6.19
Contact walkout (one connector)			X				3.5.23	4.6.22
Ozone exposure	X						3.5.20	4.6.20
Installing and removal tool abuse						X	3.5.24	4.6.24
Contact stability		X					3.5.25	4.6.25
Temperature life with Contact loading			X				3.5.26	4.6.26
Fluid immersion 4/	X	X	X	X			3.5.21	4.6.21
Contact retention	X	X	X	X			3.5.5	4.6.6
Insert retention	X	X	X	X			3.5.7	4.6.8
Examination of product	X	X	X	X	X		3.5.1	4.6.1

See footnotes on next page.

Downloaded from http://www.everyspec.com

1/ Functional vibration
2/ Endurance vibration.
3/ Shock may be tested immediately following each plane of vibration.
4/ Dynamic salt spray.
5/ Standard salt spray

TABLE VI. Group A inspection.

Group A inspection	Individual test
Visual examination Inspection in accordance with 4.6.1	100 percent
Insulation resistance (ambient temperature) Produced in accordance with 4.6.11.1 1/ 2/	100 percent
Withstanding voltage (seal level) Produced in accordance with 4.6.12.1 1/	100 percent

1/ The manufacturer may use in-process controls for this requirement.
2/ Test between two adjacent contacts and between two peripheral contacts and the shell.

4.6 Methods of examinations and tests.

4.6.1 Examination of product (see 3.5.1). The connectors, accessories, and piece parts shall be examined to ensure conformance with this specification and the applicable detail drawings not covered by the performance requirements of 3.5. In-process controls of component parts, unrelated to lot sizes of finished connectors, may be utilized in lieu of examination of these components in the finished connectors to assure conformance of these component parts. Examination in a continuing manner shall be performed to assure compliance with the following requirements.

a. Applicable specification sheet.
b. Materials.
c. Design and construction.
d. Interchangeability.
e. Marking.
f. Workmanship.

4.6.2 Nonmagnetic materials (see 3.5.2). Connectors shall be tested as specified in test procedure 54 of EIA-364.

4.6.3 Contact location (see 3.4.4.2). When measured with gauge pins and proper gauges, axial location of contacts from mating face shall meet the requirements of 3.4.4.2.

4.6.4 Mating and separating forces (see 3.5.3). Counterpart plug and receptacle pairs shall be loaded with contacts and mounted in a test fixture. Each connector pair shall be mated and unmated 13 times. During the eleventh, twelfth, and thirteenth cycle, the maximum allowable mating force shall be applied and the connector pair shall bottom at least at one point in the bottoming surface areas.

4.6.5 Maintenance aging, contact insertion, and removal forces (see 3.5.4). Connectors shall be tested in accordance with test procedure 24 of EIA-364. A minimum of 20 percent, but not less than five of the contacts in each connector shall then be removed and reinserted 10 times with the aid of the applicable approved tools, the forces required to do so being measured on the first and last of each of the contact insertion and removal cycles.

Downloaded from http://www.everyspec.com

4.6.6 Contact retention (see 3.5.5). The contact retention shall be tested as specified in test procedure 29 of EIA-364. The following details and exceptions shall apply:

a. Applied axial load: Preload to 15 newtons maximum. Apply load as specified in table VII.

b. Special requirements: Where the test sequence requires maintenance aging prior to contact retention. The contacts that were subjected to maintenance aging shall also be selected for contact retention.

c. Axial direction: The applicable forces shall be applied along the longitudinal axial of individual contacts in the direction tending to displace the contacts to the rear.

d. Only the contacts to be tested need be installed in the connector.

TABLE VII. Axial load for contact retention test.

Contact size	Axial load newtons
22	55
20	90
16	112
12	135
1 and 5 coaxial	112
8 concentric twinax	112

4.6.7 Thermal shock (temperature cycling) (see 3.5.6). Mated connectors shall be subjected to the temperature cycling of EIA-364, test procedure 32, test condition I, 5 cycles. The following details and exceptions shall apply:

a. Step 1 temperature shall be -65°C, + 0°C, -5°C (-85° F).

b. Steps 2 and 4 shall be of 2 minutes maximum duration.

c. Step 3 temperature shall be 150°C +5°C, -0°C (302° F).

4.6.8 Insert retention (see 3.5.7). Connectors shall be tested in accordance with test procedure 35 of EIA-364. The following details and exceptions shall apply:

a. Connectors shall be unwired and unmated.

b. Load force of 200 newtons (45 lbf) applied to front, then the rear face of each insert.

Downloaded from http://www.everyspec.com

4.6.9 Salt spray (corrosion (see 3.5.8).

4.6.9.1 Standard test. Unmated connectors shall be tested in accordance with test procedure 26 of EIA-364.

a. Test condition letter: A.

b. The samples shall not be mounted but shall be suspended from the top of the chamber using waxed twine or string, glass rods, or glass cord.

c. Wire ends must be protected to prevent salt migration.

4.6.9.2 Dynamic test. The wired, assembled, plugs and receptacles shall be mated and unmated 50 cycles at a rate of 300 cycles per hour maximum. The mating and unmating shall be accomplished so that the plug and receptacle are completely separated during each cycle. The connectors shall then be subjected to the salt spray test in accordance with test procedure 26 of EIA-364, test condition A. The following details and exceptions apply:

a. The connectors shall be tested for 500 hours, 452 hours mated followed by 48 hours unmated.

b. The connectors shall not be mounted but shall be suspended from the top of the chamber using waxed twine or string, glass rods, or glass cord.

c. Wire ends must be protected to prevent salt migration.

After the salt spray exposure, the remaining number of durability cycles specified in 4.6.13 shall be completed.

4.6.10 Contact resistance (see 3.5.9). The contact resistance of mated contacts shall be measured in accordance with EIA-364, test procedure 06 and test procedure 23. Test procedure 23 applies only to size 22 contacts and shall precede test procedure 06. To facilitate testing, voltage probes may be so positioned as to include a reasonable length of wire providing the resistance of the wire is subtracted from the contact resistance value obtained. Eight contact pairs of each contact size in each insert shall be tested. If less than eight contacts are present, 100 percent of the contact pairs for that contact size shall be tested

4.6.11 Insulation resistance.

4.6.11.1 Insulation resistance at ambient temperature (see 3.5.10). Unmated connectors shall be tested as specified in test procedure 21 of EIA-364. The following details and exceptions shall apply; where it is undesirable to install actual contacts in connectors, simulated contacts may be used in performing this test. Seven measurements per insert shall be taken including some adjacent contacts and some contact to shell.

4.6.11.2 Insulation resistance at elevated temperature (see 3.5.11). Unmated connectors shall be tested as specified in test procedure 21 of EIA-364. Connectors shall be exposed to a temperature of 150° C +5° C, -0° C for 30 minutes. Measurement shall be made while the connectors are still in the chamber at the specified temperature.

Downloaded from http://www.everyspec.com

4.6.12 Withstanding voltage (see 3.5.12).

4.6.12.1 Withstanding voltage (sea level). Unmated connectors shall be tested in accordance with test procedure 20 of EIA-364 with the following details and exceptions.

a. The magnitude of the test voltage shall be 1,500 volts rms at 560 Hz, with the exception of size 22 contacts, which shall have test voltage of 1,300 volts rms at 60 Hz.

b. Fifty percent of the contacts shall be tested, but in no case shall less than six dielectric withstanding voltage readings be taken. If the number of contacts is three or less, all contacts must be tested.

c. For quality conformance testing, simulated contacts may be used in performing this test.

4.6.12.2 Withstanding voltage (altitude). Mated connectors and unmated connector halves shall be tested in accordance with test procedure 20 of EIA-364 with the following details and exceptions:

a. The magnitude of the test voltage shall be as specified in table VIII.

b. Twenty percent of the contacts shall be tested, but not less than six applications made, unless the number on contacts is three or less in which case, all must be tested.

c. The leads of all test circuits shall be brought out through the walls of the chamber. There shall be no wire splices inside the chamber. The wire ends of all leads shall be unsealed.

d. The chamber shall be evacuated to each of the specified altitude pressure equivalents listed in table VIII.

TABLE VIII. Test voltages - 60 Hz rms.

Altitude (KPA)	Mated (volts)	Unmated (volts)
11.6	750	550
4.4	750	350
1.1	750	200

4.6.13 Durability (see 3.5.13). Wired and assembled plugs and receptacles shall be subjected to test procedure 09 of EIA-364. The following details and exceptions shall apply.

a. 500 cycles of mating and unmating.

b. Engagement and complete separation shall be similar to that encountered in service, and may be accomplished by machine.

Downloaded from http://www.everyspec.com

4.6.14 Vibration (see 3.5.14). Wired, mated connectors shall be subjected to vibration tests in accordance with test procedure 28 of EIA-364. The following details and exceptions shall apply:

a. Test fixture design. Test fixture design shall be in accordance with figure 13. In addition, appropriate strain gauges shall be securely attached to the rear surface of the fixture backplate (away from line replaceable unit (LRU) to monitor fixture backplate reactions. Design details of fixture assembly shall be submitted to qualifying activity.

b. Test LRU. Test dummy loaded LRU shall be designed in accordance with figures 14 and 15. Design details (including proposed deviations) shall be submitted to qualifying activity.

c. With test plug connector mounted to the fixture and test receptacle connector mounted to test LRU, the assembled LRU shall be installed in the fixture using the test swing bolts specified. The test swing bolts shall be torqued evenly until the loading backplate registers a total load of 635 grams (660 pounds) ±5 percent (through the strain gauge reading).

d. Fifty percent of the contacts in the test connectors shall be wired in a number of series circuits, and 100 +0, -20 mA current shall be caused to flow through each circuit during vibration. Each circuit shall be wired to detector with sufficient sensitivity to detect loss of continuity of one microsecond or longer.

e. Backplate loading. Appropriate strain gauge shall be securely attached to fixture backplate or LRU backplate to monitor backplate reactions.

f. Lubrication of bottom surface of dummy LRU and top surface of fixture or wear plate may be employed.

4.6.14.1 Functional vibration.

a. Test curve: In accordance with figure 16.

b. Duration: Two hours each in all three axes.

c. All circuits shall be monitored for discontinuity through the vibration test.

4.6.14.2 Endurance vibration.

a. Test curve: In accordance with figures 16 and 17.

b. Duration: 2.5 hours each in all three axes at figure 17 level. Immediately following completion of each 2.5 hours, subject the test specimen to 2 minutes of vibration at figure 16 level.

c. Monitoring: All circuits shall be monitored for discontinuity during the figure 16 level vibration.

Downloaded from http://www.everyspec.com

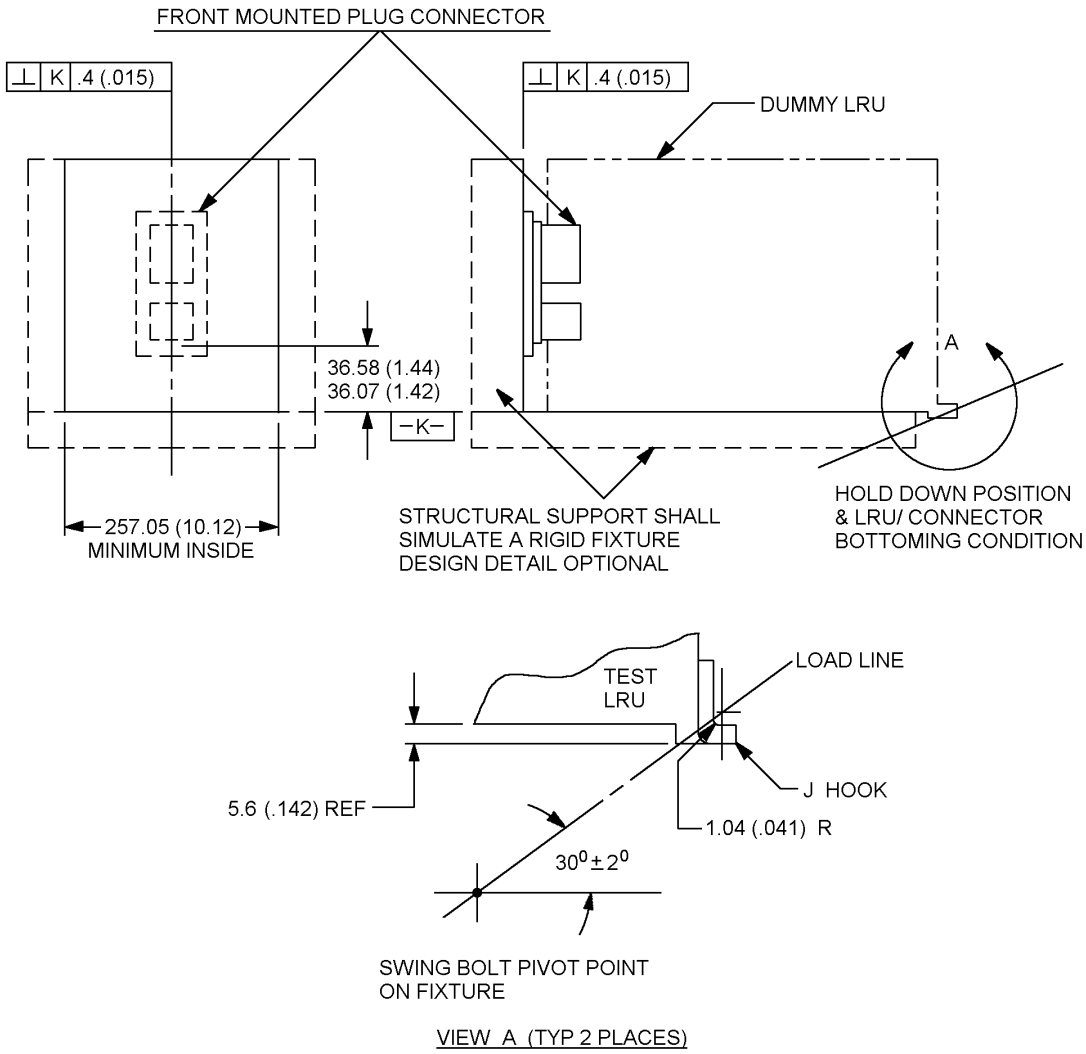

NOTES:

1. Dimensions are in millimeters.
2. Inch equivalents are given for information only. Inch equivalents are in parentheses.
3. For hold down positions see figures 14 and 15.
4. Hold down devices shall be Tridair P/N HD-12017-101 evenly torqued to result in specified loads in the fixture backplate.
5. Connector shall be mounted to the fixture using NAS 601 screws and NAS 1291-CD6M locknuts. Screws shall be torqued to .17 - .23 kg/m (15 - 20 in-lb.). Other hardware may be used if equivalent strength and locking features are maintained.

FIGURE 13. Structural support design.

Downloaded from http://www.everyspec.com

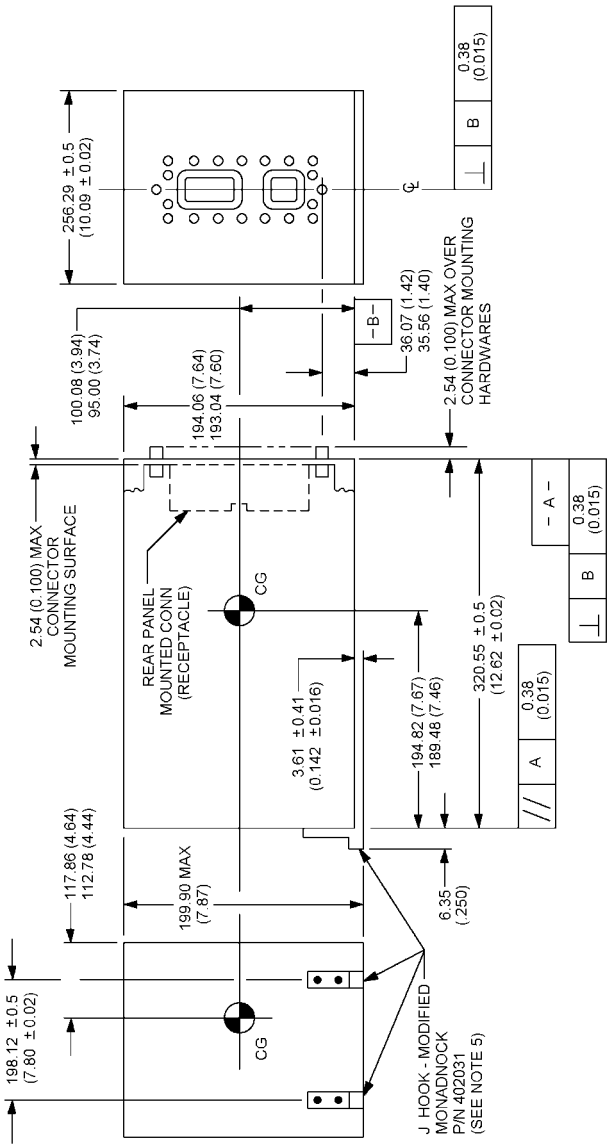

NOTES:

1. Dimensions are in millimeters.
2. Inch equivalents are given for information only.
3. LRU shall be dummy loaded to 27.22 ±0.23 kg (60.0 ± 0.5 lbs) with center of gravity as shown.
4. Connector location shall be based on datum boss of connector flange.
5. LRU shall be constructed such that dummy load is evenly distributed and the sides properly supported to simulate a rigid body.
6. Connector shall be mounted to the LRU using NAS 601 screws and NAS 1291-CO6M locknuts. Screws shall be torqued to 0.17 - 0.23 kg-m (15-20 in-lbs).
7. Other hardware may be used if equivalent strength and locking features are maintained.

FIGURE 14. Dummy loaded LRU, rear panel mounted connector configuration.

Downloaded from http://www.everyspec.com

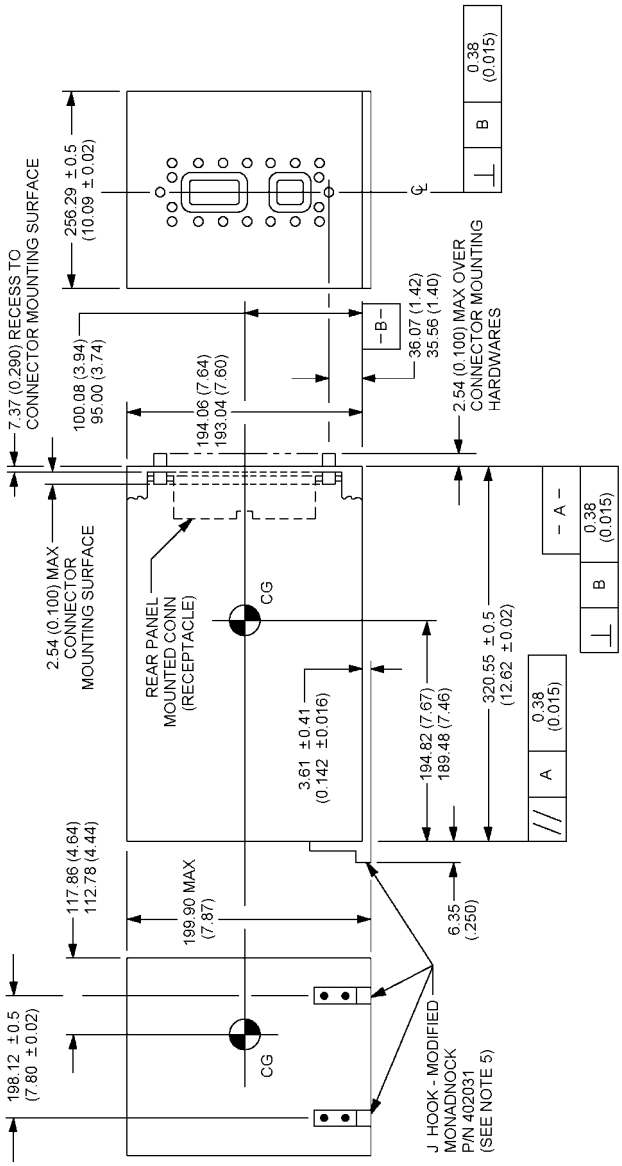

NOTES:

1. Dimensions are in millimeters.
2. Inch equivalents are given for information only.
3. LRU shall be dummy loaded to 27.22 ±0.23 kg (60.0 ± 0.5 lbs) with center of gravity as shown.
4. Connector location shall be based on datum boss of connector flange.
5. LRU shall be constructed such that dummy load is evenly distributed and the sides properly supported to simulate a rigid body.
6. Connector shall be mounted to the LRU using NAS 601 screws and NAS 1291-C06M locknuts. Screws shall be torqued to 0.17-0.23 kg-m (15-20 in-lbs.)
7. Other hardware may be used if equivalent strength and locking features are maintained.

FIGURE 15. Dummy loaded LRU, front panel mounted connector configuration.

Downloaded from http://www.everyspec.com

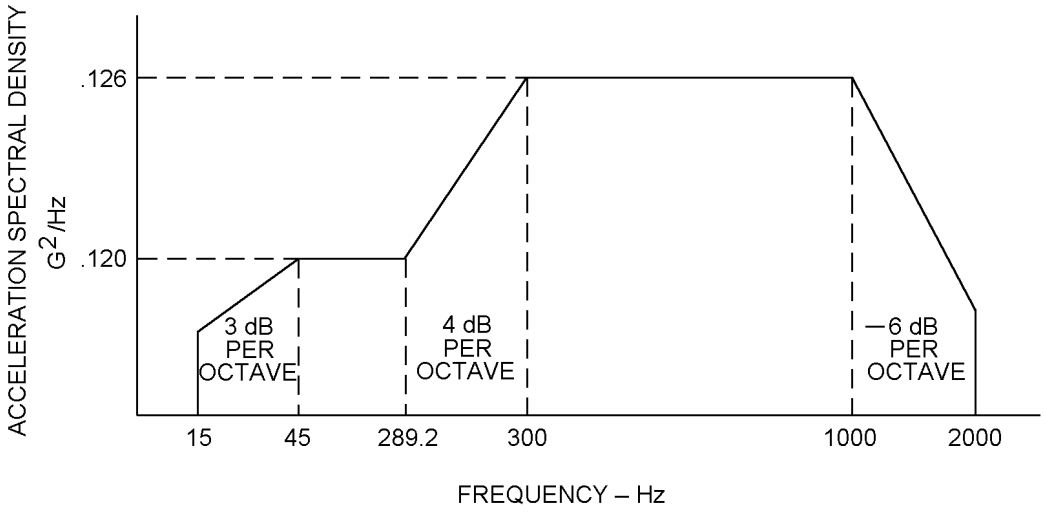

FIGURE 16. Functional vibration test curve.

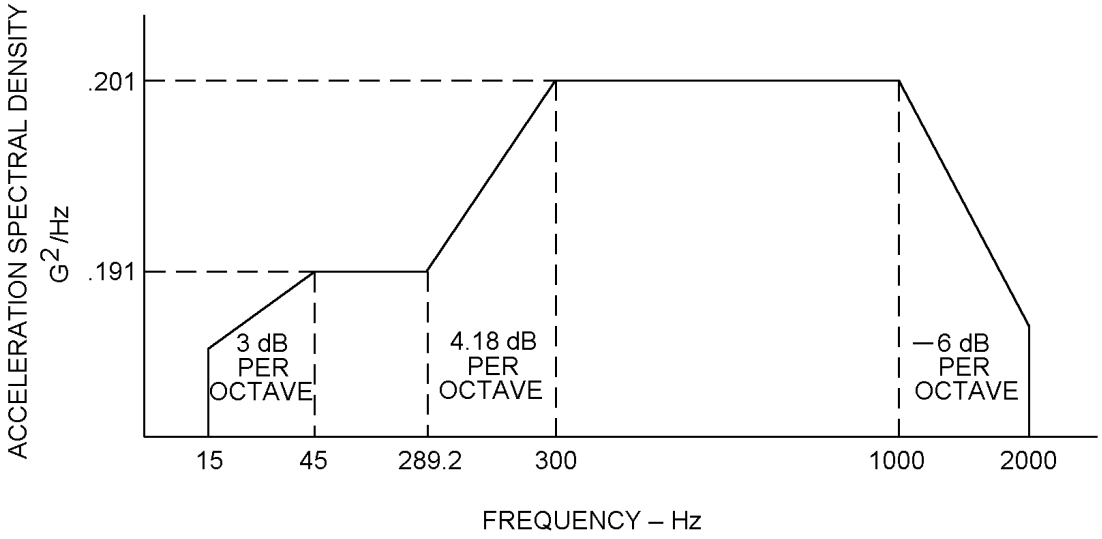

FIGURE 17. Endurance vibration test curve.

Downloaded from http://www.everyspec.com

4.6.15 Shock (see 3.5.15). The connectors shall be tested in accordance with test procedure 27 of EIA-364. The following details shall apply.

a. Test condition letter: H (30 G, 11 ms, half sine).

b. Test setup shall be same as for vibration test (see figure 13).

c. Fifty percent of the contacts shall be wired in a series circuit and a 100 +10, -0 milliamperes current shall be used.

4.6.16 Static load (see 3.5.16). Wired connectors shall be mounted on separate steel or aluminum plates 2.5 millimeters (.010 inch) thick. The mated connectors shall support the specified load applied uniformly to the mounting plates in each of the three principal axes, A - mating compression, B - vertical shear, C - side loaded shear, in accordance with figure 18. Force shall be applied gradually at a rate approximately 100 newtons/second (22.4 lbf) and the final specified value shall be maintained for 1 minute.

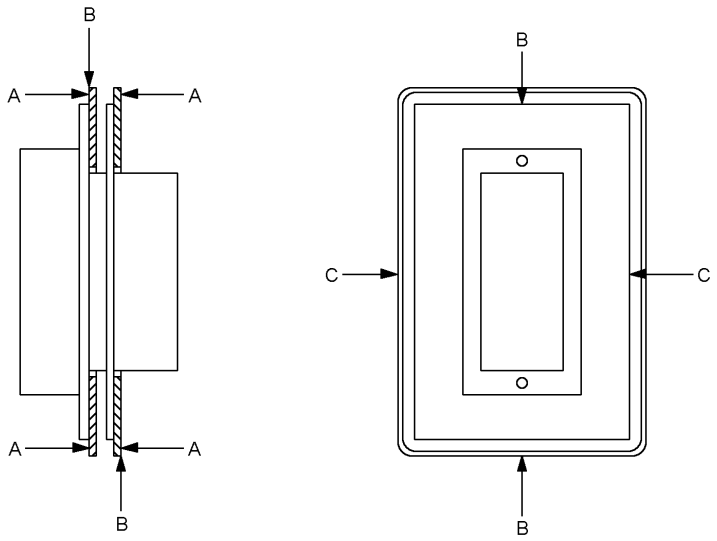

FIGURE 18. Static load test arrangement.

4.6.17 Shell-to-shell and shell-to-bulkhead resistance (see 3.5.17). Each shell cavity of mated connector pairs shall be subjected to the test specified in test procedure 83 of EIA-364. Measuring points shall be rear surfaces of mounting flange.

4.6.18 Humidity (see 3.5.18). Wired, mated connectors shall be subjected to the humidity test specified in test procedure 31 of EIA-364. The following details and exceptions shall apply.

a. Method II.

b. Test condition letter: A.

c. The mated connectors shall be mounted in a horizontal position.

Downloaded from http://www.everyspec.com

4.6.19 EMI shielding (see 3.5.19). When tested as specified the EMI shielding capabilities shall not be less than the values specified in 3.5.19. The following conditions shall apply:

a. Test sample. A size 2 plug and receptacle shell shall be used for this test. Shells shall be modified by removing all excess metals except the housing and flange around insert cavity B (see figure 19). Peripheral and EMI seals shall remain on the plug shell. Alternate test fixturing may be used subject to the approval of the procuring activity.

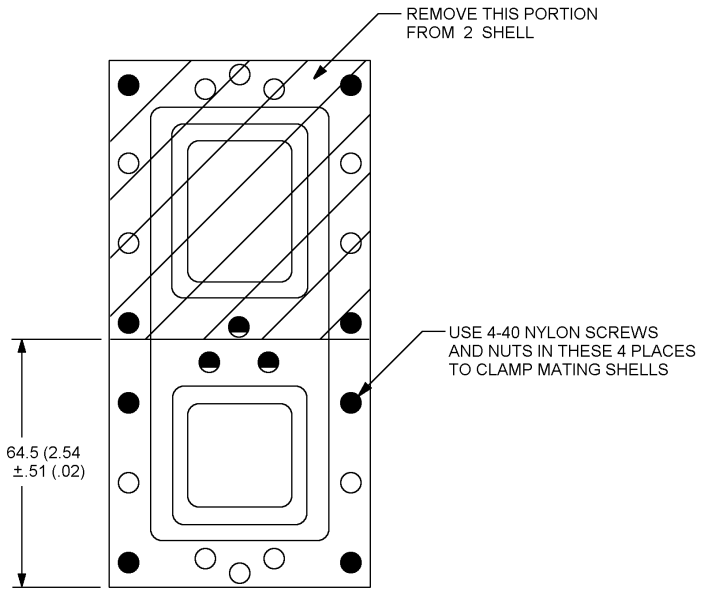

NOTES:
1. Dimensions are in millimeters.
2. Inch equivalents are given for information only.

FIGURE 19. Connector preparation - EMI test.

b. Sample preparation. The inserts may be removed from the connectors under test or the contacts removed and a hole drilled through the inserts to accommodate a center conductor of suitable geometry to provide a good 50 ohm impedance match with the inside diameter of the mated connector shells, the following details apply:

1. Tapered transition may be used to provide a means of changing diameters without introducing significant discontinuities in the line.

2. The maximum VSWR in the inner coaxial line shall be 1.5:1.

3. The outer shell of the test fixture shall be so constructed as to provide a good 50 ohm impedance match with the outside shape of the mated connector shells and the transition section.

4. The maximum VSWR of the outer coaxial line shall be 1.5:1.

Downloaded from http://www.everyspec.com

5. Four nylon screws and nuts (size 4-40) shall be used to clamp the mating connector shells together to simulate normal LRU hold down force.

c. Test procedure. The EMI shielding effectiveness of mated connectors shall be measured in a triaxial radio frequency leakage fixture as shown on figure 20. The following details apply:

1. The EMI leakage from the conductor inside the connector in the same inner coaxial line into the outer coaxial line shall be measured at the frequencies specified in table III within a frequency accuracy of ±5 percent.

2. The level of detected signal power shall be indicated by tunable radio frequency field intensity meter isolated from the test circuit by a 3 to 10 dB pad. Care shall be taken to ensure that the signal is a result of EMI leakage from within the mated connector and not due to a faulty termination inside the fixture.

3. All terminations inside the fixture, whether to the transition section or between internal conductors, shall have a leakage at least 10 dB less than the test requirements.

4. The signal source shall be set to the desired frequency.

5. The signal shall be fed through a 3 to 10 dB isolation pad to a parallel circuit consisting of a coaxial switch (DPDT) so connected that the signal can be manually or electronically fed alternately to the fixture and to a variable 100 dB reference attenuator.

6. The attenuator shall be adjustable in 1 dB steps and calibrated to ±3 dB.

7. A sliding circumferential short shall be positioned behind the connector on the signal input end of the fixture to provide for turning the outer coaxial line for maximum output at each test frequency. The allowable travel of this short shall be greater than 1/2 wavelength at the lowest test frequency of 1.5 meters minimum for 100 MHz. The inner coaxial line shall be terminated in a fixed 50 – ohm load impedance behind the connector at the output end of the fixture.

8. The connector used to couple together the various elements of the test system shall be of a low-leakage type which have a nominal impedance of 50 ohms, a VSWR of less that 1.5:1 and a minimum leakage attenuation of 100 dB. The output impedance of the signal source and the input impedance of the detector shall be nominally 50 ohms with a maximum VSWR of 1.5:1.

9. The input and output VSWR of the standard attenuator shall be less than 1.5:1 in the 20 dB to 100 dB range.

10. The relative signal level in the variable attenuator shall be equaled to the signal level through the leakage fixture by adjusting the attenuator. The signal loss in the fixture can then be read from the setting on the variable attenuator.

Downloaded from http://www.everyspec.com

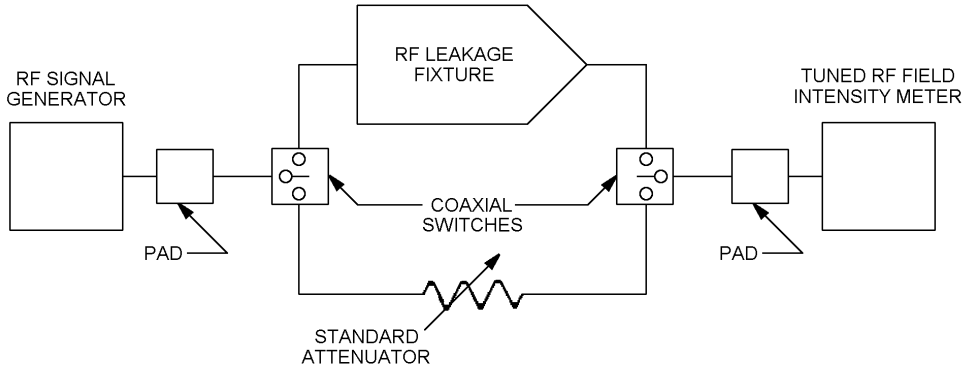

SCHEMATIC TEST SYSTEM

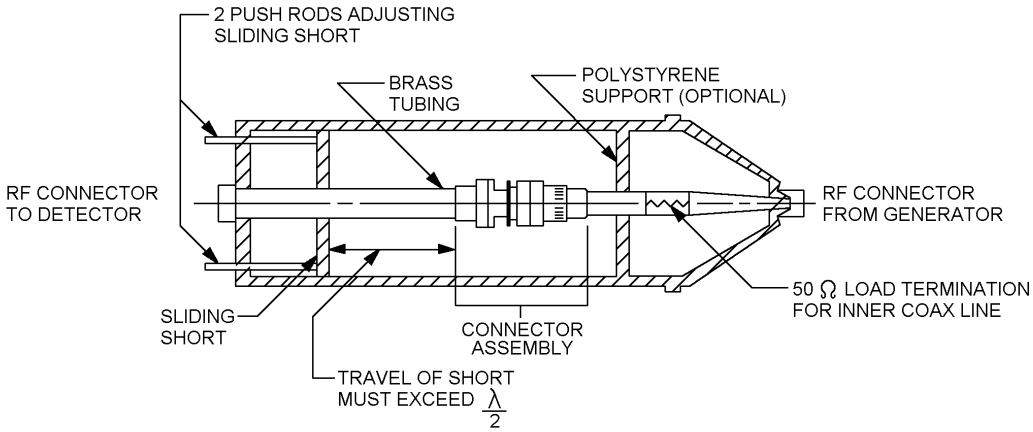

FIGURE 20. EMI test setup.

4.6.20 Ozone exposure (see 3.5.20). The unmated connectors shall be subjected to the test specified in test procedure 14 of EIA-364. At the end of the specified period, the samples shall be examined for signs of ozone deterioration as specified.

4.6.21 Fluid immersion (see 3.5.21). Connector samples shall be subjected to the test specified in test procedure 10 of EIA-364. Following the fluid immersion cycles, the connectors shall be tested for mating and separating forces as specified in 4.6.4 and dielectric withstanding voltage at sea level as specified in 4.6.12.1 within 3 hours. The following details apply:

a. Connectors shall be wired.

b. One connector shall be immersed in each fluid.

c. For fluid (L), the temperature of the oven for the conditioning phase shall be 150°C.

Downloaded from http://www.everyspec.com

4.6.22 Contact walk-out (see 3.5.23). Two contacts in each plug and receptacle shall be tested. The contacts shall be crimped to stranded steel cable of an appropriate size and installed in the connector. The unmated connector shall be mounted in a test fixture as shown on figure 21. A 1.4 kilogram (3.09 pound) load shall be applied to the cable. One 360° rotation of the fixture with the connector mounted shall constitute one cycle. The connector shall be subjected to 100 cycles at a rate of 10 to 20 cycles per minute. Contact cavities used in this test shall be excluded from further testing.

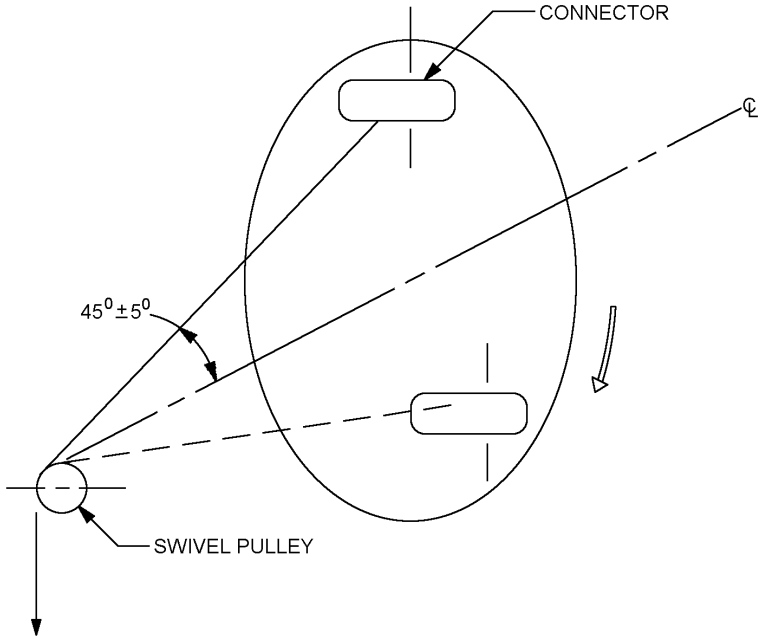

FIGURE 21. Contact walkout test arrangement.

4.6.23 Altitude immersion (see 3.5.22). Mated connector shall be tested in accordance with test procedure 03 of EIA-364. The following details shall apply:

a. All wire ends shall be located within the chamber and exposed to the chamber atmosphere but not submerged or sealed.

b. At the end of the third cycle while the connectors are still submerged in the solution, at ambient temperature, the dielectric withstanding voltage test shall be performed as specified in 4.6.12.1.

Downloaded from http://www.everyspec.com

4.6.24 Installing and removal tool abuse (see 3.5.24). Tools used shall be in accordance with MIL-I-81969. Five contact cavities in each insert shall be subjected to each of the tests specified in steps a through d. Different contact cavities shall be used for each test. Should a tool become damaged during any of the testing, it shall be replaced. Failure of a tool shall not constitute a test failure. Contact cavities used in this test shall not be subjected to further testing.

a. Removal tool rotation. The applicable contact removal tool shall be inserted as if to remove a contact and an axial load of 13 newtons (2.92 lbf) shall be applied. With the force applied, the tool shall be rotated 180° maximum and then removed, also removing the contact. The contact shall be reinserted. These steps shall be repeated three times on each of the five contacts selected.

b. Installing tool rotation. The contact shall first be removed. With the applicable contact installing tool, the contact shall be reinstalled and an axial load of 13 newtons (2.92 lbf) applied to the tool. With the force applied, the tool shall be rotated 180° maximum and then removed. These steps shall be repeated three times on each of the five contacts selected.

c. Installing tool thrust. The contact shall first be removed. With the applicable contact installing tool, the contact shall be reinstated and an axial load of 45 newtons (10 lbf) applied to the tool. These steps shall be performed only once on each of the five contacts selected. A new tool shall be used for each contact.

d. Removal tool thrust. The applicable contact removal tool shall be inserted as if to remove the contact and an axial load of 45 newtons (10 lbf) shall be applied to the tool. The tool shall then be removed, also removing the contact. These steps shall be performed only once on each of the five contacts selected. A new tool shall be used for each contact.

4.6.25 Contact stability (see 3.5.25). The total displacement of the contacts specified shall not exceed the values specified in 3.5.25 the following conditions shall apply:

a. The unmated connectors shall have 10 percent (but not less than one) of their contacts subjected to this test.

b. Gauges conforming dimensionally to figure 22 shall be used.

c. The connector shall be held in a holding device.

d. A moment shall be applied to the exposed rod as shown on figure 22.

e. The rate of load application shall not exceed 0.5 millimeter (.02 inch) per second.

f. The total gauge tip displacement shall be measured as shown on figure 23.

Contact cavities used in this test shall be excluded from further testing.

Downloaded from http://www.everyspec.com

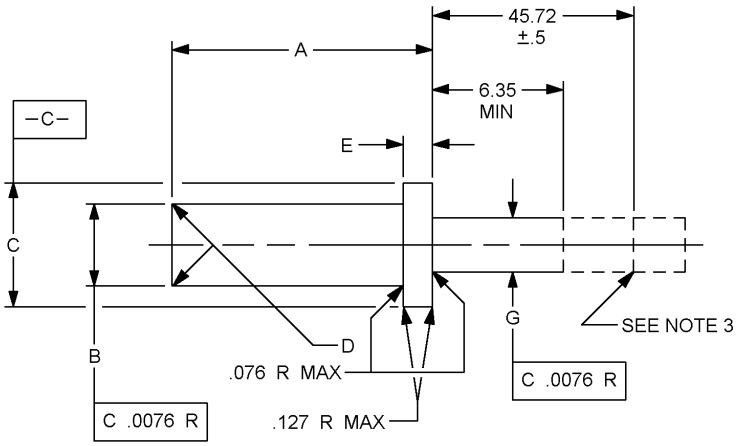

CONFIGURATION A

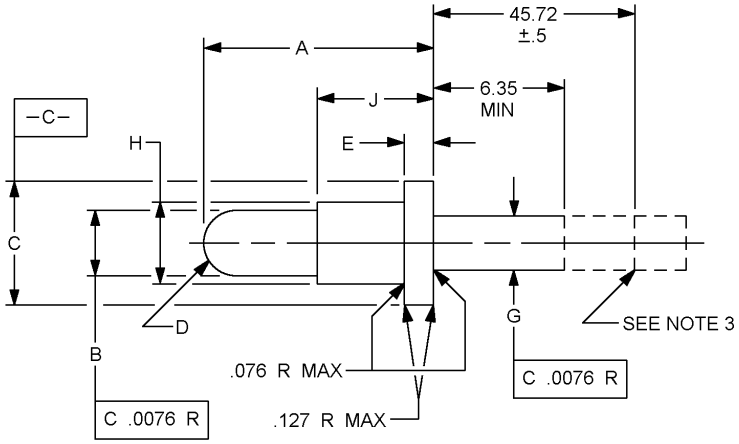

CONFIGURATION B

mm	Inches	mm	Inches	mm	Inches
0.0051	.0002	1.562	.0615	3.8354	.1510
0.0076	.0003	1.7272	.0680	3.9624	.1550
0.0127	.0005	1.7526	.0690	4.7244	.1860
0.0750	.0030	2.0328	.0800	5.0419	.1935
0.1020	.0040	2.3620	.0930	5.1250	.2018
0.1270	.0050	2.6162	.1030	6.3500	.2500
0.8382	.0330	2.7940	.1100	10.1350	.4010
0.9910	.0390	3.3020	.1300	15.6720	.6170
1.2700	.0500	3.7592	.1480	17.2974	.6810
1.524	.0600				

FIGURE 22. Gauge configuration.

Downloaded from http://www.everyspec.com

Contact size	A +.0127 -.0000	B DIA +.0051 -.0000	C DIA +.0051 -.0000	D RAD	E +.0000 -.0051	G DIA. +.0000 -.0051	H DIA +.0051 -.0000	Figure	J +.0127 -.0000
22	10.1850	1.5240	1.7272	.102/.000	.8382	1.2700		21A	
20	15.6720	.9910	2.0828	Spherical	.8382	1.7272	1.7526	21B	3.9624
16	17.2974	1.5620	3.3020	Spherical	.8382	2.6162	2.7940	21B	5.1250
12	17.2974	2.3620	4.7244	Spherical	.8382	3.8354	3.7592	21B	5,0419

NOTES:
1. Dimensions are in millimeters.
2. Inch equivalents are given for information only.
3. Material: Hardened tool steel.
4. Finish: 32 microinches polished.
5. Design of rear extension is optional, but must have a groove provided as indicated.

FIGURE 22. Gauge configuration - Continued.

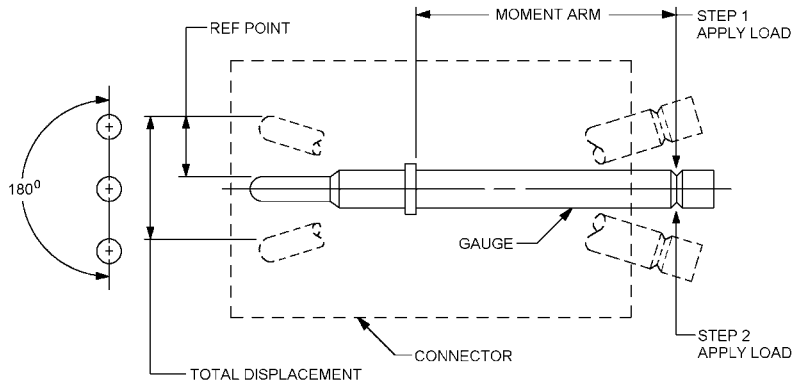

Contact size	Moment Newton meter	Inch-ounce
22	0.03	4.5
20	0.20	28.4
16	0.25	35.5
12	0.25	35.5

Step 1 - Apply load to determine reference point.
Step 2 - Apply load in opposite direction and measure total displacement.

FIGURE 23. Contact stability test arrangement.

Downloaded from http://www.everyspec.com

4.6.26 Temperature life with contact loading (see 3.5.26). Contacts shall maintain their previously measured location as specified in 3.5.26 the following conditions shall apply:

a. Connector pairs shall have one mating pair of contacts removed from an untested cavity and replaced with contacts crimped or otherwise attached to steel cable or steel-cored copper wire (copper-weld, or equivalent) of an appropriate size.

b. The axial location of these contacts shall be measured with a load of approximately 0.91 kg (2 pounds) applied to seat the contact back against the retention device.

c. A weight equal to 50 percent of the axial load for the applicable contact size shall be suspended freely from each steel wire.

d A current of 100 milliamperes maximum shall be applied to the test contacts and a suitable instrument shall be used to monitor the circuit for discontinuities in excess of 1 microsecond.

e. The mounted connector shall then be exposed to +150°C +5°C° for 1,000 hours minimum.

f. After the connectors return to ambient temperature, they shall be unmated and the contact locations remeasured with approximately 0.91 kg (2 pound) axial load applied to seat the contact back against the retention device.

g. The connector shall be mounted in a fixture as shown on figure 24.

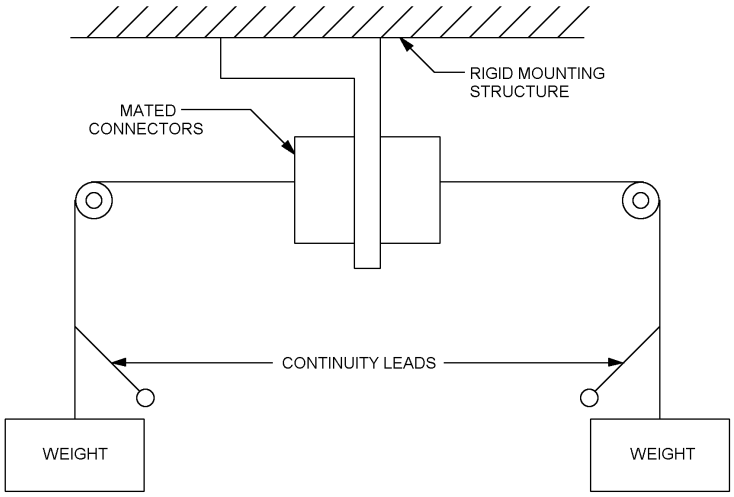

FIGURE 24. Typical fixturing for temperature life with contact loading.

Downloaded from http://www.everyspec.com

4.6.27 Nonmegnetic materials (see 3.5.2). Connectors shall be tested in accordance with test procedure 54 of EIA-364.

4.6.28 Size 8 concentric twinax cavity grounding (see 3.5.27). Unmated connectors, with size 8 concentric twinax contacts installed, shall be tested in accordance with test procedure 83 of EIA-364. The following details and exceptions shall apply.

a. Points of measurements.

1. Front surface of connector mounting flange and size 8 concentric twinax outer body (2.54 mm maximum from rear edge of the contact).

2. To facilitate testing, voltage probes may be so positioned as to include a reasonable length of cable, providing the resistance of the additional length of cable is subtracted from the resistance value obtained.

4.7 Post test examination. The tested connectors and contacts shall be examined to determine the effects of previous testing. Any evidence of cracking, loosening of parts, carbon tracking, excess wear, or missing parts shall be recorded.

5. PACKAGING

5.1 Packaging requirements. For acquisition purposes, the packaging requirements shall be as specified in the contract or order (see 6.2). When actual packaging of materiel is to be performed by DoD personnel, these personnel need to contact the responsible packaging activity to ascertain requisite packaging requirements. Packaging requirements are maintained by the Inventory Control Point's packaging activity within the Military Department or Defense Agency, or within the Military Department's or Defense Agency's automated packaging files, CD-ROM products, or by contacting the responsible packaging activity.

6. NOTES

(This section contains information of a general or explanatory nature that may be helpful, but is not mandatory.)

6.1 Military rationale. The connectors covered by this specification are military unique because they must be able to operate satisfactory at high altitude 50,000 feet (15.2 km), 500 hours of salt spray, vibration testing functional and endurance, 30 g's of shock, and temperatures ranging from -65 to +125°C. Commercial electronic components are not designed to withstand such extreme and sudden environmental conditions and would experience catastrophic failure.

6.2 Intended use. An individual line replaceable unit (LRU) cannot have multiple connectors, but each connector’s shell variant can accommodate multiple inserts. Inserts are limited to two sizes, but each size of insert will accommodate multiple pin/socket, and coaxial contact configurations.

6.2.1 Tin whisker growth. The use of pure tin may exhibit tin whisker growth problems (days to months to years) after manufacture. Tin whiskers can develop under typical operating conditions on any product type that uses lead-free pure tin coatings. Conformal coatings applied over top of a whisker-prone surface will not prevent the formation of tin whiskers. Alloys of 3 percent lead have shown to inhibit the growth of tin whiskers.

Downloaded from http://www.everyspec.com

6.3 Acquisition requirements. Acquisition documents must specify the following:

a. Title, number, and date of the specification.

b. Title, number, and date of the applicable specification sheet, and the complete PIN (see 1.2.1).

c. First article contract requirements.

d. Whether contacts, sealing plugs, and tools are included (see 3.4.1, 3.4.3.8, and 3.4.2).

e. Certificate of compliance covering materials, when required.

f. Issue of DODISS to be cited in the solicitation, and if required, the specific issue of individual documents referenced (see 2.1 and 2.2).

6.4 Test equipment and inspection facilities. Test and measuring equipment and inspection facilities of sufficient accuracy, quality and quantity to permit performance of the required inspection are to be established and maintained by the contractor. The establishment and maintenance of a calibration system to control the accuracy of the measuring and test equipment are to be in accordance with ANSI Z540.1.

6.5 Definitions.

6.5.1 Rated temperature. Rated temperature is the maximum value of the temperature range and also the maximum hot spot temperature of the connector.

6.5.2 Electromagnetic Interference. Any electromagnetic disturbance, phenomenon, signal, or emission that causes or can cause undesired response of electrical or electronic equipment.

6.5.3 EMI backshell. An EMI backshell is a device, which is designed to control electromagnetic interference caused by the radiation of signals at interconnecting areas.

6.6 Environmentally preferable material. Environmentally preferable materials should be used to the maximum extent possible to meet the requirements of this specification. Table IX lists the Environmental Protection Agency (EPA) top seventeen hazardous materials targeted for major usage reduction. Use of these materials should be minimized or eliminated unless needed to meet the requirements specified herein (see section 3).

TABLE IX. EPA top seventeen hazardous materials.

Benzene	Dichloromethane	Tetrachloroethylene
Cadmium and Compounds	Lead and Compounds	Toluene
Carbon Tetrachloride	Mercury and Compounds	1,1,1 - Trichoroethane
Chloroform	Methyl Ethyl Ketone	Trichloroethylene
Chromium and Compounds	Methyl Isobutyl Ketone	Xylenes
Cyanide and Compounds	Nickel and Compounds	

Downloaded from http://www.everyspec.com

6.7 Subject term (key word) listing.

Beryllium copper
Cadmium
EMI feature
EMI Shielding effectiveness
Gold
Nickel
Peripheral seal
Resilient material
Shell

6.8 Changes from previous issue. Marginal notations are not used in this revision to identify changes with respect to the previous issue due to the extensiveness of the changes.

Downloaded from http://www.everyspec.com

APPENDIX A

CONTACT AND TOOL CROSS REFERENCE

A.1 SCOPE

A.1.1 Scope. This appendix is intended for cross-referencing contacts and tools for MIL-C-83527 connectors. This appendix is not a mandatory part of the specification. The information contained herein is intended for guidance only.

A.2 APPLICABLE DOCUMENTS. This section is not applicable to this appendix.

A.3 Contacts and tools. Contacts and applicable tools are specified in table A1.

TABLE A1. Contacts and tools.

Contact size and type	Pin	Socket	Installing tool	Removal tool	Crimp tool	Crimp die or positioner
22-20	M39029/93	M39029/94	M81969/1-01	M81969/1-01	M22520/2-01	M22520/2-23
20-20	M39029/93	M39029/94	M81969/1-02	M81969/1-02	M22520/2-01 M22520/7-01	M22520/2-08 M22520/7-02
16-16	M39029/93	M39029/94	M81969/1-03	M81969/1-03	M22520/1-01 M22520/7-01	M22520/1-02 Blue M22520/7-03
12-12	M39029/93	M39029/94	M81969/4-01	M81969/28-02	M22520/1-01	M22520/1-11
1 Coax	M39029/97	M39029/98	----	M81969/XX	M22520/5-01	M22520/5-25
5 Coax	M39029/99	M39029/100	----	M81969/28-01	Inner M22520/2-01 Outer M22520/5-01	K-345 Setting no.5 Daniels manufacturing or approved equivalent
8 Concentric twinax	222190-4 Tyco Amp (00779)	222191-4 Tyco Amp (00779)	M81969/14-06	M81969/14-06	Inner M22520/2-01 Intermediate And Outer M22520/5-01	Inner M22520/2-37 Intermediate Outer M22520/5-104 M22520/5-200

Downloaded from http://www.everyspec.com

APPENDIX B

CONTACT SIZE AND TYPE

B.1 SCOPE

B.1.1 Scope. This appendix is intended for reference to specify all contact sizes and types applicable to MIL-DTL-83527 connectors. This appendix is not a mandatory part of the specification. The information contained herein is intended for guidance only.

B.2 APPLICABLE DOCUMETS. This section is not applicable to this appendix.

B.3 GENERAL REQUIREMENTS

B.3.1 Contact size and type. See table BI.

TABLE BI. Contact size and type.

Size	Termination		Design/application		
	Crimp	Solder	Solid	Shielded	Data Bus
22	X	X	X		
20	X	X	X		
16	X	X	X		
12	X		X	X	
8	X				X
5	X			X	
1	X			X	

Downloaded from http://www.everyspec.com

CONCLUDING MATERIAL

Custodians:
Army - CR
Navy - AS
Air Force - 11
DLA - CC

Review activity:
Air Force - 99

Preparing activity:
DLA - CC

(Project 5935-4337-000)

Downloaded from http://www.everyspec.com

STANDARDIZATION DOCUMENT IMPROVEMENT PROPOSAL

INSTRUCTIONS

1. The preparing activity must complete blocks 1, 2, 3, and 8. In block 1, both the document number and revision letter should be given.
2. The submitter of this form must complete blocks 4, 5, 6, and 7, and send to preparing activity.
3 The preparing activity must provide a reply within 30 days from receipt of the form.

NOTE: This form may not be used to request copies of documents, nor to request waivers, or clarification of requirements on current contracts. Comments submitted on this form do not constitute or imply authorization to waive any portion of the referenced document(s) or to amend contractual requirements.

I RECOMMEND A CHANGE:	1. DOCUMENT NUMBER MIL-DTL-83527B	2. DOCUMENT DATE *(YYYYMMDD)* 2003/07/15

3. DOCUMENT TITLE

CONNECTORS, PLUG AND RECEPTACLE, ELECTRICAL, RECTANGULAR MULTIPLE INSERT TYPE, RACK TO PANEL, ENVIRONMENT RESISTING, 150°C TOTAL CONTINUOUS OPERATING TEMPERATURE, GENERAL SPECIFICATION FOR

4. NATURE OF CHANGE *(Identify paragraph number and include proposed rewrite, if possible. Attach extra sheets as needed.)*

5. REASON FOR RECOMMENDATION

6. SUBMITTER

a. NAME *(Last, First, Middle Initial)*	b. ORGANIZATION	
c. ADDRESS *(Include zip code)*	d. TELEPHONE *(Include Area Code)* (1) Commercial (2) DSN *(if applicable)*	7. DATE SUBMITTED *(YYYYMMDD)*

8. PREPARING ACTIVITY

a. NAME	b. TELEPHONE *(Include Area Code)*
Defense Logistics Agency **Defense Supply Center, Columbus**	(1) Commercial **614-692-0538** (2) DSN **850-0538**
c. ADDRESS *(Include Zip Code)* **DSCC-VAI** **P.O. Box 3990** **Columbus, Ohio 43216-5000**	**IF YOU DO NOT RECEIVE A REPLY WITHIN 45 DAYS, CONTACT:** **Defense Standardization Program Office (DLSC-LM)** **8725 John J. Kingman Road,Suite 2533** **Fort Belvoir, Virginia 22060-6621** **Telephone (703) 767-6888 DSN 427-6888**