Downloaded from http://www.everyspec.com

METRIC

MIL-DTL-83526/21C
23 September 2014
SUPERSEDING
MIL-DTL-83526/21B
20 June 2013

DETAIL SPECIFICATION SHEET

# CONNECTOR, FIBER OPTIC, CIRCULAR HERMAPHRODITIC, BULKHEAD, LOW PROFILE WITHOUT STRAIN RELIEF, JAM-NUT MOUNT, 2 AND 4 POSITIONS, EXPANDED BEAM

This specification is approved for use by all Departments and Agencies of the Department of Defense.

The requirements for acquiring the product described herein shall consist of this specification sheet and MIL-DTL-83526

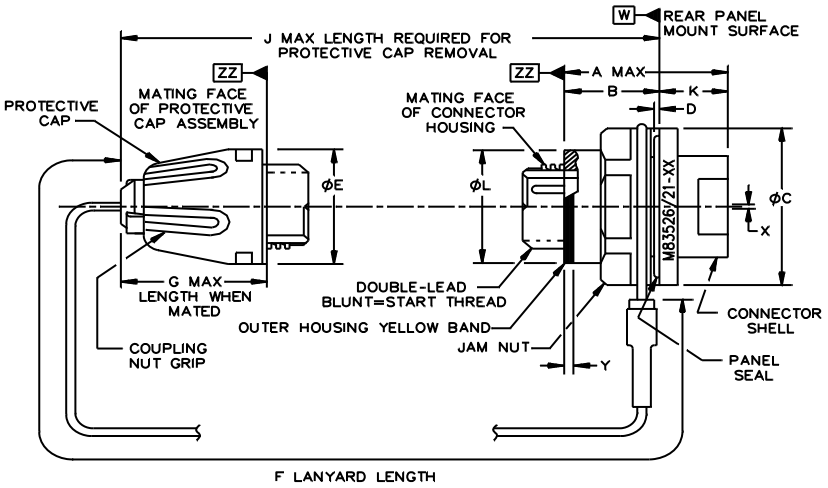


NOTE: See table I for dimensional values.

FIGURE 1. Jam-nut mount low-profile bulkhead hermaphroditic connector with protective cap.

AMSC N/A

FSC 6060

Downloaded from http://www.everyspec.com



TABLE I. Jam-nut mount bulkhead hermaphroditic connector with protective cap dimensions.

| Designator | Descriptions | Dimensions 1/ | | | |
|---|---|---|---|---|---|
| | | Maximum | | Minimum | |
| | | mm | inches | mm | inches |
| A | Length from mating face to back end of connector shell | 32.2 | 1.27 | --- | --- |
| B | Length from mating face to connector panel-mount surface | 18.5 | .73 | 17.5 | .69 |
| C | Diameter of connector panel flange | 37 | 1.46 | --- | --- |
| D | Panel seal compression | 0.6 | .02 | 0.3 | .01 |
| E | Diameter of protective cap coupling nut | 27.2 | 1.1 | | |
| F | Length of lanyard 2/ | --- | --- | --- | --- |
| G | Length from mating face to installed end of protective cap | 29 | 1.1 | --- | --- |
| J | Length required from panel mounting surface for protective cap removal | 62 | 2.44 | --- | --- |
| K | Length of connector rearward from rear panel mounting surface | 14.4 | .57 | --- | --- |
| L | Diameter of outer housing mating sleeve | 26.7 | 1.05 | --- | --- |
| X | Diameter of individual fiber optic cables | 1.5 | .06 | --- | --- |
| Y | Width of yellow band | --- | --- | 2 | .08 |

1/ Inch equivalents may contain rounding inaccuracies and are given for reference purposes only.
2/ Lanyard length to be minimum necessary to facilitate ease of installation and removal of protective cap.

Downloaded from http://www.everyspec.com



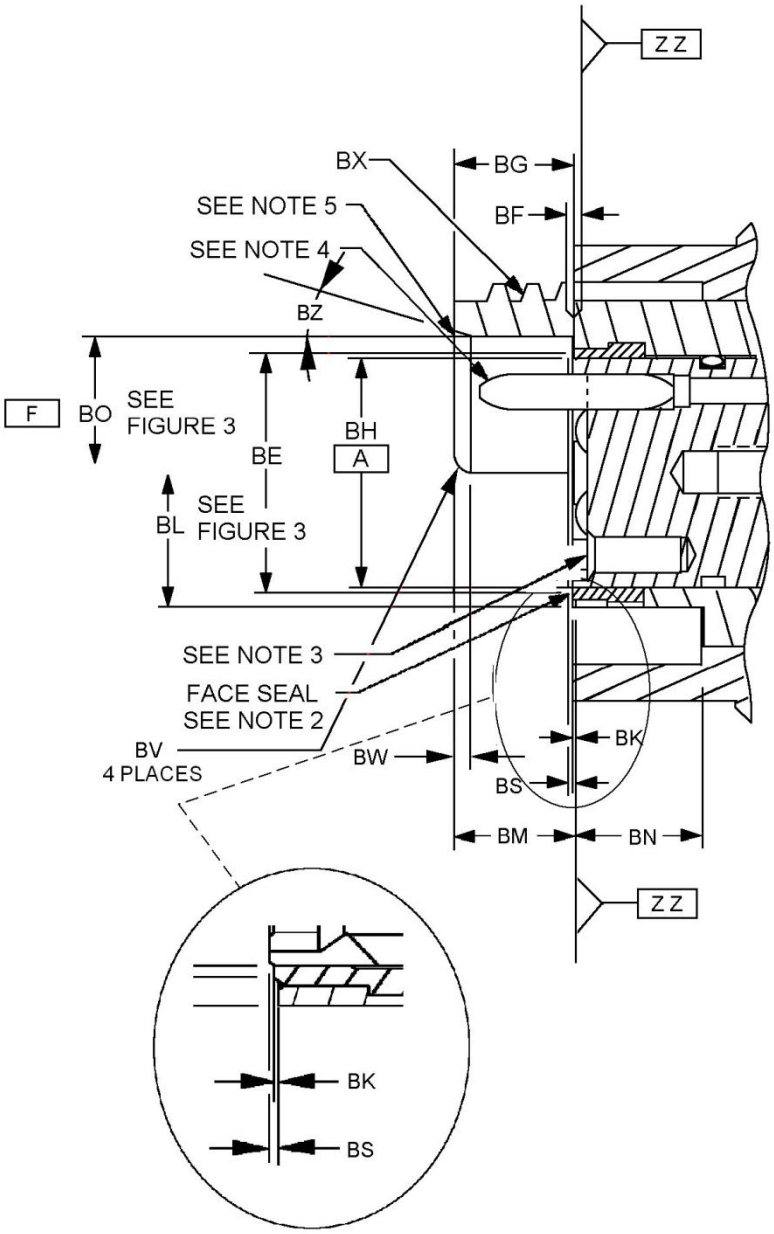


NOTES:

1. See table II for dimensions.
2. Face seal configuration optional provided all performance requirements are met.
3. Chamfer 2.6 mm OD min X 45°.
4. Pin geometry is optional provided all performance requirements are met.
5. Break all sharp edges.

FIGURE 2. Bulkhead connector interface dimensions (section view A-A, see figure 3).

Downloaded from http://www.everyspec.com



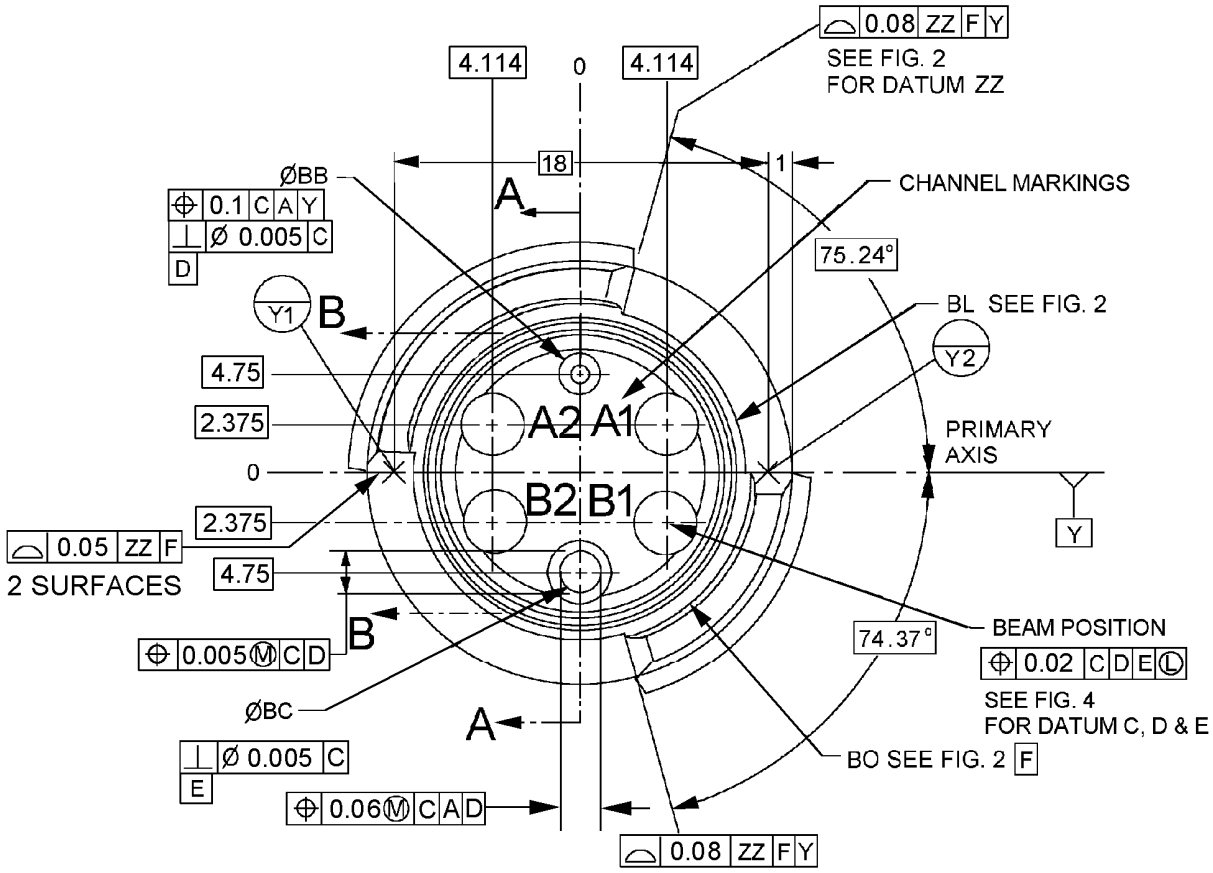


NOTE: See table II for dimensional values.

FIGURE 3. Connector mating face dimensions (4 channel).

Downloaded from http://www.everyspec.com



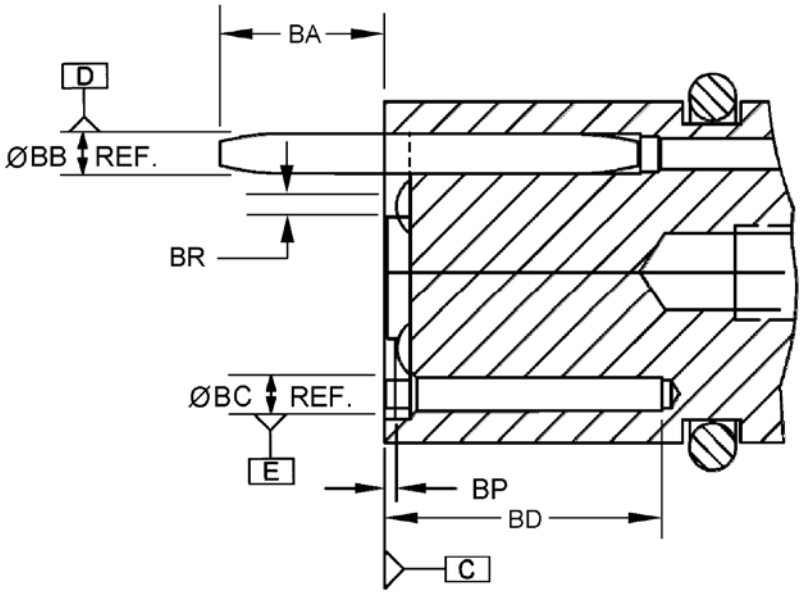


NOTE: See table II for dimensional values.

FIGURE 4. Expanded beam insert (section view B-B, see figure 3).

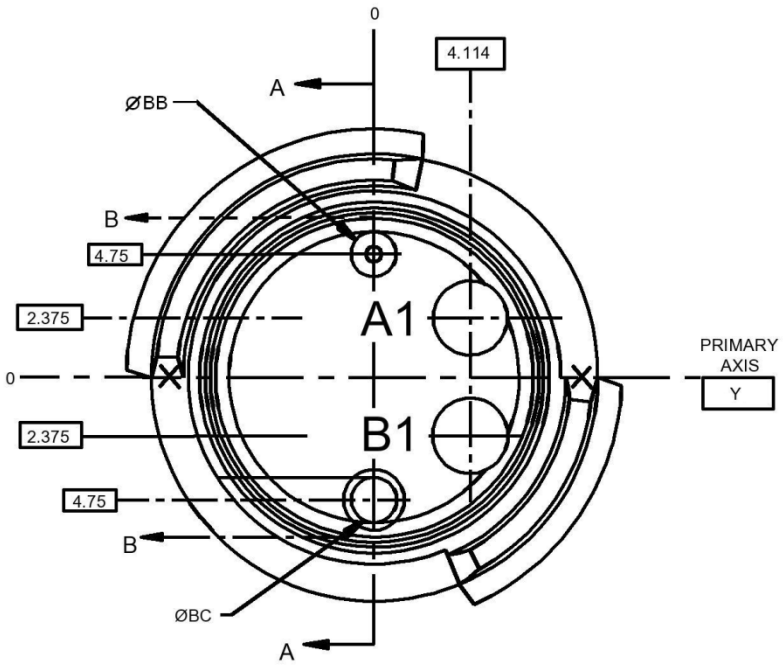


NOTE: See table II for dimensional values.

FIGURE 5. Connector mating face dimensions (2 channel).

Downloaded from http://www.everyspec.com



TABLE II. Bulkhead connector interface dimensions.

| Designator | Descriptions | Dimensions 1/ | | | |
|---|---|---|---|---|---|
| | | Maximum | | Minimum | |
| | | mm | inches | mm | inches |
| BA | Alignment pin protrusion | 5.1 | .201 | 4.9 | .193 |
| BB | Alignment pin diameter | 2 | .08 | 1.998 | .078 |
| BC | Alignment receptacle diameter | 2.018 | .080 | 2.013 | .079 |
| BD | Alignment receptacle depth | | | 5.3 | .21 |
| BE | Facial seal diameter centerline | 14.02 | .552 | 13.945 | .549 |
| BF | Facial seal protrusion from front housing | 0.35 | .013 | 0.1 | .004 |
| BG | Front housing thread length | 7.1 | .280 | 6.9 | .272 |
| BH | Insert outer diameter | 13.34 | .525 | 13.29 | .523 |
| BK | Offset between connector mating face and front edge of outer housing | +0.3 | +.01 | -0.3 | -.01 |
| BL | Front housing flange recess diameter | 15.6 | .61 | 15.5 | .61 |
| BM | Front housing threaded flange protrusion | 7.1 | .280 | 6.9 | .272 |
| BN | Front housing flange recess depth | 7.6 | .299 | 7.3 | .287 |
| BO | Threaded flange protrusion inside diameter | 15.95 | .628 | 15.80 | .622 |
| BP | Lens surface recess depth from insert mating face | 0.5 | .020 | 0.35 | .014 |
| BS | Insert mating face protrusion | 0.65 | 0.026 | 0.2 | .008 |
| BR | Optical axis position tolerance | See figure 4 feature control frame | | | |
| BV | Flange corner | 1 ± 0.2 X 45˚ chamfer or 1 ± .2 rounded | | | |
| BW | Flange chamfer depth | 1.2 | .05 | 0.8 | .03 |
| BX | Front housing thread | Tr 22.02 x 4 (P2) – Modified external thread, in accordance with ISO 2903,<br>Minor diameter: 20.14/20.04 mm (.793/.789 inches)<br>Major diameter: 22.02/21.92 mm (.867/.863 inches)<br>Pitch diameter: 20.812/20.638 mm (.819/.812 inches) | | | |
| BZ | Flange chamfer angle | 15˚ ± 3˚ | | | |

1/ Dimensions are given in mm. NOTE; inch measurements are provided for reference and as a result of rounding inaccuracies could prevent Intermateability.

2/ Focal length is analytically derived through optical modeling (ZEMAX or equivalent).

Downloaded from http://www.everyspec.com



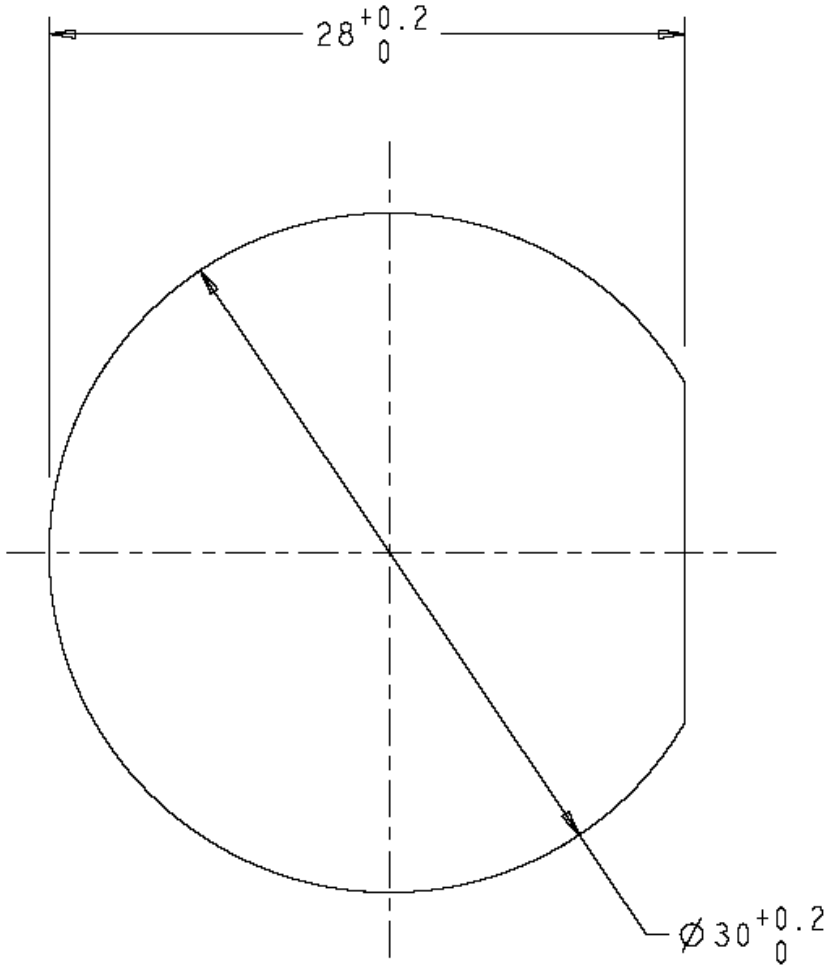


| Millimeter | Inch |
|---|---|
| 0.2 | .0079 |
| 28 | 1.10 |
| 30 | 1.18 |

NOTES:

1. There is a rotational relationship between D-flat and connector mating face as shown in figure 4.
2. Panel thickness: 6.5 mm (.25 inches) maximum to 3 mm (.11 inches) minimum.

FIGURE 6. Recommended panel cutout

Downloaded from http://www.everyspec.com



REQUIREMENTS:

Dimensions required for intermateability: See figure 2 through figure 5 and table I and table II. Features not defined do not directly impact intermateability.

Materials: See table III. All materials must meet nuclear, biological and chemical decontamination requirements described herein.

TABLE III. Materials. 1/

| Part description | Material | Finish 2/ |
|---|---|---|
| Insert body | ARCAP AP1D or 303 SS | Passivated when 303 SS is selected |
| Alignment pin | 316 stainless steel | Passivated |
| Facial seal | Fluorosilicone rubber 3/ | None |
| Panel seal | Fluorosilicone rubber 3/ | None |
| Front housing | Aluminum 6082-T6, 6061-T6 or 2042 as long as T3 or T4 is not used | Teflon impregnated hard anodize or hard anodize; reference MIL-A-8625 type III 4/ |
| Connector shell | Aluminum 6082-T6, 6061-T6 or 2042 as long as T3 or T4 is not used | Chromate conversion coated zinc in accordance with ASTM B840 or ASTM 841 over electroless nickel in accordance with ASTM B733 5/ |
| Jam nut | Aluminum 6082-T6, 6061-T6 or 2042 as long as T3 or T4 is not used | Chromate conversion coated zinc in accordance with ASTM B840 or ASTM B841 over electroless nickel in accordance with ASTM B733 5/ |
| Protective cap 6/ | Nylon, aluminium 6082-T6, 6061-T6 or 2042 as long as T3 or T4 is not used | For aluminum, hard anodize in accordance with MIL-A-8625 type III |
| Lanyard | Nylon over galvanized steel or stainless steel stranded wire | N/A |

1/ All materials and plating must meet material compatibility requirements of MIL-STD-889 for the connector body material.
2/ All finishes must meet the color requirements and pass all environmental requirements.
3/ Material optional provided all performance requirements are met.
4/ Provided performance requirements are met
5/ .Non-reflective brown, non-reflective green, non-reflective black and non-reflective grey camouflage colors are acceptable.

Epoxy: Epoxy is not furnished with the connector. When used, epoxy shall meet the requirements of MIL-DTL-83526. Cure according to manufacturer's recommended time and temperature profile.

Threads: Applicable, except that the separable interface coupling mechanism shall employ a modified metric trapezoidal thread as detailed in figure 2 and table II.

Downloaded from http://www.everyspec.com



Protective cap: Protective cap shall:

a. Mate with the connector and with protective caps.

b. Pass crush test when mated with a connector and when mated with another protective cap.

Lanyard: Lanyard length to be minimum necessary to facilitate easy installation and removal of the protective cap. Lanyard coating must meet nuclear, biological and chemical decontamination requirements as described herein.

Termini: Termini are not exposed at the separable interface and may be unique in design between manufacturers provided all performance requirements are met.

Cable service loop: Provision for cable service loop is not required.

Tools: Tools are not supplied with the connector, but shall be available from the manufacturer.

Thread lubricant: Thread lubricants used in the construction of the connectors shall satisfy the following criteria:

a. Lubricants shall be permanent and shall not require replacement during the lifetime (see mating durability) of the connector.

b. Lubricants shall not migrate to the optical interfaces resulting in the degradation of optical performance.

c. Lubricants shall be useful over the environmental conditions specified herein.

d. Lubricants shall not be affected by cleaning solvents.

Wherever MIL-DTL-83526 specifies “change in insertion loss”, change in optical transmittance shall be measured and recorded.

Qualification inspection insertion loss: Applicable except the average insertion loss for each individual channel for initial insertion loss shall be no greater than 1.5 dB for multimode and 2.0 dB for single mode. One average per channel shall be recorded. Under all conditions the maximum insertion loss shall be 2.0 dB for multimode and 2.5 dB for single mode.

Discontinuities: Applicable, except testing shall be in accordance with TIA-455-32 test condition A. A discontinuity shall be a reduction of strength of 0.5 dB or more for a duration of 1 μs or more.

Crosstalk: Applicable, except test in accordance with TIA-455-42, -60 dB maximum.

Return loss: Applicable for single mode only. The return loss of any single mode mated pair of connectors shall be not less than 31 dB for any channel and shall be not less than 34 dB for any unmated channel.

Focal length: Focal length shall be analytically derived through optical modeling (ZEMAX or equivalent) and shall be within the limits specified in table IV.

Downloaded from http://www.everyspec.com



TABLE IV. Focal length

| Mode | Focal length mm | |
|---|---|---|
| | Min | Max |
| SM | 1.5 | 1.7 |
| MM | 1.5 | 1.7 |

Weight: 300.5 grams (10.6 ounces) maximum.

Color: Non-reflective brown, non-reflective green, non-reflective black and non-reflective grey camouflages are acceptable colors. Cadmium is not permitted. No color is specified for the insert.

Identification marking:

PIN construction: M 83526 / 21 - XX

Military designator

Basic specification

Specification sheet

Connector configuration, see table V

TABLE V Connector configuration.

| 83526/21-XX | Channels | Fiber cladding size | Figure | Wavelength ± 30 nm | Mode |
|---|---|---|---|---|---|
| -01 | 4 | 125 | 5 | 850/1,300 nm | Multi |
| -02 | 4 | 125 | 5 | 1,310 nm | Single |
| -03 | 4 | 125 | 5 | 1,550 nm | Single |
| -04 | 2 | 125 | 6 | 850/1,300 nm | Multi |
| -05 | 2 | 125 | 6 | 1,310 nm | Single |
| -06 | 2 | 125 | 6 | 1,550 nm | Single |

PIN shall be applied to outer housing flange.

Identify channels on both ends of the inserts (see figure 3 and figure 5).

Yellow indicator band: Shall be applied to the exposed outside diameter of the connector outer housing in the area between the front edge and the jam nut threads.

Yellow indicator band color: Yellow indicator band color shall be in accordance with EIA-359.

“Fiber-Optics” phrase: Shall be applied to the outer housing flange, side opposite from the PIN.

Downloaded from http://www.everyspec.com



Channel location identification: Same as terminus location identification requirement, except location marking shall be adjacent to lens (see figure 3 and figure 5).

Lens cleaning: Each lens shall be cleaned in accordance with instructions supplied by the connector manufacturer. The lens shall not be removed from its operational position within the connector to facilitate cleaning. After cleaning, the identification marking requirements shall be met; also the requirements of insertion loss shall be met before and after the test.

Insert retention axial strength: Applicable with the exception that the force shall be applied to front (lens) side of insert only. The requirements of insertion loss shall be met after the test only.

Insert retention radial strength: Applicable with the exception that the torque of 3.4 N m (30 inch pounds) shall be applied between the shell body and the insert utilizing the guide pin and guide pin hole of the insert. The requirements of insertion loss shall be met after the test only.

Terminus retention force: Not applicable.

Terminus insertion and removal forces: Not applicable.

Maintenance aging: Not applicable.

Coupling force: 1 kg (2.2 pounds) maximum.

Coupling torque: 5 N-m (44.3 inch-pounds) maximum.

Temperature requirements: (Unless stated otherwise, tests are to be performed under worst case scenario (85º C). Temperature information below is for user):

| | | |
|---|---|---|
| Operating temperature range: | -46°C to 71°C | (-51°F to 160°F). |
| Transit temperature range: | -54°C to 71°C | (-65°F to 160°F). |
| Storage temperature range: | -57°C to 85°C | (-70°F to 185°F). |

Temperature life: Applicable except the optical requirements apply before and after the test only.

Mating durability: Applicable except after 1,000 cycles, the connector shall show no defects detrimental to the operation of the connector and shall pass mating forces and coupling torques tests. After an additional 2,000 cycles, the connector shall pass the insertion loss test. Insertion loss shall be measured every 100 mating cycles during the test.

Impact: Not applicable.

Twist: Not applicable.

Cable seal flexing: Not applicable.

Cable retention: Not applicable.

Crush resistance: Not applicable.

Downloaded from http://www.everyspec.com



External bending moment: Applicable, that the applied load shall be 30 N-m (22 lbf ft) and the application rate shall be 21 N (4.7 lbf) per second. The insertion loss of each optical path shall be measured before, during, and after the test.

Thermal shock: Applicable, except test in accordance with TIA-455-71, schedule C for 10 cycles, with high and low test temperatures of +85°C and -57°C, respectively. Insertion loss shall be measured before and after test.

Physical shock: Applicable, except test condition A shall be utilized.

Salt spray: Applicable in accordance with TIA-455-16 test condition C. Connector shall be mounted in the outer wall of a sealed enclosure to prevent water exposure to the rear of the connector.

Fungus resistance: Applicable in accordance with basic document (MIL-DTL-83526). Following the test, examination of the test samples shall reveal no evidence of deterioration of component parts or constituent materials that will adversely affect performance.

Humidity: Applicable, except the connector receptacle shall be mounted in the outer wall of a sealed enclosure to prevent moisture exposure to the rear of the connector receptacle. MIL-PRF-49291 optical fibers may be used instead of MIL-PRF-85045 cables.

Fluid Immersion: Applicable, except the receptacle shall be mounted in the outer wall of a sealed enclosure to prevent fluid exposure to the rear of the receptacle.

Freezing water immersion: Applicable, except the connector shall be mounted in the outer wall of a sealed enclosure to prevent water exposure to the rear of the connector.

Water pressure: In accordance with TIA-455-74 at a depth of 15 m (590.5 inches) for a duration of 24 hours. Receptacle shall be mounted in the outer wall of a sealed enclosure to prevent water exposure to the rear of the receptacle. Receptacle shall be tested mated to a plug cable connector and also with the protective cap. There shall be no evidence of water penetration into the separable interface area of the receptacle or through the receptacle to the interior of the enclosure.

Sand and dust: Applicable, except the connector shall be mounted in the outer wall of a sealed enclosure to prevent sand and dust exposure to the rear of the connector.

Flammability: Flammability is not applicable.

Mud test: Applicable, except the connector shall be mounted in the outer wall of a sealed enclosure to prevent mud exposure to the rear of the connector.

Sample size: Eight jam-nut low-profile bulkhead-mount connectors with sufficient mating connectors to test.

Assembly instructions: Assembly instructions shall include:

a. Cable preparation-stripping dimensions and tolerances.

b. Military PIN and manufacturer's part number.

c. Lens cleaning procedures.

Downloaded from http://www.everyspec.com



d. List and description of crimping or special tools required.

e. Sufficient pertinent dimensions for verification of correct parts; as minimum the entry openings shall be specified.

f. Any polishing requirements and fiber preparation requirements.

Conformance and periodic inspection:

Conformance inspection sample unit preparation: Applicable, except in cases where no MIL-PRF-85045 qualified sources exist, cable shall be specified by the qualifying activity (mailto:vqp.chief@dla.mil).

QUALIFICATION INSPECTION

Qualification inspection sample size: Applicable, except the following minimum test samples shall be provided for each connector series:

Eight jam-nut low-profile bulkhead-mount connectors with appropriate mating connectors to facilitate testing.

Lens scratch resistance: Lenses shall have a surface quality of 60 -40 and shall pass the scratch and dig requirement of MIL-PRF-13830.

Intermateability and interoperability tests apply, with the following additional requirements:

Units shall mate and perform with standards maintained by the qualifying activity.

The intermateability and interoperability sample shall be configured per figure 8.

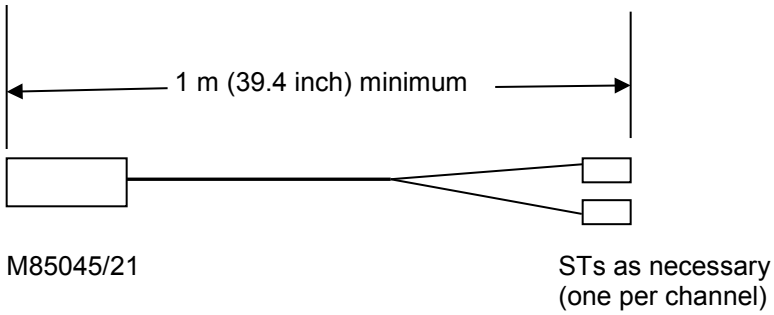


FIGURE 8. Intermateability and interoperability sample

Nuclear, biological, and chemical decontamination: Nuclear, biological, and chemical decontamination requirement shall be demonstrated through the following:

a. As a guide for design and material considerations, chapter 5 of MIL-HDBK-783 may be used.

Downloaded from http://www.everyspec.com



b. To verify wash down capability, with a connector and cable assembly (M83526/20) connected to a receptacle mounted on a panel, there shall be no leak when washed down utilizing a wide angle nozzle no closer than three (3) feet at 45 psi (for additional information see MIL-STD-108 table II spray tight). Upon uncoupling the connector and receptacle, there shall be no evidence of moisture inside the seal area.

Electromagnetic shielding: Electromagnetic shielding testing of plugs mated to receptacles and protective caps mated to receptacles shall be conducted as follows. The test specimens (including terminated cable) shall be tested to determine the propagation characteristics (attenuation or conduction) of the specimen assembly. The shielding effectiveness of a shielded enclosure shall be verified in accordance with the procedures specified in IEEE-299 at the discrete frequencies specified in table VI with the test specimen mounted in position. The qualified receptacle shall be mounted into the wall (panel) of the shielded enclosure such that the plug mates from the inside of the shielded enclosure. The cable(s) from the plug and receptacle shall be extended parallel to the test specimen for a minimum of 2 meters on each side of the enclosure wall (panel). For receptacle and protective cap testing the cable(s) from the receptacle shall be extended parallel to the test speicmen for a minimum of 2 meters into the enclosure wall (panel).The dynamic range of the test setup shall be measured as specified in IEEE-299 at each discrete frequency specified in table VI. The measured level of radio frequency (RF) propagation through the test specimen installed in the shielded enclosure shall be determined in accordance with the procedures specified in IEEE-299 at each discrete frequency specified in table VI.

TABLE VI. Electromagnetic shielding test frequencies.

| Field propagation | Test frequencies |
|---|---|
| H field | 150 kHz<br>14 MHz |
| Plane wave | 400 MHz<br>1 GHz |
| Microwave | 10 GHz |

Antenna placement. Antenna types and placement distances shall conform to table VII and table VIII respectively. Matched antennas shall be used for each measurement. Placement distances are specified in IEEE-299 for both antennas to test specimen connectors and the wall (panel) of the shielded enclosure. The transmitting antenna shall be oriented in both the parallel (horizontal) and perpendicular (vertical) directions for each frequency listed in table VI. Energy from the transmitting antenna shall be maximized by positioning the antenna parallel along the test specimen cable length and perpendicular along the test specimen cable circumference. The sensitivity of the receiving antenna shall be maximized by measuring both end view and side (length) view with a constant rotation between the horizontal and vertical antenna positions. For plane wave measurements in the perpendicular direction, the transmit antenna shall be 1 meter above the test specimen cable.

Downloaded from http://www.everyspec.com



TABLE VII. Antenna types.

| Field propagation | Antenna type |
|---|---|
| H field | Horn |
| Plane wave | Log periodic or dipole |
| Microwave | Horn |

TABLE VIII. Antenna placement distances. 1/

| Location | Placement |
|---|---|
| Receiving antenna to test specimen cable | 5 cm |
| Transmitting antenna to test specimen cable | 1 m |
| Transmitting antenna to shielded enclosure | 2 m |

1/ Extended dipole antenna distance measurements shall be made from the center of the antenna elements.

When tested, the propagated radio frequency (RF) attenuation of the connector shall be not less than 60 dB for frequencies not greater than 10 GHz.

QUALIFICATION BY SIMILARITY

Qualified SM, 4 channel, 1310 nm wavelength connector:

Manufacturers who are qualified under this specification sheet for single mode four channel connectors at 1310 nm wavelength and pass the tests/inspections specified in table IX are qualified by similarity for the configurations specified in table IX.

Downloaded from http://www.everyspec.com



TABLE IX. Qualification by similarity, SM 4 channel to other configurations 1/.

| Channels | 4 | 2 | 2 | 4 | 2 |
|---|---|---|---|---|---|
| Wavelength | 1550 | 1310 | 1550 | 850/1300 | 850/1300 |
| Mode | Single | Single | Single | Multi | Multi |
| Inspections/tests 2/ | | | | | |
| Group I<br>(all sample units)<br>(all tests shall be performed)<br>Return loss 3/ | <br><br>X<br>X | <br><br>X<br>X | <br><br>X<br>X | <br><br>X | <br><br>X |
| Group III<br>(2 sample units)<br>Thermal shock<br>Physical shock<br>Vibration | <br><br>X<br>X<br>X | | | <br><br>X<br>X<br>X | <br><br>X 4/<br>X 4/<br>X 4/ |
| Group IV<br>(2 samples)<br>Humidity | <br><br>X | | | <br><br>X | <br><br>X 4/ |
| Group V 2/<br>(2 sample units)<br>Intermateability and interoperability | <br><br>X | <br><br>X | <br><br>X | <br><br>X | <br><br>X |

1/ Single mode, 4 channel, 1310 nm wavelength connector already qualified.
2/ X indicates the test applies.
3/ Return loss test to be performed on all sample units as part of group I.
4/ Test may be omitted if multimode 4 channel product is already qualified.

Qualified multimode connector and candidate single mode connector:

Manufacturers who are qualified under this specification sheet for multimode connector (4 channel and 2 channel) and pass the tests/inspections specified in table X are qualified by similarity for single mode connectors (4 channel and 2 channel).

TABLE X. Qualification by similarity, (qualified multimode and candidate single mode).

| |
|---|
| Group I (all tests) |
| Discontinuities |
| Temperature life |
| Insertion loss |
| Return loss |
| Crosstalk |
| Vibration |
| Humidity |
| Physical shock |
| External bending moment |
| Thermal shock |
| Mating durability |

Qualified 2 channel connector does not qualify a 4 channel connector.

Downloaded from http://www.everyspec.com



TABLE XI. Group A inspection.

| Inspection | Requirement paragraph | Test paragraph |
|---|---|---|
| Workmanship | MIL-DTL-83526 (see 3.13) | MIL-DTL-83526 (see 4.9.32) |
| Identification marking | MIL-DTL-83526 (see 3.11.4) and MIL-DTL-83526/21 | MIL-DTL-83526 (see 4.9.4) and MIL-DTL-83526/21 |
| Critical examinations | MIL-DTL-83526/21 | MIL-DTL-83526/21 |

Critical examinations (Group A inspection). Critical examinations shall be performed on 100 percent of the product produced for delivery, and shall consist of the following tests:

- Conformance inspection insertion loss. When measured in accordance with TIA/EIA-455-171 method D1 (singlemode) or TIA/EIA-455-171 method D3 (multimode), the maximum per channel insertion loss shall be 1.5dB for singlemode and 1.3dB for multimode.
- Return loss (single mode only)
- Mating thread BX.

TABLE XII. Group B inspection.

| Inspection | Requirement paragraph | Test paragraph |
|---|---|---|
| Coupling force | MIL-DTL-83526/21 | MIL-DTL-83526/21 |
| Coupling torque | MIL-DTL-83526/21 | MIL-DTL-83526/21 |
| Insert retention axial strength | MIL-DTL-83526/21 | MIL-DTL-83526/21 |
| Insert retention radial strength | MIL-DTL-83526/21 | MIL-DTL-83526/21 |

TABLE XIII. Group C inspection.

| Inspection | Requirement paragraph | Test paragraph |
|---|---|---|
| Group I (4 mated pair)<br>Insertion loss | MIL-STD-83526/21 | MIL-STD-83526/21 |
| Group II (2 mated pair)<br>External bending moment<br>Thermal shock<br>Water<br>Pressure/Freezing<br>Physical shock<br>Vibration | MIL-DTL-83526/21<br>MIL-DTL-83526/21<br>MIL-DTL-83526 (see 3.11.28) and MIL-DTL-83526/21<br>MIL-DTL-83526/21<br>MIL-DTL-83526 (see 3.11.23) | MIL-DTL-83526/21<br>MIL-DTL-83526/21<br>MIL-DTL-83526 (see 4.9.28) and MIL-DTL-83526/21<br>MIL-DTL-83526/21<br>MIL-DTL-83526 (see 4.9.23) |
| Group III (2 mated pair)<br>Mating durability<br>Humidity<br>Salt spray<br>Sand and dust | MIL-DTL-83526/21<br>MIL-DTL-83526 (see 3.11.24)<br>MIL-DTL-83526/21<br>MIL-DTL-83526 (see 3.11.29) | MIL-DTL-83526/21<br>MIL-DTL-83526 (see 4.9.24)<br>MIL-DTL-83526/21<br>MIL-DTL-83526 (see 4.9.29) |

Downloaded from http://www.everyspec.com



NOTES:

Referenced documents. In addition to MIL-DTL-83526, this specification sheet references the following documents

| | | |
|---|---|---|
| MIL-A-8625 | MIL-STD-889 | TIA-455-32 |
| MIL-HDBK-783 | ASTM B840 | TIA-455-42 |
| MIL-PRF-13830 | ASTM B733 | TIA-455-71 |
| MIL-PRF-49291 | IEEE 299 | TIA-455-74 |
| MIL-PRF-85045 | ISO 2903 | ASTM B841 |
| MIL-STD-108 | TIA-455-16 | EIA-359 |

Changes from previous issue. The margins of this standard are marked with vertical lines to indicate where changes from the previous issue were made. This was done as a convenience only and the Government assumes no liability whatsoever for any inaccuracies in these notations. Bidders and contractors are cautioned to evaluate the requirements of this document based on the entire content irrespective of the marginal notations and relationship to the last previous issue.

Custodians:
Army - CR
Navy - AS
Air Force - 85
DLA - CC

Review activities:
Air Force - 13, 19, 93, 99
NASA - NA

Preparing activity:
DLA – CC

(Project 6060-2014-050)

NOTE: The activities listed above were interested in this document as of the date of this document. Since organizations and responsibilities can change, you should verify the currency of the information above using the ASSIST Online database at https://assist.dla.mil/.