Downloaded from http://www.everyspec.com

INCH POUND
MIL-DTL-83413/6C
24 September 2008
SUPERSEDING
MIL-DTL-83413/6B
24 November 2003

DETAIL SPECIFICATION SHEET

CONNECTORS AND ASSEMBLIES, ELECTRICAL, AIRCRAFT GROUNDING: RECEPTACLES, TWO PIECE, WITH INSERTS AND HOUSINGS

This specification is approved for used by all Departments and Agencies of the Department of Defense.

The requirements for acquiring the product described herein shall consist of this specification sheet and MIL-DTL-83413.

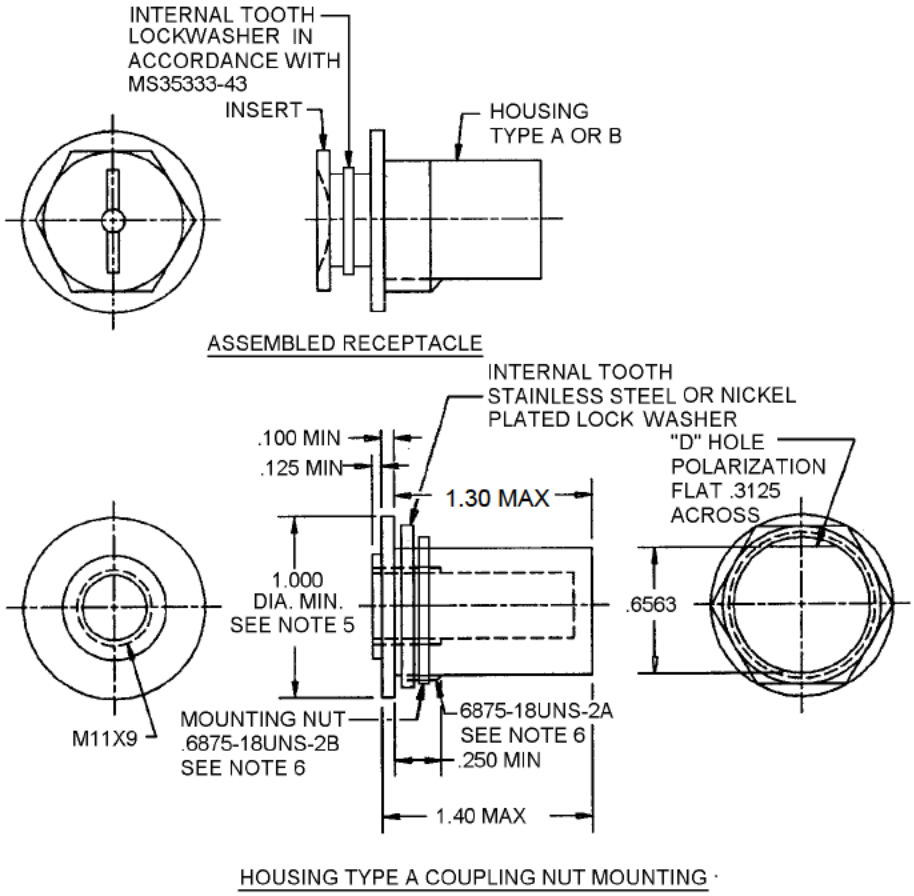

FIGURE 1. Grounding receptacle.

Downloaded from http://www.everyspec.com

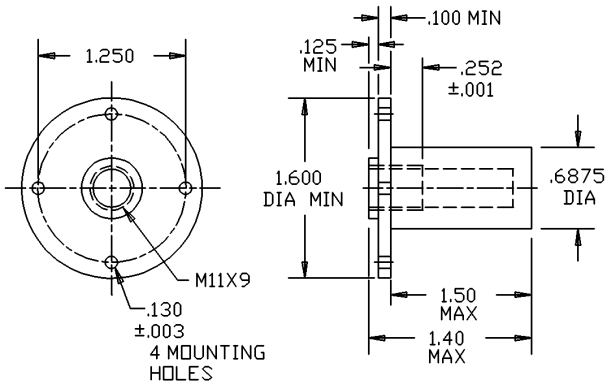

HOUSING TYPE B COUPLING NUT

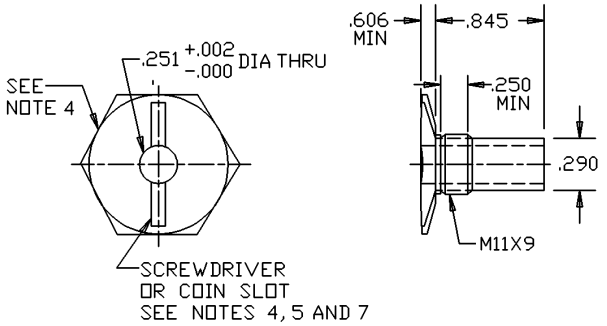

INSERT DETENT

Inches	mm	Inches	mm
.002	0.05	.290	7.37
.003	0.08	.3125	7.94
.060	1.52	.6563	16.67
.100	2.54	.6875	17.46
.125	3.18	.845	21.46
.130	3.30	1.250	31.75
.250	6.35	1.40	35.56
.251	6.37	1.50	38.10
.252	6.40	1.600	40.64

NOTES:

1. Dimensions are in inches.
2. Metric equivalents are given for information only.
3. Unless otherwise specified, tolerance is ±.005 (0.13 mm) for three place decimals and ±.0010 (0.025 mm) for four places decimals.
4. When hex flanges are used on inserts, the hex shall be .750 (19.05 mm) for opposite flats and .438 inch (11.13 mm) across the flats. Circularly flanged inserts shall be turnable by a standard screwdriver. Hex flanged inserts shall be turnable by means of a coin.
5. Housing flanges need not be circular, however, the surface area of the flange shall be at least of the minimum size shown.
6. M16 X 1.0 metric threads may be used as an option. .6875-24 UNEF-28 threads may be used as an option; mounting nut then shall be MS3186-36.
7. Changes in the bore dimensions will result in international interoperability problems.
8. Coins slot width .073 inch (1.85 mm) minimum.
9. .068 inch (1.73 mm) is minimum depth measure to theoretical intersection of the arc with the horizontal centerline.
10. Housing may be welded or brazed.
11. Insert/housing threads (unless otherwise specified) are metric.

FIGURE 1. Grounding receptacle - Continued.

Downloaded from http://www.everyspec.com

REQUIREMENTS:

Material:

Inserts: Brass in accordance with ASTM-B36/ B36M and ASTM-B121/B121M.

Insert detents: Beryllium copper in accordance with ASTM-B196/ B196M, ASTM-B197/ B197M and ASTM-B194.

Housing: Stainless steel in accordance with SAE-AMS-S-7720, 300 series composition, condition A, passivated in accordance with ASTM-A967 or SAE-AMS-QQ-P-35.

Dentent action: Shall be provided for the mating plug.

Finish: Cadmium plate in accordance with SAE-AMS-QQ-P-416, type II, class 2, or aluminum coating, or zinc in accordance with ASTM-B633.

Contact resistance: Shall not exceed 5.0 milliohms.

Durability: 3,000 cycles.

Mounting nut: Shall be supplied with housing type A.

Fluid immersion: Not applicable to housing type B.

Mating plug: In accordance with MIL-DTL-83413/4.

Part or Identifying Number (PIN):

M83413 /6- 1 A F

Basic specification
Specification sheet

Inserts

0 - none
1 - hex flange
2 - circular flange

Housing
0 - none
A - coupling nut mounting
B - rivet mounting

Finish
C – Cadmium
Z – Zinc
A - Aluminum

Downloaded from http://www.everyspec.com

QUALIFICATION:

Qualification is not required for this specification sheet. First article inspection shall be a visual and mechanical inspection in accordance with MIL-DTL-83413.

Certain provisions of this specification are the subject of International Standardization Agreements AIR STD 25/26 and NATO STANAG 3632. When revision or cancellation of this specification is proposed which will affect or violate the international agreements concerned, the preparing activity will take appropriate reconciliation action through international standardization channels, including departmental standardization offices, if required.

Changes from previous issue. The margins of this specification are marked with vertical lines to indicate where changes from the previous issue were made. This was done as a convenience only and the Government assumes no liability whatsoever for any inaccuracies in these notations. Bidders and contractors are cautioned to evaluate the requirements of this document based on the entire content irrespective of the marginal notations and relationship to the last previous issue.

Referenced documents. In addition to MIL-DTL-83413, this document references the following:

ASTM-A967	SAE-AMS-S-7720
ASTM-B36/B36M	SAE-AMS-QQ-P-35
ASTM-B121/B121M	SAE-AMS-QQ-P-416
ASTM-B194	AIR STD 25/26
ASTM-B196/B196M	NATO STANAG 3632
ASTM-B197/B197M	MIL-DTL-83413/4
ASTM-B633	

CONCLUDING MATERIAL

Custodians:
Army - AV
Navy - AS
Air Force - 85
DLA - CC

Review activities:
Army - AR, CR, CR4, MI
Navy - MC
Air Force - 02, 13, 99

Preparing activity:
DLA - CC

(Project 5935-2008-003)

NOTE: The activities listed above were interested in this document as of the date of this document. Since organizations and responsibilities can change, you should verify the currency of the information above using the ASSIST Online database at http://assist.daps.dla.mil.