Downloaded from http://www.everyspec.com

.

INCH - POUND

MIL-DTL-83413C
15 August 2012
SUPERSEDING
MIL-DTL-83413B
22 September 2005

DETAIL SPECIFICATION

CONNECTORS AND ASSEMBLIES, ELECTRICAL, AIRCRAFT GROUNDING, GENERAL SPECIFICATION FOR

This specification is approved for use by all Departments and Agencies of the Department of Defense.

1. SCOPE

1.1 Scope. This specification covers electrical aircraft grounding connectors and grounding assemblies, including plugs, receptacles, grounding clamp, connectors, jumper cable assemblies, and other accessories.

1.2 Classification.

1.2.1 Grounding assemblies. Grounding assemblies are classified as follows:

Type I	-	Plug and clamp connectors, both attached to specified cable.
Type II	-	Plug attached to specified cable.
Type III	-	Clamp connector attached to specified cable.
Type IV	-	Jumper assembly, lug to lug.

1.2.2 Other components. Other components are to be classified by name only.

2. APPLICABLE DOCUMENTS

2.1 General. The documents listed in this section are specified in sections 3, 4, or 5 of this specification. This section does not include documents cited in other sections of this specification or recommended for addition information or as examples. While every effort has been made to ensure the completeness of this list, document users are cautioned that they must meet all specified requirements documents cited in sections 3, 4, or 5 of this specification, whether or not they are listed.

Comments, suggestions, or questions on this document should be addressed to DLA Land and Maritime, Attn: VAI, PO Box 3990, Columbus, OH 43218-3990 or emailed to RFConnectors@dla.mil. Since contact information can change, you may want to verify the currency of this address information using the ASSIST Online database at https://assist.dla.mil/.

Downloaded from http://www.everyspec.com

2.2 Government documents.

2.2.1 Specifications, standards, and handbooks. The following specifications, standards, and handbooks form a part of this document to the extent specified herein. Unless otherwise specified, the issues of these documents are those cited in the solicitation or contract.

FEDERAL SPECIFICATIONS

FF-S-200	- Setscrews: Hexagon socket and Spline Socket, Headless.
MIL-DTL-83420	- Wire Rope, Flexible, for Aircraft Control.

FEDERAL STANDARD

FED-STD-H28	- Screw Thread Standards for Federal Services.

DEPARTMENT OF DEFENSE STANDARDS

MIL-STD-202	- Test Methods for Electronic and Electrical Component Parts.
MIL-STD-889	- Dissimilar Metals.
MIL-STD-1285	- Marking of Electrical and Electronic Parts.

(See supplement 1 for list of specification sheets.)

(Copies of these documents are available online at https://assist.dla.mil/ or from the Standardization Document Order Desk, 700 Robbins Avenue, Building 4D, Philadelphia, PA 19111-5094.)

2.2.2 Other Government documents, drawings, and publications. The following other Government documents, drawings, and publications form a part of this specification to the extent specified herein. Unless otherwise specified, the issues of these documents are cited in the solicitation or contract.

NORTH ATLANTIC TREATY ORGANIZATION (NATO)

STANAG 3632	- Electrical Safety Connections for Aircraft and Ground Support Equipment.

(Copies of these documents are available online at https://assist.dla.mil/ or from the Standardization Document Order Desk, 700 Robbins Avenue, Building 4D, Philadelphia, PA 19111-5094.)

2.3 Non-Government publications. The following documents form a part of this document to the extent specified herein. Unless otherwise specified, the issues of these documents are cited in the solicitation or contract.

AEROSPACE INDUSTRIES ASSOCIATION (AIA)

AIA/NAS NASM20615	- Rivet, Solid-Universal Head, Brass, Copper, Nickel-Copper Alloy.
AIA/NAS NASM51021	- Setscrew, Hexagon Socket, Cup Point, Corrosion-Resisting Steel, Passivated, UNC-3a, Plain And Self-locking.
AIA/NAS NASM171466	- Pin-spring, Corrosion Resistant Steel.

(Copies of these documents are available online at http://www.aia-aerospace.org/ or from the Aerospace Industries Association, 1000 Wilson Boulevard, Suite 1700, Arlington, VA 22209-3901.)

Downloaded from http://www.everyspec.com

AMERICAN NATIONAL STANDARDS INSTITUTE (ANSI)

ANSI B46.1	-	Surface Texture.

(Copies of these documents are available online at http://www.ansi.org or from the ANSI Customer Service Dept. , 25 West 43 Street, 4th Floor, New York, NY 10036.)

ASTM INTERNATIONAL

ASTM A228/A228B	-	Standard Specification for Steel Wire, Music Spring Quality.
ASTM A304	-	Alloy Steel Bar to End Quench Hardenability Requirements.
ASTM B633	-	Electrodeposited Coatings of Zinc on Iron and Steel.
ASTM B733	-	Standard Specification for Autocatalytic (Electroless) Nickel-Phosphorus Coatings on Metal.

(Copies of these documents are available online at http://www.astm.org or from the ASTM International, P.O. Box C700, 100 Barr Harbor Drive, West Conshohocken, PA 19428-2959.)

ELECTRONIC INDUSTRIES ALLIANCE (EIA)

EIA-364	-	Electrical Connector/Socket Test Procedures Including Environment Classifications –Revision of EIA-364-c.

(Copies of these documents are available online at http://www.eia.org or from the Electronic Industries Alliance, Technology Strategy & Standards Department, 2500 Wilson Boulevard, Arlington, VA 22201.)

INTERNATIONAL ORGANIZATION FOR STANDARDIZATION (ISO)

ISO 46	-	Aircraft-Fuel Nozzle Grounding Plugs and Sockets.

(Copies of these documents are available online at http://www.ansi.org or from the ANSI Customer Service Dept. , 25 West 43 Street, 4th Floor, New York, NY 10036.)

SAE INTERNATIONAL

SAE-AMS5032	-	Wire, Steel, 0.18-0.23C.
SAE-AS7928	-	Terminals, Lug: Splices, Conductor: Crimp Style, Copper, General Specification For.
SAE-AMS6274	-	Steel Bars, Forgings and Tubing 0.50CR-0.55NI-0.20MD.

(Copies of these documents are available online at http://www.sae.org or from the Society of Automotive Engineers, 400 Commonwealth Drive, Warrendale, PA 15096-0001.)

2.4 Order of precedence. Unless otherwise noted herein or in the contract, in the event of a conflict between the text of this document and the references cited herein (except for related specification sheets), the text of this document takes precedence. Nothing in this document, however, supersedes applicable laws and regulations unless a specific exemption has been obtained.

Downloaded from http://www.everyspec.com

3. REQUIREMENTS

3.1 Specification sheets. The individual item requirements shall be as specified herein and in accordance with the applicable specification sheets. In the event of any conflict between requirements of this specification and the specification sheet, the latter shall govern.

3.2 Qualification. Connectors furnished under this specification shall be products that are authorized by the qualifying activity for listing on the applicable qualified products list before contract award (see 4.5 and 6.3).

3.3 Material. Unless otherwise specified, material shall be as specified herein and on the individual specification sheets (see 3.1). When a specific material is not designated, a material shall be used that permits the connector to meet the requirements of this specification. All materials used shall be suitable for connector usage within a temperature range of -55° C (-67° F) through +85° C (+185° F) (see 4.3).

3.3.1 Corrosion resistance. All materials used in the fabrication of the connectors shall be corrosion resistant and where necessary they shall be stress-corrosion resistant or treated so as to be corrosion or stress-corrosion resistant.

3.3.2 Dissimilar metals. Dissimilar metals shall be used in accordance with MIL-STD-889.

3.4 Design and construction. The connectors shall be designed and constructed for rough handling and service under all weather conditions as may be encountered on a concrete flight line, the design requirements shall be as specified herein and on the individual specification sheets.

3.4.1 Grounding clamp connector. The configuration of the grounding clamp connector shall be as specified herein and on the individual specification sheets. The internal construction and internal contour are optional.

3.4.1.1 Clamping range. The grounding clamp connector shall clamp onto any rod ranging from .375 inch (9.53 mm) to .750 inch (19.05 mm) nominal diameter.

3.4.1.2 Cable connection. Each connector handle shall have provisions for attaching the grounding cable. The connection shall be of such strength that it meets the requirements specified herein.

3.4.1.2.1 Setscrews. When required, hexagon socket type setscrews conforming to FF-S-200 or NASM51021, or equal, shall be provided.

3.4.1.3 Spring. The spring shall be made of music wire in accordance with ASTM A228, or equal. Diameter and heat treatment shall meet requirements. The spring shall be stress relieved, zinc plated in accordance with ASTM B633, or Nickel plated in accordance with ASTM B733. Optional material and treatment may be used provided they meet all the requirements herein.

3.4.1.4 Jaw inserts. Jaw inserts shall be 4130 steel conforming to ASTM A304 condition optional, carburized and case hardened 0.010 inch (.25 mm) minimum depth. Optional SAE-AMS 5032 or SAE-AMS6274 steel may be used. Steel shall be zinc plated in accordance with ASTM B633. retaining pins shall conform to NASM171466 or equal, if used.

3.4.1.5 Rivets. Rivets shall be in accordance with NASM20615-6M, section 2 or equal. Brass rivets shall be zinc plated in accordance with ASTM B633.

Downloaded from http://www.everyspec.com

3.4.2 Grounding plug. The configuration of the grounding plug shall be as specified herein and on the individual specification sheets. Material shall be as specified on the individual specification sheets.

3.4.2.1 Threads. Threads shall be in accordance with FED-STD-H28.

3.4.2.2 Surface texture. Surface texture of the grounding plug shall be in accordance with ANSI B46.1.

3.4.2.3 Grips. The incorporation of grips on grounding plugs shall be considered optional. When grips are used, they shall not interfere with the insertion or general operation of the grounding plug.

3.4.2.4 Caps. Caps shall be included with the grounding plugs on applicable specification sheets.

3.4.3 Connecting cables and jumper cable assemblies. The construction of connecting cables and jumper cable assemblies shall be as specified herein and on the individual specification sheets. Connecting cables shall be tested only when inserted into a grounding assembly. Jumper cable assemblies shall be tested as a separate part.

3.4.3.1 Wire. Grounding wire shall be as specified on the individual specification sheets.

3.4.3.2 Terminal lugs. Unless otherwise specified, copper terminal lugs shall be in accordance with SAE-AS7928 (see 3.1).

3.4.3.3 Tools. Tools used for construction of cable assemblies shall be as specified on the individual specification sheets.

3.4.4 Grounding receptacles. Grounding receptacles shall either be a one-piece or a two-piece unit. Two-piece receptacles shall be composed of a grounding insert and a receptacle housing. All grounding receptacles shall be as specified herein and on the individual specification sheets.

When tested, the grounding receptacle shall be fully assembled. All receptacles shall be capable of mating with all plugs under this specification, and the plugs specified by, ISO 46, and NATO STANAG 3632.

3.4.4.1 Grounding inserts. All grounding inserts shall be capable of mating with the receptacle housing of 3.4.4.2. In addition, all inserts shall have external threads per FED-STD-H28 which are compatible with the internal threads of the receptacle housing.

3.4.4.2 Receptacle housing. All receptacle housings shall be capable of mating with the grounding inserts of 3.4.4.1. The receptacle housing shall have internal threads per FED-STD-H28 which are compatible with the external threads of the grounding inserts. Unless otherwise specified, O-rings shall be supplied with each housing (see 3.1).

3.4.4.2.1 Jam-nut mounting. Unless otherwise specified, jam-nut mounting shall be provided on the mounting threads of the housing, such that the drain-holes are vertically oriented, if provided.

3.5 Performance. The connectors shall meet the performance requirements specified herein.

3.5.1 Detent action. When tested as specified in 4.7.2, pre-durability test, insertion force shall not exceed 28lbs and withdrawal force shall not be less than 6lbs. Detent action shall be present and shall have sufficient force to suspend a 6lb dead weight attached to the plug, and provide contact resistance not exceeding the value specified, when tested as specified in 4.7.7.1. Post durability test, insertion force

Downloaded from http://www.everyspec.com

shall not exceed 18lbs and withdrawal force shall not be less than 2lbs, and provide contact resistance not exceeding the value specified, when tested as specified in 4.7.7.1.

3.5.2 Hand-grip force. When tested as specified in 4.7.3, the hand-grip force required to open the grounding clamp connector shall not exceed 70 pounds (311.4 newtons).

3.5.3 Side loading. When tested as specified in 4.7.4, the connector shall withstand a force of 20 pounds (88.9 newtons) in any direction perpendicular to the axis of insertion, without distortion or other visible damage.

3.5.4 Torque. When tested as specified in 4.7.5, there shall be no stripping of the coupling threads.

3.5.5 Engagement (plugs and receptacles). When tested as specified in 4.7.6, there shall be no free rotation about or free movement along the connector insertion axis by the grounding plug or test plug.

3.5.6 Resistance. Resistance values shall be specified on the individual specification sheets (see 4.7.7).

3.5.6.1 Contact resistance. When tested as specified in 4.7.7.1, the resistance of the mated connectors shall not exceed the value specified.

3.5.6.2 Clamp connector resistance. When tested as specified in 4.7.7.2, the clamp connector resistance shall not exceed the value specified.

3.5.6.3 Assembly resistance. When tested as specified in 4.7.7.3, the resistance of the assembly shall not exceed the value specified.

3.5.7 Cable attachment. When tested as specified in 4.7.8, the cable shall remain attached to the clamp connector for 5 seconds under 50 pounds (222.4 newtons) of axial cable force without breaking, becoming loose, or distorting the connector such that it will not meet the requirements specified herein.

3.5.8 Clamp release force. When tested as specified in 4.7.9, the force required to release the grounding clamp connector from the rod shall meet the requirements specified herein.

3.5.8.1 Clamp release force initial. The grounding clamp connector shall meet the initial clamp release force requirements in table I (see 4.7.9).

3.5.8.2 Post clamping life test. When tested as specified in 4.7.10, the grounding clamp connector shall meet the post clamping life test requirements in table I.

TABLE I. Clamp release force.

Rod diameter (nominal) inches (mm)	Clamp release force Initial, pounds-minimum (newtons)	Clamp release force post camping life test, pounds-minimum (newtons)
.375 (9.53)	20 (88.9)	17.0 (75.6)
.500 (12.70)	30 (133.5)	25.5 (113.4)
.625 (15.88)	40 (177.9)	34.0 (151.2)
.750 (19.05)	50 (222.4)	42.5 (189.0)

3.5.9 Clamping life. When tested as specified in 4.7.10, the clamp connector shall meet the clamp release force requirements of 3.5.8 and the clamp connector resistance requirements of 4.7.10.

Downloaded from http://www.everyspec.com

3.5.10 Vibration. When tested as specified in 4.7.11, there shall be no physical or mechanical damage to the connector, other than normal surface wear. The connector shall meet the contact resistance requirements of 3.5.6.1 and the detent action requirements of 3.5.1.

3.5.11 Durability. When tested as specified in 4.7.12, there shall be no evidence of mechanical damage other than normal surface wear. The connector shall then meet the detent action requirements of 3.5.1, and the contact resistance requirements of 3.5.6.1.

3.5.12 Tensile strength. When tested as specified in 4.7.13, the jumper cable assembly shall withstand an axial force specified in the applicable specification sheets (see 3.1). It shall then meet the assembly resistance requirements of 3.5.6.3.

3.5.13 Flexibility. When tested as specified in 4.7.14, the jumper cable assembly shall meet the tensile strength requirement of 3.5.12 without breaking or stranding, and shall meet the assembly resistance requirements of 3.5.6.3.

3.5.14 Crush. When tested as specified in 4.7.15, there shall be no evidence of mechanical damage, the plugs shall meet the detent action requirements of 3.5.1, and the contact resistance requirements of 3.5.6.1.

3.5.15 Humidity. When tested as specified in 4.7.16, there shall be no evidence of corrosion, and the following requirements shall be met, as applicable:

a. Clamp release force (see 3.5.8.1).
b. Contact resistance (see 3.5.6.1).
c. Clamp connector resistance (see 3.5.6.2).
d. Assembly resistance (see 3.5.6.3).
e. Detent action (see 3.5.1).

3.5.16 Temperature cycling. When tested as specified in 4.7.17, there shall be no evidence of physical damage, and the following requirements shall be met, as applicable:

a. Clamp release force (see 3.5.8).
b. Contact resistance (see 3.5.6.1).
c. Clamp connector resistance (see 3.5.6.2).
d. Assembly resistance (see 3.5.6.3).
e. Detent action (see 3.5.1).

3.5.17 Drop. When tested as specified in 4.7.18, the clamp connector shall function properly, and the following requirements shall be met:

a. Clamp release force (see 3.5.8.1).
b. Clamp connector resistance (see 3.5.6.2).

3.5.18 Altitude-low temperature. When tested as specified in 4.7.19, there shall be no evidence of physical damage, and the receptacles shall meet the detent action requirements of 3.5.1, the contact resistance requirements of 3.5.6.1, and the assembly resistance requirements of 3.5.6.3, as applicable.

Downloaded from http://www.everyspec.com

3.5.19 Dust. When tested as specified in 4.7.20, the following requirements shall be met, as applicable:

a. Detent action (see 3.5.1).
b. Contact resistance (see 3.5.6.1).
c. Clamp connector resistance (see 3.5.6.2).
d. Assembly resistance (see 3.5.6.3).

3.5.20 Fluid immersion. When tested as specified in 4.7.21, there shall be no damage to the O-ring nor shall any of the test fluid escape through to the back of the test apparatus.

3.5.21 Ozone exposure. When tested as specified in 4.7.22, there shall be no evidence of damage due to ozone exposure, and the following requirements shall be met, as applicable:

a. Contact resistance (see 3.5.6.1).
b. Tensile strength (see 3.5.12).
c. Assembly resistance (see 3.5.6.3).
d. Detent action (see 3.5.1).

3.5.22 Salt spray. When tested as specified in 4.7.23, there shall be no evidence of corrosion, and the following requirements shall be met, as applicable:

a. Clamp release force (see 3.5.8).
b. Contact resistance (see 3.5.6.1).
c. Clamp connector resistance (see 3.5.6.2).
d. Assembly resistance (see 3.5.6.3).
e. Detent action (see 3.5.1).

3.5.23 Lightning current. When tested as specified in 4.7.24, assemblies shall be capable of carrying the current applied for the amount of time specified.

3.6 Marking. The cable or jumper assembly should be permanently marked, by means of an identification band, with the manufacturer's name or trademark, date code, and the Part or Identifying Number (PIN) as specified. Stamping should be in accordance with MIL-STD-1285 where space permits. For individual parts, stamping can be done on the plug, receptacle or clamp connector.

3.7 Aircraft grounding identification. Grounding receptacles installed in aircraft bodies shall be identified either by decalcomania or painted ground symbol. Decalcomania shall be as specified on the individual specification sheets. Dimensions and colors of the painted symbol shall be as specified (see 3.1).

3.8 Workmanship. The connector and assemblies shall be constructed and finished in a workmanlike manner. Particular attention shall be given to neatness and thoroughness of welding, riveting, brazing, plating, assembly, and freedom of parts from burrs and sharp edges.

3.9 Recycled, recovered, or environmentally preferable materials. Recycled, recovered, or environmentally preferable materials should be used to the maximum extent possible, provided that the material meets or exceeds the operational and maintenance requirements, and promotes economically advantageous life cycle costs.

Downloaded from http://www.everyspec.com

4. VERIFICATION

4.1 Classification of inspections. The inspections specified herein are classified as follows:

a. Materials inspection (see 4.3).
b. Qualification inspection (see 4.5).
c. Conformance inspection (see 4.6).

4.2 Test connectors. When required, connectors shall be mated with a connector specified as a mating connector per this specification. Approval of the test connector for use in the test shall not constitute acceptance of the part number represented by the test connector. In the event of failure of the test connector, a new one shall be substituted and the test continued. Rejection of a test connector will not constitute a failure of the connector under test.

4.2.1 Test apparatus. When required, the receptacle shall be installed in a test apparatus in which the aluminum panel thickness is .030 inch ± .005 (.76 ± .13 mm), and the apparatus in which the receptacle is inserted shall have a minimum area of 4 inches (102 mm) long 4 inches (102 mm) wide. Test points are between the back end of the plug and a point on the panel 2 inches ± .01 (51 ± .3 mm) from the axis of the receptacle.

4.3 Materials inspection. Materials inspection shall consist of certification supported by verifying data that the materials meet the requirements for fabricating the connectors and assemblies (see 3.3) and as specified (see 3.1).

4.4 Inspection conditions. Unless otherwise specified, all inspections shall be performed in accordance with the test conditions specified in EIA-364.

4.5 Qualification inspection. Qualification inspection shall be performed at a laboratory acceptable to the Government (see 3.2 and 6.3) on sample units produced with equipment and procedures normally used in production.

4.5.1 Sample size. Sample size shall be as specified herein.

4.5.1.1 Connectors and jumper cable assemblies. Sample sizes for connectors and jumper cable assemblies shall be 12 specimens, which have passed the tests in group I. They shall be subdivided into three groups of four specimens and subject to the test in groups II, III, and IV in table II, in the order shown.

4.5.1.2 Grounding assemblies. Sample size shall consist of 10 specimens, with 5 tested as individual parts (plugs and grounding clamp connectors only), and 5 tested as a full assembly as specified in group III in table II, in the order shown.

4.5.2 Failures. One or more failures shall be cause for refusal to grant qualification approval.

4.5.3 Retention of qualification. To retain qualification, the manufacturer shall forward a report to the qualifying activity at 24 month intervals for group A and 36 month intervals for group B. The qualifying activity shall establish the initial reporting date. The report shall consist of:

a. A summary of the results of the tests performed for inspection of product for delivery group A, indicating as a minimum the number of lots that have passed and the number that have failed. The results of tests of all reworked lots shall be identified and recorded.

Downloaded from http://www.everyspec.com

b. The results of tests performed for periodic inspection, group B, including the number and mode of failures. The test report shall include results of all periodic inspection tests performed and completed during the 36-month period. If the test results indicate nonconformance to specification requirements, and corrective action acceptable to the qualifying activity has not been taken, action may be taken to remove the failing product from the qualified products list.

Failure to submit the report within 30 days after the end of each 24-month period may result in loss of qualification for the product. In addition to the periodic submission of inspection data, the contractor shall immediately notify the qualifying activity at any time during the 24-month period that the inspection data indicates failure of the qualified product to meet the requirements of this specification.

In the event that no production occurred during the reporting period, a report shall be submitted certifying that the company still has the capability and facilities necessary to produce the item. If during 2 consecutive reporting periods, there has been no production, the manufacturer may be required, at the discretion of the qualifying activity, to submit a representative product of each style, to testing in accordance with the qualification inspection requirements.

TABLE II. Qualification inspection, connectors and jumper assemblies. 1/

Inspection	Plug	Receptacle	Clamp connector	Jumper assembly	Requirement paragraph	Test Paragraph
Group I						
Visual and mechanical Inspection	X	X	X	X	3.1, 3.3, 3.4 3.6, 3.8	4.7.1
Detent action	X	X			3.5.1	4.7.2
Handgrip force			X		3.5.2	4.7.3
Side loading		X			3.5.3	4.7.4
Torque		X			3.5.4	4.7.5
Engagement	X	X			3.5.5	4.7.6
Contact resistance	X	X			3.5.6.1	4.7.7.1
Clamp connector resistance			X		3.5.6.2	4.7.7.2
Assembly resistance				X	3.5.6.3	4.7.7.3
Group II						
Cable attachment			X		3.5.7	4.7.8
Clamp release force (initial)			X		3.5.8.1	4.7.9
Clamp release force (after conditioning)			X		3.5.8.2	4.7.9
Clamping life			X		3.5.9	4.7.10
Vibration		X			3.5.10	4.7.11
Durability	X	X			3.5.11	4.7.12
Flexibility				X	3.5.13	4.7.14
Tensile strength	X			X	3.5.12	4.7.13
Crush	X				3.5.14	4..7.15

See notes at end of table.

Downloaded from http://www.everyspec.com

TABLE II. Qualification inspection, connectors and jumper assemblies – Continued.

Inspection	Plug	Receptacle	Clamp connector	Jumper assembly	Requirement paragraph	Test paragraph
Group III						
Humidity	X	X	X	X	3.5.15	4.7.16
Temperature cycling	X	X	X	X	3.5.16	4.7.17
Drop			X		3.5.17	4.7.18
Altitude – low temperature		X 2/			3.5.18	4.7.19
Dust	X	X			3.5.19	4.7.20
Fluid immersion		X 2/			3.5.20	4.7.21
Salt spray	X	X	X	X	3.5.22	4.7.23
Group IV						
Lightning current 3/				X	3.5.23	4.7.24

1/ - X indicates that a test is applicable.
2/ - As applicable.
3/ - For initial qualifications only.

4.6 Conformance inspection.

4.6.1 Inspection lot. An inspection lot shall consist of all specimens of the same configuration produced under essentially the same conditions, and offered for inspection at one time.

4.6.1.1 Group A inspection. Group A inspection shall consist of the inspections specified in table III. There shall be no failures.

TABLE III. Group A inspection.

Inspection	Requirement paragraph	Test method paragraph
Visual and Mechanical	3.1,3.3,3.4	4.7.1
Engagement	3.5.5	4.7.6
Contact resistance	3.5.6.1	4.7.7.1
Clamp connector resistance 1/	3.5.6.2	4.7.7.2

1/ As applicable, see table II, group I.

4.6.1.1.1 Sampling plan (group A). Table II tests shall be performed on a production lot basis. Sample size shall be randomly selected in accordance with table IV. If one or more defects are found, the lot shall be rescreened and defects removed. A new sample, as specified in table IV, shall be randomly selected. If one or more defects are found in the second sample lot, the lot shall not be supplied to this specification.

Downloaded from http://www.everyspec.com

TABLE IV. Lot and sample size.

Lot size	Sample size
1 to 12	100 %
13 to 150	13 units
151 to 280	20 units
281 to 500	29 units
501 to 1200	34 units
1201 to 3200	42 units
3201 to 10,000	50 units
10,001 to 35,000	60 units
35,001 to 150,000	74 units
150,001 to 500,000	90 units
500,001 and over	102 units

4.6.1.1.2 Rejected lots. If an inspection lot is rejected, the supplier may rework it to correct defects, or screen out the defective units, and resubmit for re-inspection. Resubmitted lots shall be inspected using tightened inspection. Such lots shall be separate from new lots, and shall be clearly identified as re-inspected lots.

4.6.2 Periodic inspection. Periodic inspection shall consist of the group B inspection. Except where the results of this inspection show noncompliance with the applicable requirements (see 4.6.3), delivery of products which have passed group A shall not be delayed pending the results of the periodic inspections.

4.6.2.1 Group B inspection. Group B inspection shall consist of the inspections shown in table II, groups II and III, as applicable, in the order specified. Group B inspection shall be made on sample units selected from lots which have passed the group A inspection. Sample units which have been subjected to group B inspection shall not be delivered on the contract.

4.6.2.1.1 Sampling plan. A sample size shall be randomly selected in accordance with table IV. If one or more defects are found, the lot shall be rescreened and defects removed. If one or more defects are found, a new sample shall be randomly selected from table IV. If one or more defects are found, the lot shall not be supplied to this specification.

4.6.2.1.1.1 Connectors and jumper cable assemblies. Sample sizes for connectors and jumper cable assemblies shall be 6 specimens (group I), which shall be subdivided into two groups of three specimens and subjected to the tests in groups II and III in table II.

4.6.2.1.1.2 Grounding assemblies. Sample size shall consist of 6 specimens, with 3 tested as individual parts (plugs and grounding clamp connectors only), and 3 tested as a full assembly as specified in group III in table II.

4.6.2.1.2 Disposition of sample units. Sample units which have been subjected to group B inspection shall not be delivered on the contract.

Downloaded from http://www.everyspec.com

4.6.3 Noncompliance. If a sample fails to pass group B inspection, the manufacturer shall notify the qualifying activity and the cognizant inspection activity of such failure and take corrective action on the materials or processes, or both, as warranted, and on all units of product which can be corrected and which were manufactured under essentially the same conditions with essentially the same materials and processes, and which are considered subject to the same failure. Acceptance and shipment of the product shall be discontinued until corrective action, acceptable to the qualifying activity has been taken. After the corrective action has been taken, group B inspection shall be repeated on additional sample units (all inspections, or the inspection which the original sample failed, at the option of the qualifying activity). Group A inspection may be reinstituted; however, final acceptance and shipment shall be withheld until the group B inspection has shown that the corrective action was successful. In the event of failure after re-inspection, information concerning the failure shall be furnished to the cognizant inspection activity and the qualifying activity.

4.7 Methods of inspection.

4.7.1 Visual and mechanical inspection. Specimens shall be inspected to verify that the dimensions, materials, design, construction, markings, and workmanship are in accordance with the applicable requirements (see 3.1, 3.3, 3.4, 3.6 and 3.8).

4.7.2 Detent action (see 3.5.1). The connectors shall be tested in accordance with test procedure 13 of EIA-364. The following conditions shall apply:

a. during insertion tests, receptacles shall be tested with a test plug at maximum pin diameter (see 4.2).
b. during withdrawal tests, receptacles shall be tested first with a test plug at maximum pin diameter, then with a test plug at minimum pin diameter.
c. Repeat the test using the ISO 46 and NATO STANG 3632 plugs at maximum pin diameter.

4.7.3 Hand-grip force (see 3.5.2). The grounding clamp connector shall be connected to and removed from a .750 ± .010 inch (19.05 ± .25 mm) diameter rod, with the force required to open the clamp measured across the handles at a point .500 ± .125 inch (12.70 ± 3.18 mm) from the end.

4.7.4 Side loading (see 3.5.3). The receptacle shall be mated with a test plug, on which a force of 20 pounds shall be applied one inch from the face of the receptacle and in two directions mutually perpendicular to the axis of insertion.

4.7.5 Torque (see 3.5.4). The mounting nut on the receptacle shall be tightened with a torque of 20 inch pounds until the nut rotation has stopped. The nut shall then be loosened and the threads inspected.

4.7.6 Engagement (plugs and receptacles (see 3.5.5)). The connector shall be mated with a test connector and a torque of one inch-pound shall be applied to the bass of the plug in attempt to rotate the plug in the receptacle. The plug shall then be tested for free movement in the directions of insertion and withdrawal.

4.7.7 Resistance (see 3.5.6). The test shall be in accordance with test procedure 06 of EIA-364. test current shall be 10 ±1 amperes and the duration of current flow shall be 10 seconds minimum. Inability of the specimen to withstand this current shall constitute a failure. Voltmeter probes shall be placed at both ends of the specimen where current is applied.

Downloaded from http://www.everyspec.com

4.7.7.1 Contact resistance (see 3.5.6.1). Test connectors and test apparatus shall be used (see 4.2 and 4.2.1). test points are between the back end of the plug and at a point on the panel 2.00 ± .01 inches (51.8 ±.3 mm) from the axis of the receptacle. This test shall be repeated using the ISO 46 and NATO STANAG 3632 plugs at minimum pin diameters.

4.7.7.2 Clamp connector resistance (see 3.5.6.2). The grounding clamp connector shall be attached to a steel rod of .750 ± .010 inch (19.05 + .25 mm) diameter. A test wire conforming to MIL-DTL-83420 shall be attached to the handle. Test current applied from the steel rod to the wire with each contact point within .500 inch (12.70 mm) from the clamp connector.

4.7.7.3 Assembly resistance (see 3.5.6.3). Test current shall be applied at both ends of the assembly. Assemblies with plugs shall be mated and the current applied on the test apparatus, while assemblies with grounding clamp connectors shall have clamp connectors attached to steel rods of .750 ± .010 inch (19.05 ± .25 mm) diameter and current shall be applied .500 ± .125 inch (12.70 ± 3.18 mm) from the haw of the clamp.

4.7.8 Cable attachment (see 3.5.7). The clamp connector cable attachment provisions shall be tested by applying a tensile force between the clamp connector and an attached cable using a standard tensile testing machine. The test shall be made with a head speed of one inch per minute. With the same cable attached the grounding clamp connector shall pass the clamp connector resistance requirement of 3.5.6.2.

4.7.9 Clamp release force (clamp connector only) (see 3.5.8). Using a test setup as shown on figure 1, the force required to free the rod in the grounding clamp connector shall be determined.

4.7.10 Clamping life (see 3.5.9). With an 18-inch length of cable attached to one handle of the grounding clamp connector by normal attachment provisions, the clamp connector shall be clamped onto a 0.750 inch (19.05 mm) nominal diameter drill rod which is securely held in a horizontal position. Sufficient force shall be applied to the cable end to disengage the clamp connector from the rod permitting the jaws to snap shut. This constitutes one cycle. The connector shall be subjected to 5,000 such cycles. The grounding clamp connector shall then successfully pass the clamp release force requirement of 3.5.8 and the clamp connector resistance requirement of 3.5.6.2.

4.7.11 Vibration (see 3.5.10). The test shall be performed in accordance with test procedure 28 of EIA-364. The following conditions shall apply:

a. Test condition IV.
b. Test apparatus shall be used for receptacles (see 4.2.1).
c. After completion of the test, the detent action test of 4.7.2 and the contact resistance test of 4.7.7.1 shall be performed.

4.7.12 Durability (see 3.5.11). The test shall be performed in accordance with test procedure 09 of EIA-364. The following conditions shall apply:

a. Test preparation: Connectors shall be mated.
b. 5,000 cycles shall be completed.
c. After completion of the test, the detent action test of 4.7.2 and the contact resistance test of 4.7.7.1 shall be performed.

Downloaded from http://www.everyspec.com

4.7.13 Tensile strength (see 3.5.12). The test shall be performed in accordance with method 211 of MIL-STD-202. The following conditions shall apply:

a. Test condition A.
b. Test load: as specified in the individual specification sheets.

4.7.14 Flexibility (see 3.5.13). One end of the jumper cable assembly shall be held stationary under a tension of 2.0 ± .1 pound (8.90 ± .5 newtons) while the other end of the jumper is rotated in a circle which forms the base of a cone having an included angle of 22° ± 2°. A cycle shall consist of one complete revolution; 300,000 cycles shall be performed. After completion of the test, the tensile strength test of 4.7.13 and the assembly resistance test of 4.7.7.3 shall be performed.

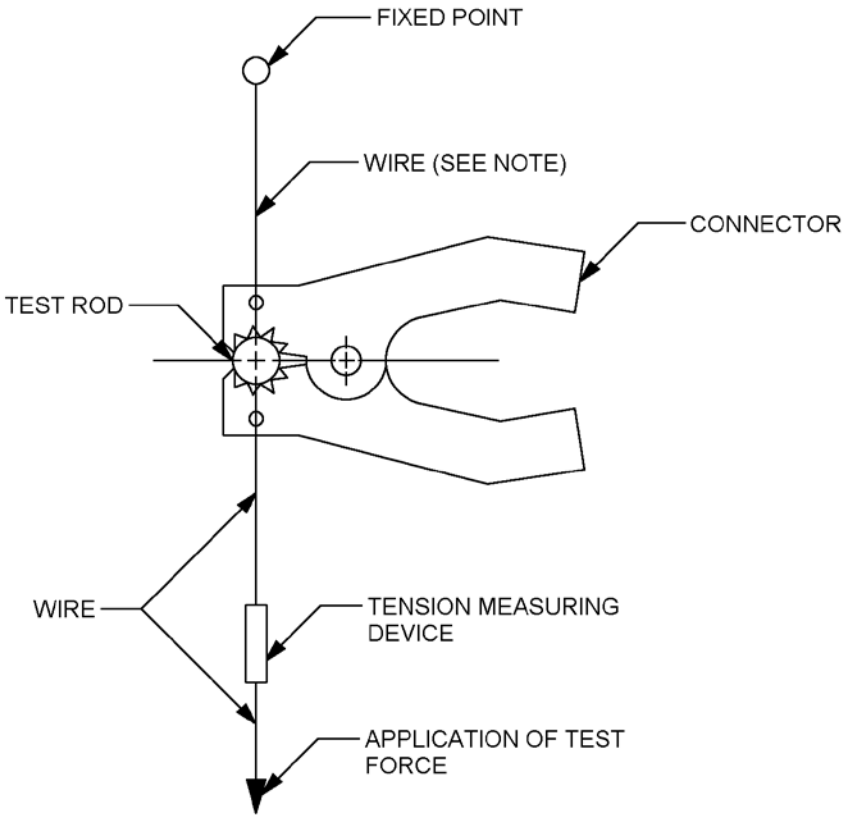

NOTE: Wires shall be attached to roll pins if used.

FIGURE 1. Clamp release force test.

4.7.15 Crush (see 3.5.14). The test shall be performed in accordance with test procedure 40 of EIA-364. The following condition shall apply:

a. One load shall be applied to the plug itself in two mutually perpendicular axes from the insertion axes.

Downloaded from http://www.everyspec.com

b. After completion of the test, the detent action test of 4.7.2 and the contact resistance test of 4.7.7.1 shall be performed.

4.7.16 Humidity (see 3.5.15). The test shall be performed in accordance with test procedure 31 of EIA-364. The following conditions shall apply:

a. Test condition: Type II up to but excluding step 7a.
b. Test preparation: Connectors shall be unmated.
c. Test apparatus shall be used for receptacles (see 4.2.1).
d. After completion of the test, the clamp release force test of 4.7.9, the contact resistance test of 4.7.7.1, the clamp connector resistance test of 4.7.7.2, the detent action test of 4.7.2, and the assembly resistance test of 4.7.7.3 shall be performed, as applicable.

4.7.17 Temperature cycling (see 3.5.16). The test shall be performed in accordance with test procedure 32 of EIA-364. The following conditions shall apply:

a. Test condition: Condition I, 100 cycles.
b. Test preparation: Connectors shall be unmated.
c. Test apparatus shall be used for receptacles (see 4.2.1).
d. After completion of the test, the clamp release force test of 4.7.9, the contact resistance test of 4.7.7.1, the clamp connector resistance test of 4.7.7.2, the detent action test of 4.7.2, and the assembly resistance test of 4.7.7.3 shall be performed, as applicable.

4.7.18 Drop (see 3.5.17). The grounding clamp connector shall be dropped onto solid concrete from a height of 10 feet with a random free fall. The clamp connector shall be dropped 25 times. After completion of the test, the clamp release force test of 4.7.9 and the clamp connector resistance test of 4.7.7.2 shall be performed, as applicable.

4.7.19 Altitude-low temperature (see 3.5.18). The test shall be performed in accordance with test procedure 105 of EIA-364. The following conditions shall apply:

a. Test apparatus shall be used for receptacles (see 4.2.1).
b. After completion of the test, the contact resistance test of 4.7.7.1, the detent action test of 4.7.2, and the assembly resistance test of 4.7.7.3 shall be performed, as applicable.

4.7.20 Dust (see 3.5.19). The test shall be performed in accordance with method 110 of MIL-STD-202. The following conditions shall apply:

a. Test apparatus shall be used for receptacles (see 4.2.1).
b. Test preparation: Connectors shall be unmated.
c. After completion of the test, the clamp release force test of 4.7.9, the contact resistance test of 4.7.7.1, the clamp connector resistance test of 4.7.7.2, the detent action test of 4.7.2, and the assembly resistance test of 4.7.7.3 shall be performed, as applicable.

4.7.21 Fluid immersion (see 3.5.20). The test shall be performed in accordance with test procedure 10 of EIA-364. The following conditions shall apply:

a. Test apparatus shall be used for receptacles (see 4.2.1).
b. Test preparation: Receptacles shall be unmated.

Downloaded from http://www.everyspec.com

4.7.22 Ozone exposure (see 3.5.21). The test shall be performed in accordance with test procedure 14 of EIA-364. The following conditions shall apply:

a. Test apparatus shall be used for receptacles (see 4.2.1).
b. Test preparation: Receptacles shall be unmated.
c. After completion of the test, the tensile strength test of 4.7.13, the contact resistance test of 4.7.7.1, the detent action test of 4.7.2, and the assembly resistance test of 4.7.7.3 shall be performed, as applicable.

4.7.23 Salt spray (see 3.5.22). The test shall be performed in accordance with test procedure 26 of EIA-364. The following conditions shall apply:

a. Test condition: C.
b. Test preparation: Connectors shall be unmated.
c. Test apparatus shall be used for receptacles (see 4.2.1).
d. After completion of the test, the clamp release force test of 4.7.9, the contact resistance test of 4.7.7.1, the clamp connector resistance test of 4.7.7.2, the detent action test of 4.7.2, and the assembly resistance test of 4.7.7.3 shall be performed, as applicable.

4.7.24 Lightning current (see 3.5.23). One lightning charge shall be applied across the specimen. The following conditions shall apply:

a. Current shall be determined by taking the ration of the voltage applied across the specimen to minimum measured resistance, or with a current measuring device.
b. Peak current shall be 100,000 amperes.
c. The rate of rise of current shall be 20,000 amperes per microsecond.
d. duration of current at 50,000 amperes and above shall be not less than 20 microseconds, and at or above 90,000 amperes shall be from 5 to 10 microseconds.

5. PACKAGING

5.1 Packaging. For acquisition purposes, the packaging requirements shall be as specified in the contract or order (6.2). When packaging of materiel is to be performed by DoD or in-house contractor personnel, these personnel need to contact the responsible packaging activity to ascertain packaging requirements. Packaging requirements are maintained by the Inventory Control Point's packaging activities within the Military Service or Defense Agency, or within the Military Service's system commands. Packaging data retrieval is available from the managing Military Department's or Defense Agency's automated packaging files, CD-ROM products, or by contacting the responsible packaging activity.

6. NOTES

(This section contains information of a general or explanatory nature that may be helpful, but is not mandatory.)

6.1 Intended use. Connectors and assemblies are intended for use in grounding aircraft, maintenance trucks, fuel trucks, and any other apparatus where there exists the possibility of an electrical potential difference between aircraft and other apparatus during the process of loading or unloading volatile materials. In addition, these components are intended for use in grounding out lightning strikes on aircraft or apparatus in contact with the aircraft.

Downloaded from http://www.everyspec.com

6.2 Acquisition requirements. Acquisition documents should specify the following:

a. Title, number, and date of this specification.
b. Title, number, and date of the applicable specification sheet, and the complete PIN (see 3.1).
c. Packaging requirements (see 5.1).

6.3 Qualifications. With respect to products requiring qualification, awards will be made only for products which are, at the time of award of contract, qualified for inclusion in Qualified Products List QPL No. 83413 whether or not such products have actually been so listed by that date. The attention of the contractors is called to these requirements, and manufacturers are urged to arrange to have products that they propose to offer to the Federal Government tested for qualification in order that they may be eligible to be awarded contracts or orders for the products covered by this specification Information pertaining to qualification of products may be obtained from (DLA Land and Maritime: Attn: VQP, PO Box 3990, Columbus, OH 43218-3990, email: vqp.st@dla.mil. An online listing of products qualified to this specification may be found in the Qualified Products Database (QPD) at https://assist.dla.mil.

6.4 Definitions.

6.4.1 Grounding assembly. A grounding assembly is that combination of grounding plug, cable, terminal, or grounding clamp connector used in connecting an aircraft and associated vehicle to ground or to each other.

6.4.2 Grounding clamp connector. A grounding clamp connector is a spring loaded device designed to be connected to a direct or indirect source of ground potential by clamping.

6.4.3 Jumper assembly. A jumper assembly is that combination of grounding wire and terminals used for the purpose of connecting different parts of aircraft for the purpose of providing a continuous path of grounding conduction.

6.4.4 Grounding plug. A grounding plugs is that component of a grounding assembly which mates with a grounding receptacle to provide grounding from aircraft to grounding assembly.

6.4.5 Grounding receptacle. A grounding receptacle is that component, mateable with the grounding plug, which is installed on aircraft or other systems requiring grounding. It may be a one piece part, or it may consist of a receptacle housing which is installed on the body itself and contains internal threads, and the insert, which mates with the grounding plug and has external threads compatible with the threads on the housing.

6.4.6 Decalcomania. The decalcomania is the sign applied at the grounding receptacle to indicate where the grounding plug is to be inserted to accomplish the grounding process.

6.5 Environmentally preferable material. Environmentally preferable materials should be used to the maximum extent possible to meet the requirements of this specification. As of the dating of this document, the U.S. Environmental Protection Agency (EPA) is focusing efforts on reducing 31 priority chemicals. The list of chemicals and additional information is available on their website at http://www.epa.gov/osw/hazard/wastemin/priority.htm. Included in the list of 31 priority chemicals are cadmium, lead, and mercury. Use of these materials should be minimized or eliminated unless needed to meet the requirements specified herein (see Section 3).

Downloaded from http://www.everyspec.com

6.6 Guidance on use of alternative parts with less hazardous or nonhazardous materials. This specification provides for a number of alternative plating materials via the PIN. Users should select the PIN with the least hazardous material that meets the form, fit and function requirements of their application.

6.7 Subject term (keyword) listing.

Jumper
Cable
Plugs
Receptacles
Accessories

6.8 International standardization agreements implementation. This specification implements NATO STANAG 3632, and ISO 46. When amendment, revision or cancellation of this specification is proposed, the preparing activity must coordinate the action with the U.S National Point of Contact for the international standardization agreement, as identified in the ASSIST database at: https://assist.dla.mil.

6.9 Changes from previous issue. The margins of this specification are marked with vertical lines to indicate where changes from the previous issue were made. This was done as a convenience only and the Government assumes no liability whatsoever for any inaccuracies in these notations. Bidders and contractors are cautioned to evaluate the requirements of this document based on the entire content irrespective of the marginal notations and relationship to the last previous issue.

CONCLUDING MATERIAL

Custodians:
Army – AV
Navy – AS
Air Force – 85
DLA – CC

Preparing activity:
DLA – CC

Review activities:
Army – AR, CR, CR4, MI
Navy – MC
Air Force – 02, 13, 99

(Project 5935-2010-193)

NOTE: The activities listed above were interested in this document as of the date of this document. Since organizations and responsibilities can change, you should verify the currency of the information above using the ASSIST Online database at https://assist.dla.mil.