Downloaded from http://www.everyspec.com

INCH-POUND

MIL-DTL-7965G
22 January 2008
SUPERSEDING
MIL-DTL-7965F
22 June 2005

DETAIL SPECIFICATION

ANTENNA COMPONENTS: ANTIPRECIPITATION STATIC

This specification is approved for use by all Departments and Agencies of the Department of Defense.

1. SCOPE

1.1 Scope. This specification covers antiprecipitation static antenna components.

1.2 Classification. The antenna components are to be one of the following two classes, as specified (see 6.3):

Class A: Capable of withstanding antenna transmission voltages of 7,500 volts at sea level.

Class B: Capable of withstanding antenna transmission voltages of 10,000 volts at an altitude of 50,000 feet.

2. APPLICABLE DOCUMENTS

2.1 General. The documents listed in this section are specified in sections 3 and 4 of this specification. This section does not include documents cited in other sections of this specification or recommended for additional information or as examples. While every effort has been made to ensure the completeness of this list, document users are cautioned that they must meet all specified requirements of documents cited in sections 3 and 4 of this specification, whether or not they are listed

2.2 Government documents.

2.2.1 Specifications, standards, and handbooks. The following specifications, standards, and handbooks form a part of this document to the extent specified herein. Unless otherwise specified, the issues of these documents are those cited in the solicitation or contract.

SPECIFICATIONS

DEPARTMENT OF DEFENSE

MIL-W-6370 - Wire, Electrical, Insulated, Antenna.
MIL-S-6715 - Springs; Helical, Aircraft.

STANDARDS

DEPARTMENT OF DEFENSE

MIL-STD-130 - Identification Marking of U.S. Military Property.
MIL-STD-810 - Test Method Standard for Environmental Engineering Construction and Laboratory Tests.

(Copies of these documents are available online at http://assist.daps.dla.mil/quicksearch/ or http://www.assist.daps.dla.mil/ or from the Standardization Document Order Desk, 700 Robbins Avenue, Building 4D, Philadelphia, PA 19111-5094.)

2.3 Non-Government publications. The following documents form a part of this document to the extent specified herein. Unless otherwise specified, the issues of these documents are those cited in the solicitation or contract.

Comments, suggestions, or questions on this document should be addressed to: Defense Supply Center Columbus, ATTN: DSCC-VAT, P.O. Box 3990, Columbus, OH 43218-3990, TubesAmps@dscc.dla.mil. Since contact information can change, you may want to verify the currency of this address information using the ASSIST Online database at http://assist.daps.dla.mil.

Downloaded from http://www.everyspec.com

SAE INTERNATIONAL (SAE) AEROSPACE MATERIALS SPECIFICATIONS (AMS)

SAE-AMS-C-83231 - Coatings, Polyurethane, Rain Erosion Resistant for Exterior Aircraft and Missile Plastic Parts

(Copies may be obtained online at www.sae.org Society of Automotive Engineers documents are available through SAE INTERNATIONAL, 400 Commonwealth Drive, Warrendale, PA 15096-0001, http://www.sae.org.)

2.4 Order of precedence. In the event of a conflict between the text of this document and the references cited herein, the text of this document takes precedence. Nothing in this document, however, supersedes applicable laws and regulations unless a specific exemption has been obtained.

3. REQUIREMENTS

3.1 Preproduction. This specification provides for preproduction testing.

3.2 Components. The equipment covered by this specification shall include the antenna components and special tools specified in Supplement 1.

3.3 General. The components, materials, and mechanical assemblies used in the construction of this equipment shall be in accordance with the applicable MS drawings. In the event substitution of materials is proposed, prior authorization of the acquiring activity is required. Such substitution will be allowed only on the basis of data furnished by the contractor demonstrating actual equivalence and proof that the performance of the finished part will be satisfactory.

3.3.1 Springs. All springs required in the fabrication of antenna components shall be made of stainless steel wire, spring temper, manufactured in accordance with MIL-S-6715.

3.3.2 Surface treatment. Stainless steel parts shall be cleaned in accordance with best manufacturing practices. All other exposed metal parts shall be protected as required against corrosion.

3.4 Design. The equipment covered by this specification shall be primarily designed to be used with insulated antenna wire, type I, conforming to MIL-W-6370, to make up complete aircraft antenna systems insulated with respect to space.

3.4.1 Strength. As a design objective, the mechanical strength of the components covered by this specification shall be such that any mechanical or electrical failure of the antenna system caused by mechanical breakage or deformation shall be evidenced first by failure of the wire, but at not less than the specified strength of the wire.

3.4.2 Chucks. Chucks having spring-loaded jaws shall be used to secure the antenna wire in antenna components. The chucks shall be designed to meet the following requirements.

3.4.2.1 Engagement. The chuck shall secure the antenna wire when a stripped non-insulated end of the conductor is inserted into the chuck the entire length of the chuck jaw. The chuck shall hold the wire, and the grip shall be sufficient to satisfy the tests specified herein.

3.4.2.2 Disengagement. The chuck shall release the wire when its jaws are depressed by means of a wire retriever.

3.5 Construction. Antenna components and special tools shall conform to the applicable MS drawings.

3.5.1. Coating (rain erosion). Masts, adapters, and vee supports covered by this specification shall be coated in accordance with SAE-AMS-C-83231.

3.6 Pure tin: The use of pure tin, as an underplate or final finish, is prohibited both internally and externally. Tin content of antenna and solder shall not exceed 97 percent, by mass. Tin shall be alloyed with a minimum of 3 percent lead, by mass (see 6.6).

3.7 Interchangeability. All parts having the same manufacturer's PIN (Part or Identifying Number) shall be directly and completely interchangeable with each other with respect to installation and performance.

3.8 Performance. The antenna components shall perform satisfactorily when subjected to the applicable tests as specified in section 4.

3.8.1 Dead-end mast. The dead-end mast shall provide mechanical support for a terminated end of antenna wire at a distance from the aircraft skin.

3.8.2 Lead-through mast. The lead-through mast shall provide mechanical support for an antenna wire at a distance from the aircraft skin, and provide a point of entry into the aircraft.

Downloaded from http://www.everyspec.com

3.8.3 Antenna adapter. The antenna adapter shall provide an additional means of attachment of a terminated end of antenna wire onto an antenna mast.

3.8.4 Dead-end insert. The dead-end insert shall provide an insulated terminal for an antenna wire within an antenna mast or adapter.

3.8.5 Strain insulator. The strain insulator shall provide electrical insulation between two mechanically connected segments of antenna wire.

3.8.6 Tee connector. The tee connector shall provide mechanical and electrical connection between three segments of antenna wires.

3.8.7 Lead-through insulator. The lead-through insulator shall provide for an antenna entry into the aircraft that is insulated from the aircraft skin.

3.8.8 Lead-through insulator elbow. The lead-through insulator elbow shall provide a means of angular attachment for an antenna wire to the lead-through insulator.

3.8.9 Antenna support sleeve (external thread). The antenna support sleeve (external thread) shall function to reduce flexure and breakage of antenna wire at the point of entry into an antenna mast, antenna adapter, lead-through insulator (or elbow), or antenna vee support.

3.8.10 Antenna take-up. The antenna take-up shall provide a non-insulated means for taking up excess length and quick disconnect of antenna wire, and shall provide a swiveling mechanical connection to the aircraft structure.

3.8.11 Antenna tension take-up. The antenna tension take-up shall provide a non-insulated means for taking up excess length, adjusting tension, and quick disconnect of antenna wire, and shall provide a swiveling mechanical connection to the aircraft structure.

3.8.12 Clamp block. The clamp block shall provide a means for attaching an antenna mast to the aircraft structure.

3.8.13 Vee support. The vee support shall provide an additional means of attachment onto an antenna mast and for direction reversal for a continuous segment of antenna wire.

3.8.14 Antenna support sleeve (internal thread). The antenna support sleeve (internal thread) shall function to reduce flexure and breakage of antenna wire at the point of entry into the antenna take-up or tension take-up.

3.8.15 Antenna take-up swivel. The antenna take-up swivel shall provide a swiveling mechanical connection between the antenna take-up or tension take-up and the aircraft structure.

3.8.16 Antenna mast cap. The antenna mast cap shall provide access to the interior of antenna masts from the forward end.

3.8.17 Antenna mast end and adapter screw. The antenna mast and adapter screw shall provide for positioning of the dead-end insert in the threaded interior of the dead-end mast and antenna adapter.

3.9 Special tools. Antenna components shall be so designed that only the following special tools are required for assembly or disassembly.

3.9.1 Wire retriever. The wire retriever may be used to remove antenna wire from chucks and to guide a knife for safe removal of antenna wire insulation without nicking the conductor.

3.9.2 Mast plug driver. The mast plug driver is a spanner-type device for adjusting the threaded plugs used to position dead-end inserts, and for guiding a knife for safe removal of wire insulation without nicking the conductor.

3.9.3 Pre-tensioning tool. The pre-tensioning tool is used to grip the type I antenna wire for ease of operation of the antenna tension take-up.

3.10 Identification of product. Antenna components shall be identified as required by their individual applicable drawing number and in accordance with MIL-STD-130.

Downloaded from http://www.everyspec.com

3.11 Workmanship. Workmanship shall conform to the expectations of the contract (see 6.3). Surfaces shall be smooth, free from voids, blisters, and cracks. Molded parts shall be clear and free from occlusions, bubbles, cracks, crazes, and weld lines.

4. VERIFICATION

4.1 Classification of inspections. Items covered by this specification shall be subjected to:

a. Preproduction inspection (see 4.2).

b. Conformance inspection (see 4.3).

4.2 Preproduction inspection. Preproduction inspection shall be made on items representative of the production items to be supplied under the contract. Preproduction samples shall consist of 10 of each item to be tested.

4.2.1 Inspections. Preproduction inspections shall consist of the examinations and tests specified in table I and conducted in accordance with 4.5. and 4.6.

Downloaded from http://www.everyspec.com

TABLE I. Applicability of preproduction and sampling inspections.

Components	Examination of product	Dimensions and interchangeability	Solvent resistance	Temperature cycling	Electrical insulation to space 1/	RF heating and breakdown	Tension	Strength	Accelerated life	Calibration	Static load	Corrosion	Drop
Dead-end mast	X	X	X 2/	X		X	X	X					X
Lead-through mast	X	X	X	X		X		X					X
Antenna adapter	X	X	X	X			X						X
Dead-end insert	X	X	X	X----------> X----------3/----------4/-------->X									
Strain insulator	X	X	X	X----------> X---------->X---------X									
Tee connector	X	X	X	X----------> X----------3/----------X									
Lead-through insulator	X	X	X	X		X	X						X
Antenna support sleeve (external thread)	X	X	X			X					X		X
Lead-through insulator elbow	X	X	X	X		X	X				X		X
Antenna take-up	X	X					X		X			X	X
Antenna tension take-up	X	X					X		X	X		X	X
Mast clamp block	X	X	X	X		X		X					X
Antenna vee support	X	X					X						X
Antenna support sleeve (internal thread)	X	X	X										X
Mast cap	X	X	X	X									X
Adapter screw	X	X											
Wire retriever	X	X											
Plug driver	X	X											
Pre-tensioning tool	X	X											

1/ For preproduction approval, all 10 samples must withstand 240 kV.
2/ Symbol X indicates preproduction tests only.
3/ 180 kV maximum (in lieu of 240 kV).
4/ Symbol X ---> X ----> X indicates tests to be performed in sequences on same samples.

Downloaded from http://www.everyspec.com

4.2.2 Preproduction approval. Approval of the preproduction sample items shall be by the acquiring activity upon satisfactory completion of all inspections. No items shall be delivered prior to approval of the preproduction samples.

4.3 Conformance inspections. Conformance inspections shall consist of individual inspections, sampling inspections, and other inspections as deemed necessary by the inspector to determine compliance with this specification. These inspections shall be conducted by the manufacturer under the supervision of the acquiring activity.

4.3.1 Individual inspections. Each component submitted for acceptance shall be subjected to examination of product (see 4.5.1).

4.3.2 Sampling inspections.

4.3.2.1 Sampling. Components submitted for acceptance shall be subjected to testing on a lot basis, as specified in 4.3.2.2.

4.3.2.1.1 Lot. For purposes of this specification, a lot shall be as defined by the following:

4.3.2.1.1.1 Plastic parts. A lot of molded or extruded parts shall consist of all the parts of the same manufacturer's PIN made in the same mold during a continuous run using molding powder from the same original container. A continuous run is considered to allow for overnight shutdowns, but is restricted to production where the temperatures, pressures, and molding cycles are unchanged.

4.3.2.1.1.2 Mechanical assemblies. For mechanical assemblies or subassemblies, such as tension take-up units, chucks, and insert subassemblies, a lot shall consist of all the units of the same manufacturer's PIN submitted for approval at the same time.

4.3.2.2 Inspections. For sampling inspections, lots shall be subjected to the tests listed in table II, as described under 4.5 and 4.6, when applicable to the components as specified in table I. Sampling plan shall be in accordance with 4.3.2.2.1 and table III. Reduced inspection shall be used when permitted. Except where a certain sequence of tests is specified to be run on the same samples, additional numbers of samples may be drawn from lots, at the manufacturer's convenience, for the purpose of expediting the test program.

TABLE II. Sampling inspections.

Test
Dimensions and interchangeability
Electrical insulation to space
Strength
Tension
Radio frequency heating and breakdown
Temperature cycling

4.3.2.2.1 Sampling plan. Statistical sampling and inspection shall be performed on an inspection lot basis with a random sample of waveguides selected in accordance with table III. The acceptance levels shall be based upon the zero defective sampling plan. No failure shall be permitted.

TABLE III. Sampling plan.

Lot size	Sample size
1-13	100 percent
14-150	13
151-280	20
281-500	29
501-1,200	34
1,201-3,200	42
3,201-10,000	50
10,001-35,000	60
35,001-150,000	74
150,000-500,000	90
501,000 and over	102

Downloaded from http://www.everyspec.com

4.3.2.2.2 Applicability of tests. The applicability of tests for components of the antiprecipitation static antenna is indicated in table I.

4.3.2.3 Critical defects. Observation of a critical defect in a representative sample shall be cause for rejection of the entire lot. In lieu of complete rejection, each component of the lot shall be subjected to the critical test to determine acceptability. Critical defects are:

a. The release of a wire under tension or the mechanical failure of a component under test to such an extent that an antenna made up with the particular component would be carried away in flight or would be inoperative.

b. Radio frequency breakdown, evidenced by visible arc discharge, permanent deformation, or inability to maintain a stable voltage-current relationship at the maximum test voltage.

4.3.3 Rejection and retest. If defects are found for the sampling tests used to determine conformance to table I, the lot shall be rejected. If an inspection lot is rejected, the contractor may rework it to correct the defects or screen out the defective units and resubmit for re-inspection. Resubmitted lots shall be re-inspected for the defects causing rejection on any resubmitted lot and 100 percent inspection shall be used where rejection was for critical defects.

4.4 Inspection conditions.

4.4.1 Electrical tests. Unless otherwise specified for electrical tests, components under test shall be assembled to make up simulated antenna systems. Units shall be wired in the normal fashion with type I antenna wire.

4.4.2 Antenna wire. For test purposes, type I antenna wire shall be used. Where the antenna wire is simply used to determine mechanical properties of the component, 50-mil copper-coated steel wire may be substituted, provided the copper coating is at least 5 mils thick and the breaking strength is in excess of 450 pounds.

4.5 Examinations.

4.5.1 Examination of product. Each component submitted for acceptance under contract shall be subjected to detailed physical inspection to determine conformance with the requirements of this specification not covered by tests. Molded plastic parts shall be free from occlusions, bubbles, blisters, cracks, crazes, or weld lines. Acrylic parts shall be given special scrutiny to detect small cracks at points of stress concentration and weld lines. The sealing cavity shall have no surface irregularities or cloudiness. All molded parts shall have a smooth hard surface, except at sprue break-off points, where slight irregularities are not considered detrimental. The inspector shall be provided with evidence to show that the materials used were in accordance with applicable specifications and the molding cycles were the same as those used for the preproduction samples.

4.5.2 Dimensions and interchangeability. Dimensions shall be checked to determine compliance with the applicable drawing requirements and to insure interchangeability.

4.6 Test methods.

4.6.1 Solvent resistance test. The component under test shall be assembled to type I wire and completely immersed in tap water at 160°F for 24 hours. The assembly shall remain intact with no adjustments upon removal, shaken to remove excess surface liquid, and subjected to the radio frequency heating and breakdown test specified in 4.6.4. This test shall be repeated, immersing the component in each of the following fluids: Ethylene glycol, 5 percent salt solution, SAE No. 30 machine oil, and hydraulic oil. There shall be no degradation of performance, or mechanical or electrical failure of any component. At the option of the acquiring activity, the five immersions may be conducted concurrently instead of subjecting a single sample to the entire test.

4.6.2 Temperature cycle. The component under test shall be assembled to type I wire and subjected to the following cycle, repeated 10 times. After 10 cycles, the component shall be held at -65°F for 48 hours.

Ambient temperature, °F	Time, minutes
-65	30
70	15
130	30
70	15

The transition from one ambient to the next shall be immediate. No steps shall be taken to prevent the accumulation of moisture on the component while undergoing this test.

Downloaded from http://www.everyspec.com

4.6.3 Electrical insulation to space. A high-voltage power supply capable of continuously maintaining an output of not less than 240 kV dc shall be used for this test. The output shall be capable of being varied in a nominally continuous manner or in steps not greater than 25 kV per step between 100 and 240 kV. The negative terminal of the high voltage shall be grounded. A metal cylinder having an inner diameter of 18 inches and a length of not less than 36 inches shall be suitably insulated from ground and connected to the positive electrode of the high-voltage supply. The antenna component under test shall be assembled in the normal fashion with adequate lengths of type I wire. The wire shall be mounted under tension, with the components under test located as nearly as possible at the center of the cylinder, with the wire along the axis of the cylinder. In testing dead-end inserts, the insert shall be held in position by the type I wire on one end and a nylon cord with a polyethylene suction cup on the other. A microammeter having a scale length sufficient to indicate minimum currents of one microampere, or less, shall be inserted between ground and the type I wire connected to the component under test. The microammeter should be suitably protected against the surge currents that may occur upon breakdown. For the preproduction samples, the high voltage may be applied at any temperature from -40°F to +100°F. Two hundred and forty kV shall be applied at a rate not greater than two 25 kV steps per minute when the voltage is above 100 kV. The voltage shall be held at 240 kV for at least 10 seconds. Unless examination shows the failure to be in the wire, readings of the microammeter which are in excess of one microampere and which increase with an increase of applied voltage shall constitute evidence of the component failure.

4.6.3.1 Alternative procedure. When approved by the acquiring activity, an alternative test procedure may be used. If the voltage generator has a current output capacity of at least 0.5 milliampere, the microammeter need not be used. The voltage shall be applied in the manner specified in 4.6.3. There shall be no perceptible evidence of corona from the components under test. Perceptible evidence of corona shall consist of a visible spark while the test is being conducted, and of a "pinhole" or carbon track on the component upon inspection after the test.

4.6.4 Radio frequency heating and breakdown. Radio frequency voltage breakdown tests shall be so set up that the voltage applied to the component is measured. The full voltage shall be applied across the chucks or between the chuck and mounting plate, as applicable, after immersion in tap water for 24 hours. The voltage shall be applied with wire inserted in the chucks simulating a typical installation. In the case of the lead-through insulator and elbow and the antenna support sleeve (external thread), a small quantity of insulating and sealing compound may be used in the threaded cavities to prevent entrance of moisture. The component shall be subjected to the altitude, voltage, and frequency conditions specified in table IV for its class. The temperature of the component shall not increase more than 50°F above ambient, and the voltage at the component shall remain stable after 3 minutes at the specified maximum peak voltage. No mechanical breakdown or deformation shall occur.

TABLE IV. Radio frequency heating and breakdown test conditions.

Class of component	Altitude	Voltage	Frequency
A	Sea level	7,500	3 MHz
B	50,000 ft.	10,000	3 MHz

4.6.5 Tension. The component or assembly, mounted to simulate an aircraft installation, shall be subjected to a 450-pound straight pull applied through the type I antenna wire. The tee connector shall be tested only across the horizontal arms. The angle of pull may then be varied up to 20 degrees from the normal direction of the antenna wire for components which are rigidly mounted. This shall be repeated three times with a different wire each time. There shall be no failure of the wire caused by the component or assembly as a result of this test; that is, if the wire breaks, the break should be away from the chuck. There shall be no failure of the component or release of the wire from the chucks as a result of this test.

4.6.6 Strength (flexure or breaking). The assembled mast and mast base, bolted to a suitable plate to simulate an actual installation, shall be subjected to the following tension loads applied at the top of the mast and normal to the axis of the mast.

a. 300 pounds at right angles to the direction of the wire.

b. 900 pounds in the direction of the wire.

There shall be no breakage, permanent deformation, or other deleterious effects as a result of this test.

Downloaded from http://www.everyspec.com

4.6.7 Calibration. The tension take-up unit shall be mounted to a fixed support in such manner that, as a load is applied through the type I wire inserted in the chuck, the tension take-up travel can be measured. Indicated loads shall cause the tension take-up unit to travel as indicated in table V. In addition, the force on the locking sleeve required to disengage the locking spring from the locking groove shall be not less than 3 nor more than 10 pounds.

TABLE V. Calibration of tension takeup units.

Tension take-up position	Pull (pounds)
Initial position	8 ± 5
Fully extended	65 ± 10

4.6.8 Accelerated life test. The tension take-up, take-up, and elbow adapter units shall be assembled with type I wire and mounted as shown on figure 1. The wire tension shall be so adjusted that the tension take-up is at mid-stroke when the mounting point on the eccentric is at the midpoint of its longitudinal travel. The eccentric shall be driven at an angular velocity abruptly varying from 500 to 700 rpm at the rate of 5 cpm. The maximum single amplitude of vibration of the wire shall be 1.5 inches. After 100 hours, there shall be no evidence of undue wear or mechanical failure, and the pull required for full extension of the tension unit shall be not less than 95 percent of the pull required before this test.

4.6.9 Corrosion resistance, tension take-up, and take-up. The tension take-up and take-up assemblies shall be assembled with a convenient length of type I wire and subjected to a continuous salt fog test in accordance with method 509 of MIL-STD-810. After 200 hours, the assemblies shall be subjected to the tension test without failure, and shall be examined for corrosion which would prevent proper functioning.

4.6.10 Static load. The lead-through insulator, adapter, antenna support sleeve, and a 4-foot length of type I wire assembled and rigidly supported as shown on figure 2, shall be subjected to the 100-pound static load for 100 hours. There shall be no mechanical failure as a result of this test.

4.6.11 Drop. The component shall be dropped in a random fashion from a height of at least 10 feet onto a firm, smooth, concrete surface. Components within a lot shall be dropped from varying starting orientations. In the case of the masts, the caps and screws shall be dropped individually, as well as in the assembled condition. After the drop, there shall be no evidence of mechanical or electrical failure which would prevent the components from meeting other requirements of this specification.

5. PACKAGING

5.1 Packaging. For acquisition purposes, the packaging requirements shall be as specified in the contract or order (see 6.3). When packaging of materiel is to be performed by DoD or in-house contractor personnel, these personnel need to contact the responsible packaging activity to ascertain requisite packaging requirements. Packaging requirements are maintained by the Inventory Control Point's packaging activity within the Military Department or Defense Agency, or within the Military Department's System Command. Packaging data retrieval is available from the managing Military Department's or Defense Agency's automated packaging files, CD-ROM products, or by contacting the responsible packaging activity.

Downloaded from http://www.everyspec.com

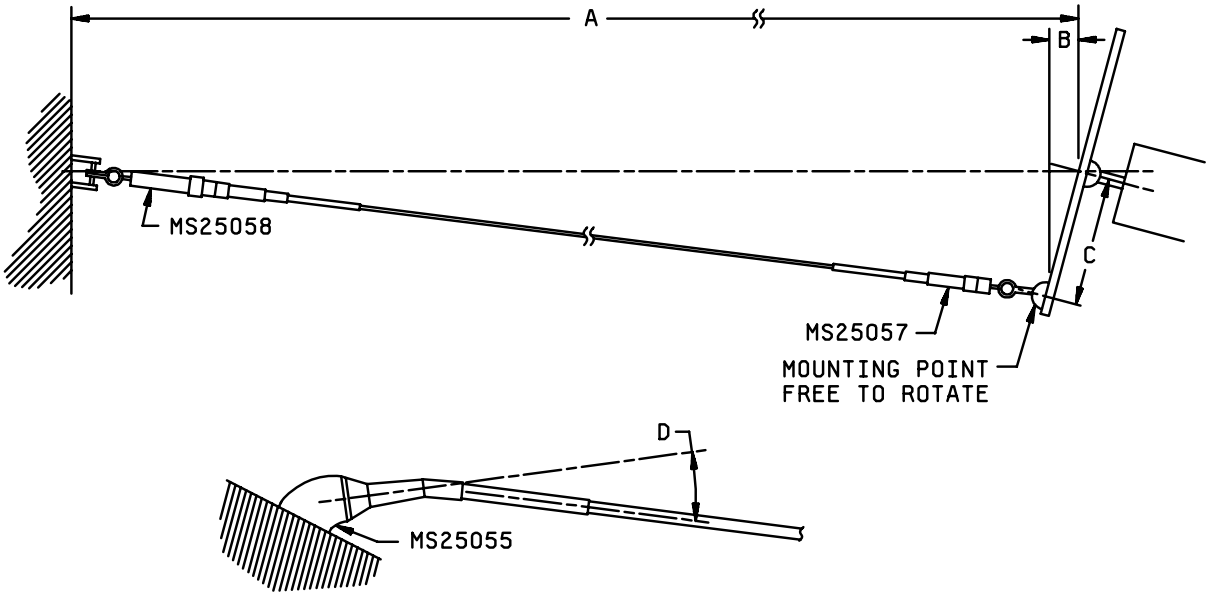

Ltr	Dimensions			
	Inches		Millimeters	
	Min	Max	Min	Max
A	235	245	5969	6223
B	.183	.193	4.65	4.90
C	.745	.755	18.92	19.18
D	15°		15°	

FIGURE 1. Life test setup.

Downloaded from http://www.everyspec.com

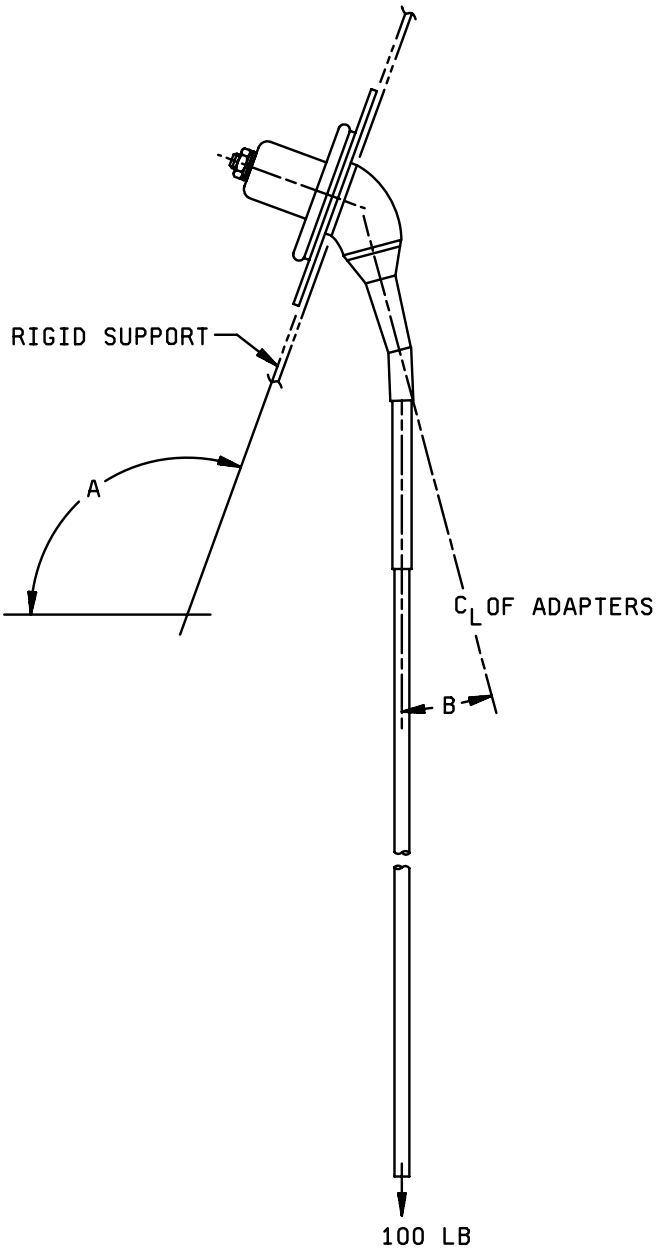

Ltr	Dimensions			
	Inches		Millimeters	
	Min	Max	Min	Max
A	110°		110°	
B	15°		15°	

FIGURE 2. Static load test setup.

Downloaded from http://www.everyspec.com

6. NOTES

(This section contains information of a general or explanatory nature which may be helpful but is not mandatory.)

6.1 Intended use. The components are intended to be used with type I insulated antenna wire to make complete aircraft antenna systems insulated with respect to space, thus avoiding corona discharge under conditions of high electrical gradient and the resulting precipitation static interference.

6.2 Drawing requirements. All drawings submitted must be in accordance with MIL-DTL-31000.

6.3 Acquisition requirements. Acquisition documents must specify the following:

a. Title, number, and date of this specification.

b. Class of antenna components required (see 1.2).

c. Packaging requirements (see 5.1)

d. Data requirements.

e. Where preproduction inspection samples are to be sent and instructions concerning submittal of inspection reports, if required (see 4.3).

f. Workmanship requirements, in accordance with guidance from MIL-HDBK-5400.

6.4 Subject term (key word) listing.

Coating (rain erosion)	RF heating	Support
Corrosion resistance	Solvent resistance	Take-up
Insulator	Static load	Tension
Mast	Support	Wire

6.5 Environmentally preferable material. Environmentally preferable materials should be used to the maximum extent possible to meet the requirements of this specification. As of the dating of this document, the U.S. Environmentally Protection Agency (EPA) is focusing efforts on reducing 31 priority chemicals. The list of chemicals is available on their website at http://www.epa.gov/epaoswer/hazwaste/minimize/chemlist.htm. Further information is available at the following EPA site: http://www.epa.gov/epaoswer/hazwaste/minimize/. Included in the EPA list of 31 priority chemicals are cadmium, lead, and mercury. Use of the materials on the list should be minimized or eliminated unless needed to meet the requirements specified herein (see Section 3).

6.6 Tin whisker growth: The use of alloys with tin content greater than 97 percent, by mass, may exhibit tin whisker growth problems after manufactures. Tin whiskers may occur anytime form a day to years after manufacture and can develop under typical operating conditions, on products that use such materials. Conformal coatings applied over top of a whisker-prone surface will not prevent the formation of tin whiskers. Alloys of 3 percent lead, by mass, have shown to inhibit the growth of tin whiskers. For additional information on this matter, refer to ASTM-B545 (Standard Specification for Electrodeposited Coatings of Tin).

6.7 Changes from previous issue. The margins of this specification are marked with vertical lines to indicate where changes from the previous issue were made. This was done as a convenience only and the Government assumes no liability whatsoever for any inaccuracies in these notations. Bidders and contractors are cautioned to evaluate the requirements of this document based on the entire content irrespective of the marginal notations and relationship to the last previous issue.

Custodians:
Army - AV
Navy - AS
Air Force - 11
DLA - CC

Review activity
Air Force - 99

Preparing activity:
DLA - CC

(Project 5985-2008-006)

NOTE: The activities listed above were interested in this document as of the date of this document. Since organizations and responsibilities can change, you should verify the currency of the information above using the ASSIST Online database at http://assist.daps.dla.mil.