METRIC

MIL-DTL-71026A (AR)
06 June 2000
SUPERSEDING
MIL-M-71026
11 FEBRUARY 1993

MILITARY SPECIFICATION

MAGAZINE, CARTRIDGE, SOFT PACK, REUSABLE, M249, 5.56MM MACHINE GUN (METRIC) GENERAL SPECIFICATION FOR

This specification is approved for use by the U.S. Army Armament Research , Development and Engineering Center and is available for use by all Departments and Agencies of the Department of Defense.

1. SCOPE

1.1 Scope. This specification covers the Magazine, Cartridge, Soft Pack, Reusable, M249, 5.56mm Machine Gun, hereafter referred to as the magazine (see 6.1).

2. APPLICABLE DOCUMENTS

2.1 General. The documents listed in this section are specified in sections 3 and 4 of this specification. This section does not include documents in other sections of this specification or recommended for additional information or as examples. While every effort has been made to ensure the completeness of this list, document users are cautioned that they must meet all requirements documents cited in sections 3 and 4 of this specification, whether or not they are listed.

Beneficial comments (recommendations, conditions, deletions) and any pertinent data which may be of use in improving this document, should be addressed to: Commander, U.S. Army ARDEC, ATTN: AMSTA-AR-QAW-E , Picatinny Arsenal, New Jersey 07806-5000 by using the Standardization Document Improvement Proposal (DD Form 1426) appearing at the end of this document or by letter.

AMSC N/A FSC 1005

DISTRIBUTION STATEMENT A. Approved for public release; distribution is unlimited.

2.2 Government documents.

2.2.1 Specification, standard and handbooks. The following specifications, standards, and handbooks form a part of this document to the extent specified herein. Unless otherwise specified, the issues of these documents are those listed in the issue of the Department of Defense Index of Specifications and Standards(DODISS) and supplement thereto, cited in the solicitation(see 6.2).

SPECIFICATIONS

FEDERAL

TT-C-490	-	Cleaning Methods for Ferrous Surfaces and Pretreatments for Organic Coatings

DEPARTMENT OF DEFENSE

DOD-P-16232	-	Phosphate Coatings, Heavy, Manganese or Zinc Base (For Ferrous Metals)
MIL-L-23398	-	Lubricant, Solid Film, Air Cured, Corrosion Inhibiting, NATO Code Number S-749
MIL-PRF-63460	-	Lubricant, Cleaner and Preservative for Weapons and Weapons Systems
MIL-L-63532	-	Link, Cartridge, Metallic Belt, 5.56mm; M27
MIL-C-63989	-	Cartridge, 5.56mm, Ball, M855
MIL-C-63990	-	Cartridge, 5.56mm, Tracer, M856

(Unless otherwise indicated, copies of the above specifications, standards, and handbooks are available from the Standardization Documents Order Desk, 700 Robins Avenue, Bldg. 4D, Philadelphia, PA 19111-5094.)

2.2.2 Other Government documents, drawings and publications. The following other Government documents, drawings and publications form a part of this document to the extent specified herein. Unless otherwise specified, the issues are those cited in the solicitation.

DRAWINGS

U.S. ARMY ARMAMENT RESEARCH, DEVELOPMENT AND ENGINEERING CENTER (ARDEC)

9348215	-	Support, Feed Box, M249
9352578	-	Feedstrap
11691287	-	Link, Cartridge, Metallic Belt, 5.56mm, M27
12944203	-	Magazine, Cartridge, Soft Pack, Reusable, M249 MG
12944207	-	Clip
12944208	-	Spring, Retention, Magazine
12944209	-	Support
12960862	-	Spring, Retention, Belt
12977158	-	Fastener, Nylon

(Copies of other Government documents, drawings and publications required by contractors in connection with specific acquisition functions should be obtained from U.S. Army TACOM-ARDEC, AMSTA-AR-QAD, Picatinny Arsenal, NJ 07806-5000.)

2.3 Non-Government publications. The following document(s) form a part of this document to the extent specified herein.

AMERICAN SOCIETY FOR TESTING AND MATERIALS (ASTM)

ASTM E 18	-	Standard Test Methods for Rockwell Hardness and Rockwell Superficial Hardness of metallic materials
ASTM B 117	-	Standard Practice for Operating Salt Spray(Fog) Apparatus

(Application for copies of ASTM publications should be addressed to the American Society for Testing and Materials, 100 Barr Harbor Drive, West Conshohocken, PA 19428-2959.

2.4 Order of precedence. In the event of a conflict between the text of this document and the references cited herein, the text of this document takes precedence. Nothing in this document, however, supersedes applicable laws and regulations unless a specific exemption has been obtained.

3. REQUIREMENTS

3.1 First article inspection. When specified in the purchase order (see 6.3), a sample shall be subjected to first article inspection in accordance with 4.3.

3.2 Materials. All materials shall be in accordance with

the applicable drawings and specifications.

3.3 Magazine. The magazine shall comply with all requirements of drawing 12944203, all associated drawings and with all requirements specified in applicable specifications and standards.

3.4 Construction. The construction shall conform in all aspects to the drawings listed in 2.1.2 and as specified herein.

3.5 Performance.

3.5.1 Function Firing.

3.5.1.1 Functioning. The magazine shall be capable of being loaded with 100 rounds of linked ammunition. The feedstrap (dwg. 9352578) shall be attached to the linked ammunition belt. The loaded magazine shall be attached to a M249 machine gun and functioned without any malfunctions attributable to the container. Upon release of the weapon feed cover, the free length of the cartridges shall not fall back into the magazine. After functioning, the magazine shall be capable of being detached from the weapon without difficulty.

3.5.1.2 Endurance. The magazine shall be capable of being functioned (see 3.5.1.1) 50 cycles at ambient temperature without any malfunctions attributable to the magazine. The magazine shall be capable of being functioned (see 3.5.1.1) a total of 5 cycles at high temperature (52° - 3°C) and 5 cycles at low temperature (-54° + 3°C) without any malfunctions attributable to the magazine. 1 cycle is considered to be loading of magazine; attaching to a weapon; firing 100 rounds; and removing the magazine from the weapon.

3.5.2 Dovetail mount. The magazine (inert loaded) shall remain attached to the weapon mount fixture following the drop of a 2.27 kilogram weight minimum, from a minimum height of 305 millimeters, onto the container at a distance of 30 millimeters from the dovetail.

3.5.3 Drop test. When an inert loaded magazine is dropped from a minimum height of 1.524 meters, the magazine shall not deform to the extent that its functional performance is impaired. This includes any separation of the closure mechanism, which results in spillage of the ammunition, or cracking of the container that would prevent its proper functioning.

3.5.4 Springs.

3.5.4.1 Spring, retention, magazine. The spring shall have sufficient strength and spring action to assure that the magazine will remain attached to the weapon mount fixture following the drop of a one-kilogram weight minimum onto the impact device from a minimum height of 305 millimeters. When depressed, the spring shall completely disengage from the weapon mount so as not to hinder removal of the magazine from the weapon mount.

3.5.4.2 Spring, retention, belt. The spring shall be properly seated. The spring shall not dislodge from its seated position during the drop test or any other testing. The spring shall provide sufficient tension to the belt such that a free length of cartridges shall not fall back into the magazine. The force required to pull the cartridges out of the magazine shall not exceed 2.72 kilograms.

3.5.5 Magazine component interface. The following pairs of items shall assemble and disassemble without the use of tools and without damage to components.

a. Magazine, belt and feedstrap.

b. Magazine and weapon feed box support (DWG. 9348215).

3.6 Temperature requirements. All requirements stated for the magazine shall be met under ambient conditions and at the following temperature extremes:

a. 52° - 3°C

b. -54° + 3°C

3.7 Workmanship. Workmanship shall be in accordance with good manufacturing practices and shall in no way impair the functional performance of the assembly. Magazines shall be free of cracks, extraneous material, irregularities and blemishes in the surfaces. Metal parts shall be free of corrosion. The magazine shall be free of rips, tears, irregular sewing and other defects. The cartridge silhouette shall be in the proper location and orientation. The area about the mouth and dovetail shall be uniform in structure and free of sink marks greater than .038 centimeter in depth. The gate shall be flush or below the surface except when the gate is located in the area below the magazine retention spring. A maximum of 2.54 mm above flush is permissible in this area.

4. VERIFICATION

4.1 Classification of verification. The verification requirements specified herein are classified as follows:

a. First article inspection (see 4.3).
b. Conformance inspection (see 4.4).

4.2 Verification conditions. Unless otherwise specified, all verifications shall be performed in accordance with the test conditions specified in 4.5.

4.3 First article. When specified in the contract, a sample of the magazines shall be subjected to first article verification in accordance with Table I.

4.3.1 First article quantity. First article verification shall be performed on the following quantities:

Name	Drawing	Quantity
Magazine, Cartridge, Soft Pack, Reusable, M249 Machine Gun	12944203	63
Feedstrap	9352578	63
Link, Cartridge, Metallic Belt, 5.56mm, M27	11691287	63

4.3.2 Inspections to be performed. The first article verification shall be performed in accordance with Table I.

4.3.3 First article rejection. If any item of the sample fails to comply with the first article requirements, the sample shall be rejected.

TABLE I. First article verification

Title: Magazine Assembly

Sheet 1 of 1
Drawing Number: 12944203

Examination or Test	Conformance Criteria		Requirement Paragraph	Inspection Method Reference
Functioning	3/	0-1	3.5.1.1	4.5.1.1
Endurance	2/	0-1	3.5.1.2	4.5.1.2, 4.5.1.3
Dovetail mount	1/	0-1	3.5.2	4.5.2
Drop test	3/	0-1	3.5.3	4.5.3
Spring, Retention, Magazine	1/	0-1	3.5.4.1	4.5.4.1
Spring, Retention, Belt	1/	0-1	3.5.4.2	4.5.4.2
Magazine component Interface	1/	0-1	3.5.5	4.5.5
Workmanship	50	0-1	3.7	4.5.7
Classification of Characteristics		0-1	3.2	4.4.2.1 to 4.4.2.7
Fastener Tight and not able to rotate or rattle by hand	50	0-1	3.2	Visual/Manual
Parts not properly Assembled	50	0-1	3.2	Visual

1/ The same 30 magazines shall be used for these tests; 10 at each temperature condition.
2/ A total of 3 magazines are to be tested; 1 at each temperature condition.
3/ The remaining 30 magazines shall be subjected to both the functioning test and the drop test only. Ten magazines shall be tested at each temperature.

4.4 Conformance verification.

4.4.1 Inspection lot formation. Inspection lot formation shall be in accordance with the lot formation requirement of MIL-STD-1916, paragraph 4.2. The maximum lot size shall be 10,000 magazines, or one month's production, whichever is smaller.

4.4.2 Classification of characteristics.

a. Conformance inspection shall include the characteristics of 4.4.2.1 through 4.4.2.7 and the tests of 4.5.

b. The definition of critical, Major and Minor characteristics shall be in accordance with MIL-STD-1916.

c. The acceptance criteria shall be in accordance with MIL-STD-1916 for the verification levels listed in 4.4.2.1 through 4.4.2.7.

d. All inspections for Government acceptance shall be performed at least 48 hours after manufacture of the item.

4.4.2.1 Alternative conformance provisions. The contractor may use contractor proposed alternative conformance acceptance provisions in accordance with MIL-STD-1916 in lieu of the verification provisions of this specification. Prior to applying the alternative conformance provisions, the contractor shall submit the proposed alternative conformance provisions for Government approval(see 6.4)

CONFORMANCE INSPECTION
CLASSIFICATION OF CHARACTERISTICS

Paragraph 4.4.2.1 Title: Magazine Assembly

Drawing Number: 12944203
Sheet 1 of 1
Next Higher Assembly: N/A

Classification	Examination or Test	Conformance Criteria	Requirement Paragraph	Inspection Method Reference
Critical	None Defined			
Major	Ambient Testing			
101	Functioning 1/	10 0-1	3.5.1.1	4.5.1.1
102	Endurance 1/ 2/	1 0-1	3.5.1.2	4.5.1.2, 4.5.1.3
103	Dovetail mount 1/	20 0-1	3.5.2	4.5.2
104	Drop test 1/ 2/	5 0-1	3.5.3	4.5.3
105	Spring, retention, magazine 1/	20 0-1	3.5.4.1	4.5.4.1
106	Spring, retention, belt	20 0-1	3.5.4.2	4.5.4.2
107	Magazine component interface 1/	20 0-1	3.5.5	4.5.5
108	All parts properly assembled	Level III	3.3	Visual
109	Fastener tight and not able to rotate or rattle by hand	Level III	3.3	Visual/ Manual
110	9.33 dimension	100%	3.3	SMTE
Minor				
201	Workmanship	Level II	3.7	Visual

1/ Acceptance is based on meeting the requirement in 3.2 and also the requirement paragraph specified.
2/ These will be tested first lot and every third lot thereafter.

CONFORMANCE INSPECTION
CLASSIFICATION OF CHARACTERISTICS

Paragraph 4.4.2.2 Title: Bag Assembly

Drawing Number: 12944204
Sheet 1 of 1
Next Higher Assembly: 12944203

Classification	Examination or Test	Conformance Criteria	Requirement Paragraph	Inspection Method Reference
Critical	None Defined			
Major				
101	Fastener not properly formed	Level III	3.3	Visual
102	Snap fasteners do not Snap closed to provide a secure closure and do not open freely 1/	Level III	3.3	Manual
103	Snap fasteners not properly seated	Level III	3.3	Visual/ Manual
104	Open seam or run-off > 13mm	Level III	3.3	SMTE
105	Skipped, broken or omitted stitching > 13mm in length	Level III	3.3	SMTE
106	More than 2 stitches under the minimum specified	Level III	3.3	SMTE
107	Slider does not move easily or close securely	Level III	3.3	Manual
108	Parts improperly assembled	Level III	3.3	Visual
Minor				
201	Absence of coating on inside of cloth	Level II	3.3	Visual/ Manual
202	Open seam ≤ 13mm	Level II	3.3	SMTE
203	Skipped, broken or omitted stitching, 13mm in length	Level II	3.3	SMTE
204	Workmanship	Level II	3.7	Visual

1/ The fasteners shall be snapped and unsnapped 2 times.

CONFORMANCE INSPECTION
CLASSIFICATION OF CHARACTERISTICS

Paragraph 4.4.2.3 Title: Spring, Retention, Magazine

Drawing Number: 12944208
Sheet 1 of 1
Next Higher Assembly: 12944203

Classification	Examination or Test	Conformance Criteria	Requirement Paragraph	Inspection Method Reference
Critical	None Defined			
Major				
101	32.64 dimension (Zone C-2)	Level III	3.3	SMTE
102	15.1 dimension (Zone B-2)	Level III	3.3	SMTE
103	4.86 dimension (Zone B-3)	Level III	3.3	SMTE
104	1.27 dimension (Zone C-3)	Level III	3.3	SMTE
105	Coating weight	5 0-1	3.3	4.5.10
106	Salt spray test	5 0-1	3.3	4.5.9
Minor				
201	1.52 dimension (Zone B-2)	Level II	3.3	SMTE

CONFORMANCE INSPECTION
CLASSIFICATION OF CHARACTERISTICS

Paragraph 4.4.2.4 Title: Clip

Drawing Number: 12944207
Sheet 1 of 1
Next Higher Assembly: 12944203

Classification	Examination or Test	Conformance Criteria	Requirement Paragraph	Inspection Method Reference
Critical	None Defined			
Major				
101	Salt spray test	5 0-1	3.3	4.5.9
102	Coating weight	5 0-1	3.3	4.5.10
103	31, 2x45 degree dimension	Level III	3.3	SMTE
Minor				
201	None defined			

CONFORMANCE INSPECTION
CLASSIFICATION OF CHARACTERISTICS

Paragraph 4.4.2.5 Title: Support

Drawing Number: 12944209
Sheet 1 of 1
Next Higher Assembly: 12944203

Classification	Examination or Test	Conformance Criteria	Requirement Paragraph	Inspection Method Reference
Critical	None Defined			
Major				
101	3.80 (D-4), 53.945 (E-3) dimension	Level III	3.3	SMTE
102	1.6 dimension (B-5)	Level III	3.3	SMTE
103	3.5 dimension (B-4)	Level III	3.3	SMTE
104	12.2 dimension (F-2)	Level III	3.3	SMTE
105	50.2 dimension (D-2)	Level III	3.3	SMTE
106	0.90 dimension (B-2)	Level III	3.3	SMTE
Minor				
201	Location of holes from edge, 12.9 (C-7)(2 places) 41.2(C-2)(2 places)	Level II	3.3	SMTE
202	Overall length, 140 (F-4)	Level II	3.3	SMTE
203	Location of holes, 70 (C-5) (2 places), 44.5 (C-4) (4 places)	Level II	3.3	SMTE
204	57.7 min. at centerline (B-2)	Level II	3.3	SMTE
205	33.7 dimension (D-6)	Level II	3.3	SMTE
206	23.5 dimension (D-6)	Level II	3.3	SMTE
207	54.8 dimension (D-5)	Level II	3.3	SMTE
208	5.1 diameter (10 holes) (C-3)	Level II	3.3	SMTE
209	12 dimension (B-5)	Level II	3.3	SMTE

CONFORMANCE INSPECTION
CLASSIFICATION OF CHARACTERISTICS

Paragraph 4.4.2.6 Title: Spring, Retention, Belt

Drawing Number: 12960862
Sheet 1 of 1
Next Higher Assembly: 12944203

Classification	Examination or Test	Conformance Criteria	Requirement Paragraph	Inspection Method Reference
Critical	None Defined			
Major				
101	11.48 and 13 dimension	Level III	3.3	SMTE
102	Coating weight	5 0-1	3.3	4.5.10
103	Salt spray test	5 0-1	3.3	4.5.9
Minor	None defined			

CONFORMANCE INSPECTION
CLASSIFICATION OF CHARACTERISTICS

Paragraph 4.4.2.7 Title: Fastener, Nylon

Drawing Number: 12977158
Sheet 1 of 1
Next Higher Assembly: 12944203

Classification	Examination or Test	Conformance Criteria	Requirement Paragraph	Inspection Method Reference
Critical	None Defined			
Major				
101	0.8 dimension	Level III	3.3	SMTE
102	0.3 dimension	Level III	3.3	SMTE
103	5.0 dimension	Level III	3.3	SMTE
104	2.5 dimension	Level III	3.3	SMTE
Minor	None defined			

4.5 Methods of verification.

4.5.1 Function firing.

4.5.1.1 Functioning. The magazine shall be loaded with a linked belt of 100 rounds of M855 ball, per MIL-C-63989, and M856 tracer, per MIL-C-63990, cartridges (4 ball to 1 tracer) linked with M27 links, per MIL-L-63532 (DWG. 11691287) and a feedstrap attached. The machine gun shall be fired in 5-7 round bursts at a rate of 85 rounds per minute. After firing between 60 and 80 cartridges, the weapon feed cover shall be released. The belt shall be checked to see if any rounds fell back into the magazine. To be acceptable no rounds shall have fallen back into the magazine. The firing shall then be resumed. Upon completion of the functioning test the magazine shall be detached from the weapon and the spring, retention, belt shall be checked that it is properly seated and not loose.

4.5.1.2 Endurance (ambient temperature). Each magazine shall be loaded with a linked belt of 100 Government approved M855 ball and M856 tracer cartridges (4 ball to 1 tracer) with Government approved M27 links and a feedstrap attached; and placed in a temperature chamber and conditioned to the temperature required in Section 3. Each magazine shall be subjected to fifty (50) firing cycles; The firing cycles shall be distributed (17, 17, 16) among 3 different weapons. The machine gun shall be fired in 5-7 round bursts at a rate of 85 rounds per minute. The weapon barrel shall be cooled to ambient following the firing of each 100 round group.

4.5.1.3 Endurance (temperature extremes). The magazine shall be loaded with a linked belt of 100 Government approved M855 ball and M856 tracer cartridges (4 ball to 1 tracer) with Government approved M27 links and a feedstrap attached. The magazine shall be temperature conditioned in accordance with 4.5.6. The magazine shall be subjected to five cycles. The magazine shall meet the test conditions of 4.5.6 for the entire test. The machine gun shall be fired in 5-7 round bursts at a rate of 85 rounds per minute.

4.5.2 Dovetail mount. A linked belt of 100 M857 or M232 inert cartridges shall be loaded into a magazine. The dovetail shall be lubricated generously with "Break Free CLP" lubricant, MIL-PRF-63460, and the container attached to the test fixture (see Figure 1). The dovetail shall be examined for proper fit (interface requirement). A 2.27 Kilogram weight minimum shall be dropped from a minimum height of 305 millimeters onto the magazine 30 millimeters away from the dovetail (directly opposite from the dovetail). The magazine must remain attached to the fixture for the test result to be acceptable. The test fixture (see Figure 1) shall use a weapon mount representing the minimum material (loosest) condition of drawing 9348215 feed box support

(see Figure 2).

4.5.3 Drop test. A linked belt of 100 M857 or M232 inert cartridges with feedstrap attached, shall be loaded into a magazine. The magazine shall be dropped onto solid concrete or steel three times; once on the dovetail side; once on the end near the mouth and once on the opposite end. Drop height shall be a minimum of 1.524 meters in all cases. Upon completion of the drop test the magazine shall be subjected to the functioning test of 4.5.1.1. The magazine must comply with the stated requirement for the test results to be acceptable.

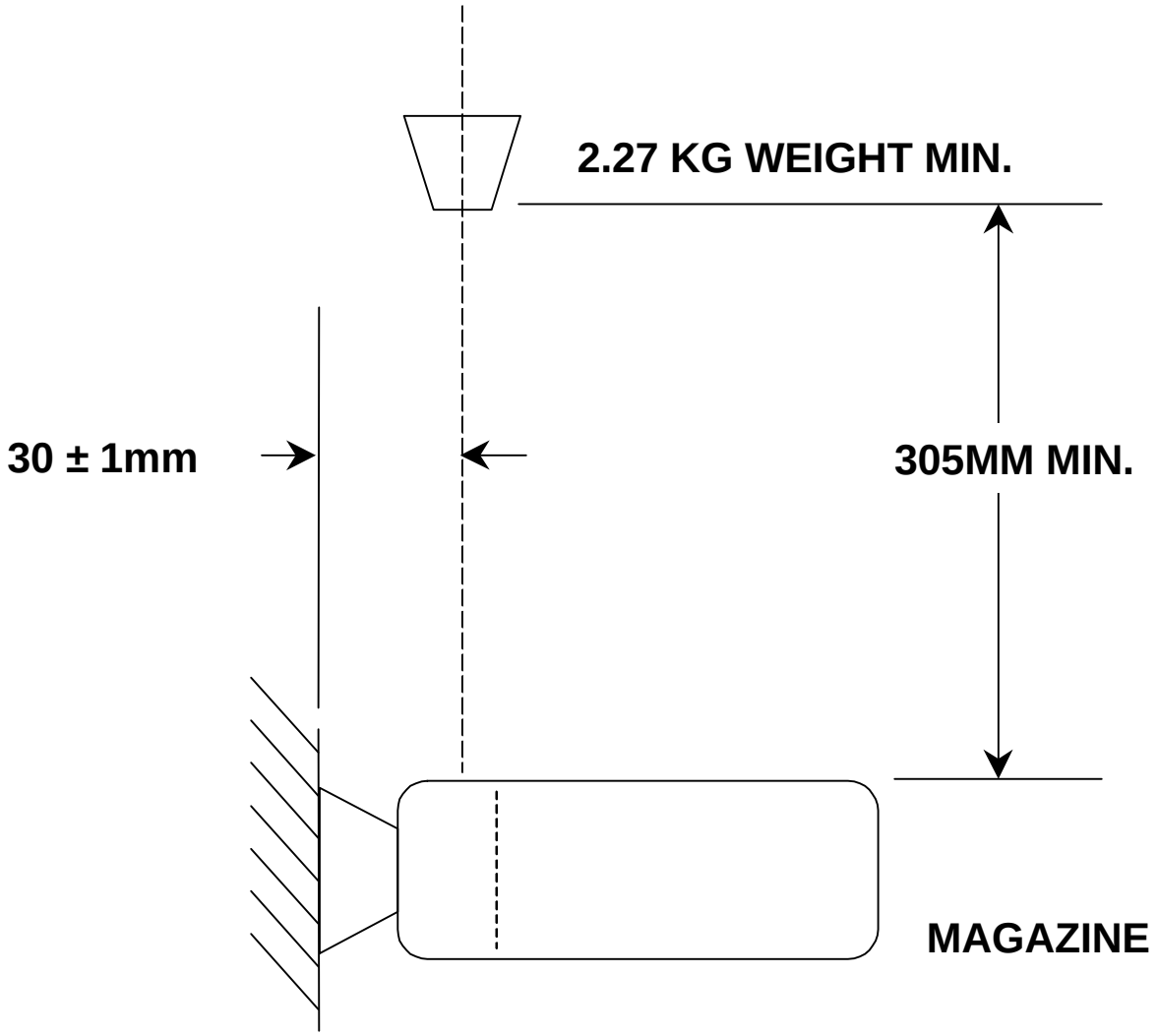

FIGURE 1. Dovetail Mount Test

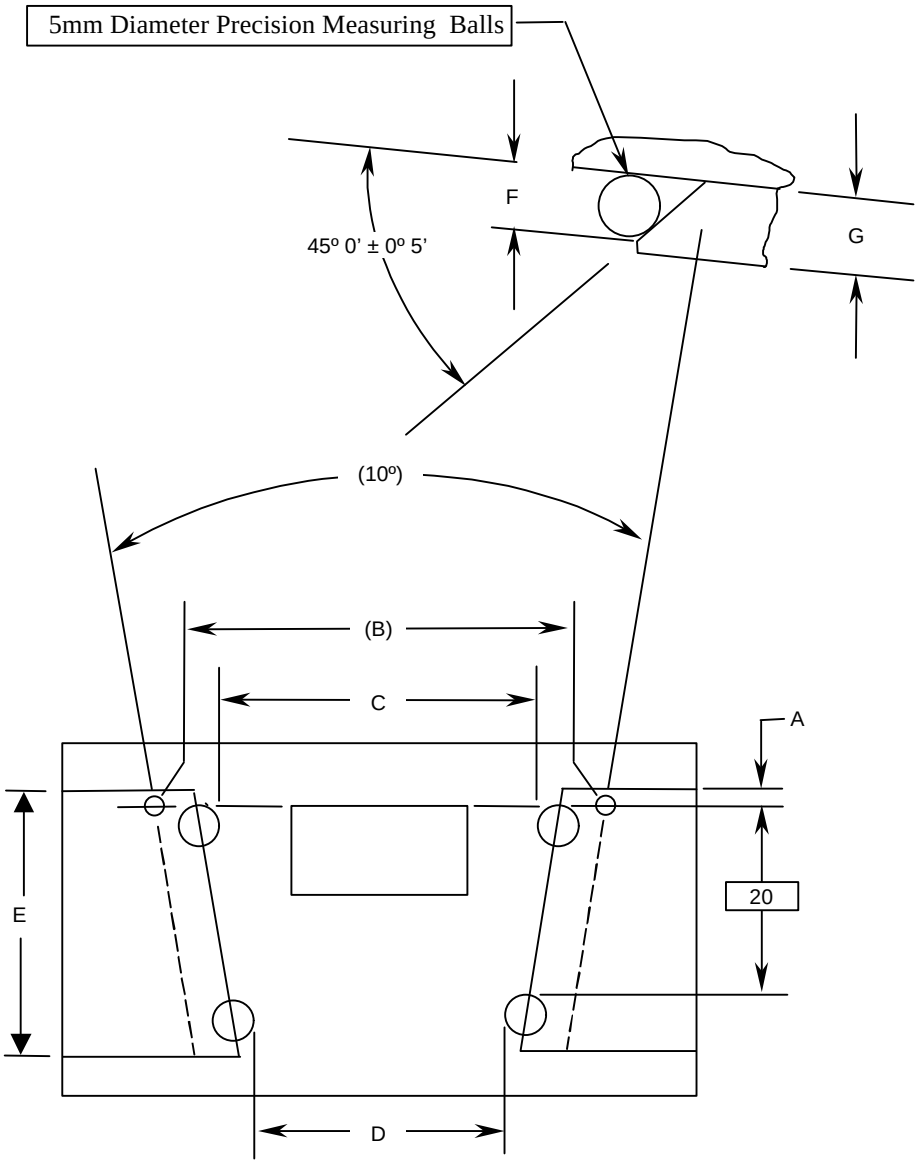

DOVETAIL INTERFACE REQUIREMENTS		
DIM	ASSEMBLEABILITY GAGE (TIGHTEST FIT)	IMPACT TEST FIXTURE (LOOSEST FIT)
A	2.05 + 0.015	1.75 + 0.015
B	53.803 REF	54.087 REF
C	36.248 – 0.015	36.532 – 0.015
D	32.748 – 0.015	33.032 – 0.015
E	28.9 MIN	27.9 MIN
F	6.28 MIN	5.19 MIN
G	7.56 MIN	6.38 MIN

Note: All dimensions are in millimeters

FIGURE 2. Dovetail Interface

4.5.4 Spring.

4.5.4.1 Spring, retention, magazine. A linked belt of 100-M857 or M232 inert cartridges shall be loaded into the magazine. The assembly shall be attached to the test fixture (see Figure 3) and the spring shall be examined for proper assembleability. The magazine shall be disassembled from the test fixture and while doing so, the spring shall be forced downward to the maximum extent of this travel. The dovetail and spring shall then be lubricated generously with "Break Free CLP" lubricant, MIL-PRF-63460, and attached to the test fixture again. The impact device shall be seated against the dovetail. A one-kilogram weight minimum shall be dropped onto the impact device from a minimum height of 305mm. The magazine must remain attached to the test fixture, the spring shall remain functional (assembleable and disassembleable) and, shall not be cracked in order for the test result to be acceptable. The test fixture (see Figure 3) shall use a weapon mount representing the minimum material (loosest) condition of drawing 9348215 feed box support (see Figure 2).

4.5.4.2 Spring, retention, belt. A linked belt of 100 cartridges with feedstrap attached, shall be loaded into a magazine. A Government approved force gage shall be attached to the end of the linked rounds. The number of rounds pulled out before the force is applied shall be between 12 and 16 rounds. The ammunition shall be either inert cartridges, M855, or 4/1 ratio of M855/M856 cartridges (live ammo). A force shall be applied in the direction indicated in Figure 4. The force required to pull the cartridges out of the magazine shall be measured.

4.5.5 Magazine component interface. The magazines shall be assembled to and disassembled from the ammunition belt, feedstrap and weapon mount. The use of tools is not permitted. The weapon mount used shall be a gage representing the maximum material (tightest) condition of drawing 9348215 Feed Box Support (see Figure 2). Inert ammunition shall be used. There shall be no damage to the magazine. Conformance to the requirement shall also be determined during spring and dovetail mount testing.

4.5.6 Temperature extremes. Tests and examinations shall be performed in the same manner as for ambient conditions with the following modifications.

a. All magazines, feedstraps and linked cartridges shall be temperature conditioned to the temperature specified in 3.6 as an assembly at the specified temperature for a minimum of two

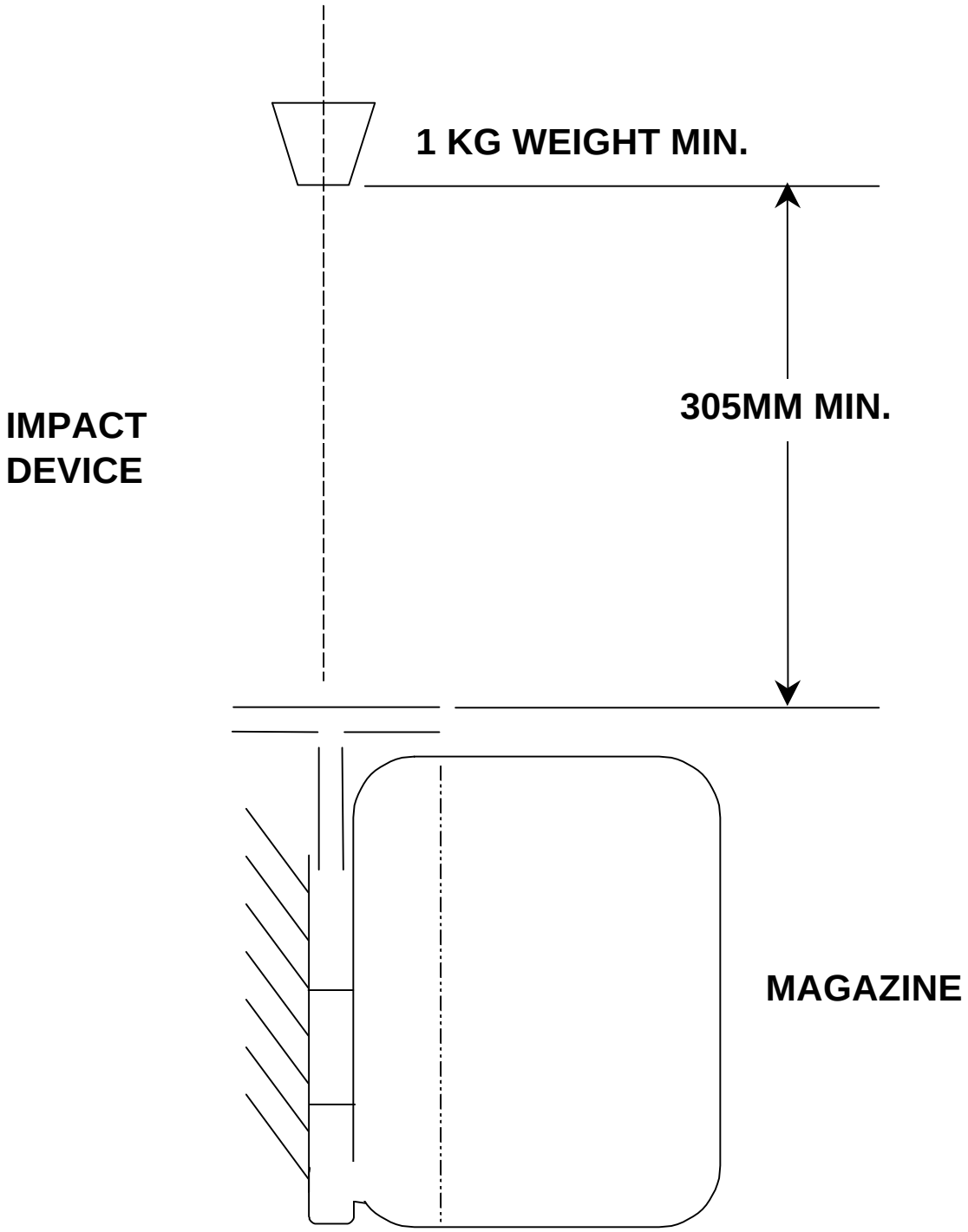

FIGURE 3. Spring, Retention, Magazine Test

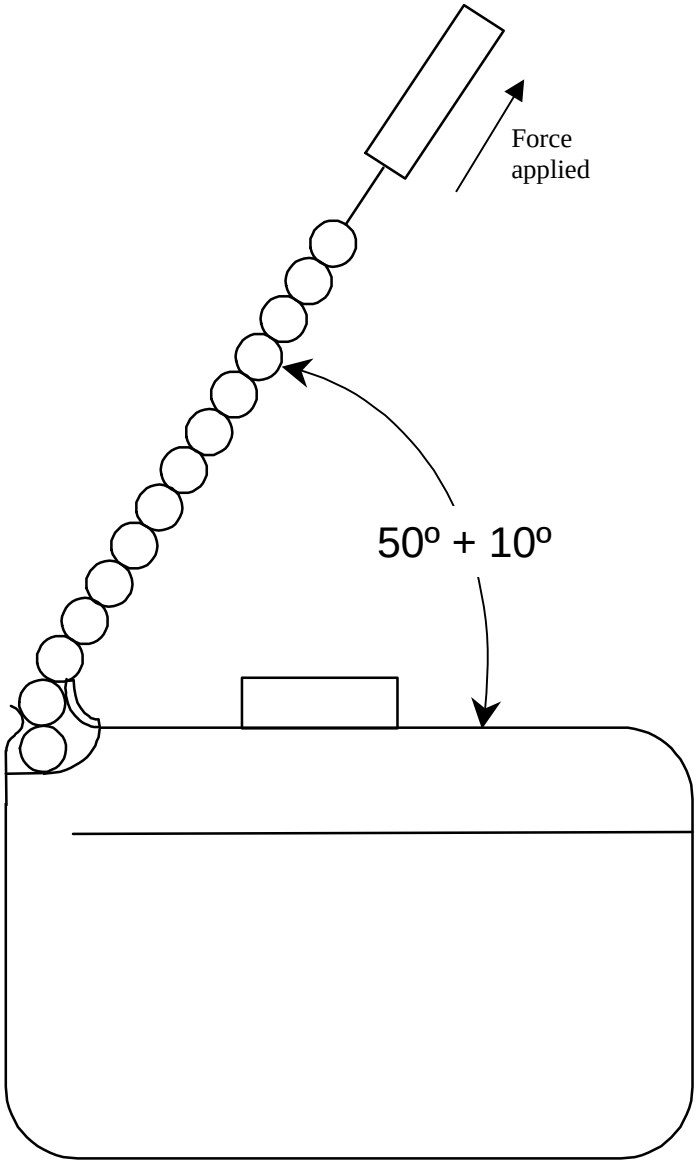

FIGURE 4. Spring, Retention, Belt Test

hours before the start of testing.

b. Testing shall be performed immediately upon removal of the conditioned items from the conditioning box. A delay of more than two minutes in the start of the test is unacceptable and shall require reconditioning for 30 minutes. Immediately after each test or examination, the item shall be returned to the conditioning box so that it will remain temperature conditioned for the next test to be performed.

c. After the initial two hours of temperature conditioning, items need only be reconditioned for 30 minutes between each test provided the conditioned item is returned to the conditioning chamber within 5 minutes. Otherwise two hours of conditioning is required.

4.5.7 Workmanship/visual examinations. The magazines shall be carefully examined visually for any defects that could affect the serviceability of the item.

4.5.8 Loading of magazines. With the zipper side of the container facing up, the double-loop end of the linked belt is placed through the zipper and then through the mouth to attach a feedstrap. The belt is then pulled taut. The linked belt is then loaded into the container in a zig zag fashion taking care that all rows are level to the bottom surface. Do not leave any voids at the end of each row. When the entire belt is loaded into the container, the zipper is closed and snapped.

4.5.9 Salt spray test. For each item to be tested, five (5) parts shall be selected from each lot. The test for the clip shall be performed as specified in DOD-P-16232 and ASTM B 117 without the supplemental oil. The test for the spring , retention, magazine and the spring , retention, belt shall be performed as specified in ASTM B 117 FOR 24 hours after the application of the dry film lubricant (MIL-L-23398). If any part shows evidence of corrosion, it shall be classified as defective and the entire lot shall be rejected.

4.5.10 Coating weight. For each item to be tested, five (5) samples or five test panels shall be selected from each lot. The test shall be performed as specified in DOD-P-16232 for the clip and TT-C-490 for the spring, retention, magazine and spring, retention, belt. If any sample does not meet the requirement of DOD-P-16232 for the clip and TT-C-490 for the spring, retention, magazine and spring, retention, belt; it shall be classified as defective and the lot shall be rejected.

4.5.11 Hardness. Five samples shall be selected from each heat treatment batch. The test shall be performed as specified in ASTM E 18. Each heat treatment batch shall remain segregated until completion of all required tests. If any sample fails to

comply with the specified hardness requirement, the sample shall be classified defective and the lot shall be rejected. A heat treatment batch shall be defined as parts that have been heat treated at the same time in the same furnace and quench bath for all phases of the heat treatment process.

4.6 Inspection equipment. The inspection equipment required to perform the inspections specified herein is identified in the "Inspection Method Reference" column of the Classification of Characteristics listings starting with 4.4.2.1. Designs which provide variable measurements instead of attributes data are preferred in order to facilitate the use of statistical process control. See 6.5 herein.

5. PACKAGING

5.1 Packaging. For acquisition purposes, the packaging requirements shall be as specified in the contract or order (see 6.2). When actual packaging of materiel is to be performed by DOD personnel, these personnel need to contact the responsible packaging activity to ascertain requisite packaging requirements. Packaging requirements are maintained by the Inventory Control Point's packaging activity within the Military Department or Defense Agency, or within the Military Department's System Command. Packaging data retrieval is available from the managing Military Department's or Defense Agency's automated packaging files, CD-ROM products, or by contacting the responsible packaging activity.

6. NOTES

(This section contains information of a general or explanatory nature that may be helpful, but is not mandatory.)

6.1 Intended use. Assemblies and components covered by this document are intended for use with the M249, 5.56mm machine gun and associated 5.56mm ammunition. The softpack magazines procured to this specification are military unique because there is no commercial market for softpack magazines that hold belted ammunition for automatic weapons.

6.2 Acquisition requirements. Acquisition documents should specify the following:

a. Title, number and date of this specification.

b. Packaging requirements(see 5.1)- Reference Drawing P12944203 on special packaging instructions.

c. Issue of DODISS to be cited in the solicitation, and

if required, the specific issue of individual documents referenced (see 2.2.1 and 2.2.2).

d. Requirements for first article(See 4.3 and 6.3)

e. Requirements for acceptance inspection equipment(AIE) designs(See 4.6 and 6.5).

f. Applicable national stock number.

g. Serialization requirements, if applicable.

h. Certification for each material and each part.

h. Certificate of conformance for each lot or shipment of product.

6.3 First article. When first article inspection is required, the contracting officer should provide specific guidance to offerors whether the item(s) should be a preproduction sample, a first article sample, a first production item, a sample selected from the first production items and the number of items to be tested as specified in 4.3. The contracting officer should also include specific instructions in acquisition documents regarding arrangements for examinations, approval of first article test results, and disposition of first articles. Invitations for bids should provide that the Government reserves the right to waive the requirement for samples for first article inspection to those bidders offering a product which has been previously acquired or tested by the Government, and that bidders offering such products, who wish to rely on such production or test, must furnish evidence with the bid that prior Government approval is presently appropriate for the pending contract. Bidders should not submit alternate bids unless specifically requested to do so in the solicitation.

6.3.1 Provisions for additional first article sample. In addition to the contract provision for submission of additional first article samples, a first article is required when either of the following occurs:

a. A new or reworked mold is to be used for the first time.

The batch of material (plastic) is changed to a batch that has not been used previously.

6.4 Submission of alternative conformance provisions. All contractor proposed alternative conformance provisions will be submitted to the Government for evaluation/approval as directed

by the contracting activity.

6.5 Submission of contractor inspection equipment designs for approval. Submit copies of designs as required to: Commander, U.S. Army ARDEC, ATTN: AMSTA-AR-QAC-C, Picatinny Arsenal, NJ 07806-5000.

6.6 Dimensional settlement of plastic. Dimensional settlement of plastic is required before inspection.

6.7 Subject term (key word) listing.

Assault Pack
Dovetail
Pouch
Spring
Clip

6.8 Changes from previous issue. Marginal notations are not used in this revision to identify changes with respect to the previous issue due to the extensiveness of the changes.

Custodian:
Army-AR

Preparing activity:
Army-AR

(Project 1005-0843)

STANDARDIZATION DOCUMENT IMPROVEMENT PROPOSAL

INSTRUCTIONS

1. The preparing activity must complete blocks 1, 2, 3, and 8. In block 1, both the document number and revision letter should be given.
2. The submitter of this form must complete blocks 4, 5, 6, and 7, and send to preparing activity.
3. The preparing activity must provide a reply within 30 days from receipt of the form.

NOTE: This form may not be used to request copies of documents, nor to request waivers, or clarification of requirements on current contracts. Comments submitted on this form do not constitute or imply authorization to waive any portion of the referenced documents(s) or to amend contractual requirements.

I RECOMMEND A CHANGE:	1. DOCUMENT NUMBER	2. DOCUMENT DATE (YYYYMMDD)
	MIL-DTL-71026A (AR)	06 JUNE 2000

DOCUMENT TITLE MAGAZINE, CARTRIDGE, SOFT PACK, REUSABLE, M249, 5.5.6MM MACHINE GUN (METRIC) GENERAL SPECIFICATION FOR

4. NATURE OF CHANGE (*Identify paragraph number and include proposed rewrite, if possible. Attach extra sheets as needed.*)

5. REASON FOR RECOMMENDATION

6. SUBMITTER

a. NAME (*Last, First, Middle Initial*)	b. ORGANIZATION	
c. ADDRESS (*Include Zip Code*)	d. TELEPHONE (*Include Area Code*) (1) Commercial (2) DSN (*if applicable*)	7. DATE SUBMITTED (*YYYYMMDD*)

8. PREPARING ACTIVITY

a. NAME	b. TELEPHONE (*Include Area Code*)	
U.S. Army TACOM-ARDEC Standardization Team	(1) Commercial (973) 724-5822	(2) DSN 880-5822
c. ADDRESS (*Include Zip Code*) Attn; AMSTA-AR-QAW-E Picatinny Arsenal, NJ 07806-5000	IF YOU DO NOT RECEIVE A REPLY WITHIN 45 DAYS, CONTACT: Defense Standardization Program Office (DLSC-LM) 8725 John J. Kingman Road, Suite 2533 Fort Belvoir, Virginia 22060-6221 Telephone (703) 767-6888 DSN 427-6888	