Downloaded from http://www.everyspec.com

INCH-POUND

MIL-DTL-7034F
1 April 2005
SUPERSEDING
MIL-DTL-7034E
5 May 1998

DETAIL SPECIFICATION

PULLEYS, GROOVE, ANTIFRICTION BEARING, GREASE LUBRICATED, AIRCRAFT, GENERAL SPECIFICATION FOR

This specification is approved for use by all Departments and Agencies of the Department of Defense.

1. SCOPE

1.1 Scope. This specification covers requirements for single groove pulleys with antifriction bearings.

1.2 Classification. Pulleys are classified as follows:

Type I - Nonmetallic sheave
Type II - Metallic sheave

2. APPLICABLE DOCUMENTS

2.1 General. The documents listed in this section are specified in sections 3 and 4 of this specification. This section does not include documents cited in other sections of this specification or recommended for additional information or as examples. While every effort has been made to ensure the completeness of this list, document users are cautioned that they must meet all specified requirements of the documents cited in sections 3 and 4 of this specification, whether or not they are listed.

Comments, suggestions, or questions on this document should be addressed to Defense Supply Center Richmond, ATTN: DSCR-VEB, 8000 Jefferson Davis Highway, Richmond, VA 23297-5616 or emailed to STDZMGT@dla.mil. Since contact information can change, you may want to verify the currency of this address information using the ASSIST database at http://assist.daps.dla.mil/.

AMSC N/A FSC 1640

Downloaded from http://www.everyspec.com

2.2 Government documents.

2.2.1 Specifications and standards. The following specifications and standard form a part of this document to the extent specified herein. Unless otherwise specified, the issues of these documents are those cited in the solicitation or contract.

FEDERAL SPECIFICATION

TT-P-1757	-	Primer Coating, Alkyd Base, One Component.

DEPARTMENT OF DEFENSE SPECIFICATIONS

MIL-DTL-7034/1	-	Pulley, Groove, Secondary Control, Aircraft.
MIL-DTL-7034/2	-	Pulley, Groove, Flight Control, Aircraft.
MIL-DTL-7034/3	-	Pulley, Groove, Heavy Duty, Control, Aircraft.
MIL-DTL-7034/4	-	Pulley, Control, Anti-friction Bearing, Aircraft.
MIL-A-8625	-	Anodic Coatings for Aluminum and Aluminum Alloys.
MIL-PRF-23827	-	Grease, Aircraft and Instrument, Gear and Actuator Screw, NATO Code Number G-354.
MIL-PRF-81322	-	Grease, Aircraft, General Purpose, Wide Temperature Range.
MIL-DTL-83420	-	Wire Rope, Flexible, for Aircraft Control, General Specification for.

DEPARTMENT OF DEFENSE STANDARDS

MIL-STD-130	-	Identification Marking of U.S. Military Property.
MIL-STD-810	-	Environmental Engineering Considerations and Laboratory Tests.

(Copies of these documents are available online at http://assist.daps.dla.mil/ or from the Standardization Documents Order Desk, 700 Robbins Avenue, Building 4D, Philadelphia, PA 19111-5094.)

2.3 Non-government publications. The following documents form a part of this document to the extent specified herein. Unless otherwise specified, the issues of these documents are those cited in the solicitation or contract.

AMERICAN SOCIETY OF MECHANICAL ENGINEERS (ASME)

ASME B46.1	-	Surface Texture (Surface Roughness, Waviness, and Lay).

(Copies of this document are available from http://www.asme.org/ or from American Society of Mechanical Engineers, Three Park Avenue, New York, NY 10016-5990.)

Downloaded from http://www.everyspec.com

AMERICAN SOCIETY FOR QUALITY (ASQ)

ASQ Z1.4	-	Sampling Procedures and Tables for Inspection by Attributes.

(Copies of this document are available from http://www.asq.org/ or from American Society for Quality, 600 North Plankinton Avenue, Milwaukee, WI 53203.)

SAE INTERNATIONAL

SAE AMS-QQ-A-225/6	-	Aluminum Alloy 2024, Bar, Rod and Wire, Rolled, Drawn or Cold Finished.
SAE AMS 4037	-	Aluminum Alloy Sheet and Plate 4.4Cu -1.5Mg - 0.60Mn (2024; -T3 Flat Sheet, -T351 Plate) Solution Heat Treated.
SAE AS7949	-	Bearings, Ball, Airframe, Antifriction, General Standard for.
SAE AS21443	-	Bearing, Ball, Airframe, Anti-Friction, Pulley.
SAE AS27640	-	Bearing, Ball, Airframe, Anti-Friction, Heavy Duty.

(Copies of these documents are available from http://www.sae.org/ or from SAE International, 400 Commonwealth Drive, Warrendale, PA 15096-0001.)

2.4 Order of precedence. In the event of a conflict between the text of this document and the references cited herein (except for related specification sheets), the text of this document takes precedence. Nothing in this document, however, supersedes applicable laws and regulations unless a specific exemption has been obtained.

3. REQUIREMENTS

3.1 Specification sheets. The individual item requirements shall be as specified herein and in accordance with the applicable specification sheet. In the event of any conflict between the requirements of this specification and the specification sheet, the latter shall govern.

3.2 Qualification. Pulleys furnished under this specification shall be products which are authorized by the qualifying activity for listing on the applicable qualified products list before contract award (see 4.3 and 6.3).

3.3 Materials.

3.3.1 Sheave material. Sheave material requires qualifying activity approval.

3.3.1.1 Nonmetallic sheave, type I. Nonmetallic pulley sheaves shall be manufactured from fabric, or equivalent reinforcing material impregnated with a phenolic condensation substance, which will produce a finished product with uniform strength. Nonmetallic pulley sheaves shall be securely bonded to a metallic bearing retention sleeve and bored to receive the bearing.

Downloaded from http://www.everyspec.com

3.3.1.2 Metallic sheave, type II. Metallic pulley sheaves shall be manufactured from aluminum alloy conforming to SAE AMS-QQ-A-225/6 temper T351 or SAE AMS 4037 temper T351.

3.3.2 Bearings. Bearings shall conform to SAE AS7949 and SAE AS21443 or SAE AS27640. Only factory new ball bearings shall be used.

3.3.2.1 Finish, metallic sheaves, type II. Metallic pulley sheaves shall be anodized in accordance with MIL-A-8625 type II, before installing the bearing.

3.3.2.2 Aluminum bore surface, types I and II. Aluminum bore surfaces of types I and II sheaves shall be coated with zinc-chromate primer conforming to TT-P-1757 before installing the bearing. The bearing shall be installed while the primer is still wet.

3.4 Design.

3.4.1 Lubrication. The bearings shall be lubricated in accordance with SAE AS7949.

3.4.2 Bearing closures. The bearing shall contain seals as specified in SAE AS7949 and SAE AS21443, or SAE AS27640.

3.4.3 Non-afterglow, type I. When tested in accordance with 4.5.11, the pulley shall show no afterglow after ignition and flame extinction. The non-afterglow additive shall not bleed from the sheave material.

3.4.4 Temperature. When tested in accordance with 4.5.2, the pulley assembly shall show no cracks, splits, or warpage.

3.4.5 Corrosion. When tested in accordance with 4.5.3, the type I sheave material shall show no evidence that it will corrode tin or zinc coated carbon steel cable.

3.4.6 Fungus. When tested in accordance with 4.5.4, the type I sheave material shall not be adversely affected by fungus growth.

3.4.7 Physical characteristics. Physical characteristics shall be as specified on MIL-DTL-7034/1, MIL-DTL-7034/2, MIL-DTL-7034/3, or MIL-DTL-7034/4.

3.4.8 Surface roughness. The surface roughness shall not exceed a 160 roughness height rating for metallic parts and a 500 roughness height rating for phenolic parts, in accordance with ASME B46.1.

Downloaded from http://www.everyspec.com

3.5 Performance.

3.5.1 Eccentricity. When tested as specified in 4.5.5, eccentricity shall not exceed the values specified. The eccentricity of the periphery of the groove and groove flanges with respect to the longitudinal axis of the bearing shall be defined as the difference between the maximum and minimum radii. Eccentricity measurements shall be taken in such a manner that the bearing clearance is not included as eccentricity.

3.5.2 Wobble clearance. When the pulley is tested in accordance with 4.5.7, the clearance between the pulley and a plane which is perpendicular to the bearing axis, and which contacts the end of the bearing inner race, shall be not less than the amount specified.

3.5.3 Strength under static loads.

3.5.3.1 Bonding strength. When tested as specified in 4.5.8, the pulleys shall be capable of withstanding the bonding strength proof loads without failure of the bond between the pulley sheave and bearing. Loosening, separating, or shifting of the bearing, shall be evidence of bond failure.

3.5.3.2 Flange strength. When tested as specified in 4.5.9, the pulleys shall be capable of withstanding the specified flange strength loads without failure. Checking or shearing of the flange shall be evidence of failure.

3.5.3.3 Sheave strength. When tested as specified in 4.5.10, the pulley shall be capable of withstanding the sheave strength loads specified without buckling, splitting, or other types of failure of the sheave.

3.5.4 Endurance. When tested in accordance with 4.5.6, types I and II pulleys shall be capable of enduring the conditions specified without reducing the groove diameter by an amount greater that the wear factor specified.

3.5.5 Pulley structure. The pulley structure shall not have spokes or holes in the sides.

3.6 Identification.

3.6.1 Pulley. The part number shall be legibly and permanently marked on the pulley in accordance with MIL-STD-130. Type I and type II pulleys shall also be marked with the assembly lot designation, adequate for traceability. Metal stamping is prohibited. The identification shall be:

a. Manufacturer's name or trademark.
b. Specification sheet part number.

3.6.2 Bearing. The ball bearing shall be marked in accordance with SAE AS7949. The bearing manufacturer's name and the type designation shall be discernible after installed in the pulley sheave.

Downloaded from http://www.everyspec.com

3.7 Workmanship. Pulleys shall be free from cracks, splits, burrs, machine tool marks, and other defects which would affect their performance.

4. VERIFICATION

4.1 Classification of inspection. The inspection requirements specified herein are classified as follows:

a. Qualification inspection (see 4.3).
b. Conformance inspection (see 4.4).

4.2 Inspection and tests. The inspection and tests specified herein are intended to verify that the items produced meet or exceed the performance requirements specified.

4.3 Qualification inspection.

4.3.1 Samples. Twenty-five samples of each size of types I and II pulleys offered for qualification shall be submitted to the qualifying activity (see 6.3). Complete information on dimensions, construction, materials, and heat treatment, shall be furnished for each size and type pulley submitted.

4.3.1.1 Number of samples subjected to qualification tests. The number of samples to be subjected to the qualification tests, and the order in which the tests are to be performed, shall be in accordance with table I. To optimize the use of test samples, non-destructive testing shall precede destructive testing.

4.3.2 Inspection. The qualification inspections shall consist of all the tests listed in table II in the order shown, on the samples submitted in accordance with 4.3.1.

4.3.3 Maintenance of qualification. To maintain qualification, the manufacturer must be able to demonstrate that the company still has the capabilities and facilities necessary to produce the items. The qualifying activity will request appropriate documentation demonstrating this capability at the time qualification retention is required (at least 2-year intervals).

4.4 Conformance inspection. Conformance inspection for types I and II pulleys shall consist of an individual test and a sampling plan.

4.4.1 Individual test. The individual test shall consist of the following:

a. Examination of product (4.5.1).

4.4.2 Sampling plan.

4.4.2.1 Samples. Sample pulleys shall be selected in accordance with ASQ Z1.4, inspection level S-3, acceptance number zero, for all tests specified in 4.4.3, except examination of product. The number of allowable defects shall be as specified in the contract (see 6.2).

Downloaded from http://www.everyspec.com

4.4.2.2 Lot. The lot definition, formation, and size shall be in accordance with ASQ Z1.4.

4.4.3 Tests performed on samples. The following tests shall be performed on the sample pulleys:

a. Bonding strength (4.5.8).
b. Flange strength (4.5.9).
c. Sheave strength (4.5.10).
d. Non-afterglow - type I (4.5.11).

4.5 Test methods.

4.5.1 Examination of product. Each sample pulley shall be carefully examined to determine conformance to this specification and the applicable specification sheet with respect to dimensions, tolerance, weight, finish, identification of product, and workmanship.

4.5.2 Temperature. The pulley assembly shall be subjected to a temperature of -65 °F for 48 hours and to a temperature of 250 °F for 48 hours. Any pulley assembly showing cracks, splits, or warpage as a result of this test shall be cause for rejection.

4.5.3 Corrosion. Type I nonmetallic pulleys shall be exposed to 95 percent relative humidity at 100 °F for 48 hours. The pulleys shall be removed from the humidity chamber and the pulley surfaces tested for the presence of efflorescent chloride salts by placing a drop of 20 percent nitric acid and a drop of 3.0 percent silver nitrate solution on the same spot of the humidified pulley. Formation of insoluble white silver chloride salts is indication that the sheave material is corrosive to tin or zinc coated carbon steel cable, and shall constitute failure of the pulley.

4.5.4 Fungus growth. Type I nonmetallic pulleys shall be tested in accordance with MIL-STD-810, Method 508.1. Samples shall be considered to have failed if they support fungus in an amount that prevents or impairs flange strength or sheave strength testing.

4.5.5 Eccentricity. The inner bearing race shall be securely held in a fixture as shown in figure 1. When the pulley is rotated through one revolution, the eccentricity tolerance measured shall not exceed the values specified in table III. Eccentricity measurements shall be taken in such a manner that the bearing clearance is not included as eccentricity.

4.5.6 Endurance. The general arrangement of the testing machine shall be as shown in figure 2. The wire rope employed shall conform to MIL-DTL-83420, and shall be of the size specified in table IV for the pulley being tested. The machine shall be operated under the applicable conditions of table IV. Atmospheric temperature shall be not less than 50 °F. Cable temperature shall not exceed 212 °F.

Downloaded from http://www.everyspec.com

4.5.6.1 Failure under endurance test. A pulley shall be considered to have failed when any of the following conditions develop, either during the test or at the conclusion of the test:

a. The root diameter is reduced more than 1/32-inch as specified in table IV.
b. The pulley fails when subjected to the wobble clearance and bearing strength test as specified in 4.5.7.
c. The pulley fails when subjected to the bonding strength test as specified in 4.5.8.

4.5.7 Wobble clearance and bearing strength. The inner bearing race shall be secured to a plane surface and the limit load applied with 180 degrees cable wrap and 2 degrees pulloff as shown on figure 3. The minimum clearance between the plane surface and the pulley flange, measured at the point of load application, shall be determined by placing the load at various positions about the complete circumference of the pulley as shown on table V. The test shall be repeated with the pulley inverted.

4.5.8 Bonding strength. The pulley shall be supported in a fixture as shown on figure 4. The bearing shall be unsupported and free to be pushed out of the sheave in case of failure. The load specified in table VI for the particular size pulley under test shall be applied gradually to the inner race of the bearing perpendicular to the plane of the pulley. The maximum load shall be maintained for not less than 10 seconds. The test shall be repeated with the pulley inverted.

4.5.9 Flange strength. The pulley shall be clamped in a fixture as shown on figure 5, in such a manner as to hold the sheave rigidly. The diameter of the gage disk shall be as specified on figure 5. The load specified in table VII for the particular size pulley under test shall be applied to the inside of the flange perpendicular to the plane of the pulley, through the loading block in line with the root diameter. Both flanges shall be tested with the load being applied 90 degrees apart. The maximum load shall be maintained for not less than 10 seconds.

4.5.10 Sheave strength. The pulley shall be mounted in the fixture as shown on figure 6 in such a manner as to permit rotation. The load specified in table VIII for the particular size pulley under test shall be applied gradually by means of a pressure plate of the size specified in table VIII. The maximum load shall be maintained for not less than 10 seconds. During the test, the pulley shall receive no side support from the fixture. Failure of bearing under this test shall not be cause for rejection of the pulley.

4.5.11 Non-afterglow, type I. Type I nonmetallic pulleys shall be clamped in a support, and a Bunsen burner or an alcohol lamp with blue flame 0.5 to 0.75-inch high, shall be placed under the sheave so the flame tip contacts the edge of one flange. After 30 seconds, the flame shall be removed. After removal of the flame, sufficient airblast to extinguish the blaze from 1 to 2 seconds shall be applied. Eight to 10 seconds later the airblast shall again be applied. There shall be no afterglow or bleeding of the non-afterglow additive. The test shall be repeated on the same area. There shall be no afterglow or bleeding of the non-afterglow additive.

Downloaded from http://www.everyspec.com

5. PACKAGING

5.1 Packaging. For acquisition purposes, the packaging requirements shall be as specified in the contract or order (see 6.2). When packaging of material is to be performed by DoD or in-house contractor personnel, these personnel need to contact the responsible packaging activity to ascertain packaging requirements. Packaging requirements are maintained by the Inventory Control Point's packaging activities within the Military Service or Defense Agency, or within the military service's system commands. Packaging data retrieval is available from the managing Military Department's or Defense Agency's automated packaging files, CD-ROM products, or by contacting the responsible packaging activity.

6. NOTES

(This section contains information of a general or explanatory nature that may be helpful, but is not mandatory.)

6.1 Intended use. These pulleys are used in aircraft applications, such as, control systems and brake installations. These military unique parts of aircraft control and brake systems require interoperability and compatibility with associated components and equipment. This interoperability and compatibility has been assured through the strict adherence to military requirements which contain substantial detail. The detail assures item standardization and compatibility through specific dimensions and tolerances in the MIL-DTL-7034 specification sheets and material control requirements in this specification. The qualification process ensures these items will meet the flame resistance, and -65 ºF to 250 ºF, temperature requirements, and perform as specified in the environments to which they may be subjected. Users and prime equipment manufacturers depend on these detailed technical requirements to ensure delivered product meets the interoperablility and compatibility requirements.

6.2 Acquisition requirements. Acquisition documents should specify the following:

a. Title, number, and date of the specification.
b. Type pulley and quantities required.
c. Number of allowable defects (see 4.4.2.1).
d. Packaging requirements (see 5.1).

6.3 Qualification. With respect to products requiring qualification, awards will be made only for products that are, at the time of award of contract, qualified for inclusion in QPL-7034 whether or not such products have actually been so listed by that date. The attention of contractors is called to these requirements, and manufacturers are urged to arrange to have the products that they propose to offer to the Federal Government tested for qualification in order that they may be eligible to be awarded contracts or orders for the products covered by this specification. Information pertaining to qualification of products may be obtained from Defense Supply Center Richmond, ATTN: DSCR-VEB, 8000 Jefferson Davis Highway, Richmond, VA 23297-5616.

Downloaded from http://www.everyspec.com

6.4 MS cross-reference. Former military standard (MS) number cross-reference to MIL-DTL-7034 specification sheet number:

MIL-DTL-7034/1	MS20219
MIL-DTL-7034/2	MS20220
MIL-DTL-7034/3	MS20221
MIL-DTL-7034/4	MS24566

The military standard (MS) part numbers have been retained in the specification sheets.

6.5 Subject term (key word) listing.

Eccentricity
Non-afterglow
Phenolic
Sheave
Wobble clearance

6.6 Changes from previous issue. The margins of this specification are marked with vertical lines to indicate where changes from the previous issue were made. This was done as a convenience only and the Government assumes no liability whatsoever for any inaccuracies in these notations. Bidders and contractors are cautioned to evaluate the requirements of this document based on the entire content irrespective of the marginal notations and relationship to the last previous issue.

Downloaded from http://www.everyspec.com

TABLE I. Number of samples subjected to qualification tests.

Inspection	Test paragraph	Number of samples subjected to qualification tests
Examination of product	4.5.1	25
Eccentricity	4.5.5	10
Wobble clearance and bearing strength	4.5.7	10
Endurance	4.5.6	5
Bonding strength	4.5.8	5
Flange strength	4.5.9	5
Sheave strength	4.5.10	5
Temperature	4.5.2	5
Corrosion	4.5.3	5
Fungus growth	4.5.4	5
Non-afterglow, type I	4.5.11	3

TABLE II. Qualification inspection and conformance inspection.

Inspection	Requirement paragraph	Qualification inspection paragraph	Conformance inspection paragraph
Examination of product	3.6 and 3.7	4.5.1	4.5.1
Eccentricity	3.5.1	4.5.5	-
Wobble clearance and bearing strength	3.5.2	4.5.7	-
Endurance	3.5.4	4.5.6	-
Bonding strength	3.5.3.1	4.5.8	4.5.8
Flange strength	3.5.3.2	4.5.9	4.5.9
Sheave strength	3.5.3.3	4.5.10	4.5.10
Temperature	3.4.4	4.5.2	-
Corrosion	3.4.5	4.5.3	-
Fungus growth	3.4.6	4.5.4	-
Non-afterglow, type I	3.4.3	4.5.11	4.5.11

Downloaded from http://www.everyspec.com

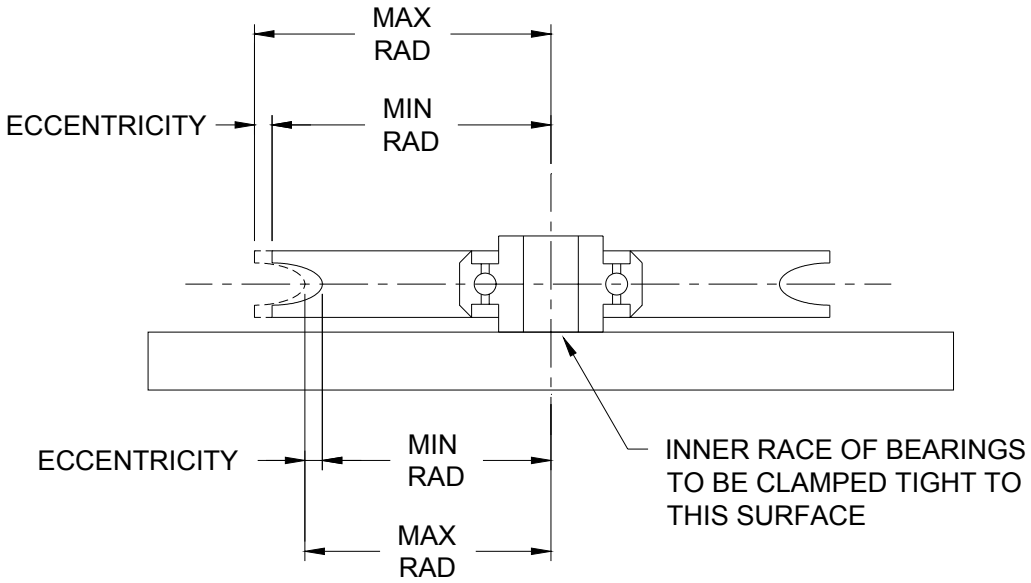

FIGURE 1. Eccentricity test setup.

TABLE III. Eccentricity tolerances.

Part number		Eccentricity max (inches)
MS20219-1,	-A1	0.006
-2,	-A2	0.006
-3,	-A3	0.006
-4,	-A4	0.007
-5,	-A5	0.007
MS20220-1,	-A1	0.007
-2,	-A2	0.007
-3,	-A3	0.010
-4,	-A4	0.010
MS20221 1/	-A1	0.007
-2,	-A2	0.007
-3,	-A3	0.010
MS24566-1B		0.006
-2B		0.006
-3B		0.006
-4B		0.010
-5B		0.010
-6B		0.010

1/ Part number MS20221-1 deleted.

Downloaded from http://www.everyspec.com

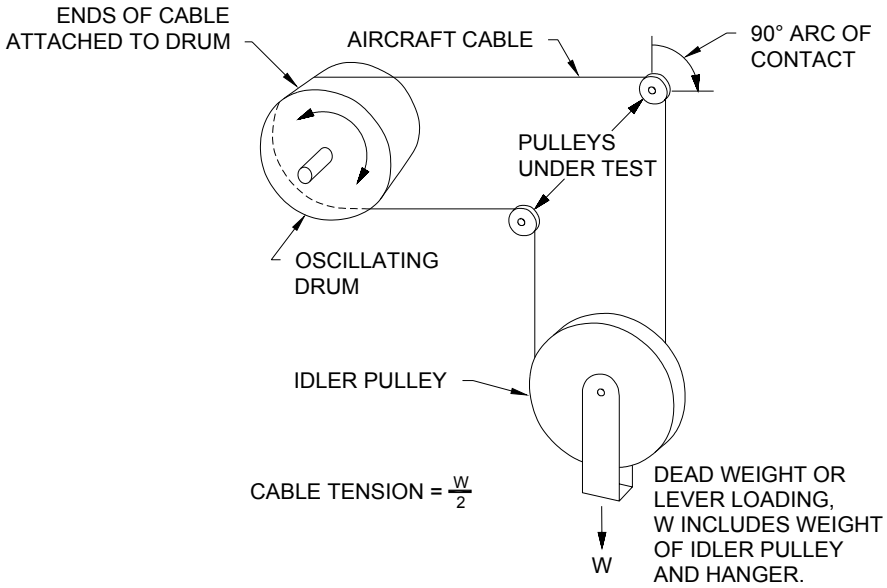

FIGURE 2. Endurance test setup.

TABLE IV. Endurance test tolerances.

Part number		Cable dia (inch)	Cable travel (inch)	Cable tension (lbs)	Total reversals 1/	Cable wrap (°)	Wear max (inch)
MS20219-1,	-A1	3/32	20	120	7,850	90	1/32
-2,	-A2	3/32	20	120	11,250	90	1/32
-3,	-A3	3/32	20	120	11,250	90	1/32
-4,	-A4	3/32	20	230	18,100	90	1/32
-5,	-A5	3/32	20	230	18,100	90	1/32
MS20220-1,	-A1	3/16	20	125	9,800	90	1/32
-2,	-A2	3/16	20	420	20,000	90	1/32
-3,	-A3	3/16	20	625	29,200	90	1/32
-4,	-A4	3/16	20	625	40,000	90	1/32
MS20221 2/	-A1	1/4	20	700	15,650	90	1/32
-2,	-A2	1/4	20	1225	27,400	90	1/32
-3,	-A3	1/4	20	1750	40,000	90	1/32
MS24566-1B		3/32	20	75	7,650	90	1/32
-2B		3/32	20	125	17,400	90	1/32
-3B		3/16	20	150	11,850	90	1/32
-4B		3/16	20	300	23,600	90	1/32
-5B		1/4	20	750	34,300	90	1/32
-6B		1/4	20	1000	42,100	90	1/32

1/ The number of reversals indicated is equivalent to 50,000 revolutions.
2/ Part number MS20221-1 deleted.

Downloaded from http://www.everyspec.com

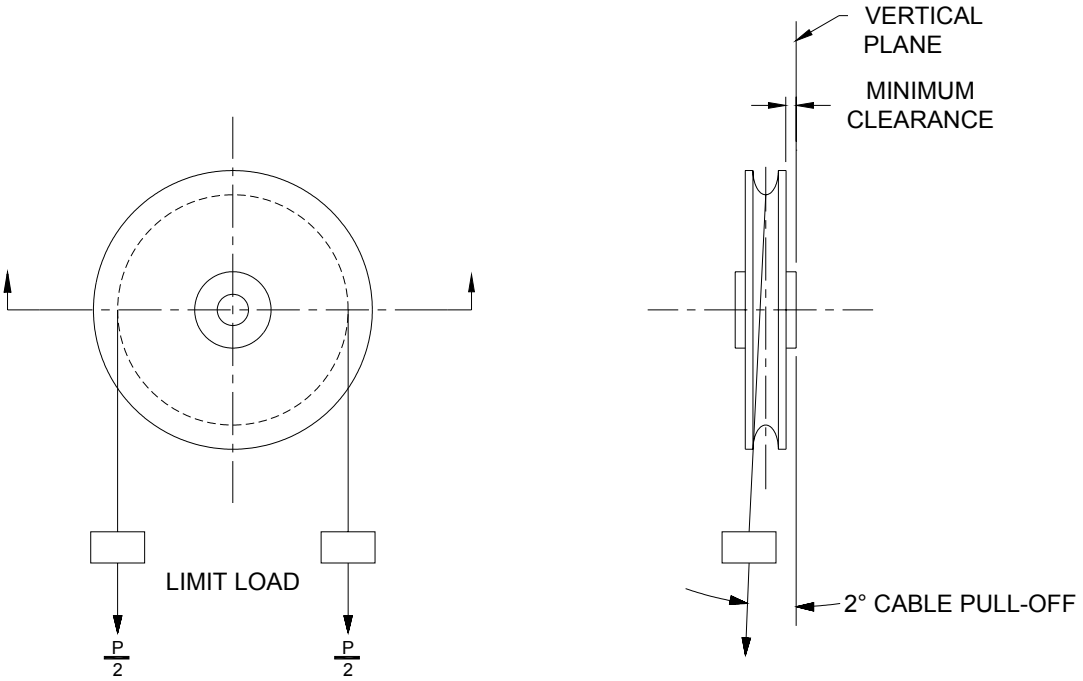

FIGURE 3. Wobble clearance test setup.

TABLE V. Wobble clearance tolerance.

Part number		P pulley limit load (lbs)	Wobble clearance (inch)
MS20219-1,	-A1	480	0.005
-2,	-A2	480	0.005
-3,	-A3	480	0.005
-4,	-A4	920	0.005
-5,	-A5	920	0.005
MS20220-1,	-A1	500	0.005
-2,	-A2	1680	0.005
-3,	-A3	2500	0.005
-4,	-A4	2500	0.005
MS20221 1/	-A1	2800	0.005
-2,	-A2	4900	0.005
-3,	-A3	7000	0.005
MS24566-1B		300	0.002
-2B		500	0.002
-3B		600	0.002
-4B		1200	0.002
-5B		3000	0.002
-6B		4000	0.002

1/ Part number MS20221-1 deleted.

Downloaded from http://www.everyspec.com

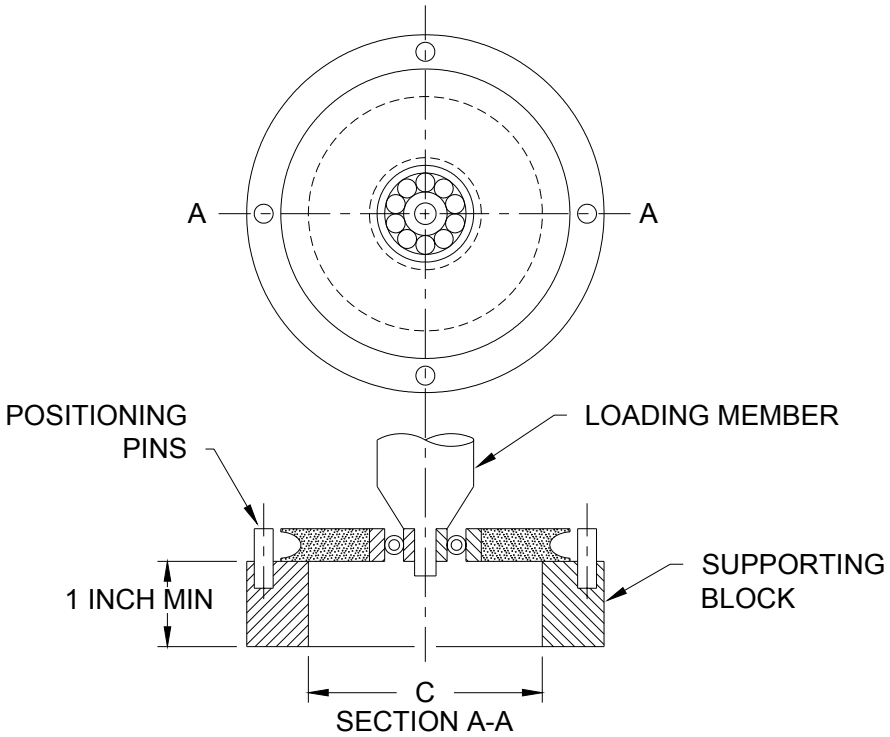

FIGURE 4. Bonding strength test setup.

TABLE VI. Bonding strength test tolerances.

Part number		C groove dia (inches)	Bonding strength proof load (lbs) min
MS20219-1,	-A1	1.000	300
-2,	-A2	1.437	300
-3,	-A3	1.437	300
-4,	-A4	2.312	300
-5,	-A5	2.312	300
MS20220-1,	-A1	1.250	300
-2,	-A2	2.500	500
-3,	-A3	3.750	500
-4,	-A4	5.000	500
MS20221 1/	-A1	2.000	600
-2,	-A2	3.500	800
-3,	-A3	5.000	800
MS24566-1B		0.972	200
-2B		2.222	200
-3B		1.510	280
-4B		3.010	280
-5B		4.374	800
-6B		5.374	800

1/ Part number MS20221-1 deleted.

Downloaded from http://www.everyspec.com

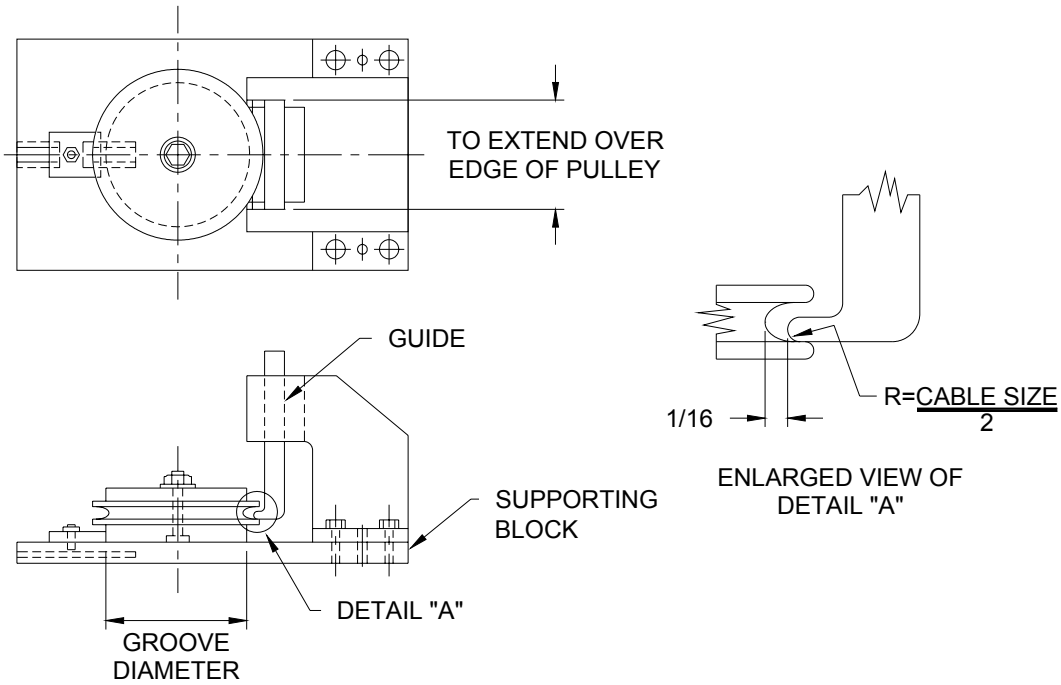

FIGURE 5. Flange strength test setup.

TABLE VII. Flange strength test tolerances.

Part number		Flange strength load (lbs) min
MS20219-1,	-A1	75
-2,	-A2	75
-3,	-A3	75
-4,	-A4	75
-5,	-A5	75
MS20220-1,	-A1	125
-2,	-A2	175
-3,	-A3	175
-4,	-A4	175
MS20221 1/	-A1	250
-2,	-A2	250
-3,	-A3	250
MS24566-1B		50
-2B		50
-3B		175
-4B		175
-5B		250
-6B		250

1/ Part number MS20221-1 deleted.

Downloaded from http://www.everyspec.com

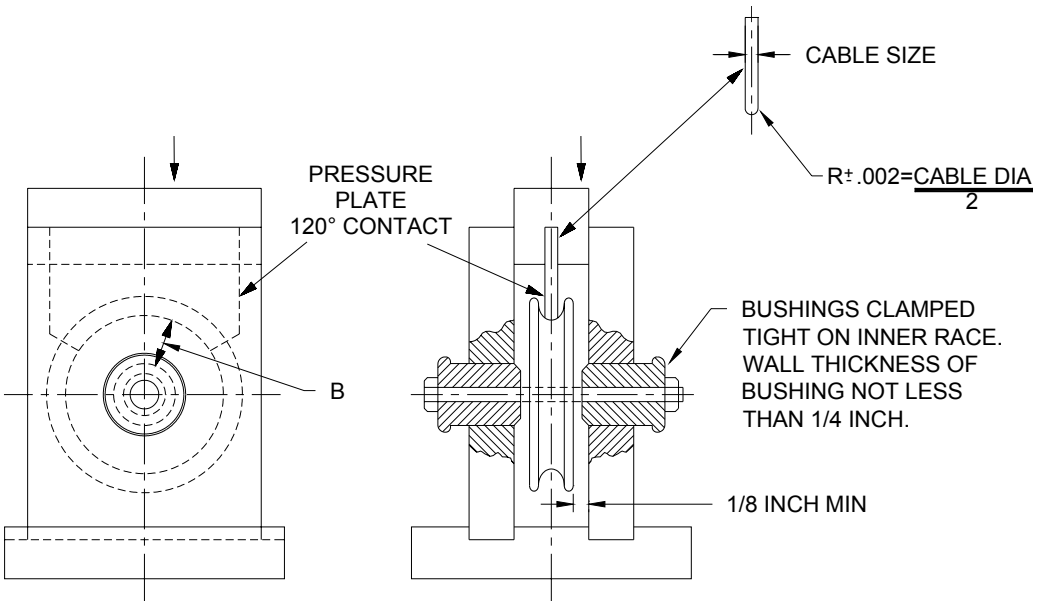

FIGURE 6. Sheave strength test setup.

TABLE VIII. Sheave strength test tolerances.

Part number		B groove rad ±0.004	Cable dia (inch)	Sheave strength load (lbs) min	Pressure plate wrap angle (°)
MS20219-1,	-A1	0.500	3/32	960	120
-2,	-A2	0.724	3/32	960	120
-3,	-A3	0.724	3/32	960	120
-4,	-A4	1.161	3/32	1,840	120
-5,	-A5	1.161	3/32	1,840	120
MS20220-1,	-A1	0.630	3/16	1,000	120
-2,	-A2	1.255	3/16	3,360	120
-3,	-A3	1.880	3/16	5,000	120
-4,	-A4	2.505	3/16	5,000	120
MS20221 1/	-A1	1.005	1/4	5,600	120
-2,	-A2	1.755	1/4	9,800	120
-3,	-A3	2.505	1/4	14,000	120
MS24566-1B		0.486	3/32	600	120
-2B		1.111	3/32	1,000	120
-3B		0.755	3/16	1,200	120
-4B		1.505	3/16	2,400	120
-5B		2.187	1/4	6,000	120
-6B		2.687	1/4	8,000	120

1/ Part number MS20221-1 deleted.

Downloaded from http://www.everyspec.com

Custodians:
Army - AV
Navy - AS
Air Force - 99

Review Activity:
Air Force - 71

Preparing Activity:
DLA - GS5

(Project 1640-0008)

NOTE: The activities listed above were interested in this document as of the date of this document. Since organizations and responsibilities can change, you should verify the currency of the information above using the ASSIST database at http://assist.daps.dla.mil/.