Downloaded from http://www.everyspec.com

INCH-POUND
MIL-DTL-62186B
6 January 1999
SUPERSEDING
MIL-PRF-62186A
10 April 1997

DETAIL SPECIFICATION

GENERATOR, ALTERNATING CURRENT (650 AMPERE RECTIFIED), 28 VOLTS DIRECT CURRENT (OIL COOLED)

This specification is approved for use by all Departments and Agencies of the Department of Defense.

1. SCOPE

1.1 Scope. This specification defines the requirements for an alternating current, 650 ampere rectified, 28 volt direct current, oil cooled generator, referred to herein as "alternator," used in the electrical generating systems of the M60 series tanks (see 6.1).

2. APPLICABLE DOCUMENTS

2.1 General. The documents listed in this section are specified in sections 3 and 4 of this specification. This section does not include documents in other sections of this specification or recommended for additional information or as examples. While every effort has been made to ensure the completeness of this list, document users are cautioned that they must meet all specified requirement documents cited in sections 3 and 4 of this specification, whether or not they are listed.

Beneficial comments (recommendations, additions, deletions) and any pertinent data which may be of use in improving this document should be addressed to: U.S. Army Tank-automotive and Armaments Command, ATTN: AMSTA-TR-E/BLUE, Warren, MI 48397-5000, by using the Standardization Document Improvement Proposal (DD Form 1426) appearing at the end of this document, or by letter.

AMSC N/A FSC 6115

DISTRIBUTION STATEMENT A. Approved for public release; distribution is unlimited.

Downloaded from http://www.everyspec.com

2.2 Government documents.

2.2.1 Specifications, standards, and handbooks. The following specifications, standards, and handbooks form a part of this document to the extent specified herein. Unless otherwise specified, the issues of these documents are those listed in the issue of the Department of Defense Index of Specifications and Standards (DoDISS) and supplements thereto, cited in the solicitation (see 6.2).

SPECIFICATIONS

DEPARTMENT OF DEFENSE

MIL-PRF-2104	- Lubricating Oil, Internal Combustion Engine, Combat/Tactical Service.
MIL-PRF-21260	- Lubricating Oil, Internal Combustion Engine, Preservative Break-In.
MIL-PRF-46167	- Lubricating Oil, Internal Combustion Engine, Arctic.
MIL-DTL-62187	- Regulator, 650 Amp, Solid State.

FEDERAL

A-A-52557	- Fuel Oil, Diesel, for Posts, Camps, and Stations.

STANDARDS

DEPARTMENT OF DEFENSE

MIL-STD-462	- Measurement of Electromagnetic Interference Characteristics, Test Method Standard for (See 4.3.1).
MIL-STD-810	- Environmental Test Methods and Engineering Guidelines (See 4.3.1).

(Unless otherwise indicated, copies of the above specifications, standards, and handbooks are available from the Standardization Document Order Desk, 700 Robbins Avenue, Building 4D, Philadelphia, PA 19111-5094.)

2.2.2 Other Government documents, drawings, and publications. The following other Government documents, drawings, and publications form a part of this document to the extent specified herein. Unless otherwise specified, the issues are those cited in the solicitation.

Downloaded from http://www.everyspec.com

DRAWINGS

ARMY

11655426	- Engine and Transmission Assembly.
11655469	- Generator, AC-DC (Oil Cooled).
11682700	- Engine, Diesel.

(Copies of these drawings are available from the U.S. Army Tank-automotive and Armaments Command, ATTN: AMSTA-TR-E/BLUE, Warren, MI 48397-5000.)

2.3 Order of precedence. In the event of a conflict between the text of this document and the references cited herein, the text of this document takes precedence. Nothing in this document, however, supersedes applicable laws and regulations unless a specific exemption has been obtained.

3. REQUIREMENTS

3.1 First article. When specified (see 6.2 and 6.3), a sample shall be subjected to first article inspection in accordance with 4.1.1.

3.2 Design and construction. Alternators shall be designed and constructed in accordance with Drawing 11655469.

3.3 Materials. Materials shall be in accordance with Drawing 11655469 and 3.3.1 through 3.3.3. Materials not thereby designated shall be suitable for an alternator conforming to the requirements as specified herein.

3.3.1 Material compatibility. All materials used in the alternator shall be compatible with fluids conforming to MIL-PRF-2104, MIL-PRF-21260, MIL-PRF-46167, and A-A-52557.

3.3.2 Dissimilar metals. Except where necessary to complete an electrical circuit, contact between dissimilar metals which would encourage galvanic corrosion shall be avoided. Separation of dissimilar metals shall be accomplished by providing insulation between mating surfaces.

3.3.3 Recycled, recovered, or environmentally preferable materials. Recycled, recovered, or environmentally preferable materials should be used to the maximum extent possible provided that the material meets or exceeds the operational and maintenance requirements, and promotes economically advantageous life cycle costs.

Downloaded from http://www.everyspec.com

3.4 Operating requirements. All alternators shall meet the operating requirements as specified in 3.4.1 through 3.4.14.

3.4.1 Overspeed. The alternator shall withstand 10 000 revolutions per minute (rpm), for at least 1 minute, without sustaining damage.

3.4.2 Maximum field voltage (nonoperating). The alternator's field shall withstand an application of 22 volts (V) of direct current (dc) for 30 minutes without sustaining damage.

3.4.3 Field resistance. The alternator control field shall be 1.80 ± 0.25 ohms (Ω).

3.4.4 Output power. With the alternator providing output power at 650 amperes (A) at 28 Vdc, the field current shall be not greater than 4.25 A at 2400 rpm, and 3.15 A at 8000 rpm.

3.4.5 Ripple voltage. With an output voltage of 28 Vdc, the ripple voltage shall be not greater than 4 V, peak-to-peak.

3.4.6 Overload output current. The alternator shall withstand an output load of 800 ± 25 A at not less than 23 Vdc for 30 seconds without sustaining damage. The field current shall be not greater than 4 A.

3.4.7 Alternating current (ac) signal. With 20 ± 2 Vdc applied to the field terminals, the ac signal level shall be 7.1 ± 0.5 V root mean square (rms) at an alternator speed of 900 rpm, and 8.9 ± 0.5 V rms at an alternator speed of 1100 rpm.

3.4.8 Current transformer (CT) signal. The CT signal level shall be 2.8 + 0.2, -0.3 V rms with a 650 A load and at 8000 rpm.

3.4.9 Alternator oil system. The alternator shall be equipped with a self-contained oil pump with a pressure regulator valve. The oil system shall produce a cooling oil flow of not less than 2.35 gallons per minute (gal/min) (0.15 liters per second (L/s)), nor greater than 6.0 gal/min (0.38 L/s). The alternator oil pump outlet pressure shall be not greater than the proof pressure.

3.4.10 Transient load. Transient load requirements shall be in accordance with figure 1.

3.4.11 Efficiency. The efficiency of the alternator shall be not less than 65 percent (%).

3.4.12 Proof pressure. The alternator cooling system shall withstand a 200 pound per square inch (psi) (1379 kilopascals (kPa)) pressure for at least 5 minutes without permanent physical deformation, rupture, or a leakage rate greater than 10 psi drop per minute (psi/min) (69 kPa per minute (kPa/min)).

Downloaded from http://www.everyspec.com

3.4.13 Torsion. The alternation shall meet the torsion requirements as specified in 3.4.13.1 through 3.4.13.3.

3.4.13.1 Natural frequency. The natural torsional resonant frequency of the rotor and shafting system shall be between 100 and 140 hertz (Hz).

3.4.13.2 Vibratory torque. The alternator shall withstand a vibratory torque in accordance with figure 2 for a period producing 12 000 torque reversals, without sustaining damage.

3.4.13.3 Torsional application. The alternator shall withstand operation on an engine-transmission assembly conforming to Drawing 11655426 for 192 hours without sustaining damage, and without degrading the system drive train or compromising engine-transmission assembly performance.

3.4.14 Electromagnetic interference (EMI). The alternator's broad-band conducted and radiated emissions shall be not greater than the limits as specified in figures 3 and 4.

3.5 Interface requirements. In addition to meeting the interface requirements and envelope dimensions as specified in Drawing 11655469 (see 3.2), the alternator shall be as specified in 3.5.1 through 3.5.3.

3.5.1 Installation compatibility. The alternator shall fit and function as specified in 3.4 when installed on an engine conforming to Drawing 11682700.

3.5.2 Regulator. The alternator shall fit and function as specified in 3.4 when operating with a regulator conforming to MIL-DTL-62187.

3.5.3 Weight. The alternator shall be no greater than 100 pounds (lb) (45 kilograms (kg)).

3.6 Support and ownership requirements. The alternator shall possess the life cycle ownership characteristics as specified in 3.6.1 and 3.6.2.

3.6.1 Endurance. The alternator shall withstand operation as specified in table I, with the oil inlet pressure as specified in table II, using contaminated oil, without sustaining damage, and without requiring servicing or the replacement of parts.

Downloaded from http://www.everyspec.com

TABLE I. Endurance time schedule and conditions.

Condition	Time (hours)	Alternator (rpm)	Normal attitude 1/ 2/ Alternator constant load (A)	Resistive cyclic load (A)	Total alternator (A)	Cyclic load (seconds) on	Cyclic load (seconds) off
a	1.5	2400	320	330	650	3	57
b	7.5	5120	320	330	650	3	57
c	14.5	3520	320	330	650	3	57
d	0.5	8000	650	0	650		
	24 hours per cycle						
			Inclined attitude 2/				
e	9	2400	---------- no load ----------				
f	9	4000					
g	9	5000					
h	3	6000					
	30 hours per cycle						

1/ System volts at normal attitude shall be 26.50 ± 0.75, applicable at 225 degrees Fahrenheit (°F) (107 degrees Celsius (°C)). Voltage values at lower temperatures shall be in accordance with figure 5.

2/ At the conclusion of 22 cycles at normal attitude, the alternator shall be operated for 6 hours at condition (a) and 4 hours at condition (b), except with the alternator only at constant load, followed by 2 cycles of inclined attitude.

TABLE II. Operating conditions.

Time	Oil inlet pressure
First 600 hours	-0.385 ± 0.03 psi (-2.7 ± 0.2 kPa)
Second 600 hours	45 ± 2 psi (310 ± 13.8 kPa)
Third 600 hours	-0.385 ± 0.03 psi (-2.7 ± 0.2 kPa)
Fourth 600 hours	45 ± 2 psi (310 ± 13.8 kPa)
Fifth 600 hours	-0.385 ± 0.03 psi (-2.7 ± 0.2 kPa)

3.6.2 Nameplate. A permanently and legibly marked nameplate shall be conspicuously attached to the alternator frame and shall contain, as a minimum, the following information:

a. "Generator, Alternating Current, Direct Current (Oil Cooled)".
b. "28 Vdc".
c. "650 A".
d. Military part number
e. National stock number.
f. Manufacturer's identification (CAGE).

Downloaded from http://www.everyspec.com

g. Manufacturer's serial number.
h. Contract number.
i. Date of manufacture.

3.7 Operating environment requirements. Each regulator shall operate under the environmental conditions as specified in 3.7.1 through 3.7.8.

3.7.1 High temperature. The alternator shall operate in an ambient temperature of 225 ± 5°F (107 ± 2.8°C) without damage or loss of performance.

3.7.2 Low temperature. The alternator shall meet the low temperature requirements as specified in 3.7.2.1 and 3.7.2.2.

3.7.2.1 Cold soak. The alternator shall operate in an ambient temperature of -25 ± 5°F (-31.7 ± 2.8°C) without damage or loss of performance, and without the alternator oil pump outlet pressure exceeding the proof pressure.

3.7.2.2 High viscosity oil. The alternator shall withstand operation at an ambient temperature of -10 ± 2°F (-23.3 ± 1°C) for at least 24 hours, using grade 10 oil conforming to MIL-PRF-2104, and without indication of failure, fractures, distortions, erosion, internal and external oil leakage, or other evidence of deterioration.

3.7.3 Shock. The alternator shall withstand a saw-tooth wave shock pulse of 20 gravity units (g) for 11 milliseconds (ms) without sustaining damage.

3.7.4 Vibration. The alternator shall withstand exposure to input vibration levels outlined in figures 6 through 8 for a period of at least 100 minutes in each of the mutually perpendicular axes without damage or loss of performance.

3.7.5 Waterproofness. The alternator shall maintain a differential pressure of nitrogen at 10 pounds per square inch gage (psig) (69 kPa). The leakage rate shall be not greater than 3 psig (20.7 kPa) in 2 minutes.

3.7.6 Humidity. The alternator shall withstand exposure to 5 continuous 48 hour humidity cycles in accordance with figure 9 without damage or loss of performance.

3.7.7 Aqueous salt environment. The alternator shall operate in an aqueous salt atmosphere (5 ± 1% salt and 95% water) without corroding, sustaining electrical damage, or physically deforming.

Downloaded from http://www.everyspec.com

3.7.8 Fungus resistance. The alternator shall operate in environments conducive to spore germination and growth (air temperature between 75 to 88°F (24 to 31°C) and relative humidity between 90 to 100% without a compromise in performance attributable to the deleterious effects of fungus.

4. VERIFICATION

4.1 Classification of inspections. Inspection requirements are classified as follows:

a. First article inspection (see 4.1.1).
   1. Preproduction inspection (PPI) (see 4.1.1.1).
   2. Initial production inspection (IPI) (see 4.1.1.2).
b. Conformance inspection (see 4.1.2).

4.1.1 First article inspection. First article inspections shall be performed on preproduction or initial production samples as specified in 4.1.1.1 and 4.1.1.2.

4.1.1.1 Preproduction inspection. When specified (see 6.2), a preproduction sample consisting of two alternators shall be subject to the PPI tests as specified in table III.

4.1.1.2 Initial production inspection. Unless otherwise specified (see 6.2), an initial production sample consisting of two alternators from the first ten produced shall be subject to the IPI tests as specified in table III.

TABLE III. Verification methods.

Title	Requirement	Inspection	First article inspections				Conformance	
			PPI sample		IPI sample			
			1	2	1	2	Exams	100%
Design and construction	3.2	4.3.3	X		X		X	
Materials	3.3	4.3.4	X		X			
Material compatibility	3.3.1	4.3.4	X		X			
Dissimilar metals	3.3.2	4.3.4	X		X			
Operating requirements	3.4	4.3.5	X	X	X	X		X
Overspeed	3.4.1	4.3.5.1	X	X	X	X		
Maximum field voltage	3.4.2	4.3.5.2	X	X	X	X		X
Field resistance	3.4.3	4.3.5.3	X	X	X	X		X
Output power	3.4.4	4.3.5.4	X	X	X	X		
Ripple voltage	3.4.5	4.3.5.5,	X	X	X	X		
Acceptance		4.3.5.5.1						X
Overload output current	3.4.6	4.3.5.6	X	X	X	X		X
AC signal	3.4.7	4.3.5.7	X	X	X	X		X

Downloaded from http://www.everyspec.com

TABLE III. Verification methods - Continued.

Title	Require-ment	Inspec-tion	First article inspections				Conformance	
			PPI sample		IPI sample			
			1	2	1	2	Exams	100%
CT signal	3.4.8	4.3.5.8,	X	X	X	X		X
Acceptance		4.3.5.8.1					X	
Alternator oil system	3.4.9	4.3.5.9	X	X	X	X	X	X
Transient load	3.4.10	4.3.5.10	X		X			
Efficiency	3.4.11	4.3.5.11	X		X			
Proof pressure	3.4.12	4.3.5.12,	X	X	X	X		
Acceptance		4.3.5.12.1						X
Torsion	3.4.13	4.3.5.13	X					
EMI	3.4.14	4.3.5.14				X		
Interface requirements	3.5	4.3.6						
Installation compatibility	3.5.1	4.3.6.1	X		X			X
Regulator	3.5.2	4.3.6.2	X		X			X
Weight	3.5.3	4.3.6.3	X	X	X	X		
Support and ownership requirements	3.6	4.3.7						
Endurance	3.6.1	4.3.7.1, 4.3.7.2	X					
Nameplate	3.6.2	4.3.7.3	X		X		X	
Operating environment requirements	3.7	4.3.8						
High temperature	3.7.1	4.3.8.1	X		X			
Low temperature	3.7.2	4.3.8.2	X		X			
Shock	3.7.3	4.3.8.3	X		X			
Vibration	3.7.4	4.3.8.4	X		X			
Waterproofness	3.7.5	4.3.8.5	X	X	X	X		
Humidity	3.7.6	4.3.8.6	X					
Aqueous salt environment	3.7.7	4.3.8.7	X					
Fungus resistance	3.7.8	4.3.8.8	X					

4.1.2 Conformance inspection. Unless otherwise specified (see 6.2 and 6.4), each alternator shall be tested for the 100% conformance tests as specified in table III. Samples selected as specified in 4.1.2.1 shall be verified as specified in table III.

4.1.2.1 Sampling. The sampling plan shall be as specified in the contract (see 6.2).

4.2 Inspection conditions. Unless otherwise specified herein or in the contract (see 6.2), all inspections shall be conducted under the following conditions:

Downloaded from http://www.everyspec.com

a. Air temperature: 80 ± 20°F (26.7 ± 11°C).
b. Barometric pressure: 28.5 (+2, -3) inches (96.5 (+6.8, -10 kPa)) of mercury.
c. Relative humidity: 50 ± 30%.

4.3 Verification methods. The types of verification methods included in this section are visual, measurement, sample tests, full-scale demonstration tests, simulation, modeling, engineering evaluation, component properties analysis, and similarity to previously-approved or previously-qualified designs.

4.3.1 Verification alternatives. The manufacturer may propose alternative test methods, techniques, or equipment, including the application of statistical process control, tool control, or cost-effective sampling procedures, to verify performance. See the contract for alternatives that replace verifications required by this specification.

4.3.2 Order of inspection. The inspection sequence may be in any order except that the operating environment verifications (see 4.3.8) shall be performed prior to the operating requirements verifications (see 4.3.5).

4.3.3 Design and construction verification. Use one or more of the methods outlined in 4.3.1 to verify that the alternator is built in accordance with Drawing 11655469. Conformance shall be determined by inspection of the contractor records providing proof or certification that design construction, processing, and materials conform to requirements. Applicable records shall include drawings, specifications, design data, receiving inspection records, processing and quality control standards, vendor catalogs and certifications, industry standards, test reports, and rating data.

4.3.4 Materials verification. Use one or more of the methods outlined in 4.3.1 to verify that the materials used to manufacture the alternator are compatible with MIL-PRF-2104, MIL-PRF-21260, MIL-PRF-46167, and A-A-52557, and that if dissimilar metals are used except to complete an electrical circuit, their contact does not encourage galvanic corrosion. Conformance shall be determined by inspection of the contractor records providing proof or certification that design construction, processing, and materials conform to requirements. Applicable records shall include drawings, specifications, design data, receiving inspection records, processing and quality control standards, vendor catalogs and certifications, industry standards, test reports, and rating data.

4.3.5 Operating requirements verifications. Alternators shall be subjected to and pass the operating requirements tests as specified in 4.3.5, while exhibiting no external oil leakage greater than a loss of one fluid drop per hour (see 6.6.3). Unless otherwise specified herein, operating requirements tests shall be conducted under the following conditions:

Downloaded from http://www.everyspec.com

a. Oil inlet pressure to the alternator shall be maintained at 225 ± 5°F (107 ± 2.8°C).
b. Alternator coolant oil shall be MIL-PRF-2104, grade 30.
c. Inlet oil supply pressure shall not exceed 45 ± 2 psi (310 ± 13.8 kPa).
d. Alternator outlet pressure shall not exceed 5 psi (34.5 kPa).
e. The tests shall be conducted with the alternator at a stabilized temperature. The temperature shall be considered stabilized when constant conditions of speed and load current fail to cause a change in alternator oil inlet and outlet differential temperature by more than 2°F (-1.1°C) during a 10 minute period.
f. The loads shall be resistive and variable to allow 1000 A maximum.
g. Oscillograph galvanometer response shall be flat within 5% form 0 to 2000 Hz.

4.3.5.1 Overspeed test. Connect the alternator to a test circuit as specified in figure 10. Operate the alternator at 10 000 rpm with open field for a period of 1 minute. There shall be no external oil leakage greater than a loss of one fluid drop per hour, or any other evidence of damage.

4.3.5.2 Maximum field voltage test. Connect the alternator to a test circuit as specified in figure 10. With the alternator not operating, apply a field supply voltage of 22 Vdc (E_F) to the alternator field pin (A to C) at the J2 connector for 30 minutes. There shall be no evidence of damage.

4.3.5.3 Field resistance test. Connect the alternator to a test circuit as specified in figure 10. Verify that the alternator field resistance between terminals A and C on the J2 connector with the power supply disconnected is 1.80 ± 0.25 Ω.

4.3.5.4 Output power test. Connect the alternator to a test circuit as specified in figure 10. With the alternator operating with an output power of 650 A (I_l) AT 28 Vdc (E_F), the field current (I_F) shall be not greater than 4 A.

4.3.5.5 Ripple voltage test. Connect the alternator to a test circuit as specified in figure 11. The ripple voltage at ES shall be not greater than 4 V (+peak -peak and peak-to-peak) for each condition as specified in table IV.

TABLE IV. Ripple voltage conditions.

Condition (rpm)	Load (A)	Regulated volts
a. 3000	50	28 ± 0.5
b. 3000	650	28 ± 0.5
c. 8000	50	28 ± 0.5
d. 8000	650	28 ± 0.5

Downloaded from http://www.everyspec.com

4.3.5.5.1 Ripple voltage acceptance test. Connect the alternator to a test circuit as specified in figure 11. With the alternator operating as specified in table IV, condition (d), the ripple voltage shall be not more than 4 V (+peak -peak and peak-to-peak).

4.3.5.6 Overload output current test. Connect the alternator to a test circuit as specified in figure 10. Operate the alternator at 5000 rpm with an output power of 800 ± 25 A (I_A) at not less than 23 Vdc (E_A) for 30 seconds. The field current (I_F) shall be not less than 4 A.

4.3.5.7 AC signal test. Connect the alternator to a test circuit as specified in figure 10. Apply 20 ± 2 Vdc to the alternator field at pin C to pin A at the J2 connector. At alternator speeds of 900 rpm and 1100 rpm, the AC signal voltage (E_{AC}) at pin A to pin C at the J1 connector shall be 7.1 ± 0.5 V rms and 8.9 ± 0.5 V rms, respectively.

4.3.5.8 CT signal test. Connect the alternator to a test circuit as specified in figure 10. Operate the alternator at 8000 rpm with a power output of 650 A (I_A) and 28 Vdc (E_A). The CT signal (E_{CT}) at the J1 connector from pin B to pin C shall be 2.8 +0.2, -0.3 V rms.

4.3.5.8.1 CT signal acceptance test. Operate the alternator as in 4.3.5.8. The CT signal (E_{CT}) at the J2 connector from pin B to pin C shall be 2.8 +0.2, -0.3 V rms.

4.3.5.9 Alternator oil system test. Connect the alternator to a test circuit as specified in figure 10. With no electrical load, and with alternator speed, alternator outlet pressure (P2), and oil inlet pressure as specified in table V, the oil flow (F1) shall be not less than 2.35 gal/min (0.15 L/s), nor greater than 6.0 gal/min (0.38 L/s). The oil pump outlet pressure (P1) shall be not greater than the proof pressure.

TABLE V. Oil system test conditions.

Test	Alternator speed (rpm)	Alternator outlet pressure (P2)	Alternator oil inlet pressure
1	2000 and 8000	5 psi (34.5 kPa) maximum	-0.385 ± 0.03 psi (-2.7 ± 0.2 kPa)
2	2000 and 8000	5 psi (34.5 kPa) maximum	45 ± 2 psi (310 ± 13.8 kPa)

4.3.5.10 Transient load test. Connect the alternator to a test circuit as specified in figure 11. Subject the alternator to ten motor load applications and removals at 2400 and 8000 rpm, and at each speed per figure 1. The transient load requirements shall be in accordance with figure 1.

4.3.5.11 Efficiency test. Connect the alternator to a test circuit as specified in figure 10. With the alternator at a speed of 8000 rpm, the output current at 650 A, the output voltage at 28 Vdc at the alternator terminals, the inlet oil temperature at 225°F (107°C), and using the following equation, the efficiency of the alternator shall be at least 65%.

Downloaded from http://www.everyspec.com

$$\text{Efficiency (n)} = \frac{0.001341 \ E_A \times I_A \times 100}{S_{HP}}$$

n = Efficiency at terminals in %.
E_A= Alternator terminal voltage.
I_A= Alternator current in A.
S_{HP}= Shaft horsepower input to alternator.

4.3.5.12 Proof pressure. Cap and seal the oil inlet port of the alternator. Connect a regulated supply of dry nitrogen to the oil outlet port and pressurize to 200 psi (1379 kPa) in 5 minutes. With the nitrogen supply turned off, verify that the pressure drop is not greater than 10 psi (69 kPa) in 1 minute.

4.3.5.12.1 Proof pressure acceptance test. With the oil inlet capped and sealed, connect a regulated supply of dry nitrogen to the oil outlet port. Pressurize to 150 psi (1034 kPa), and shut off the supply. Verify that the pressure drop is not greater than 10 psi (69 kPa) in 1 minute.

4.3.5.13 Torsion. Complete the tests as specified in 4.3.5.13.1 through 4.3.5.13.3.

4.3.5.13.1 Natural frequency test. Support the alternator and drive shaft system in the normal bearings. Rigidly attach the rotor and shafting at the driven end to a reaction flywheel having a mass moment of inertia of not less than 20 times that of the alternator rotating system. The natural torsional resonant frequency of the rotor and the shafting system shall be between 100 and 140 Hz.

4.3.5.13.2 Vibratory torque test. Attach the alternator to an engine-transmission assembly and drive the alternator to obtain a vibratory torque of 2100 pound-force inches (lbf-in) (237.3 Newton-meters (N-m)). With positive torque not greater than 2100 lbf-in (237.3 N-m), drive the alternator at a frequency between 20 and 25 Hz for a period which produces 12 000 torque reversals. There shall be no evidence of damage.

4.3.5.13.3 Torsional application. Operate the alternator on an engine-transmission assembly for 4 cycles of 48 hours each per items (a), (b), (c), and (d) of table I for a total of 192 hours. There shall be no failure, parts replacement, or servicing. Subsequently, the alternator shall complete and pass tests as specified in 4.3.5.4 through 4.3.5.9. There shall be no indication of failure, fracture, distortion, erosion, or other evidence of deterioration. The engine-transmission assembly shall show no evidence of deterioration in the drive train elements and shall exhibit no loss of performance.

Downloaded from http://www.everyspec.com

4.3.5.14 EMI test. Connect the alternator to a test circuit as specified in figure 11. Subject the alternator to test methods RE 02 and CE 04 as specified in MIL-STD-462, or equivalent (see 4.3.1). Operate the alternator at 5000 rpm and apply a 500 A load. Broadband conducted emissions shall be observed with a balanced 650 A split load having the current probe on a 50 A load lead, and shall be in accordance with figures 3 and 4.

4.3.6 Interface requirements verifications. Complete the tests as specified in 4.3.6.1 through 4.3.6.3.

4.3.6.1 Installation compatibility verification. Use one or more of the methods outlined in 4.3.1 to verify that the alternator shall fit and function as specified herein when installed on an engine conforming to Drawing 11682700. When specified (see 6.2), the alternator shall be installed on an engine conforming to Drawing 11682700 and shall subsequently pass the tests as specified under 4.3.5.

4.3.6.2 Regulator verification. Use one or more of the methods outlined in 4.3.1 to verify that the alternator shall fit and function as specified herein when operating with a regulator conforming to MIL-DTL-62187. When specified (see 6.2), the alternator shall be tested and pass the verifications as specified under 4.3.5 while operating with a regulator conforming to MIL-DTL-62187.

4.3.6.3 Weight verification. Use standard inspection equipment to verify that the alternator weighs no more than 100 lb (45 kg) with no oil in the unit.

4.3.7 Support and ownership verifications. Complete each test as specified in 4.3.7.1 through 4.3.7.3.

4.3.7.1 Endurance test. Subject the alternator to 3000 hours of operation in accordance with tables II and III at constant and cyclic loads and with the following conditions:

a. Oil shall be contaminated with standardized oil filter test contaminant (SOFTC-2A) as specified in 4.3.7.1.1.
b. Total internal oil leakage shall be no greater than 91.5 cubic inches (in^3) (1500 cubic centimeters (cm^3)).
c. Internal oil leakage during any of the 600 hour cycles shall not exceed 24.4 in^3 (400 cm^3).
d. External oil leakage shall be not greater than 0.03 in^3 (0.49 cm^3) per hour.
e. Except as specified in (g), ambient temperature shall be 225 ± 5°F (107 ± 2.8°C). Inclined operation shall be at ambient room temperature with the alternator motor driven at no load and not excited during the last 60 hours of each of the 600 hour cycles. The alternator drive end shall be tilted down 45° from horizontal for 30 hours and tilted up 45° form horizontal for 30 hours.

Downloaded from http://www.everyspec.com

4.3.7.1.1 Oil contamination.

4.3.7.1.1.1 SOFTC-2A constituents. The composition of SOFTC-2A shall be as follows:

a. Sixteen parts by weight of carbon black with an average particle size of 85 nanometers (nm).
b. Two parts by weight of ferric oxide with 95% of the particles within the range of 0 to 5 micrometers (µm).
c. Four parts by weight of polyvinyl (PV) resin.
d. Seventy-eight parts by weight of MIL-PRF-2104.

4.3.7.1.1.2 Preparation of SOFTC-2A. The preparation of SOFTC-2A shall be as follows:

a. All of the carbon black and 20 to 20% of the test oil shall be placed in a mechanical mixer and mixed at a show speed.
b. The mixture from (a) shall be milled over a conventional paint roller mill. The resultant paste shall be collected directly form the mill into a container having an additional 25% of the original quantity of oil. The milled slurry and the oil shall be mixed until homogeneous.
c. A dry-mix of the remaining solid constituents (the PV resin and ferric oxide), shall be prepared. The slurry from (b) shall be slowly added until a stiff paste is obtained. The balance of the slurry and the remainder of the lubricating oil shall be added to this paste and mixed until homogeneous.

4.3.7.1.1.3 Application of SOFTC-2A. SOFTC-2A shall be used in the endurance test as specified in table VI.

TABLE VI. Oil contamination.

Test hours	Oil contamination
Start of 600 hour cycle	Add 3.2 grams (g) of SOFTC-2A per 5 gallons (gal) of oil in oil system.
At 200 hours	Add 3.2 g of SOFTC-2A per 5 gal of used oil already in system.
At 400 hours	Add 3.2 g of SOFTC-2A per 5 gal of used oil. Total contamination now 9.6 g SOFTC-2A per 5 gal.
At 600 hours	Drain used oil and grit out of system. Thoroughly flush oil and grip from system with solvent. Use air to thoroughly dry system. Refill system per “start” for next 600 hour period, as applicable.

Downloaded from http://www.everyspec.com

4.3.7.2 Endurance operation test. When specified (see 6.2), install the alternator on an engine-transmission conforming to Drawing 11655426. Operate the engine-transmission assembly to provide alternator performance in accordance with the conditions as specified in 4.3.7.1 and tables I and II, twice running through a, b, c, and d, in sequence, for a total of 48 endurance hours. The alternator shall exhibit no indication of failure, fracture, distortion, erosion, or other evidence of deterioration.

4.3.7.3 Nameplate test. Visually inspect nameplate for permanent and legible identification marking.

4.3.8 Operating environment verifications. Complete and pass the tests as specified in 4.3.8.1 through 4.3.8.6.

4.3.8.1 High temperature test. Fill the alternator oil circuits with MIL-PRF-2104, grade 40. Subject the unit to a high temperature test in accordance with procedure II, method 501.3 of MIL-STD-810, or equivalent (see 4.3.1), except that 36 hours of storage at 225°F (107°C) shall be substituted for steps 1 through 6, and steps 7 through 11 shall be performed at standard ambient conditions. When stabilized at the 225°F (107°C) operational temperature, the unit shall be subject to and pass the tests as specified in 4.3.5.1, 4.3.5.4, 4.3.5.7, 4.3.5.8, and 4.3.5.9 without evidence of damage. The same tests are to be repeated during the ambient operational test.

4.3.8.2 Low temperature test. Perform each low temperature test as specified in 4.3.8.2.1 and 4.3.8.2.2.

4.3.8.2.1 Cold soak test. Fill the alternator oil circuits with MIL-PRF-46167 prior to start of cold soak test. The alternator shall be subject to a low temperature storage test at -65 ± 5°F (-54 ± 2.8°C) for 12 hours. At the conclusion of the cold soak test, the alternator and its oil supply shall be temperature stabilized at -25 ± 5°F (-32 ± 2.8°C). Conduct a low temperature operation test at -25°F (-32°C) and in accordance with procedure I, method 502.3 of MIL-STD-810, or equivalent (see 4.3.1). While stabilized at -25°F (-32°C), and with 45 psig (310 kPa) oil pump inlet pressure, the unit shall be subjected to and pass the tests as specified in 4.3.5.1, 4.3.5.4, 4.3.5.7, and 4.3.5.8 without evidence of damage. The alternator oil pump outlet pressure shall not exceed the proof pressure.

4.3.8.2.2 High viscosity oil test. Install the alternator on an engine-transmission assembly and operate at no electrical load with 10 grade oil conforming to MIL-PRF-2104. The test system shall be cold soaked at -10°F (-23°C) for 24 hours. The engine shall be started while at -10°F (-23°C) and shall remain at idle rpm until engine oil pressure stabilizes. The engine shall

Downloaded from http://www.everyspec.com

then be immediately accelerated to maximum. There shall be no indication of failure, fractures, distortions, erosion, internal oil leakage, or other evidence of deterioration, and external oil leakage shall be not greater than 0.03 in^3 (0.49 cm^3) per hour.

4.3.8.3 Shock test. Mount the alternator on a shock test machine, utilizing the alternator mounting brackets and simulating the actual installation as much as practical. Subject the alternator to sawtooth shock pulses of 20 g for a duration of 11, +2 ms in accordance with MIL-STD-810, method 516.4, procedure I, or equivalent (see 4.3.1). There shall be no evidence of damage.

4.3.8.4 Vibration test. Mount the alternator as in intended use. Vibrate the alternator along each axis according to figures 6 through 8. The vibration axis shall be oriented in accordance with figure 12. Cycling time in each axis shall be 100 minutes. Each sweep shall be 5 to 500 Hz in 15 minutes. Resonant frequencies of the alternator shall be observed and a sinusoidal resonance search shall be conducted for the four most severe resonant frequencies of the alternator. The test sample shall then be subjected to dwell time at the most severe resonance in accordance with the applicable figure. The frequency of applied vibration shall be swept over the specified range in accordance with figure 13. The sweep time of figure 13 is that of an ascending plus a descending time. There shall be no internal oil leakage, external oil leakage in excess of 0.03 in^3 (0.49 cm^3) per hour, or any other evidence of damage.

4.3.8.5 Waterproofness test. Seal all installation openings and pressurize the alternator inside a storage container containing approximately 1 cubic foot (ft^3) (0.028 cubic meters (m^3)) to 10 psig (69 kPa) of nitrogen. With the nitrogen supply shut off, the leakage rate shall not exceed 3 psig (21 kPa) in 2 minutes.

4.3.8.6 Humidity test. Seal all installation openings and place the alternator in a humidity testing chamber. Perform the following operations:

a. Operate the alternator under standard ambient conditions.
b. Dry the alternator at 129°F (54°C) for 24 hours.
c. Condition the alternator at 73°F (23°C) and at 50 ± 10% relative humidity for 24 hours.

NOTE: The alternator may be readjusted or realigned, as necessary, to meet requirements. No further realignment or readjustment shall be permitted throughout this period, other than with accessible controls employed for operation of the alternator. No repair or replacement of parts shall be permitted. Equipment shall be operated only when specified procedures are being performed.

Downloaded from http://www.everyspec.com

d. Raise the internal chamber temperature to 86°F (30°C) and the relative humidity to 94 ± 4%.
e. Subject the alternator to five continuous 48 hour cycles in accordance with figure 9.
f. Upon completion of the test cycles , remove the alternator from the chamber to ambient room conditions. With MIL-PRF-2104 grade 30 oil at 225 ± °5F (107 ± 2.8°C), perform 4.5.3.10 without delay. Return the alternator, with all installation openings sealed, to the chamber. Raise the chamber to 73 ± 5°F (23 ± 2.8°C) and 50 ± 10% relative humidity, and condition for 24 hours.
g. Remove the alternator to ambient room conditions. With MIL-PRF-2104 grade oil at 225 ± 5°F (107 ± 2.8°C) oil inlet temperature, perform 4.5.3.10 without delay. There shall be no evidence of damage.

4.3.8.7 Aqueous salt environment test. Seal all installation openings and subject the alternator to method 509.3 of MIL-STD-810, or equivalent (see 4.3.1), for 4 test cycles. There shall be no evidence of corrosion.

4.3.8.8 Fungus resistance test. Seal all installation openings and install the alternator in a fungus chamber. Subject the alternator to method 508.4 of MIL-STD-810, or equivalent (see 4.3.1), for 28 days. Incubate samples under cyclic temperature and humidity conditions to include 20 hours of relative humidity at 95 ± 5%, at an air temperature of 86 ± 5°F (30 ± 1°C), followed by 4 hours of 100% relative humidity at 77 ± 2°F (25 ± 1°C). There shall be no evidence of fungal growth.

5. PACKAGING

5.1 Packaging. For acquisition purposes, the packaging requirements shall be as specified in the contract or order (see 6.2). When actual packaging of materiel is to be performed by DoD personnel, these personnel need to contact the responsible packaging activity to ascertain requisite packaging requirements. Packaging requirements are maintained by the Inventory Control Point's packaging activity within the Military Department or Defense Agency, or within the Military Department's System Command. Packaging data retrieval is available from the managing Military Department's or Defense Agency's automated packaging files, CD-ROM products, or by contacting the responsible packaging activity.

6. NOTES

(This section contains information of a general or explanatory nature which may be helpful, but is not mandatory.)

Downloaded from http://www.everyspec.com

6.1 Intended use. The 28 V ac/dc, oil cooled alternator is intended for use in the electrical generating systems of the M60 tanks, consisting of an alternator-rectifier and a solid-state voltage regulator. The alternator provides regulated output at any engine load up to 500 A at any engine speed between 2000 and 2400 rpm, and at any load up to 650 A at any speed between 2400 and 8000 rpm, when its field excitation is controlled by a solid-state regulator. Given the extreme environmental conditions under which this item is designed to perform (see 3.7), and the detail design requirements applicable only to the M60 Series Tanks (see 3.2), this item is military unique.

6.2 Acquisition requirements. Acquisition documents must specify the following:

a. Title, number, and date of this specification.
b. Issue of DoDISS to be cited in the solicitation, and if required, the specific issue of individual documents referenced (see 2.2.1).
c. If first article testing is required (see 3.1).
d. If preproduction testing is required (see 4.1.1.1).
e. If initial production testing is other than as specified (see 4.1.1.2).
f. Specification of conformance testing (see 4.1.2).
g. Specification of sampling plan (see 4.1.2.1).
h. If inspection conditions should be other than as specified (see 4.2).
i. If trial installation on an engine conforming to Drawing 11682700 is required (see 4.3.6.1).
j. If trial operation with a regulator conforming to MIL-DTL-62187 is required (see 4.3.6.2).
k. If trial installation on an engine-transmission assembly conforming to Drawing 11655426 is required (see 4.3.7.2).
l. Packaging requirements (see 5.1).

6.3 First article. When requiring a first article inspection, contracting documents should provide specific guidance to offerors. This guidance should cover whether the first article is a first article sample, a pre production item, a first production item, and the number of test items. These documents should also include specific instructions regarding arrangements for examinations, approval of first article test results, and disposition of first articles. Pre-solicitation documents should provide Government waiver rights for samples for first article inspection to bidders offering a previously acquired or tested product. Bidders offering such products who wish to rely on such production testing must furnish evidence with the bid that prior Government approval is appropriate for the pending contract.

6.4 Conformance inspection. Affordable conformance inspection with confidence varies depending upon a number of procurement risk factors. Some of these factors include: Contractor past performance, government schedules and budget, product material and design maturity,

Downloaded from http://www.everyspec.com

manufacturing capital equipment and processes applied, the controlled uniformity of those processes, labor skill and training, and the uniformity of measuring processes and techniques. During the solicitation, contracting documents should indicate those tests desired from table III and their designated frequency based on a risk assessment for the procurement.

6.5 Reference information. Historically, MIL-HDBK-454, "General Guidelines for Electrical Equipment," has provided guidance in procuring the alternator. (Copies of the specified handbook are available from the Standardization Document Order Desk, 700 Robbins Avenue, Building 4D, Philadelphia, PA 19111-5094.)

6.6 Definitions.

6.6.1 Fully charged battery. A fully charged battery is defined as a battery having current consumption of not greater than 4 A and 28 V at room temperature (90 ± 10°F) (32 ± 5.8°C).

6.6.2 Load current. Load current is defined as that current from generator to batteries and resistive load, and controlled by the regulator.

6.6.3 Drop. A drop is defined as a volume of fluid equal to 0.03 in^3 (0.5 cm^3).

6.6.4 Temperature stabilized. A temperature stabilized alternator is defined as a situation when constant conditions of speed and load current fail to cause a change in alternator oil inlet and outlet differential temperature by more than 2°F (1°C) during a 10 minute period.

6.7 Subject term (key word) listing.

Alternator
M60 series tank
Regulator
Solid-state

6.8 Changes from previous issue. Marginal notations are not used in this revision to identify changes with respect to the previous issue due to the extent of the changes.

Downloaded from http://www.everyspec.com

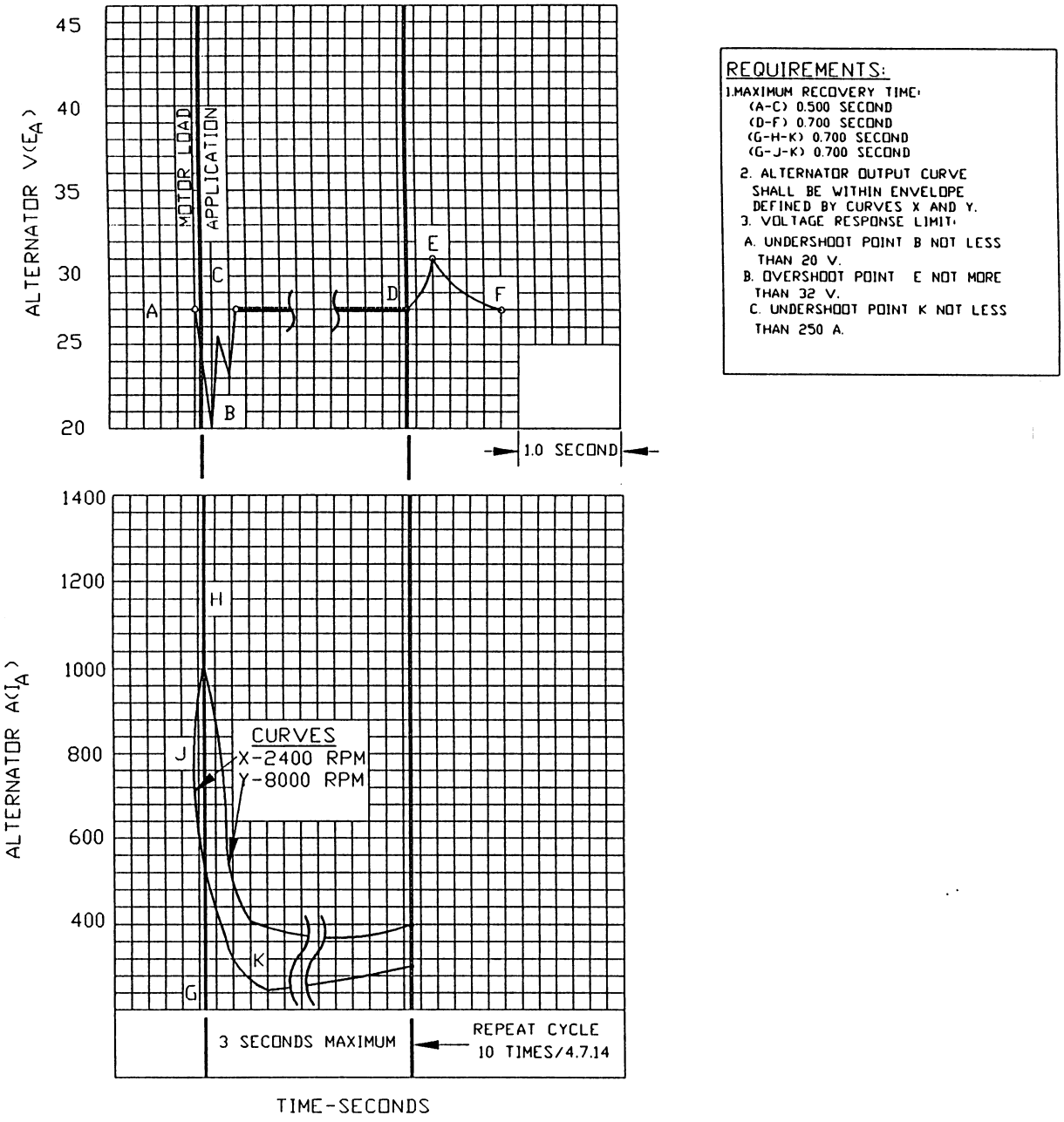

FIGURE 1. Transient loading - oil cooled alternator.

Downloaded from http://www.everyspec.com

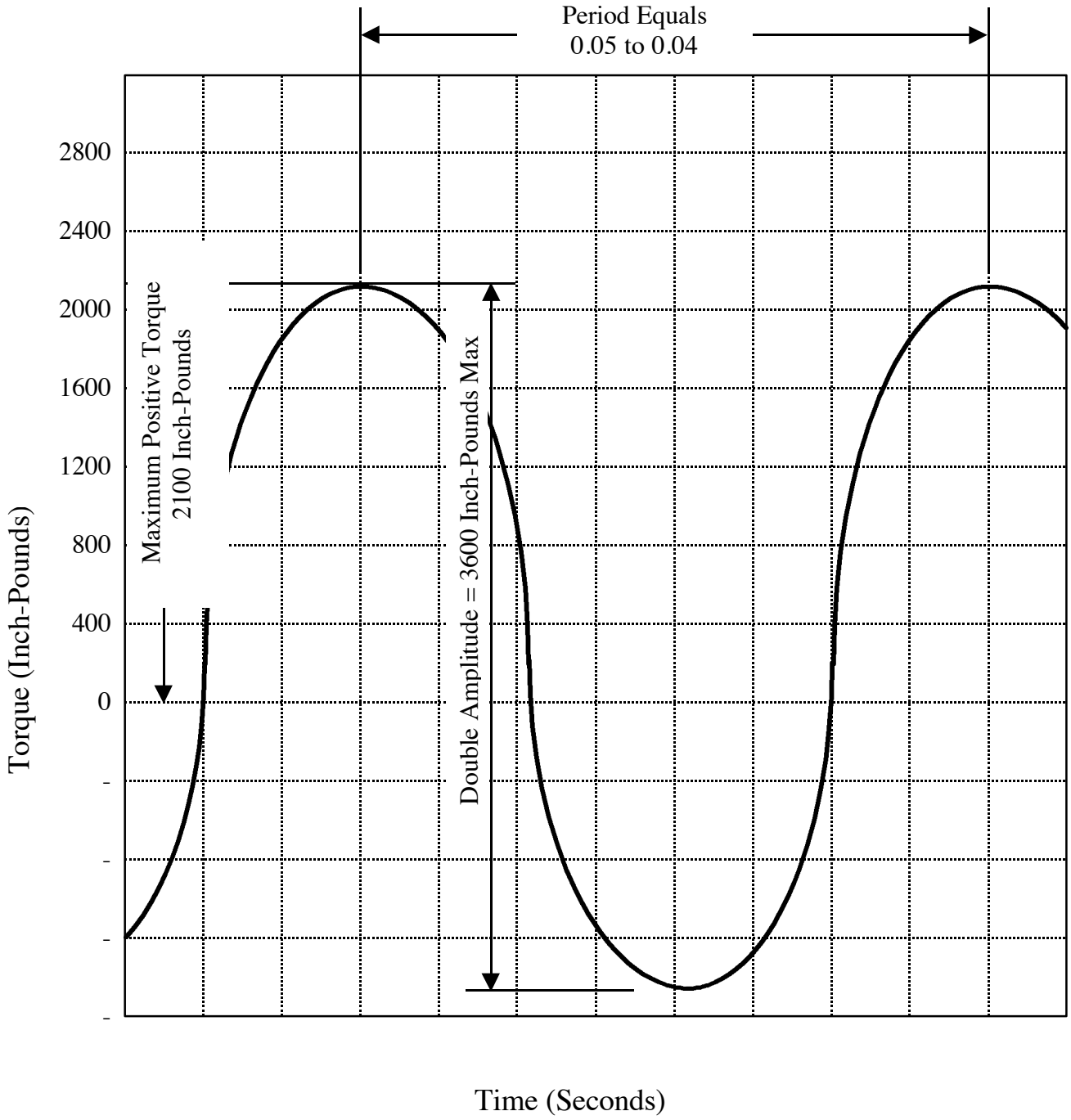

FIGURE 2. Alternator torsional vibration torque requirements.

Downloaded from http://www.everyspec.com

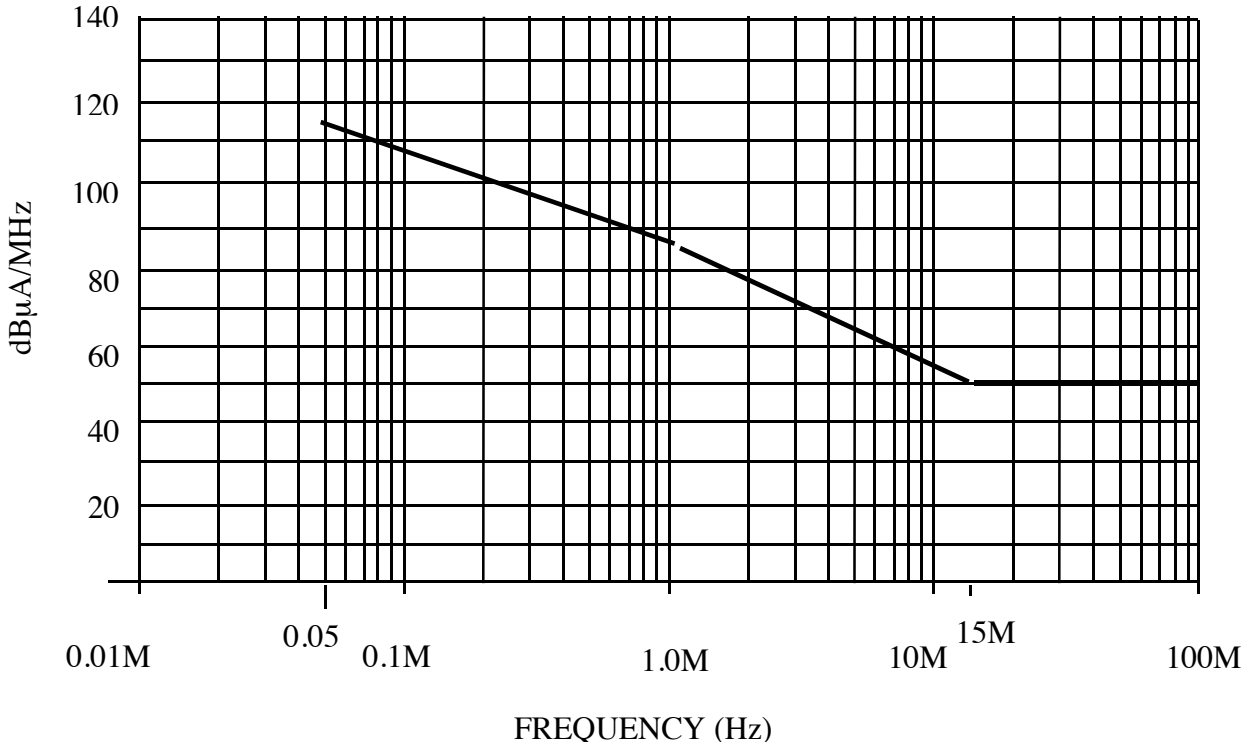

FIGURE 3. Broad band emission limits (conducted EMI).

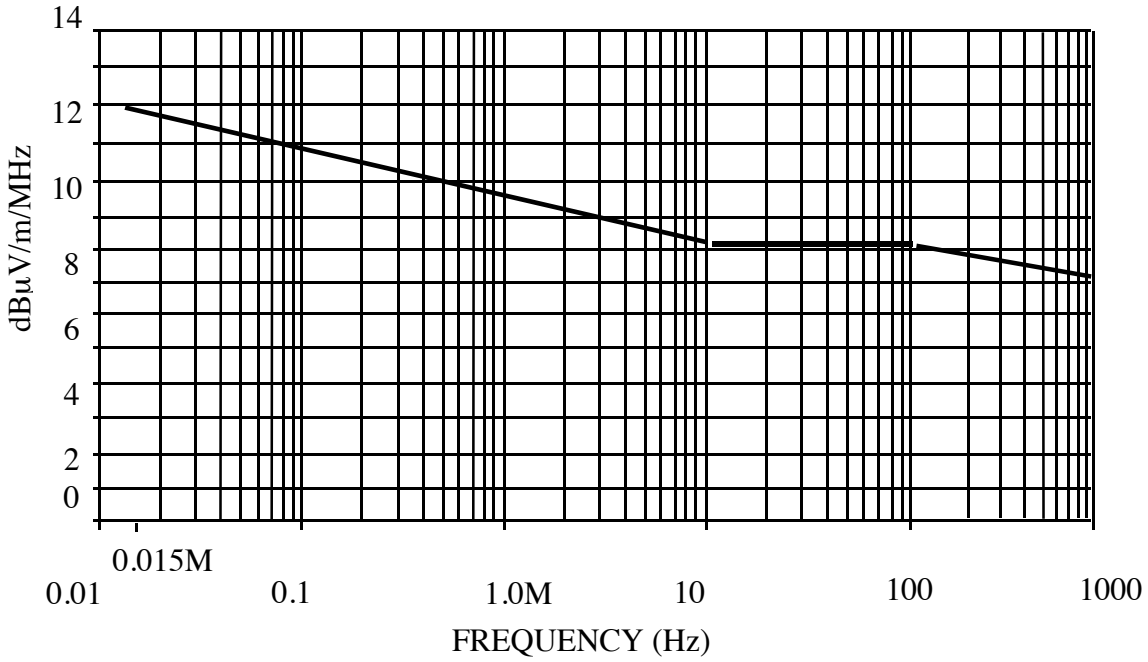

FIGURE 4. Broadband emission limits (radiated EMI).

Downloaded from http://www.everyspec.com

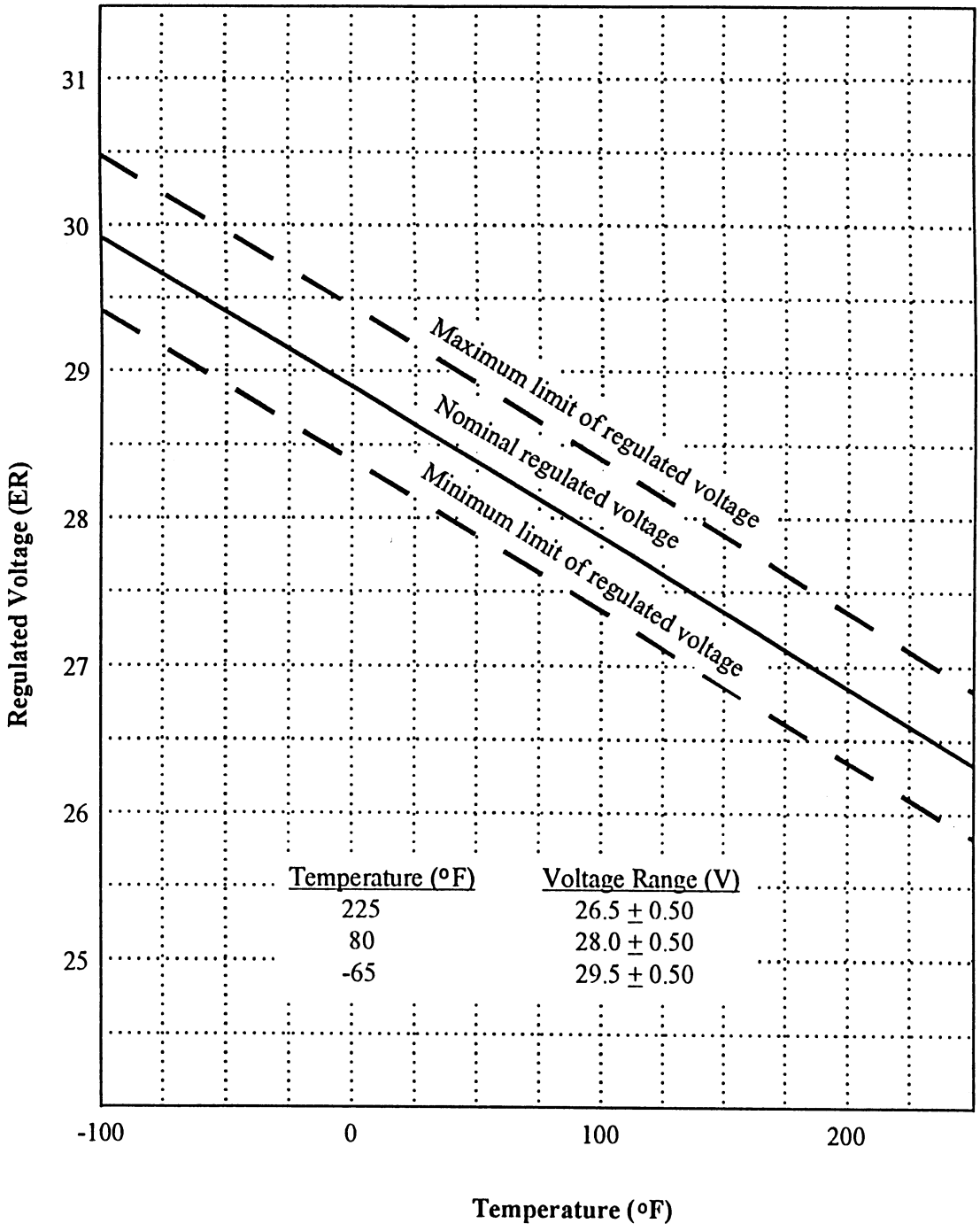

FIGURE 5. Temperature compensation.

Downloaded from http://www.everyspec.com

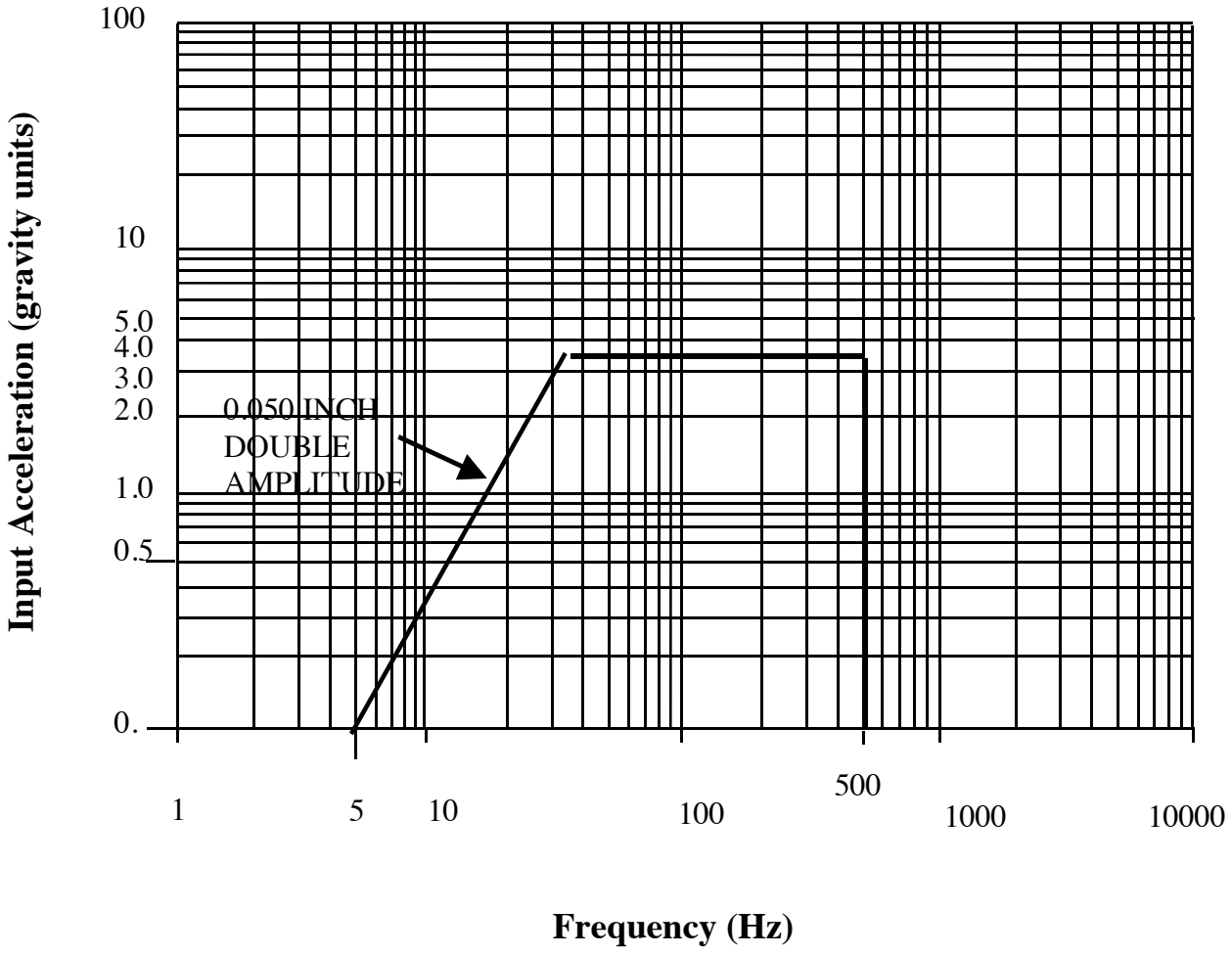

FIGURE 6. Vibration input (vertical) oil cooled alternator.

Downloaded from http://www.everyspec.com

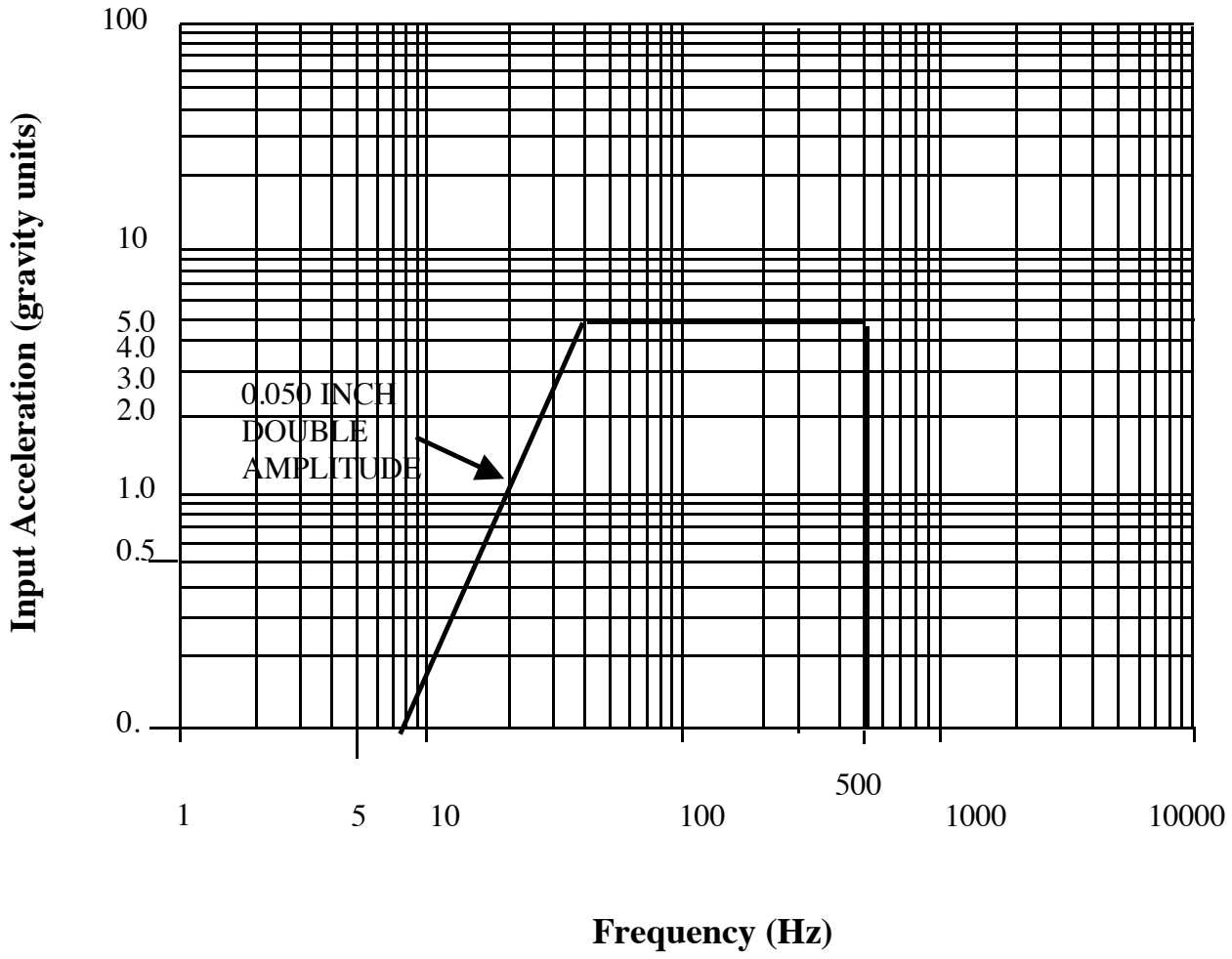

FIGURE 7. Vibration input (longitudinal) oil cooled alternator.

Downloaded from http://www.everyspec.com

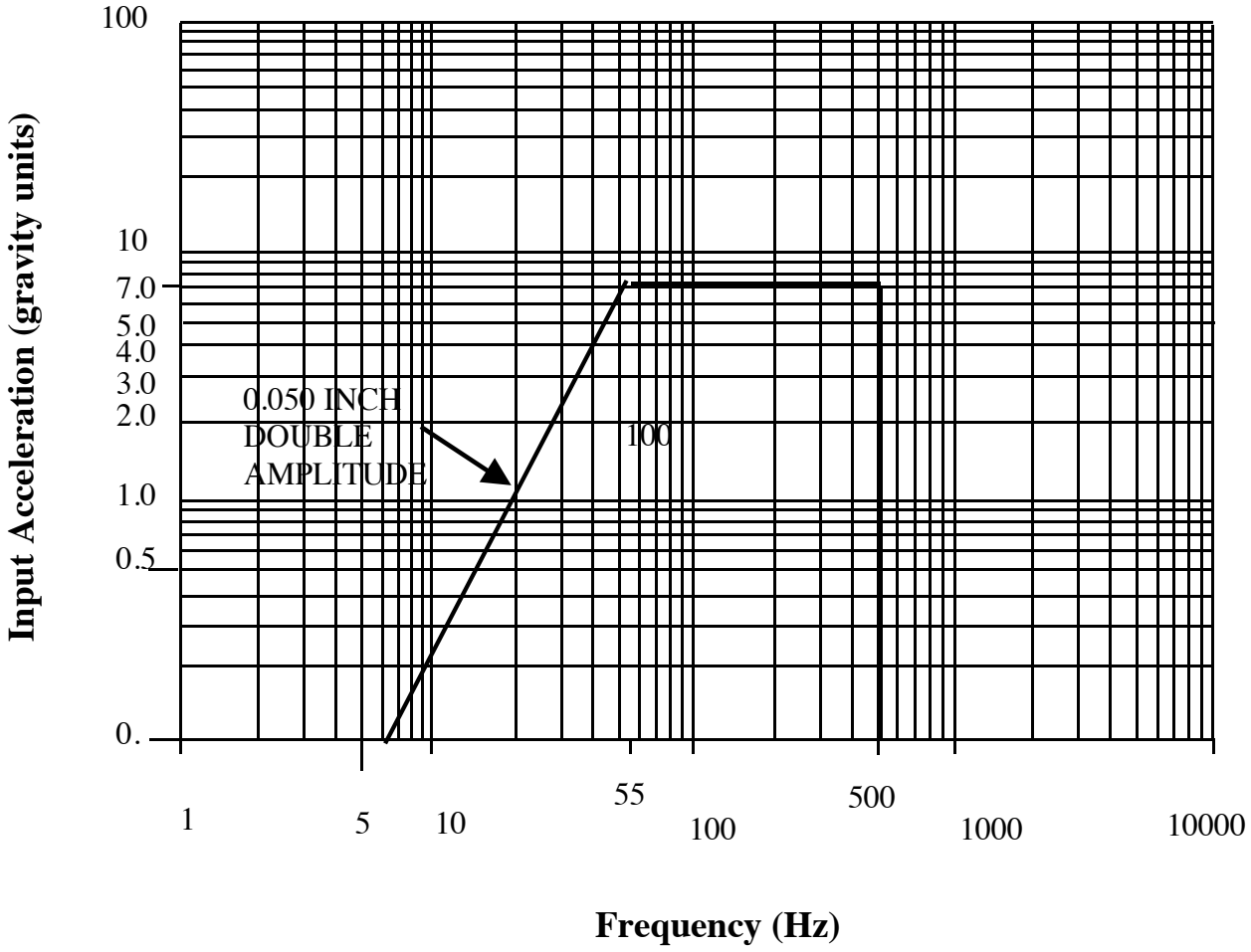

FIGURE 8. Vibration input (horizontal) oil cooled alternator.

Downloaded from http://www.everyspec.com

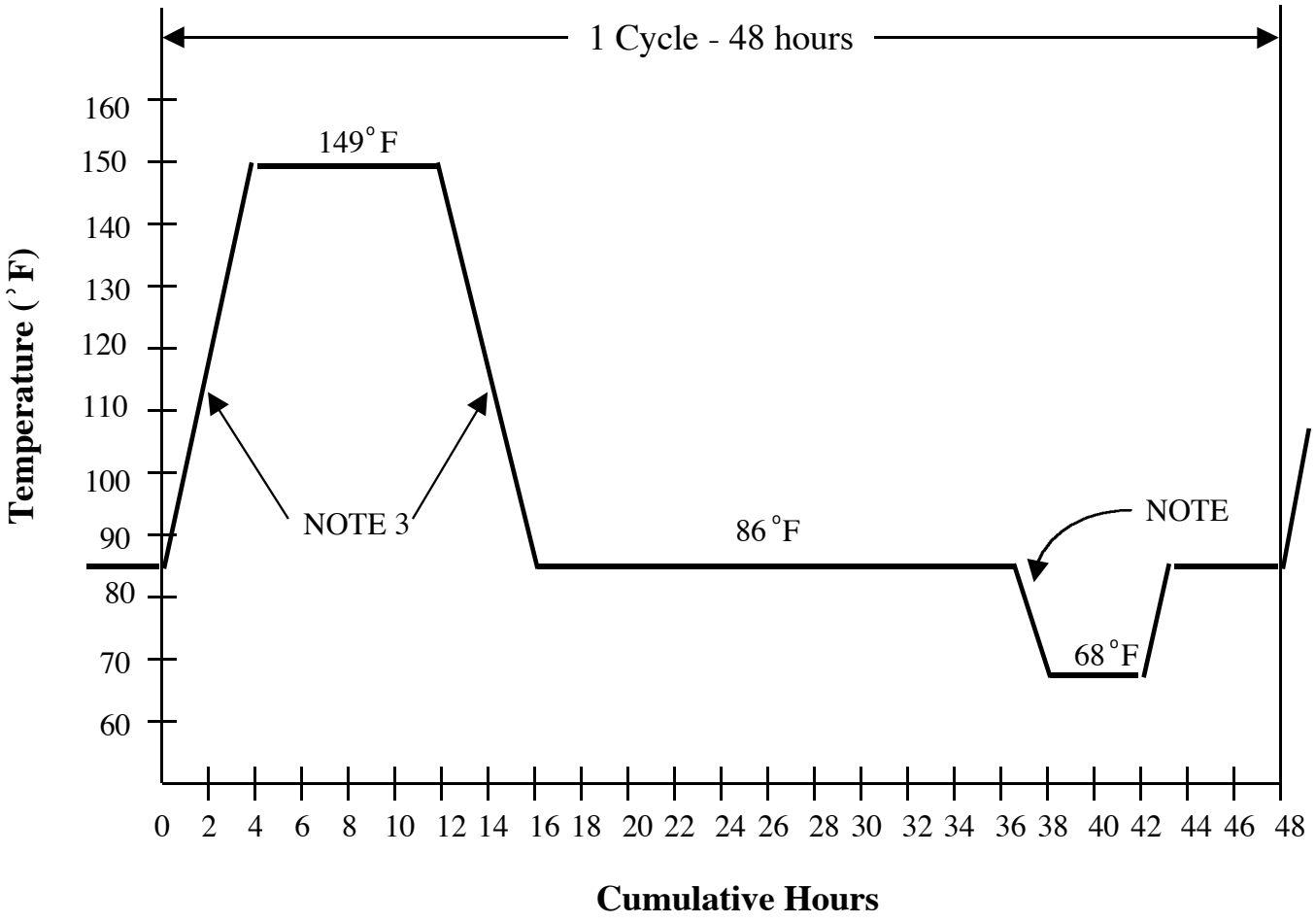

FIGURE 9. Humidity cycle.

Downloaded from http://www.everyspec.com

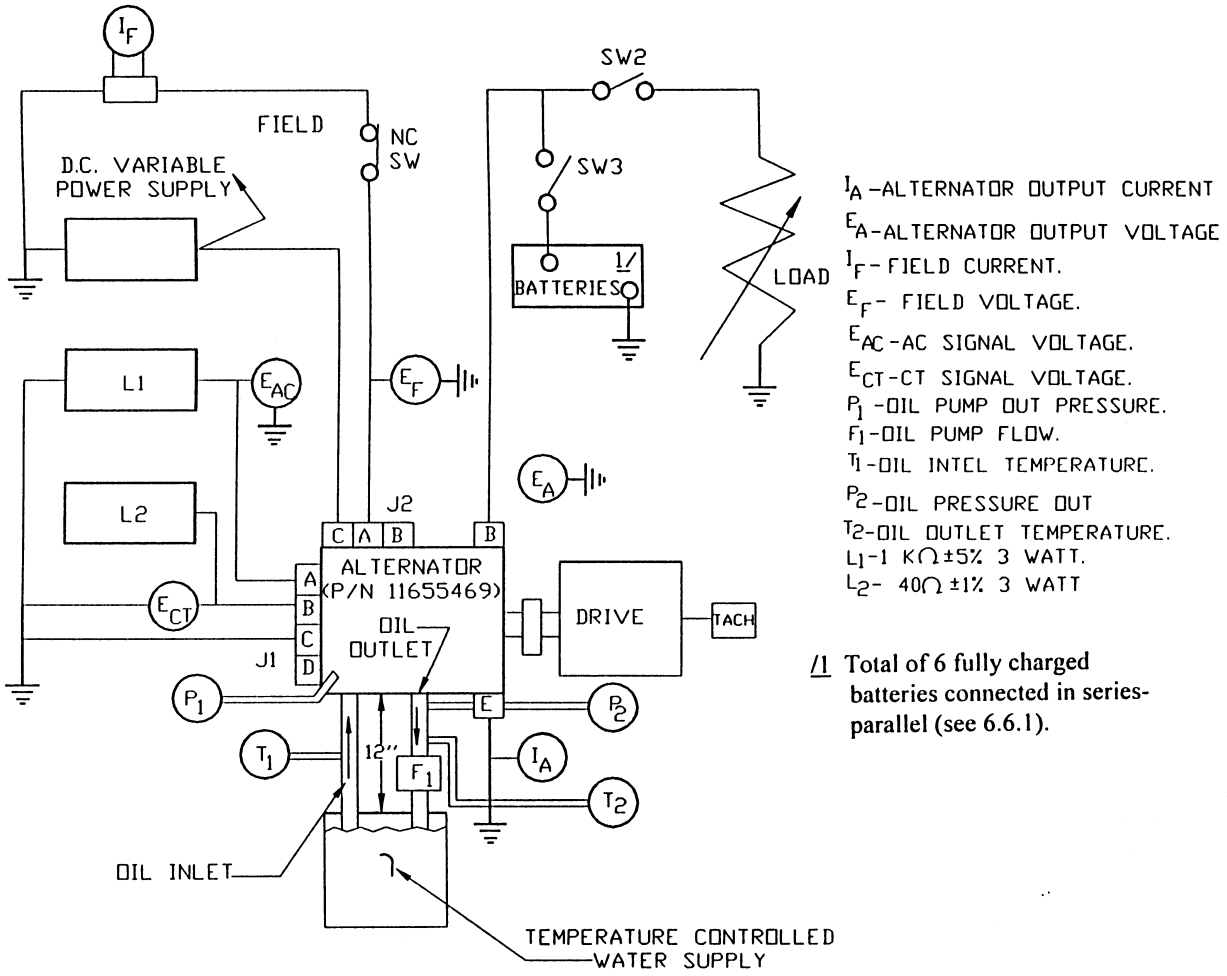

FIGURE 10. Oil cooled alternator test circuit.

Downloaded from http://www.everyspec.com

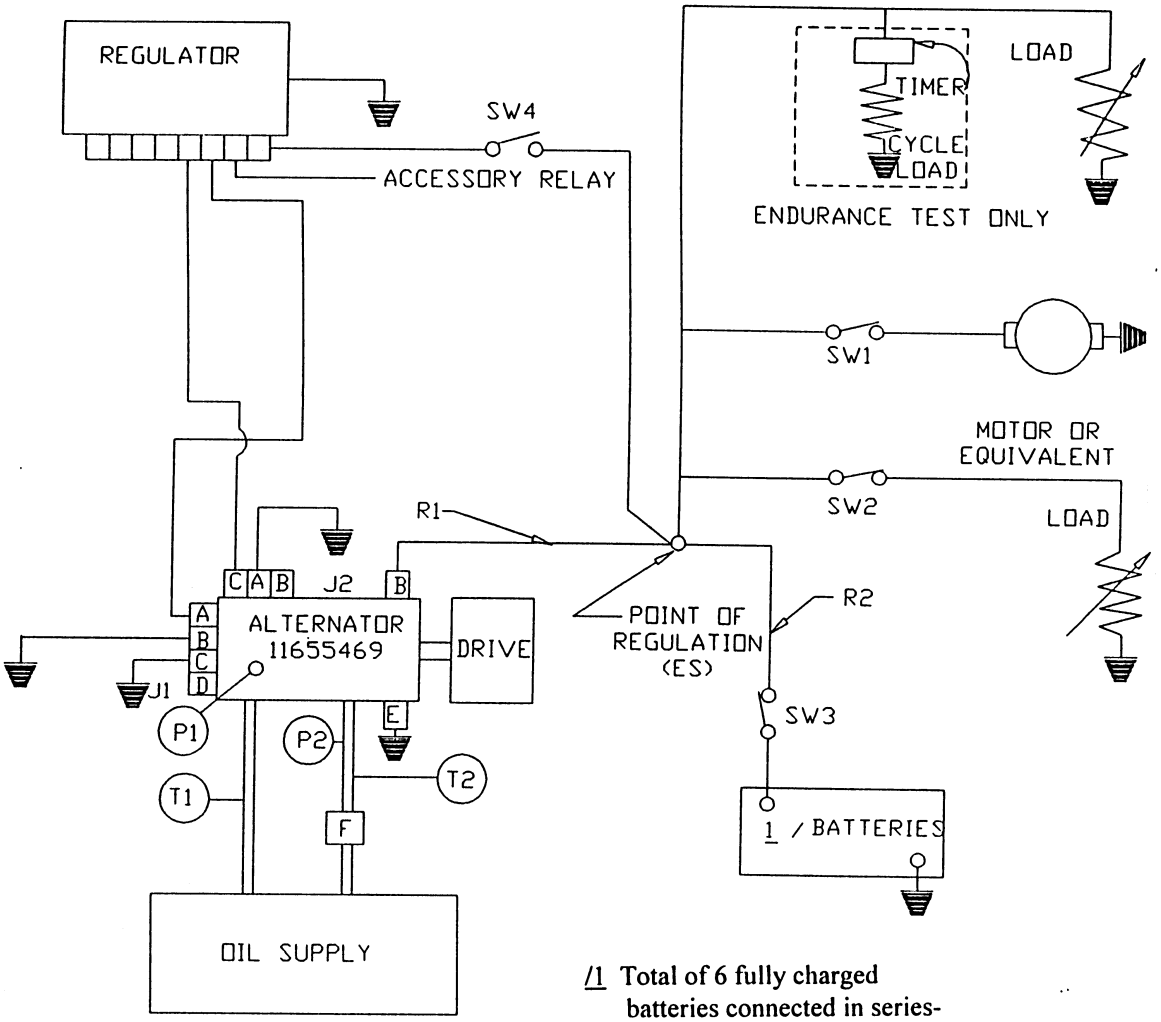

/1 Total of 6 fully charged batteries connected in series-parallel (see 6.6.1).

R1 - RESISTANCE EQUIVALENT TO 2 PARALLEL COPPER CABLES. #00 GAGE, 17.5 FEET LONG.
R2 - RESISTANCE EQUIVALENT TO 2 PARALLEL COPPER CABLES. #00 GAGE, 30 INCHES LONG.

FIGURE 11. Oil cooled alternator test circuit with regulator.

Downloaded from http://www.everyspec.com

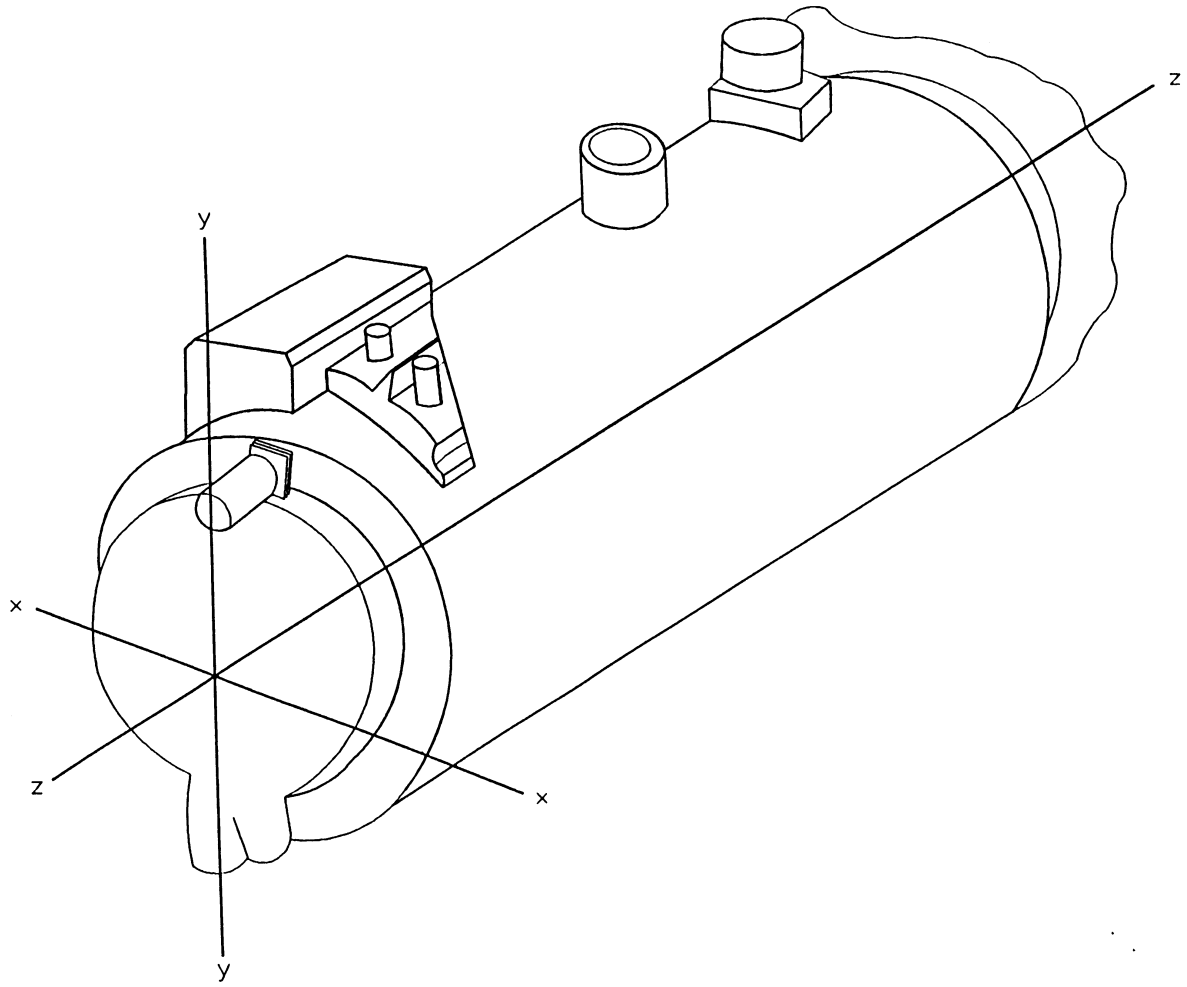

X - Horizontal
Y - Vertical
Z - Longitudinal

FIGURE 12. Orientation of vibration axes.

Downloaded from http://www.everyspec.com

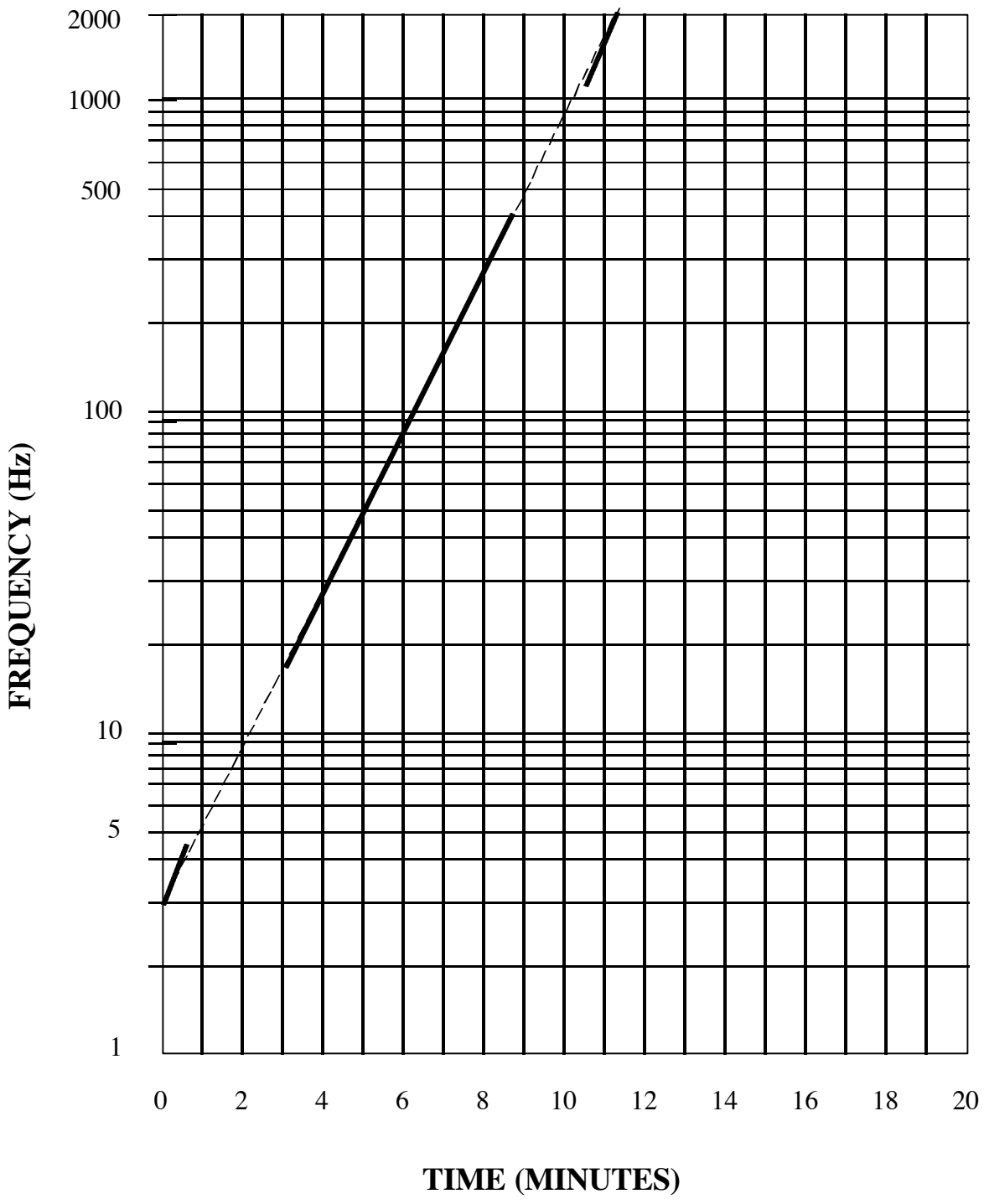

FIGURE 13. Logarithmic sweep.

Downloaded from http://www.everyspec.com

Custodians:
Army - AT
Air Force - 99

Preparing Activity:
Army - AT

(Project 6115-0761)

Downloaded from http://www.everyspec.com

STANDARDIZATION DOCUMENT IMPROVEMENT PROPOSAL

INSTRUCTIONS

1. The preparing activity must complete blocks 1, 2, 3, and 8. In block 1, both the document number and revision letter should be given.
2. The submitter of this form must complete blocks 4, 5, and 7.
3. The preparing activity must provide a reply within 30 days from receipt of the form.

NOTE: This form may not be used to request copies of documents, nor to request waivers, or clarification of requirements on current contracts. Comments submitted on this form do not constitute or imply authorization to waive any portion of the referenced document(s) or to amend contractual requirements.

I RECOMMEND A CHANGE:	1. DOCUMENT NUMBER	2. DOCUMENT DATE *(YYMMDD)*
	MIL-DTL-62186B	990106

3. DOCUMENT TITLE

GENERATOR, ALTERNATING CURRENT (650 AMPERE RECTIFIED), 28 VOLTS DIRECT CURRENT (OIL COOLED)

4. NATURE OF CHANGE ***(Identify paragraph number and include proposed rewrite, if possible. Attach extra sheets as needed.)***

5. REASON FOR RECOMMENDATION

6. SUBMITTER

a. NAME *(Last, First, Middle Initial)*	b. ORGANIZATION	
c. ADDRESS *(Include Zip Code)*	d. TELEPHONE *(Include Area Code)* (1) Commercial (2) AUTOVON *(If applicable)*	7. DATE SUBMITTED *(YYMMDD)*

8. PREPARING ACTIVITY

a. NAME	b. TELEPHONE *(Include Area Code)* (1) Commercial (810) 574-8745	(2) AUTOVON 786-8745
c. ADDRESS *(Include Zip Code)* Commander U.S. Army Tank-automotive and Armaments Command ATTN: AMSTA-TR-E/BLUE Warren, MI 48397-5000	IF YOU DO NOT RECEIVE A REPLY WITHIN 45 DAYS, CONTACT: Defense Quality and Standardization Office 5203 Leesburg Pike, Suite 1403 Falls Church, VA 22041-3466 Telephone (703) 756-2340 AUTOVON 289-2340	