INCH-POUND
MIL-DTL-52618/2E
26 January 2012
SUPERSEDING
MIL-DTL-52618/2D
25 November 2002

DETAIL SPECIFICATION SHEET

FITTINGS, PIPE, ALUMINUM-ALLOY THREADED, 150-POUND, REDUCERS AND CLOSE AND OPEN PATTERN RETURN BENDS (STRAIGHT SIZES)

This specification is approved for use by all Departments and Agencies of the Department of Defense.

The requirements for acquiring the product described herein shall consist of this specification sheet and MIL-DTL-52618.

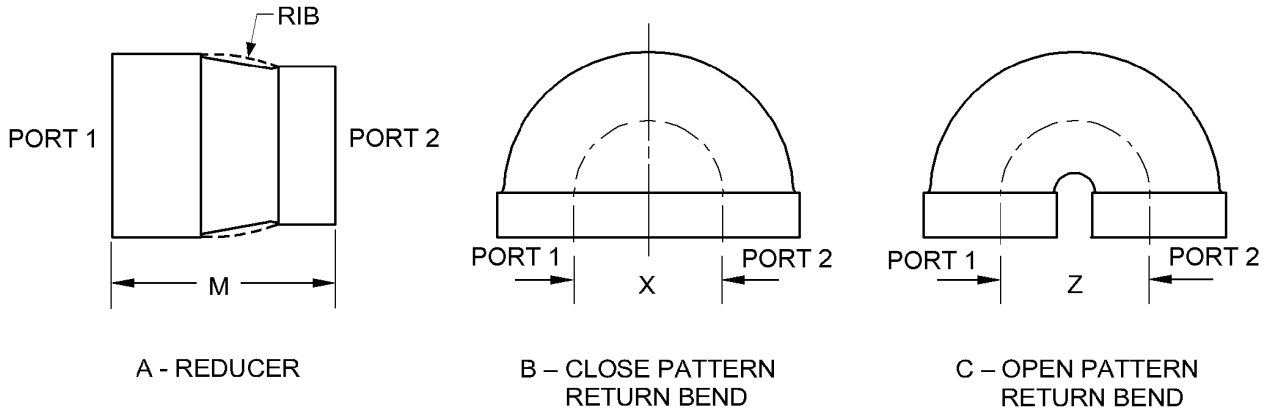

FIGURE 1. Reducer, closed and open return bend.

Requirements

The fittings shall be as specified on figure 1.

Intended use is with water, oil, or air 150 psi (1.03 MPa) max at 72°F (22°C).

The design, dimensions, and tolerances of reducers and bends shall be in accordance with AMSE B16.3.

Aluminum shall be in accordance with MIL-DTL-52618.

Configuration designators shall be in accordance with table I.

TABLE I. Configuration code letter for fittings, (see figure A).

Configuration code	Description
F	Reducers
G	Close pattern return bend
H	Open pattern return bend

Size code numbers for reducers shall be in accordance with table II.

TABLE II. Size code numbers for reducers.

Size code numbers	Nominal pipe size (inch) X (inch)		
	Port 1		Port 2
24	1/2	X	3/8
25	1/2	X	1/4
26	3/4	X	1/2
27	3/4	X	3/8
28	3/4	X	1/4
29	1	X	3/4
30	1	X	1/2
31	1-	X	1
32	1-	X	3/4
33	1-	X	1-1/4
34	1-	X	1
35	1-	X	3/4
36	2	X	1-1/2
37	2	X	1-1/4
38	2	X	1
39	2-	X	2
40	3	X	2-1/2
41	3	X	2
42	4	X	3

Size code numbers for return bends shall be in accordance with table III.

TABLE III. Size code numbers for close and open pattern return bends (see figures B and C).

Size code numbers	Nominal pipe size (inch)
04	1/2
05	3/4
06	1
07	1-1/4
08	1-1/2
09	2
10	2-1/2
11	3
12	3-1/2
13	4
14	5
15	6
16	8
17	10
18	12

Pipe threads shall be in accordance with MIL-DTL-52618.

Pipe thread direction code shall be in accordance with table IV.

TABLE IV. Thread direction code letter.

Thread direction code letter	Thread direction
X	Right-hand
Y	Left-hand
Z	Right- and left-hand

Finish shall be in accordance with MIL-DTL-52618.

Finish code letter shall be in accordance with table V.

TABLE V. Finish code letter.

Finish code Letter	Finish
A	As cast
B	As extruded
C	Anodized

Part or Identifying Number (PIN). The PIN consists of the letter M, specification sheet number, a dash, configuration code letter, size code numbers, thread direction code letter and finish code letter. PIN numbers are assigned as follows:

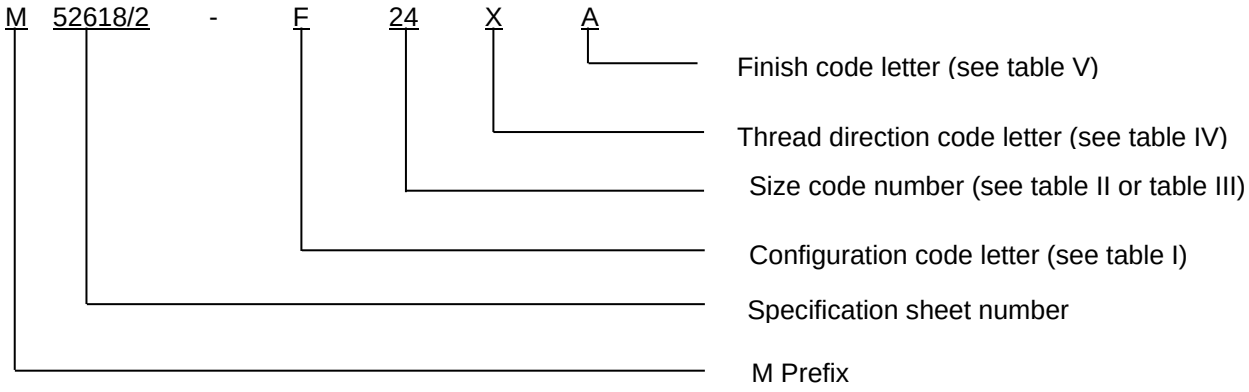

PIN example: M52618/2-F24XA indicates a reducer 1/2 to 3/8 inch, right hand threads, and finish is "as cast".

Changes from previous issue. Marginal notations are not used in this revision to identify changes with respect to the previous issue due to the extent of the changes.

Referenced documents. In addition to MIL-DTL-52618, this document references ASME B16.3.

CONCLUDING MATERIAL

Custodians:
Army - AT
Navy - AS
DLA - CC

Preparing activity:
DLA - CC

Review activities:
Army - CE
Navy - MC, SA

(Project 4730-2012-011)

NOTE: The activities listed above were interested in this document as of the date of this document. Since organizations and responsibilities can change, you should verify the currency of the information above using the ASSIST Online database at https://assist.daps.dla.mil.