Downloaded from http://www.everyspec.com

INCH-POUND

MIL-DTL-45916C
11 August 2014
SUPERSEDING
MIL-I-45916B
24 July 1975

DETAIL SPECIFICATION

INSERT, SCREW THREAD - THREAD CUTTING AND THREAD FORMING

This specification is approved for use by all Departments and Agencies of the Department of Defense.

1. SCOPE

1.1 Scope. This specification covers solid bushing screw thread inserts having thread cutting and thread forming external threads (see 6.1).

1.2 Classification. Inserts shall be furnished in the following types, as specified (see 6.2).

Type I - Thread cutting, regular wall.
Type IA - Thread cutting, thin wall.
Type II - Thread forming.

2. APPLICABLE DOCUMENTS

2.1 General. The documents listed in this section are specified in sections 3 and 4 of this specification. This section does not include documents cited in other sections of this specification or recommended for additional information or as examples. While every effort has been made to ensure the completeness of this list, document users are cautioned that they must meet all specified requirements of documents cited in sections 3 and 4 of this specification, whether or not they are listed.

2.2 Government documents.

2.2.1 Specifications, standards, and handbooks. The following specifications and standards form a part of this document to the extent specified herein. Unless otherwise specified, the issues of these documents are those cited in the solicitation or contract.

FEDERAL STANDARDS

FED-STD-H28 Screw-Thread Standards for Federal Service

Comments, suggestions, or questions on this document should be addressed to Defense Supply Center Philadelphia (DSCP), ATTN: DSCP-NASA, 700 Robbins Avenue, Philadelphia, PA 19111-5096 or e-mail to dscpg&ispecomments@dla.mil . Since contact information can change, you may want to verify the currency of this address information using the ASSIST Online database at https://assist.dla.mil .

Downloaded from http://www.everyspec.com

DEPARTMENT OF DEFENSE SPECIFICATIONS

MIL-F-495	Finish, Chemical, Black, for Copper Alloys
MIL-A-8625	Anodic Coatings for Aluminum and Aluminum Alloys
MIL-DTL-5541	Chemical Conversion Coatings on Aluminum and Aluminum Alloys
MIL-PRF-46010	Lubricant, Solid Film, Heat Cured, Corrosion Inhibiting NATO Code - S - 1738

DEPARTMENT OF DEFENSE STANDARDS

MS35914	Insert, Screw Thread - Thread Cutting
MS51836	Insert, Screw Thread - Thread Forming
MS51837	Insert, Screw Thread - Thread Forming Hole Dimensions for and Installation of

(Copies of these documents are available online at http://quicksearch.dla.mil/ or from the Standardization Document Order Desk, 700 Robbins Avenue, Building 4D, Philadelphia, PA 19111-5094.)

2.3 Non-Government publications. The following documents form a part of this document to the extent specified herein. Unless otherwise specified, the issues of these documents are those cited in the solicitation or contract.

AMERICAN SOCIETY OF MECHANICAL ENGINEERS

ASME-B46.1	Surface Texture(Surface Roughness, Waviness, and Lay)

(Copies of this document are available from www.asme.org American Society of Mechanical Engineers, Three Park Avenue, M/S 10E, New York, NY 10016-5990.)

AMERICAN SOCIETY FOR QUALITY (ASQ)

ASQ Z1.4	Sampling Procedures and Tables for Inspection by Attributes.

(Copies of this document are available from www.asq.org American Society for Quality Control, 600 North Plankinton Avenue, Milwaukee, WI 53203.)

AMERICAN SOCIETY FOR TESTING AND MATERIALS (ASTM)

ASTM B16/B16M	Standard Specification for Free-Cutting Brass Rod, Bar and Shapes for Use in Screw Machines
ASTM B26/B26M	Standard Specification for Aluminum-Alloy Sand Casting
ASTM B36/B36M	Standard Specification for Plate, Brass, Sheet, Strip, and Rolled Bar
ASTM B121/B121M	Standard Specification for Plate, Leaded Brass, Sheet, Strip, and Rolled Bar
ASTM B928/B928M	Standard Specification for High Magnesium Aluminum-Alloy Sheet and Plate for Marine Service and Similar Environments
ASTM E10	Standard Test Method for Brinell Hardness of Metallic Materials
ASTM E18	Standard Test Methods for Rockwell Hardness of Metallic Materials
ASTM E1282	Standard Guide for Specifying the Chemical Compositions and Selecting Sampling Practices and Quantitative Analysis Methods for Metals, Ores, and Related Materials
ASTM E1417/E1417M	Standard Practice for Liquid Penetrant Testing

Downloaded from http://www.everyspec.com

ASTM E1444/E1444M	Standard Practice for Magnetic Particle Testing
ASTM F1941	Standard Specification for Electrodeposited Coatings on Threaded Fasteners (Unified Inch Screw Threads (UN/UNR))

(Copies of these documents are available from www.astm.org or the American Society for Testing and Materials, 100 Barr Harbor Drive, West Conshohocken, PA 19428-2959.)

SOCIETY OF AUTOMOTIVE ENGINEERS (SAE)

SAE AIR4127	Steel: Chemical Composition and Hardenability
SAE AMS2700	Passivation of Corrosion Resistant Steels
SAE AMS-QQ-P-416	Plating, Cadmium (Electrodeposited)

(Copies of these documents are available from www.sae.org or the Society of Automotive Engineers, Inc., 400 Commonwealth Drive, Warrendale, PA 15096-0001.)

2.4 Order of precedence. Unless otherwise noted herein or in the contract, in the event of a conflict between the text of this document and the references cited herein, the text of this document takes precedence. Nothing in this document, however, supersedes applicable laws and regulations unless a specific exemption has been obtained.

3. REQUIREMENTS

3.1 Material. Unless otherwise specified (see 6.2), inserts shall be made of the materials specified herein.

3.1.1 Carbon steel. Carbon steel shall be in accordance with SAE AIR4127, as specified in MS35914 and MS51836.

3.1.2 Corrosion-resisting steel. Corrosion-resisting steel shall be type 303 in accordance with SAE AIR4127, as specified in MS35914 and MS51836.

3.1.3 Brass. Brass shall be in accordance with ASTM B16/B16M, ASTM B36/B36M or ASTM B121/B121M, as specified in MS51836.

3.2 Protective coating. Inserts shall be furnished with one of the following protective finishes.

3.2.1 Cadmium plating. Carbon steel inserts shall be cadmium plated in accordance with SAE AMS-QQ-P-416, Type II, Class 3.

3.2.2 Passivation. Corrosion-resisting steel inserts shall be passivated in accordance with SAE AMS2700.

3.2.3 Black Chemical. Brass inserts shall have a black chemical finish in accordance with MIL-F-495.

3.2.4 Zinc Nickel plating. As an alternative to Cadmium plating, carbon steel inserts may be ZnNi plated in accordance with ASTM F1941 Fe/Zn-Ni 8ET alkaline zinc nickel electroplate, 12%-16% mass percent nickel, with chemical conversion coating per MIL-DTL-5541 TYPE II CLASS 1A.

3.3 Lubrication. Type II inserts with self-locking internal threads shall be solid film lubricated. The lubricant shall be in accordance with MIL-PRF-46010.

3.4 Dimensions. The design, dimensions and tolerances of inserts shall be as specified in MS35914 and MS51836 (see 6.2). Dimensions and tolerances shall apply after application of protective coating and prior to application of lubricant.

Downloaded from http://www.everyspec.com

3.5 Thread locking feature. The locking element for Type I inserts shall be nylon. The insert and internal thread locking devices for Type II inserts shall be an integral, all metal unit. Threads in the area of the locking feature on Type II inserts may be displaced or deformed. The installed insert shall provide a locking torque with the mating screw or bolt within the limits of Table I.

TABLE I. Internal Thread Self-Locking Torque (Inch-Pounds).

Fine Threads			Coarse Threads		
Nominal Size Internal Thread	Maximum Locking Torque	Minimum Breakaway Torque	Nominal Size Internal Thread	Maximum Locking Torque	Minimum Breakaway Torque
*.086-64	2.5	**	.086-56	2.5	**
*.112-48	5	**	.112-40	5	**
*.138-40	10	1.0	.138-32	10	1.0
*.164-36	15	1.5	.164-32	15	1.5
.190-32	18	2.0	.190-24	18	2.0
.250-28	30	3.5	.250-20	30	4.5
.3125-24	60	6.5	.3125-18	60	7.5
.375-24	80	9.5	.375-16	80	12.0
*.4375-20	100	14.0	*.4375-14	100	16.5
.500-20	150	18.0	.500-13	150	24.0
*.5625-18	200	24.0	*.5625-12	200	30.0
.625-18	300	32.0	.625-11	300	40.0
.750-16	400	50.0	.750-10	400	60.0

* Inactive for new design.
** Some indication of torque.

3.6 Threads. All threads shall be right hand.

3.6.1 Internal threads. Internal threads shall be in accordance with FED-STD-H28 and as specified in MS35914 and MS51836. Thread gaging shall be performed after application of protective coating and prior to application of the lubricant. When a locking feature is employed, the GO plug gage shall enter a minimum of 3/4 turn before engaging the locking device. When the application of a lubricant on Type II inserts prevents the use of standard gages, the inserts shall permit a minimum free rotational bolt thread engagement of 3/4 turn before engaging the locking device.

3.6.2 External threads. External threads shall be a special form to permit a self-threading action when the insert is installed. External threads shall be as specified on MS35914 and MS51836.

3.6.3 Lead threads. Internal lead threads shall not exceed two pitches, including chamfer.

3.6.4 Concentricity. For Types I and IA, the internal thread pitch diameter shall be concentric with the external pitch diameter within 0.004 TIR for sizes up to and including 0.190, and 0.006 TIR for sizes larger than 0.190 internal thread. For Type II inserts, the internal thread pitch diameter shall be concentric with the external pitch diameter within 0.006 TIR.

3.7 Surface roughness. The surface roughness of the inserts prior to protective coating shall not exceed 125 micro-inches in accordance with ASME B46.1.

3.8 Mechanical properties.

3.8.1 Pullout resistance. Type I and II inserts shall withstand the pullout strengths specified in Table II with no failure of either the insert or parent material and shall have no elongation on excess of 2%.

Downloaded from http://www.everyspec.com

3.8.1.2 Type IA inserts shall withstand 90% of the Type I and II torque-out strengths specified in Table II.

3.8.2 Rotational resistance (torque-out). Type I and II inserts shall withstand the torque-out strengths specified in Table II with no failure of either the insert or parent material.

3.8.2.1 Type IA inserts shall withstand 90% of the Type I and II torque-out strengths specified in Table II.

TABLE II. Pullout Resistance and Rotational Resistance (Torque-Out).

Nominal Size Internal Thread	Type I			Type II		
	Insert Length (Inch)	Pullout Strength (Lbs)	Torque-Out Strength (Inch-Lbs)	Insert Length (Inch)	Pullout Strength (Lbs)	Torque-Out Strength (Inch-Lbs)
.086	.188	990	5	.190	700	5
	.156	790	4	.160	490	4
	.125	595	3	.120	350	3
.112	.234	1,530	8	.230	1,100	8
	.187	1,225	6	.190	825	5
	.156	920	5	.160	560	4
.138	.281	2,390	13	.280	1,720	13
	.218	1,910	10	.220	1,160	7
	.187	1,435	8	.190	975	5
.164	.328	3,300	18	.330	2,100	18
	.250	2,640	14	.250	1,300	12
	.218	1,980	10	.220	1,200	8
.190	.375	4,325	30	.370	3,500	30
	.296	3,460	24	.300	2,200	19
	.250	2,595	18	.250	1,750	14
.250	.484	7,100	40	.490	5,400	40
	.375	5,680	32	.370	2,900	30
	.312	4,260	24	.310	2,050	20
.3125	.562	10,400	75	.560	6,700	75
	.469	8,320	60	.470	3,900	50
	.375	6,240	45	.370	2,850	30
.375	.687	15,790	120	.680	8,100	120
	.562	12,630	104	.560	6,300	70
	.437	9,475	72	.440	4,900	50
.4375	.781	20,400	160			
.500	.906	26,800	200			
	.750	21,440	160			
	.562	16,080	120			
.5625	1.000	31,800	250			
.625	1.125	41,800	350			
	.937	33,440	280			
	.687	25,080	210			
.750	1.375	61,300	500			
	1.125	49,040	400			
	.812	36,780	300			

Note:
Type I inserts tested in 356T6 Aluminum alloy.

Type II inserts tested in 5083-H321 Aluminum alloy.

3.8.3 Hardness. Inserts shall have a hardness range as specified in MS35914 and MS51836.

3.9 Discontinuities. Inserts shall contain no discontinuities which exceed the following limitations. When visual inspection discloses discontinuities which show cause for further examination, magnetic particle or penetrant inspection, as applicable shall be performed as specified in 4.5.2.

Downloaded from http://www.everyspec.com

3.9.1 Cracks. Inserts shall be free from cracks in any direction or location.

3.9.2 Laps and seams (Figure 1). Threads shall have no laps or seams at the root or along the flanks. Laps and seams are permissible at the crest and on the flanks outside the pitch diameter, but shall not exceed 25% of the basic thread depth.

3.9.3 Surface irregularities. Slight deviation from the thread contour is permissible at the crest of the thread as shown in Figure 1. The incomplete thread at each end of the thread may deviate slightly from contour.

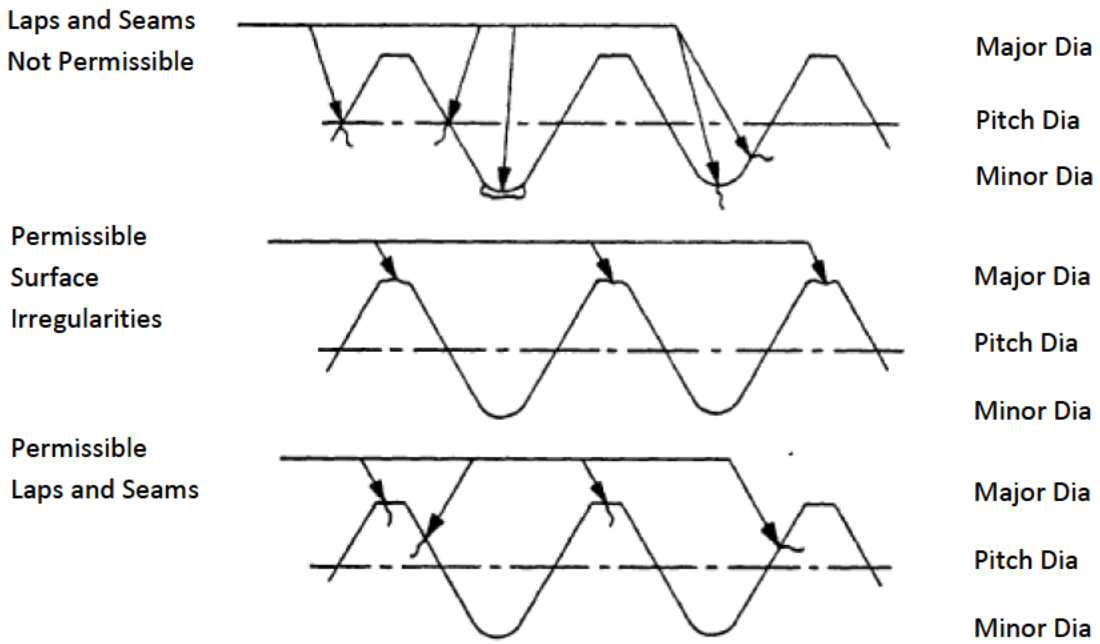

FIGURE 1. Thread Discontinuities.

3.9.4 Inclusions. Inserts shall show no evidence of surface or subsurface inclusions at the thread root when examined as specified in 4.5.2. Small inclusions in other parts of the inserts, not indicative of unsatisfactory quality, shall not be cause for rejection.

3.10 Workmanship. Inserts shall be of uniform quality and free from surface contamination and other defects which would be detrimental to their proper use.

4. VERIFICATION

4.1 Conformance inspection. Conformance inspection shall include the following.

4.2 Lot. A lot shall consist of finished inserts of the same material, type, size, thread and protective coating, produced under the same conditions and offered for acceptance at one time.

4.3 Sampling.

4.3.1 Sampling for examination. A random sample of inserts shall be selected from each lot in accordance with ASQ Z1.4, Inspection Level S-4.

4.3.2 Sampling for tests. A random sample of inserts shall be selected from each lot in accordance with ASQ Z1.4, Inspection Level S-1.

4.4 Test materials.

Downloaded from http://www.everyspec.com

4.4.1 Test Blocks. Test blocks shall be fabricated as specified in Figures 2 and 3. Larger test blocks for multiple testing of inserts are permissible when proper distance between holes is maintained.

4.4.2 Test bolts and screws. Bolts and screws for use in all tests shall have Class 3A threads. Bolts and screws used for the internal thread self-locking test shall have 125,000 PSI minimum ultimate tensile strength and shall be cadmium plated in accordance with SAE AMS-QQ-P-416, Type II, Class 3. Bolts and screws used for the pullout and rotational resistance tests shall have 180,000 PSI minimum ultimate tensile strength and shall be cadmium plated in accordance with SAE AMS-QQ-P-416, Type II, Class 3.

4.5 Examination. Each insert taken as specified in 4.3.1 shall be examined to verify conformance with this specification. Examination shall be conducted in accordance with Table III. Any insert in the sample containing one or more defects shall be rejected, and if the number of defective inserts in any sample exceeds the acceptance number for that category, the lot represented by the sample shall be rejected.

TABLE III. Classification of Defects.

Category	Defect	Inspection Method
Critical	None defined	
Major		
101	Material (3.1)	Visual
102	Protective coating, missing or incomplete	Visual
103	Lubrication (3.3 & 4.5.1)	Visual & SIE*
104	Dimensions, except length (3.4)	SIE
105	Thread locking feature, missing or incomplete (3.5)	Visual
106	Threads (3.6, 3.6.1 & 3.6.2)	SIE
107	Concentricity (3.6.4 & 4.5.3)	SIE
108	Surface roughness (3.7)	SIE
109	Discontinuities (3.9 & 4.5.2)	Visual & SIE
Minor		
201	Length (3.4)	SIE
202	Lead threads (3.6.3)	Visual
203	Workmanship (3.10)	Visual

*SIE - Standard Inspection Equipment

4.5.1 Lubrication. The solid film lubricant coating used on Type II inserts shall be examined visually and microscopically at 10X magnification for uniformity in color, smoothness and thickness, evidence of cracks, bubbles, blisters, runs, foreign matter, grit, separation of ingredients and any other surface imperfections, and to verify conformance with 3.3.

4.5.2 Discontinuities. Magnetic particle inspection in accordance with ASTM E1444/E1444M for carbon steel and penetrant particle inspection in accordance with ASTM E1417/E1417M for corrosion-resisting steel shall be used to determine the presence of cracks, laps, seams and inclusions. Magnetic particle or penetrant indications alone shall not be cause for rejection, and such inserts shall be sectioned and discontinuities measured microscopically under 10X magnification to determine conformance with 3.9. The inspection shall be performed on finished inserts, free of lubrication and subsequent to any processing operation which could adversely affect the inserts.

Downloaded from http://www.everyspec.com

4.5.3 Concentricity. The internal thread pitch diameter shall be examined for concentricity with the external thread pitch diameter using a comparator and suitable thread form chart. Concentricity shall be checked while rotating the insert and observing the total eccentricity of the external thread pitch diameter relative to the thread chart.

4.6 Tests.

4.6.1 Installation. Each insert taken as specified in 4.3.2 shall be visually inspected under 10X magnification and installed in accordance with MS35914 or MS51837 in test blocks specified in 4.4.1. The presence of cracks in either the test block or the insert as a result of installation shall be cause for rejection. When visual inspection discloses a condition which shows cause for further examination, the test specimen shall be magnetic particle or penetrant inspected in accordance with ASTM E1444/E1444M or ASTM E1417/E1417M.

4.6.2 Internal thread self-locking. Test specimens installed into test blocks (Figure 3) as specified in 4.6.1 shall be used for torque testing of the internal thread locking feature, when applicable. Specimens used for the pullout and rotational resistance tests shall not be used for the self-locking test.

4.6.2.1 Screw-locking torque. The torque test shall consist of a 15 cycle room temperature torque test, using test bolts or screws in accordance with 4.4.2 having sufficient thread length to extend beyond the locking feature a minimum of two pitches (including bolt thread chamfer). A new bolt or screw and a new test specimen shall be used for each complete 15 cycle test. Bolts and screws shall assemble freely, with the fingers, up to the locking feature. The bolt or screw shall be engaged and disengaged from the insert self-locking area for 15 full installation and removal cycles with no axial load on the insert. The test shall be run at a rate slow enough to yield a dependable measure of torque and avoid heating of the bolt. A bolt shall be considered fully installed when two threads extend past the end of the locking feature of the insert; the removal cycle shall be considered complete when the locking feature is disengaged.

4.6.2.2 Maximum locking torque. Maximum locking torque shall be the maximum torque value encountered on any installation or removal cycle, and shall not exceed values specified in Table I. Maximum locking torque readings shall be recorded on the first, seventh and fifteenth installation cycle.

4.6.2.3 Minimum breakaway torque. Minimum breakaway torque shall be the minimum torque required to start removal of the screw or bolt from a fixed position during the first one-half turn of the removal cycle. The torque value for any cycle shall not be less than the applicable value specified in Table I. Minimum breakaway torque reading shall be recorded at the start of the first, seventh and fifteenth removal cycle.

4.6.3 Pullout resistance. Test specimens installed into test blocks (Figure 2), as specified in 4.6.1 shall be used for the pullout resistance test. The test bolt shall assemble freely into the insert, prior to engaging the self-locking device, with finger torque and shall be of sufficient length to extend through the insert a minimum of two pitches (including bolt thread chamfer). The bushing and test block clearance holes in the upper and lower yokes (Figure 4) shall have a free fit not in excess of 0.060 inch greater than the bushing and test block diameters. The bolt clearance hole in the upper bushing (Figure 4) shall be 0.005 to 0.015 inch diameter larger than the nominal diameter of the test bolt. The minimum pullout strength specified in Table II shall then be applied to the assembly. Failure of the insert to stay in the test block or failure of the internal thread shall not occur below the loads specified in Table II. If bolt failure occurs below the applicable pullout strength rating, the test shall be repeated until the minimum pullout strength of the insert is exceeded. Rate of loading shall not exceed 100,000 PSI per minute per square inch based on the shank diameter area of the bolt.

4.6.4 Rotational resistance. Test specimens installed into test blocks (Figure 3), as specified in 4.6.1 shall be used for the rotational resistance test. When the near side face of the insert is installed in accordance with MS35914 or MS51837, the far side of the insert shall extend a distance of one and one-half to two external thread pitches of the insert past the far side of the

Downloaded from http://www.everyspec.com

test block allowing it to fit into the countersink of the bushing. The test bolt or screw specified in 4.4.2 shall enter the insert from the back side (opposite normal entry), and shall be torqued in a clockwise direction. The test assembly shall be as illustrated in Figure 5. Torque-out strengths, with no axial load on the insert, shall not be less than the values specified in Table II.

4.6.5 Hardness. Each insert taken as specified in 4.3.2 shall be hardness tested in accordance with ASTM E10 or ASTM E18 to verify conformance with 3.8.3.

4.7 Chemical analysis. The supplier shall furnish a mill certificate specifying the chemical composition of the material used in the manufacture of the inserts. When specified (see 6.2), chemical analysis shall be in accordance with ASTM E1282.

4.8 Protective coating. Examination and test of protective coatings shall be in accordance with the applicable specification of 3.2.

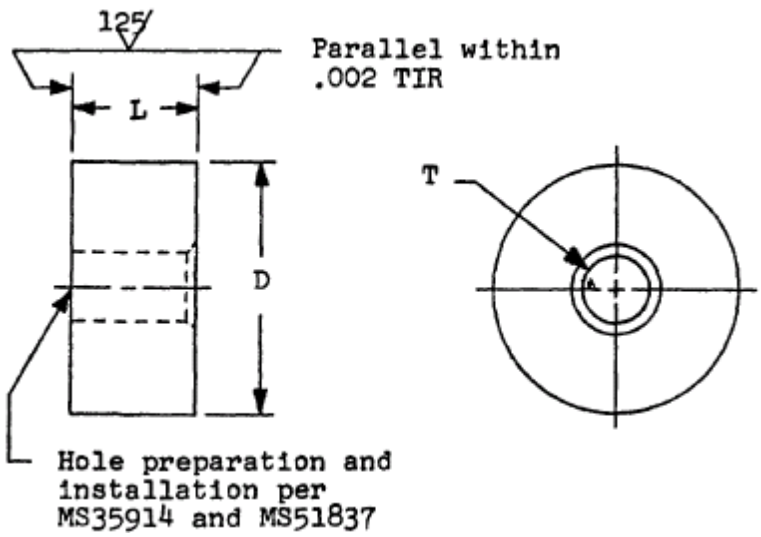

1. Dimensions:

   T - Recommended hole size.
   D - 4 x T or minimum distance between holes.
   L - Insert length plus 0.063 inch.

2. Material:

   Type I and IA inserts - Aluminum alloy, 35T6 per ASTM B26/B26M.
   Type II - Aluminum alloy, 5083-H321 per ASTM B928/B928M.

3. Anodize per MIL-A-8625, Type I or II, Class 1.

4. Discontinuities or cracks are not acceptable.

FIGURE 2. Pullout Test Block.

Downloaded from http://www.everyspec.com

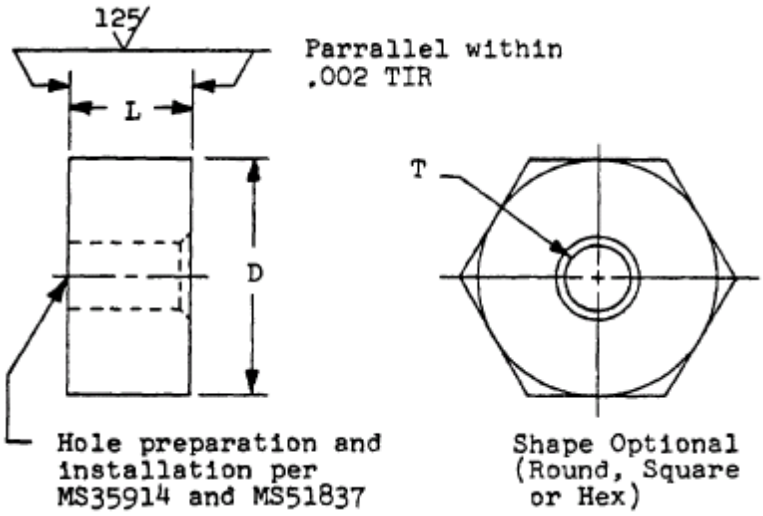

1. Dimensions:

   T - Recommended hole size.
   D - 4 x T or minimum distance between holes.
   L - Insert length minus 0.063 inch for rotational resistance test (4.6.4).
   L - Insert length plus 0.063 inch for internal thread self-locking test (4.6.2).

2. Material:

   Type I and IA inserts - Aluminum alloy, 356T6 per ASTM B26/B26M.
   Type II - Aluminum alloy, 5083-H321 per ASTM B928/B928M.

3. Anodize per MIL-A-8625, Type I or II, Class 1.

4. Discontinuities or cracks are not acceptable.

FIGURE 3. Torque Test Block.

Downloaded from http://www.everyspec.com

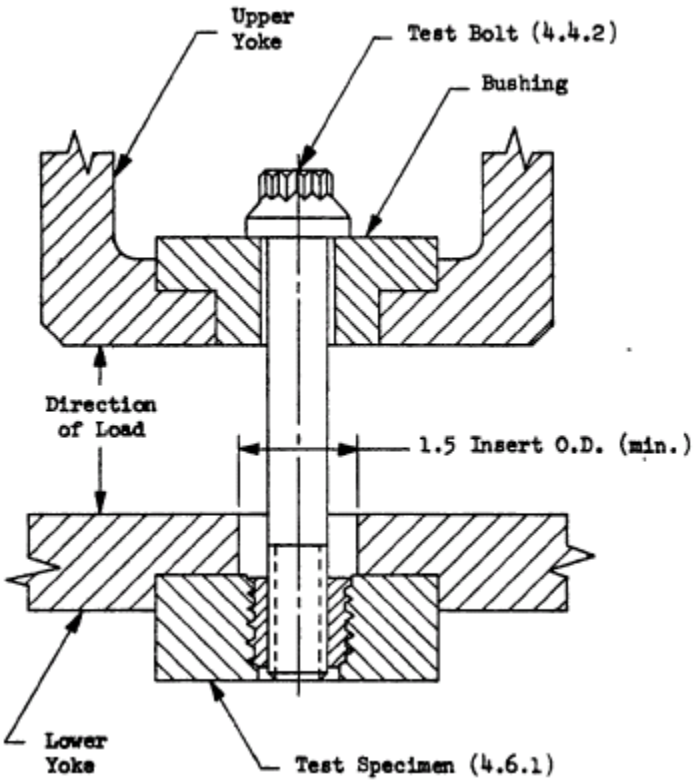

Note: Lower yoke counterbore is optional, but 1.5 Insert O.D. (min) clearance hole shall be maintained.

FIGURE 4. Pullout Resistance Test Fixture (4.6.3).

Downloaded from http://www.everyspec.com

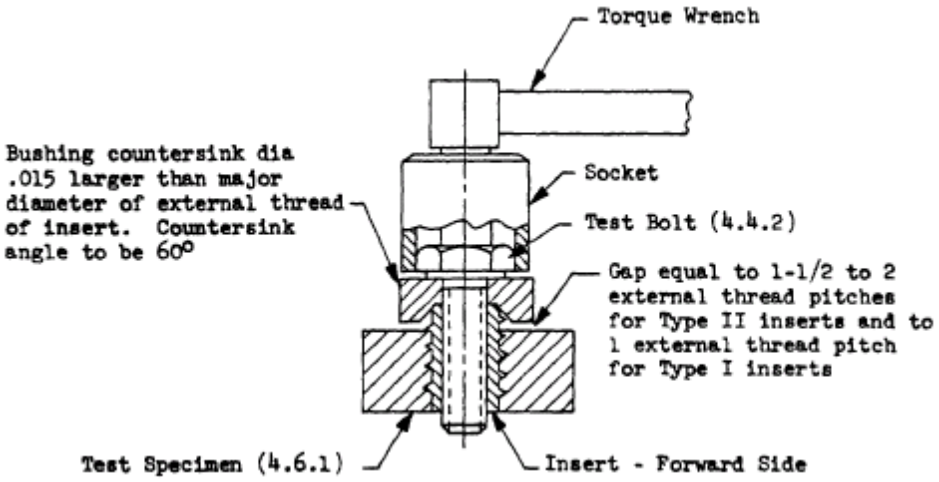

Note: Above test procedure used with insert in the as received condition.

FIGURE 5. Rotational Resistance Test Fixture (4.6.4).

5. PACKAGING

5.1 Packaging. For acquisition purposes, the packaging requirements shall be as specified in the contract or order (see 6.2). When packaging of materiel is to be performed by DoD or in-house contractor personnel, these personnel need to contact the responsible packaging activity to ascertain packaging requirements. Packaging requirements are maintained by the Inventory Control Point's packaging activities within the Military Service or Defense Agency, or within the military service's system commands. Packaging data retrieval is available from the managing Military Department's or Defense Agency's automated packaging files, CD-ROM products, or by contacting the responsible packaging activity.

6. NOTES

(This section contains information of a general or explanatory nature that may be helpful, but is not mandatory.)

6.1 Intended use. Inserts covered by this specification are intended as general purpose fasteners with self-threading external threads of the following types:

Type I and IA inserts are designed to tap their own threads to provide strong wear and thread resistance in soft, weak metals, cast iron, mild steel, plastics and wood.

Type II inserts are designed for use in yielding materials such as aluminum and magnesium alloys, and plastics.

Downloaded from http://www.everyspec.com

6.2 Acquisition requirements. Acquisition documents should specify the following:

a. Title, number and date of this specification.
b. Type (see 1.2).
c. Title, number and date of applicable Military standard(s) (see 3.4).
d. Applicable MS part number (see 3.4).
e. Material (3.1).
f. Chemical analysis, when required (4.7).
g. Copies and distribution of test certifications.
h. Packaging requirements (see 5.1).

6.3 Definitions.

6.3.1 Crack. A crack is a clean crystalline break passing through the grain or grain boundary without the inclusion of foreign elements.

6.3.2 Lap. A lap is a surface defect appearing as a seam, caused by the folding over of metal fins or sharp corners and then rolling or forging them into the surface, but not welding them.

6.3.3 Seam. A seam is an unwelded fold or lap which appears as an opening in the raw material as received from the source.

6.3.4 Inclusion. An inclusion is a non-metallic material in a solid metallic matrix.

6.4 Subject term (key word) listing.

Black chemical
Cadmium
Passivation

6.5 Changes from previous issue. Marginal notations are not used in this revision to identify changes with respect to the previous issue due to the extent of the changes.

Custodian:
Army - AR
Navy - OS
Air Force - 99

Review Activity:
Army - AT, AV, CR4, MI

Preparing Activity:

DLA - IS

(Project 5325-2014-008)

NOTE: The activities listed above were interested in this document as of the date of document. Since organizations and responsibilities can change, you should verify the currency of the information above using the ASSIST Online database at https://assist.dla.mil.