Downloaded from http://www.everyspec.com

INCH-POUND

MIL-DTL-45913/1A
14 JUNE 2011
SUPERSEDING
MIL-DTL-45913/1
30 APRIL 1998

DETAIL SPECIFICATION SHEET

NUT, SELF-LOCKING, HEXAGON, NON-METALLIC LOCKING FEATURE, 250 DEG F, UNC/ UNF-2B

This specification is approved for use by all Departments and Agencies of the Department of Defense.

The requirements for acquiring the product described herein shall consist of this specification sheet and procurement specification MIL-DTL-45913.

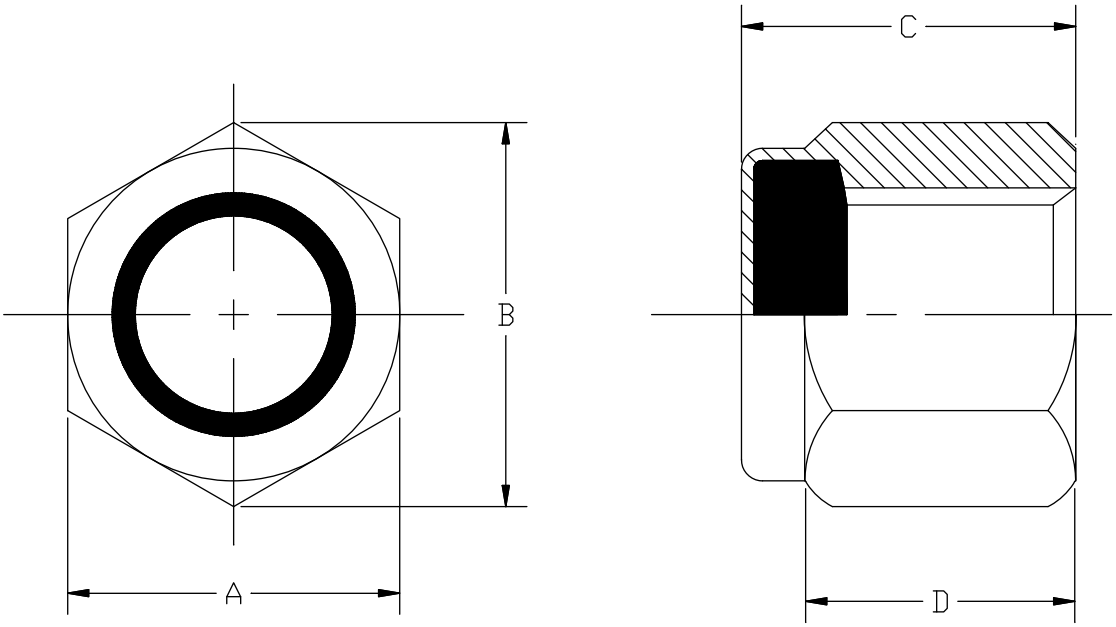

NOTES:
1. All dimensions are in inches.

FIGURE 1. NUT, SELF LOCKING, HEX, NON-METALLIC LOCKING FEATURE, UNC/ UNF-2B

Comments, suggestions, or questions on this document should be addressed to Defense Supply Center Philadelphia (DSCP), ATTN: DSCP-NASA, 700 Robbins Avenue, Philadelphia, PA 19111-5096 or e-mail to dscpg&ispecomments@dla.mil . Since contact information can change, you may want to verify the currency of this address information using the ASSIST Online database at https://assist.daps.dla.mil .

Downloaded from http://www.everyspec.com

REQUIREMENTS:

1. MATERIAL.
Steel and alloy steel shall be in accordance with SAE J995 grade 5 or 8, as specified in part-number.
Corrosion resisting steel (stainless steel) grades 303 and 316 or any alloy in accordance with ASTM F 594, Group 1 or Group 2, shall have a minimum ultimate tensile strength of 70 KSI and shall be non-magnetic.
Copper alloy (brass) shall have a minimum ultimate tensile strength of 58 KSI and be of a half hard temper.
Aluminum alloy shall have a minimum ultimate tensile strength of 62 KSI.

2. PLATING/FINISH.

Steel and alloy steel locknuts shall be cadmium plated per SAE-AMS-QQ-P-416 Type II, Class 2 or 3, or zinc plated per ASTM B633 Type II, Fe/Zn 8 or uncoated plain with a supplementary lubricant which is clean and dry to the touch.

Stainless steel locknuts shall be passivated SAE-AMS 2700, Method 1, Type 6 or 7, Class 1, or black oxide finish per MIL-DTL-13924.
Brass locknuts shall be black oxide finished per MIL-F-495, nickel plated per SAE-AMS-QQ-N-290, Class 2, or uncoated plain with a brite finish.
Aluminum locknuts shall be anodized clear, no color per MIL-A-8625 (see TABLE II).

3. SURFACE TEXTURE. Shall be Ra 125 microinches in accordance with ASME B46.1.

4. THREADS. Shall be coarse or fine threaded, class 2B, as specified in part-number, in accordance with ASME B1.1.

5. WORKMANSHIP. Parts shall be manufactured and processed with a level of care and workmanship befitting this type of product intended for general purpose military application. Parts shall be free from dirt, grease, loose or deposited foreign materials, sharp edges, burrs, chips, physical malformations or anything that might prevent the part from reliably performing its intended function.

6. PART NUMBER. The part number shall consist of the basic number of this specification sheet followed by a dash, a dash number from table I, a material code from table II, and a finish/plate code (when required) from table II.

EXAMPLE OF PART-NUMBER

M45913/1-4C G5 Z

- Z — Finish Code from Table II (Z=Zinc plating)
- G5 — Material Code from Table II
- 4C — Dash number from Table I to indicate size and thread.
- M45913/1- — Basic Specification Sheet Number followed by "-"

M45913/1-4CG5Z = Nut Self-Locking Hexagon, non-metallic locking feature, .250-20 thread, Grade 5 steel, zinc plated.

Downloaded from http://www.everyspec.com

TABLE I. DASH NUMBERS AND DIMENSIONS

Dash No.	Thread Size	A Width Across Flats		B Corners	C Thickness		D
		MAX	MIN	REF	MAX	MIN	REF
00F	.060-80 UNF-2B	.111	.104	.116	.055	.080	.045
01C	.073-64 UNC-2B	.251	.243	.268	.153	.133	.081
01F	.073-72 UNF-2B	.251	.243	.268	.153	.133	.081
02C	.086-56 UNC-2B	.251	.243	.268	.153	.133	.081
02F	.086-64 UNF-2B	.251	.243	.268	.153	.133	.081
03C	.099-48 UNC-2B	.251	.243	.268	.153	.133	.081
03F	.099-56 UNF-2B	.251	.243	.268	.153	.133	.081
04C	.112-40 UNC-2B	.251	.243	.268	.153	.133	.081
04F	.112-48 UNF-2B	.251	.243	.268	.153	.133	.081
05C	.125-40 UNC-2B	.251	.243	.268	.153	.133	.081
05F	.125-44 UNF-2B	.251	.243	.268	.153	.133	.081
06C	.138-32 UNC-2B	.313	.305	.339	.188	.168	.103
06F	.138-40 UNF-2B	.313	.305	.339	.188	.168	.103
08C	.164-32 UNC-2B	.345	.336	.374	.239	.219	.140
08F	.164-36 UNF-2B	.345	.336	.374	.239	.219	.140
010C	.190-24 UNC-2B	.376	.367	.410	.249	.229	.140
010F	.190-32 UNF-2B	.376	.367	.410	.249	.229	.140
012C	.216-24 UNC-2B	.439	.430	.482	.328	.298	.225
012F	.216-28 UNF-2B	.439	.430	.482	.328	.298	.225
4C	.250-20 UNC-2B	.439	.428	.482	.328	.298	.225
4F	.250-28 UNF-2B	.439	.428	.482	.328	.298	.225
5C	.312-18 UNC-2B	.502	.489	.552	.359	.329	.250
5F	.312-24 UNF-2B	.502	.489	.552	.359	.329	.250
6C	.375-16 UNC-2B	.564	.551	.622	.468	.438	.335
6F	.375-24 UNF-2B	.564	.551	.622	.468	.438	.335
7C	.437-14 UNC-2B	.627	.616	.698	.468	.438	.324
7F	.437-20 UNF-2B	.627	.616	.698	.468	.438	.324
8C	.500-13 UNC-2B	.752	.736	.837	.609	.579	.464
8F	.500-20 UNF-2B	.752	.736	.837	.609	.579	.464
9C	.562-12 UNC-2B	.877	.861	.978	.656	.626	.469
9F	.562-18 UNF-2B	.877	.861	.978	.656	.626	.469
10C	.625-11 UNC-2B	.940	.922	1.051	.765	.735	.593
10F	.625-18 UNF-2B	.940	.922	1.051	.765	.735	.593
12C	.750-10 UNC-2B	1.064	1.052	1.191	.890	.860	.742
12F	.750-16 UNF-2B	1.064	1.052	1.191	.890	.860	.742
14C	.875-9UNC-2B	1.252	1.239	1.403	.999	.969	.790
14F	.875-14 UNF-2B	1.252	1.239	1.403	.999	.969	.790
16C	1.000-8UNC-2B	1.440	1.427	1.615	1.078	1.016	.825
16F	1.000-12 UNF-2B	1.440	1.427	1.615	1.078	1.016	.825
18C	1.125-7UNC-2B	1.627	1.614	1.826	1.203	1.141	.930
18F	1.125-12 UNF-2B	1.627	1.614	1.826	1.203	1.141	.930
20C	1.250-7UNC-2B	1.815	1.801	2.038	1.422	1.360	1.125
20F	1.250-12 UNF-2B	1.815	1.801	2.038	1.422	1.360	1.125
22C	1.375-6UNC-2B	2.008	1.973	2.232	1.609	1.547	1.282
22F	1.375-12 UNF-2B	2.008	1.973	2.232	1.609	1.547	1.282
24C	1.500-6UNC-2B	2.197	2.159	2.444	1.640	1.578	1.313
24F	1.500-12 UNF-2B	2.197	2.159	2.444	1.640	1.578	1.313

Downloaded from http://www.everyspec.com

TABLE II. MATERIAL AND FINISH CODING

MATERIAL CODE		FINISH CODE	
Steel Grade 5	G5	Cadmium	C
Steel Grade 8	G8	Zinc	Z
Stainless Steel 303	S3	Black Oxide	B
Stainless Steel 316	S6	Nickel	N
Brass	BB	Anodized	no code (aluminum only)
Aluminum	AA	Passivate	no code (stainless only)
		Uncoated	no code

NOTE: See requirement 2 for compatibility of material and finish.

NOTES:

1. Dimensions in inches, unless specified, tolerance: ±.016.

2. Interpret drawing in accordance with ASME Y14.5M.

3. Break all Sharp edged .003 to .005 and remove all burrs and slivers.

4. In the event of a conflict between the text of this document and the references cited herein, the text of this document shall take precedence.

5. Unless otherwise specified, issues of referenced documents are those in effect at the time of solicitation.

6. Changes from previous issue. The margins of this specification are marked with vertical lines to indicate where changes from the previous issue were made. This was done as a convenience only and the Government assumes no liability whatsoever for any inaccuracies in these notations. Bidders and contractors are cautioned to evaluate the requirements of this document based on the entire content irrespective of the marginal notations and relationship to the last previous issue.

Custodians:
Army - AR
Air Force - 99
Navy - OS

Preparing activity
DLA - IS

(Project 5310-2011-015)

Review activities:
Army - AT, AV, CR4, EA, GL, MI
Air Force - 71
Navy - AS, MC, YD

NOTE: The activities listed above were interested in this document as of the date of this document. Since organizations and responsibilities can change, you should verify the currency of the information above using the ASSIST Online database at https://assist.daps.dla.mil.