Downloaded from http://www.everyspec.com

INCH-POUND
MIL-DTL-3950J
W/AMENDMENT 1
12 March 2014
SUPERSEDING
MIL-DTL-3950J
9 September 2013

DETAIL SPECIFICATION

SWITCHES, TOGGLE, ENVIRONMENTALLY SEALED GENERAL SPECIFICATION FOR

This specification is approved for use by all Departments and Agencies of the Department of Defense.

1. SCOPE

1.1 This specification covers the requirements for environmentally sealed toggle switches.

2. APPLICABLE DOCUMENTS

2.1 General. The documents listed in this section are specified in sections 3 and 4 of this specification. This section does not include documents cited in other sections of this specification or recommended for additional information or as examples. While every effort has been made to ensure the completeness of this list, document users are cautioned that they must meet all specified requirements of documents cited in sections 3 and 4 of this specification, whether or not they are listed.

2.2 Government documents.

2.2.1 Specifications, standards, and handbooks. The following specifications, standards, and handbooks form a part of this document to the extent specified herein. Unless otherwise specified, the issues of these documents are those cited in the solicitation or contract.

FEDERAL

SPECIFICATIONS

A-A-59588 - Rubber, Silicone

STANDARDS

FED-STD-H28 - Screw-Thread Standards for Federal Services.

DEPARTMENT OF DEFENSE

SPECIFICATIONS

MIL-DTL-83133 - Turbine Fuels, Aviation, Kerosene Types, NATO F-34(JP-8), NATO F-35, and JP-8 + 100 or (NATO F-37).
MIL-PRF-7808 - Lubricating Oil, Aircraft Turbine Engine, Synthetic Base.
MIL-PRF-15160/2 - Fuses: Instrument, Power, and Telephone (Nonindicating), Style F02.
MIL-PRF-87252 - Coolant Fluid, Hydrolytically Stable, Dielectric

Comments, suggestions or questions on this document should be addressed to DLA Land and Maritime, ATTN: VAT, Post Office Box 3990, Columbus, OH 43218-3990, or emailed to switches@dla.mil. Since contact information can change, you may want to verify the currency of this address information using the ASSIST Online database at https://assist.dla.mil.

Downloaded from http://www.everyspec.com

STANDARDS

MIL-STD-202 - Electronic and Electrical Component Parts.
MIL-STD-1285 - Marking of Electrical and Electronic Parts.

(See supplement 1 for list of specification sheets).

(Copies of these documents are available online at http://quicksearch.dla.mil/ or https://assist.dla.mil/ or from the Standardization Document Order Desk, 700 Robbins Avenue, Building 4D, Philadelphia, PA 19111-5094.)

2.3 Non-Government publications. The following documents form a part of this document to the extent specified herein. Unless otherwise specified, the issues of these documents are those cited in the solicitation or contract.

AMERICAN NATIONAL STANDARDS INSTITUTE (ANSI)

NCSL Z540.3 - Calibration of Measuring and Test Equipment, Requirements for

(Copies of these documents are available online at http://www.ansi.org or from the American National Standards Institute (ANSI), 125 West 43rd Street, New York, NY 10036-8002, telephone 212-642-4900.)

AMERICAN SOCIETY FOR TESTING AND MATERIALS (ASTM)

ASTM-D5948 - Molding Compounds, Thermosetting, Standard Specification for.
ASTM-E1119 - Glycol, Industrial Grade Ethylene, Standard Specification for.
ASTM-G21 - Materials to Fungi, Synthetic Polymeric, Determining Resistance of

(Copies of these documents are available online at http://www.astm.org or from the American Society for Testing and Materials, 100 Barr Harbor Drive, West Conshohocken, Pennsylvania, 19428-2959.)

INTERNATIONAL ORGANIZATION FOR STANDARDS (IS0)

ISO 10012 - Measurement Management Systems - Requirements for Measurement Processes and Measuring Equipment

(Copies of these documents are available online at http://www.ansi.org or from the American National Standards Institute (ANSI), 125 West 43rd Street, New York, NY 10036-8002, telephone 212-642-4900.)

IPC – ASSOCIATION CONNECTING ELECTRONICS INDUSTRIES

J-STD-002 - Solderability Tests for Component Leads, Terminations, Lugs, Terminals and Wires.
J-STD-004 - Requirements for Soldering Fluxes.

(Copies of these documents are available online at www.ipc.org/ or from American National Standards Institute (ANSI), 11 West 42nd Street, New York, NY 10036-8002, telephone 212-642-4900)

Downloaded from http://www.everyspec.com

SOCIETY OF AUTOMOTIVE ENGINEERS

SAE-AS7928 - Terminals, Lug: Splices, Conductor: Crimp Style, Copper, General Specification for.
SAE-AS5086 - Wire, Electric, Polyvinyl Chloride Insulated, Copper or Copper Alloy.

(Copies of these documents are available from Society of Automotive Engineers, 400 Commonwealth Drive, Warrendale, Pennsylvania, 15096-0001 or www.sae.org/)

UNDERWRITERS LABORATORIES, INC. (UL)

UL94 - Tests for Flammability of Plastic Materials for Parts in Devices and Appliances.

(Copies of these documents are available online at www.ul.com/ or from the Underwriters Laboratories, Inc., 333 Pfingsten Road, Northbrook, IL 60062-2002.)

2.4 Order of precedence. Unless otherwise noted herein or in the contract, in the event of a conflict between the text of this document and the references cited herein (except for related specification sheets), the text of this document takes precedence. Nothing in this document, however, supersedes applicable laws and regulations unless a specific exemption has been obtained.

3. REQUIREMENTS

3.1 Specification sheets. The individual item requirements shall be as specified herein and in accordance with the applicable specification sheet. In the event of any conflict between the requirements of this specification and the specification sheet, the latter shall govern.

3.2 Switch categories. Switches furnished under this specification shall be category I, category II, and category III, as defined in 3.2.1, 3.2.2, and 3.2.3, respectively.

3.2.1 Category I switches. Category I switches are completely defined by a MS standard or specification sheet (see 3.1).

3.2.2 Category II switches (see 6.2). Category II switches are the same as category I switches except for minor differences such as termination configuration, operating characteristics, and minor actuator variations, which do not change the basic design or construction of the qualified switch. Category II switches shall be acquired from a source listed on the Qualified Products List (QPL) for the particular similar product in category I. Category II switches are nonstandard.

3.2.3 Category III switches (see 6.2). Category III switches are not covered by MS standards or specification sheets. These switches are nonstandard.

3.3 Qualification. Category I switches furnished under this specification shall be products which are qualified for listing on the applicable QPL at the time set for opening of bids.

3.4 Material. Unless otherwise approved by the preparing activity material shall be as specified herein. When a definite material is not specified, a suitable material shall be used which enables the switches to conform to the performance requirements of this specification. Acceptance or approval of any constituent material shall not be construed as a guaranty of the acceptance of the finished product.

Downloaded from http://www.everyspec.com

3.4.1 Metals. All metal parts, other than current-carrying parts, shall be of corrosion-resistant material, or shall be suitably protected to resist corrosion. Paint is not acceptable for corrosion protection. Ferrous material shall not be used for current-carrying parts.

3.4.1.1 Dissimilar metals. When dissimilar metals are used in intimate contact with each other, protection against electrolysis and corrosion shall be provided. The use of dissimilar metals which, in contact, tend toward active electrolytic corrosion (particularly brass, copper, or steel used in contact with aluminum or aluminum alloy) is not acceptable. However, metal plating or metal spraying of dissimilar base metals to provide similar or suitable abutting surfaces is permitted. The use of dissimilar metals separated by a suitable insulating material is also permitted. For additional information and guidance on dissimilar metals see 6.7.

3.4.1.2 Pure tin. The use of pure tin, as an underplate or final finish, is prohibited both internally and externally. Tin content of switch components and solder shall not exceed 97 percent, by mass. Tin shall be alloyed with a minimum of 3 percent lead, by mass (see 6.9). The only exception allowed is if the pure tin is used on non-current carrying parts and said component is completely isolated from all current carrying parts by materials that are not electrically conductive.

3.4.2 Plastic materials. Unless otherwise specified (see 3.1), molded plastic material shall conform to ASTM D 5948-96. Stacked laminations shall not be used for the switch body. Other types of plastic materials may be used provided the manufacturer submits acceptable evidence of performance to the qualifying activity during the qualification test program on the submitted product. The plastic material used shall be inert or fungus resistant in accordance with ASTM G-21 plastic material used in all external switch parts and enclosures shall be tested in accordance with UL94 and classified as 94V-0; this requirement applies to all materials for external parts and enclosures regardless of whether the material used is acquired to a specification or not.

3.4.3 Elastomer seals. The material for elastomer seals shall be silicone rubber in accordance with A-A-59588. Other types of silicone rubber may be used provided the manufacturer submits acceptable evidence of performance to the preparing activity during the qualification test program on the submitted product.

3.5 Interface and physical dimension requirements. Switches shall be of the interface and physical dimensions specified (see 3.1 and 3.2).

3.5.1 Toggle lever. The toggle lever shall be metal, shall have a lusterless finish, and shall be insulated from all current-carrying parts.

3.5.2 Attitude. Switches shall be constructed to assure proper operation when mounted in any position.

3.5.3 Terminals. Terminals shall be as specified (see 3.1). Only the number of terminals required to accomplish the circuit characteristic shall be furnished.

3.5.3.1 Solderable terminals. Solderable terminals shall be treated to facilitate soldering. Silver plating shall not be used as the external coating. When gold plating is used because the terminals are integral with the gold contacts, its thickness shall be a minimum of 30 millionths of an inch and a maximum of 100 millionths of an inch. Terminals shall be designed so that wires can be mechanically secured prior to soldering. Terminals may be tapped or drilled after coating.

3.5.3.2 Screw terminals. Screw terminals shall be provided with the hardware specified (see 3.1 and the appendix herein).

Downloaded from http://www.everyspec.com

3.5.4 Mounting bushing. The mounting bushing shall be as specified (see 3.1). The bushing shall be provided with a seal between the toggle lever and the switching mechanism. The body of the elastomer seal shall not protrude from the top of the mounting bushing with the exception of the tapered joint or meniscus where the seal joins the toggle lever, which may be permitted to exceed the height of the mounting bushing slightly.

3.5.5 Hardware. For direct Government acquistion, all hardware (see 3.1), mounting, and terminal, shall be supplied in a separate package and packaged with the switch. QPL sources may provide switches to sources, other than the Government, without hardware and may mark these switches with the appropriate MS or M part number. Crimp pin contacts, for switches with integrated wire termination, are not supplied with the switch.

3.5.5.1 Mounting hardware. The mounting hardware shall be as specified (see 3.1).

3.5.5.2 Terminal hardware. The terminal hardware shall be as specified (see 3.1).

3.5.6 Anti-rotational means. All switches shall be designed to have an anti-rotational mounting means which shall be as specified (see 3.1).

3.5.7 Screw threads. Screw threads on external threaded parts shall be in accordance with FED-STD-H28. Threading of nonmetallic parts shall not be permitted. Terminal thread engagement shall be at least two full threads.

3.5.8 Solder. Where solder is employed, flux shall be in accordance with J-STD-004. Solder shall not be used to obtain mechanical strength.

3.5.9 Weight. Weight shall be as specified (see 3.1).

3.6 Performance.

3.6.1 Solderability (applicable to solderable terminals). When switches are tested as specified in 4.8.2, the criteria for acceptable solderability shall be in accordance with ANSI/J-STD-002.

3.6.2 Resistance to soldering heat (applicable to solderable terminals). When switches are tested as specified in 4.8.3, the switches shall remain operable. When opened, there shall be no internal deformation or damage.

3.6.3 Switching characteristics. When tested as specified in 4.8.4, switches shall operate as specified (see 3.1).

3.6.4 Strength of terminals. When switches are tested as specified in 4.8.5, there shall be no breakage, loosening, or rotating of terminals, and no damage to the switch body.

3.6.5 Strength of toggle lever, pivot, and lever stop. When switches are tested, as specified in 4.8.6, there shall be no malfunction damage, breakage, or short circuit; switches shall operate mechanically and electrically.

3.6.6 Strength of mounting bushing. When switches are tested as specified in 4.8.7, there shall be no loosening of the mounting bushing or other mechanical damage.

3.6.7 Contact voltage drop. When switches are tested as specified in 4.8.8., the contact voltage drop shall not exceed 2.5 millivolts initially and 5 millivolts after mechanical endurance.

Downloaded from http://www.everyspec.com

3.6.8 Dielectric withstanding voltage. When switches are tested as specified in 4.8.9, the switches shall withstand the application of the specified voltages without arcing, flashover, breakdown of insulation, or damage; there shall be no momentary flashover or leakage current in excess of five hundred microamperes.

3.6.9 Mechanical endurance. When switches are tested as specified in 4.8.10, there shall be no deterioration of the toggle seal, mechanical breakage, or malfunction. Circuitry and degree of toggle level movement shall be as specified (see 3.1).

3.6.10 Electrical overload, electrical endurance, intermediate current, low-level life, and temperature rise. When switches are tested as specified in 4.8.11, each pair of switch contacts under test shall open and close the circuit in proper sequence during each cycle of the switch-actuating member. There shall be no malfunction or damage during or after the test. Any blown fuse or tripped circuit breaker (see 4.8.11), shall constitute failure. When switches are tested as specified in 4.8.11.7, the temperature rise of the switch terminals shall not exceed 50°C. At the conclusion of the test, switches shall be electrically and mechanically operable while controlling the test load, at the test environmental and at room conditions. Electrical tolerances are as follows:

Voltage	±5 percent for 28V, 125 VDC, and 250 VDC
	±7 percent for 125 VAC and 250 VAC
Frequency:	±5 percent
Current:	±5 percent

3.6.11 Short circuit. When tested as specified in 4.8.12, switch contacts under test shall open after each closure. There shall be no mechanical failure or damage.

3.6.12 Vibration. When switches are tested as specified in 4.8.13, there shall be no separation of closed contacts or closure of open contacts in excess of 10 microseconds. There shall be no damage.

3.6.13 Shock. When switches are tested as specified in 4.8.14, there shall be no separation of closed contacts or closure of open contacts in excess of 10 microseconds. There shall be no damage.

3.6.14 Salt spray (corrosion). When switches are tested as specified in 4.8.15, there shall be no warping, cracking, excessive corrosion, or other damage, and the specified cycling shall be completed without failure. The mounting hardware shall be readily removable at the conclusion of the test.

3.6.15 Thermal shock. When switches are tested as specified in 4.8.16, there shall be no mechanical or electrical damage, or loosening of rivets or other fastening devices.

3.6.16 Moisture resistance. When switches are tested as specified in 4.8.17, there shall be no electrical failures, or breaking, spalling, cracking, or loosening of terminals.

3.6.17 Sand and dust. When switches are tested as specified in 4.8.18, switches shall be electrically and mechanically operable at the conclusion of the test, as evidenced by ability to control a pilot-lamp circuit.

Downloaded from http://www.everyspec.com

3.6.18 Switch sealing. When switches are tested as specified in 4.8.19, there shall be no leakage into the switch when it has been opened.

a. When switches are tested as specified in 4.8.19.1(a), there shall be no leakage as evidenced by a continuous stream of air bubbles emanating from the switch case. After the test, there shall be no leakage into the switch when it has been opened.

b. When switches are tested specified in 4.8.19.1(b), there shall be no leakage as evidenced by a continuous stream of air bubbles emanating from the switch case.

3.7 Marking.

3.7.1 Identification of product. As a minimum, switches shall be marked in accordance with MIL-STD-1285 as follows:

a. MS Standard part number or M number (category I only).

b. Manufacturer's part number (category II and category III).

c. Manufacturer's name, trade mark or source code.

d. Date code.

e. Switch positions (on-off, etc.).

3.7.2 Terminal identification. Unless otherwise specified (see 3.1), terminals shall be permanently marked in accordance with figure 1. Terminal positions not used need not be identified. Terminal marking on the side of the case is permissible.

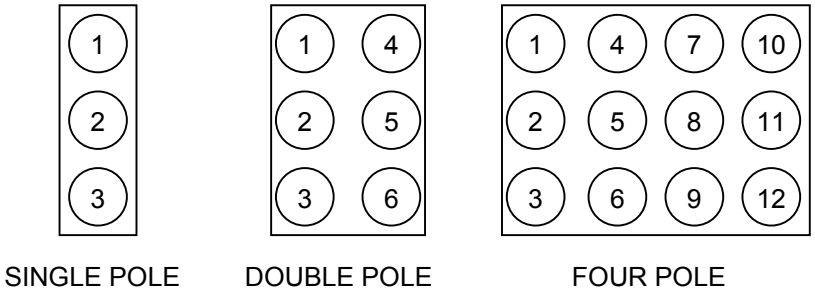

NOTES:
1. All views are rear of switch with keyway down.
2. Terminal 2; terminal 2 and terminal 5; and terminal 5 and terminal 8 are considered inboard terminals for single pole, double poles, and four poles, respectively. All others are outboard terminals.

FIGURE 1. Terminal identification.

Downloaded from http://www.everyspec.com

3.8 Recycled, recovered, environmentally preferable or biobased materials. Recycled, recovered, environmentally preferable, or biobased materials should be used to the maximum extent possible provided that the material meets or exceeds the operational and maintenance requirements, and promotes economically advantageous life cycle costs.

3.9 Workmanship. Switches shall be processed in such a manner to be free from cracked or displaced parts, sharp edges, burrs, and other defects which will affect life, serviceability, or appearance.

4. VERIFICATION

4.1 Classification of inspection. The inspection requirements specified herein are classified as follows:

a. Materials inspection (see 4.3).

b. Qualification inspection (see 4.5).

c. Inspection requirements for category II and category III switches (see 4.6).

d. Periodic inspection (see 4.7.2).

4.2 Test equipment and inspection facilities. Test and measuring equipment and inspection facilities of sufficient accuracy, quality, and quantity to permit performance of the required inspection shall be established and maintained by the supplier. The establishment and maintenance of a calibration system to control the accuracy of the measuring and test equipment shall be in accordance with NCSL Z540-2, ISO 10012, or equivalent system as approved by the qualifying activity.

4.3 Materials inspection. Materials inspection shall consist of verification that the materials listed in table I used in fabricating the switches, are in accordance with the applicable referenced specifications or requirements prior to such fabrication.

TABLE I. Materials inspection.

Material	Requirement paragraph	Applicable specification
Plastic	3.4.2	ASTM D 5948-96 UL94
Rubber	3.4.3	A-A-59588
Solder Flux	3.5.8	J-STD-004

4.4 Inspection conditions. Unless otherwise specified herein, all inspections shall be performed in accordance with the test conditions specified in the general requirements of MIL-STD-202.

4.5 Qualification inspection (category I switches, see 3.1, and 3.3). Qualification inspection shall be performed at a laboratory acceptable to the Government (see 6.3), on sample units produced with equipment and procedures normally used in production.

4.5.1 Sample. For qualification inspection, the sample size shall be as specified in table II and the appendix to this specification. The sample units which have been subjected to qualification inspection shall be forwarded to the preparing activity.

Downloaded from http://www.everyspec.com

TABLE II. Qualification test sequence.

Examination or test	Requirement paragraph	Test paragraph	Specimen 1	2	3	4	5	6	7	8	9	10	11	2 switches for each voltage, current and frequency				
Examination of product	3.1	4.8.1	1	1	1	1	1	1	1	1	1	1	2	1	1	1	1	1
Solderability	3.6.1	4.8.2											1					
Resistance to soldering heat	3.6.2	4.8.3						2										
Switching characteristics	3.6.3	4.8.4	2	2	2	2	2	3	2	2				2	2	2	2	2
Strength of terminals 1/	3.6.4	4.8.5												3				
Strength of toggle lever, pivot, and lever stop 1/	3.6.5	4.8.6												4				
Strength of mounting bushing 1/	3.6.6	4.8.7												5				
Contact voltage drop	3.6.7	4.8.8							3	3				6	3	3		
Dielectric withstanding voltage	3.6.8	4.8.9												7	4	4		
Mechanical endurance	3.6.9	4.8.10							4	4								
Electrical overload, electrical endurance, intermediate current, low-level life, and temperature rise	3.6.10	4.8.11																
Overload current	3.6.10	4.8.11.1												8	5	5		
Resistive load	3.6.10	4.8.11.2												9				
Inductive load	3.6.10	4.8.11.3													6			
Lamp load	3.6.10	4.8.11.4														6		
Intermediate current	3.6.10	4.8.11.5															3	
Life, low level	3.6.10	4.8.11.6																3
Temperature rise	3.6.10	4.8.11.7												10				
Contact voltage drop	3.6.7	4.8.8							5	5								
Short circuit	3.6.11	4.8.12			3	3												
Vibration	3.6.12	4.8.13	3	3														
Shock	3.6.13	4.8.14	4	4														
Salt spray (corrosion)	3.6.14	4.8.15			4	4												
Thermal shock	3.6.15	4.8.16					3	4										
Moisture Resistance	3.6.16	4.8.17	5	5			4	5										
Dielectric withstanding voltage	3.6.8	4.8.9	6	6			5	6						11	7	7		
Sand and dust	3.6.17	4.8.18									2	2						
Examination of product	3.1	4.8.1	7	7	5	5	6	7	6	6	3	3		12	8	8	4	4
Switching characteristics	3.6.3	4.8.4	8	8	6	6	7	8	7	7	4	4		13	9	9	5	5
Switch sealing 2/	3.6.18	4.8.19	9	9	7	7	8	9	8	8	5	5		14	10	10		

1/ Test shall be performed on two specimens only.
2/ Only the odd-numbered specimens shall be opened by the manufacturer.

Downloaded from http://www.everyspec.com

4.5.2 Failures. Failure of any switch to comply with the applicable requirements shall be cause for refusal to grant qualification.

4.5.3 Test data. All test data shall be submitted in triplicate.

4.5.4 Certification of material. When submitting samples for qualification, the manufacturer shall submit certification that the materials used in his components are in accordance with the applicable specification requirements, or shall state whether other materials are used. With the qualification test report, the manufacturer shall submit a cross-reference list of the switch parts and the materials used to fabricate those parts.

4.6 Inspection requirements for category II and category III switches. Inspection requirements shall be performed by the supplier after award of contract and prior to production, in accordance with ordering data (see 6.2).

4.6.1 Category II switches. Additional tests may be required to verify deviations.

4.6.2 Category III switches. Unless specified otherwise in the ordering data, the inspection requirements shall be in accordance with 4.5.

4.7 Conformance inspection.

4.7.1 Inspection of product for delivery. Inspection of product for delivery shall consist of group A inspection (see. 4.7.1.2)

4.7.1.1 Inspection lot. All switches that appear on the same MS standard or specification sheet and that are offered for delivery at one time shall be considered a lot for purposes of sampling and inspection. Momentary action switches shall form a separate lot.

4.7.1.2 Group A inspection. Group A inspection shall consist of the inspections specified in table III. The inspections may be performed in any order, except dielectric withstanding voltage shall be performed after seal testing.

4.7.1.2.1 Sampling plan. Statistical sampling shall be in accordance with table III and table IV. A randomly selected group(s) of samples is required for subgroup 1 and subgroup 2. For acceptance of the lot there shall be zero occurrences of defects.

4.7.1.2.1.1 Subgroup 1. A sample of parts shall be randomly selected in accordance with table IV, subgroup 1 sampling plan.

4.7.1.2.1.2 Subgroup 2. A sample of parts shall be randomly selected in accordance with table IV, subgroup 2 sampling plan.

Downloaded from http://www.everyspec.com

TABLE III. Group A inspection.

Inspection	Requirement paragraph	Test method paragraph	Sampling plan
Subgroup 1			
Examination of product	3.1	4.8.1	
Material	3.4	4.3 and 4.8.1	See 4.7.1.2.1.1 1/
Interface and Physical dimensions	3.5	4.8.1	
Marking	3.7	4.8.1	
Workmanship	3.9	4.8.1	
Subgroup 2			
Switch sealing	3.6.18	4.8.19.1(b)	
Switching characteristics	3.6.3	4.8.4	See 4.7.1.2.1.2 1/
Dielectric withstanding voltage	3.6.8	4.8.9	
Contact voltage drop	3.6.7	4.8.8	

1/ At the option of the contractor, documented in-process inspection may be used to satisfy the requirements provided that all of the contractor's in-process control data on these tests are made available to the Government upon request.

TABLE IV. Zero defect sampling plan.

Lot Size	Minimum number of switches to be tested 1/	
	Subgroup 1	Subgroup 2
1 - 4	All	All
5 - 12	5	All
13 - 50	5	13
51 - 90	7	13
91 - 150	11	13
151 - 280	13	20
281 - 500	16	29
501 - 1,200	19	34
1,201 - 3,200	23	42
3,201 - 10,000	29	50
10,000 - 35,000	35	60

1/ For lot sizes that are less than the required sample size, all switches shall be tested.

4.7.2 Periodic inspection.

4.7.2.1 Group B inspection. Group B inspection shall be completed in accordance with table V, in the order shown, within each 3-year period after initial qualification. When a manufacturer has switches qualified under various MS standards or specification sheets, the qualifying activity may authorize group B tests that do not require redundant testing on similar product features. Group B inspection shall be performed on sample units that have been produced, using the same manufacturing facilities and processes normally used in production and which have passed group A inspection. A manufacturer's normal quality control tests, production tests, and environmental tests may be used to fulfill all or part of group B inspection; however, all of group B inspection shall be completed as specified. Data used may be accumulated within the previous 24 months.

Downloaded from http://www.everyspec.com

4.7.2.1.1 Sampling plan. The sampling plan and test procedures shall be as specified in the appendix to this specification. The sample units shall be selected from current production. If switches are not in current production, they may be selected from stock; however, all switches shall be date coded within 24 months of the required group B submittal date. When there has been no production of a particular type of switch for a 3-year period, sample units shall be selected from the next production lot presented for acceptance and for each subsequent 3-year period.

4.7.2.1.2 Noncompliance. If a sample fails to pass group B inspection, the supplier shall take corrective action on the materials or processes, or both, as warranted, and on all units of product which can be corrected and which were manufactured under essentially the same conditions, with essentially the same materials, processes, etc., and which are considered subject to the same failure. Acceptance of the product shall be discontinued until corrective action, acceptable to the preparing activity, has been taken. After the corrective action has been taken, group B inspection shall be repeated on additional sample units (all inspections, or the inspection which the original sample failed, at the option of the preparing activity). Group A inspection may be reinstituted; however, final acceptance shall be withheld until the group B reinspection has shown that the corrective action was successful.

TABLE V. Group B inspection.

Inspection	Requirement paragraph	Test paragraph	Specimen											
			1	2	3	4	5	6	7	8	9	10	11	12
Mechanical endurance	3.6.9	4.8.10	x	x										
Electrical overload, electrical endurance, intermediate current, low-level life, and temperature rise	3.6.10	4.8.11												
Overload current		4.8.11.1					x	x	x	x				
Resistive load (ac) 1/		4.8.11.2					x	x						
Inductive load (altitude) 2/		4.8.11.3							x	x				
Life, low level		4.8.11.6									x	x		
Temperature rise		4.8.11.7					x	x						
Contact voltage drop	3.6.7	4.8.8	x	x										
Shock	3.6.13	4.8.14			x	x								
Salt spray (corrosion)	3.6.14	4.8.15			x	x								
Solderability	3.6.1	4.8.2											x	x
Dielectric withstanding voltage (At atmospheric pressure)	3.6.8	4.8.9.1					x	x	x	x				
Examination of product	3.1	4.8.1	x	x	x	x	x	x	x	x	x	x	x	x
Switching characteristics	3.6.3	4.8.4	x	x	x	x	x	x	x	x	x	x		
Switch sealing 3/	3.6.18	4.8.19	x	x	x	x	x	x	x	x	x	x		

1/ Test at 115 volts, 60 Hz, 71°C.
2/ Test at 28 V dc, 65,000 feet.
3/ Only the odd-numbered specimens shall be opened by the manufacturer.

Downloaded from http://www.everyspec.com

4.7.3 Retention of qualification. To retain qualification, the supplier shall forward to the qualifying activity via Government quality assurance representative at yearly intervals, summaries of group A inspection for that period, along with group B test reports, when applicable. The summary of group A inspections shall indicate as a minimum the number of inspection lots which have passed and the number which failed (including the number and type of any part failures, the reason for failure, the corrective action taken and how the lot was reexamined). The group B test report shall cover the actual tests performed. If the results for group B tests indicate nonconformance with the specification requirements, action shall be taken to remove the failing products from the qualified products list. Failure to submit the summary shall result in loss of qualification for that product. In the event that no production occurred during the reporting period, a report shall be submitted certifying that the company still has the capabilities and facilities necessary to produce the item.

4.8 Methods of examination and test.

4.8.1 Examination of product. Switches shall be examined to verify that the interface and physical dimensions, marking, and workmanship are in accordance with the applicable requirements. Only two of the sample units shall be inspected for compliance with physical dimensions. This inspection shall be performed before any other test is performed on the sample units (see 3.1, 3.4, 3.5, 3.7, and 3.9).

4.8.2 Solderability (applicable to solderable terminals, see 3.6.1). Switches shall be tested in accordance with method 208 of MIL-STD-202. The following details and exceptions shall apply:

a. Number of terminals to be tested - A minimum of one terminal of a closed contact per switch.

b. Depth of immersion in molten solder - Terminals shall be immersed to the maximum extent possible.

c. Examination of terminals - Method for evaluation of lugs and tabs shall apply.

d. Dipping machine - Need not be used.

4.8.3 Resistance to soldering heat (applicable to solderable terminals) (see 3.6.2). Switches shall be tested in accordance with method 210 of MIL-STD-202. The following details shall apply:

a. Number of terminals to be tested - A minimum of one terminal of a closed contact per switch.

b. Depth of immersion in molten solder - Terminals shall be immersed to the maximum extent possible.

c. Test condition letter - B.

d. Cooling time prior to final examinations and measurements - not applicable.

e. Examinations and measurements: Before - None.
After - Switches shall be operable and there shall be no internal deformation or other damage when opened at the conclusion of the test sequence.

4.8.4 Switching characteristics (see 3.6.3). Switching action (e.g., on-off, on-off-on, etc.) and circuitry shall be inspected for compliance with the applicable requirements (see 3.1). Circuit continuity shall be inspected using a 6-volt source with a maximum load of 100 milliamperes.

Downloaded from http://www.everyspec.com

4.8.5 Strength of terminals (see 3.6.4). Switches shall be mounted by their normal mounting means. Two terminals on each switch shall be tested (see figure 1). However, a terminal shall be tested only once in one direction.

4.8.5.1 Solderable terminals. Solderable terminals shall be tested in accordance with method 211 of MIL-STD-202. The following details and exceptions shall apply:

a. Test condition letter - A.

b. Applied force - 5 pounds.

c. Direction of applied force:
   (1) With the terminals vertical and pointing downward, the specified pull shall be applied directly downward.
   (2) With the terminals horizontal, the specified pull shall be applied directly downward.

4.8.5.2 Screw-lug terminals. Screw-lug terminals shall be tested in accordance with method 211 of MIL-STD-202. The following details and exceptions shall apply:

a. Test condition letter - A.

b. Applied force - 25 pounds, except that where 4-40 terminals are used, a 5-pound pull shall be used.

c. Direction of applied force
   (1) Parallel to the axis of the terminal screw.
   (2) Perpendicular to the axis of the terminal screw.

4.8.5.3 Integrated wire terminals. Integrated wire terminals shall be subjected to a 15-pound pull 5 seconds to 10 seconds in the following directions:

a. With the long dimension of terminal contact vertical, and the contact opening facing downward, specified pull shall be applied directly downward.

b. With the long dimension of the terminals contact horizontal, the specified pull shall be applied directly downward.

4.8.5.4 Screw-thread terminals. Screw-thread terminals shall be tested in accordance with method 211 of MIL-STD-202, test condition E. The torque shall be applied in the direction which will tighten the screw.

Downloaded from http://www.everyspec.com

4.8.6 Strength of toggle lever, pivot, and lever stop (see 3.6.5). The switch shall operate mechanically and electrically at a maximum load of 6 volts dc, 100 milliamperes after the following tests:

a. A 25-pound load shall be applied to the tip of the actuating lever for one minute under each of the following conditions:
   (1) Perpendicular to the lever axis and parallel to the line of lever travel at each end position of the lever. For lever-lock types, the types shall be conducted at each fixed position of the lever.
   (2) Perpendicular to the lever axis and perpendicular to the line of travel at each lever position.
   (3) Coaxial with the lever axis away from the lever pivot, throughout the entire range of lever travel.

b. A 25-pound load shall be applied to the tip of the actuating lever, coaxial with the lever axis and toward the lever pivot, throughout the entire range of lever travel. For lever-lock types, this test is the entire range of lever travel. For lever-lock types, this test is only applicable to those changes in lever from its detent position.

4.8.7 Strength of mounting bushing (see 3.6.6). Bushing-mounted switches shall be mounted on a metal panel using normal mounting means and hardware. A torque of 25-pound-inches shall be applied to the mounting nut on switches with 15/32-inch diameter bushing or larger and a torque of 15-pound-inches shall be applied to the mounting nut on smaller size bushing. With the mounting nut tightened using a maximum torque of 5 ounce-inches, a torque of 5 pound-inches shall then be applied to the mounted switch body.

4.8.8 Contact voltage drop (see 3.6.7). Switches shall be tested in accordance with method 307 of MIL-STD-202; the following details and exceptions shall apply:

a. Measurements shall be made between the terminals of the contacts of the same pole forming a switching circuit. Measurements shall be made for each pole of multipole switches.

b. Test circuit - 100 milliamperes.

c. Open-circuit voltage - 2 volts dc to 6 volts dc.

d. Number of activations prior to measurement - 3.

e. Number of test activations - 3.

f. Number of measurements per activation - 1.

Downloaded from http://www.everyspec.com

4.8.9 Dielectric withstanding voltage (see 3.6.8). Switches shall be tested in accordance with method 301 of MIL-STD-202. The following details and exceptions shall apply:

a. Special conditions: For qualification and group B inspections, switches shall be tested in accordance with 4.8.9.1, and 4.8.9.2. For group A inspection, switches shall be tested in accordance with 4.8.9.1.

b. Test voltage: The magnitude of the applied test voltage shall be as specified in 4.8.9.1 and 4.8.9.2.

c. Duration of application of test voltage:
   (1) Qualification and group B inspections: 1-minute, minimum.
   (2) Group A inspection: 2 seconds to 5 seconds.

d. Points of application: The following points of application shall apply for each toggle lever position:
   (1) Between current-carry parts and all noncommon exposed or grounded metal parts.
   (2) Between current-carry parts of adjacent poles of multipole switches (not applicable after electrical endurance tests).
   (3) Between mutually insulated current-carry parts of the same pole (not applicable after electrical endurance tests).

e. Monitoring: The circuit shall be monitored while the test voltage is at its specified magnitude, to determine of the leakage current exceeds 500 microamperes.

f. Examination after test - Switches shall be examined for arcing, flashover, breakdown of insulation, or damage.

4.8.9.1 At atmospheric pressure. The applied test voltage shall be:

a. Qualification and group B inspections - 1,000 Vrms minimum except:
   (1) Switches rated above 250 volts shall be subjected to a minimum voltage of 1,000 Vrms plus 200 percent of the maximum rated voltage.
   (2) 750 Vrms, minimum, after electrical endurance tests.

b. Group A inspection - Test shall be conducted at room ambient conditions, and the potential shall be conducted at room ambient conditions, and the potential shall be 1,200 Vrms, minimum, except switches rated above 250 volts shall be subjected to a minimum voltage of 1,200 Vrms plus 240 percent of the maximum rated voltage.

4.8.9.2 At reduced barometric pressure. The following details shall apply:

a. Method 105 of MIL-STD-202 at 65,000 ft.

b. The applied test voltage shall be 500 Vrms minimum except switches rated above 250 volts shall be subjected to a minimum voltage of 500 Vrms plus 200 percent of the maximum rated voltage.

Downloaded from http://www.everyspec.com

4.8.10 Mechanical endurance (see 3.6.9). The switches shall be subjected to 40,000 cycles of operation. The following details shall apply:

a. Switches shall be maintained at a temperature of -65C° $^{+0°C}_{-4°C}$ for a period of at least two hours with the contacts open. At the conclusion of this period all "on" positions shall be tested using a pilot circuit with parameters of 28 Vdc maximum and 100 milliamperes maximum. Failure to turn "on" on the first operation shall constitute failure.

b. One half of the cycles shall be -65C° $^{+0°C}_{-4°C}$ while the other half of the cycles shall be at +71 $^{+4°C}_{-0°C}$.

c. A cycle shall be the movement of the toggle lever from one extreme position to the other extreme position and return to the original position.

d. Cycling rate shall be 10 cycles per minute (cpm) to 18 cpm. At the manufacturer's option, a faster rate of cycling, up to 60 cpm, may be used.

e. Lever-lock switch handles shall be tested for 20,000 actuations, at room ambient conditions, by pulling the lever to its fully extended position and then permitting it to return to its fully retracted position without operation of the switches, at a maximum of 60 cpm.

f. With the toggle lever in the unlocked position, lever-lock switches shall be tested with the toggle lever moving through all positions.

g. Momentary switches shall return from their momentary position(s) solely by the internal mechanism of the switch.

4.8.11 Electrical endurance, electrical overload, intermediate current, low level life, and temperature rise (see 3.6.10). The following conditions and exceptions shall apply:

a. Test switches shall be mounted by their normal mounting means against a metal plate. Insulators shall not be interposed between the switch case and the metal plate or between the metal actuator of the actuating machine and the switch toggle.

b. The metal mounting plate, one side of the power supply, and the metal actuator of the actuating machine shall all be connected to a common ground through a three ampere fuse in accordance with MIL-PRF-15160/2, characteristic A (F02A, 250V, 3A) (see figure 2). For direct current, the negative side of the power supply shall be grounded. The test switch shall be connected to the power source and test load using a ½ foot to 6 feet length of wire as specified in table VI.

c. The test voltage magnitude and electrical frequency shall be maintained within the tolerances specified when the test voltage is measured at the switch terminals. Each operation of the switch shall be monitored to determine whether any contact has failed to open or close its individual circuit in proper sequence. Each failure shall be recorded and reported. Monitoring circuit shall not shunt switch contacts or inductive components in the test circuit.

d. One throw of each pole of the switch shall be connected to an independent test circuit meeting the specified conditions. Multipole switches are to be tested with a load per pole and with opposite line polarity on adjacent poles in accordance with figure 2. For double-throw switches, one-half the switches shall be tested with the load circuit connected to one throw and the remaining half of the switches shall be tested with the load circuit connected to the other throw.

Downloaded from http://www.everyspec.com

e. Switches shall be actuated at a frequency of 10 cpm to 18 cpm at a velocity of 3 inches per second to 5 inches per second by a power driven actuator. The switch shall be continuously actuated for the specified number of cycles and shall be actuated only through the toggle lever positions necessary to make and break the test load. Switches with lever-lock toggle levers shall be tested with the toggle lever in the unlock position.

f. During the overload test, the closed time of the switch shall be 0.5 second, minimum, during each cycle of operation. Unless otherwise specified (see 3.1), two switches shall be subjected to the overload, resistive, inductive, and lamp load endurance tests at each voltage, frequency, and current specified (see table II).

g. Overload and endurance tests shall be performed on the same pair of contacts using the same voltage and electrical frequency for both tests.

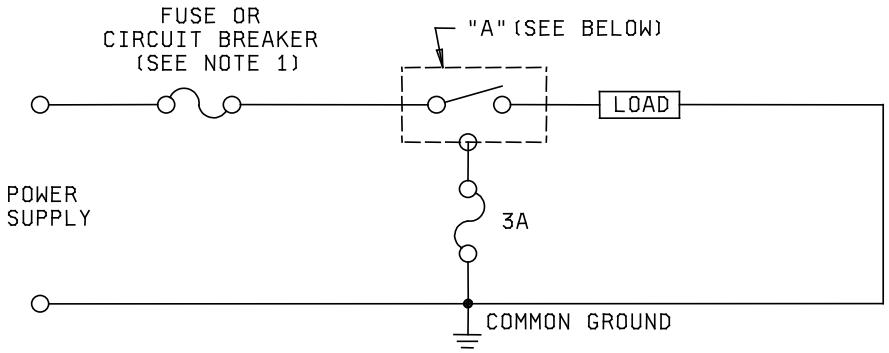

a. Test set-up for single pole switches.

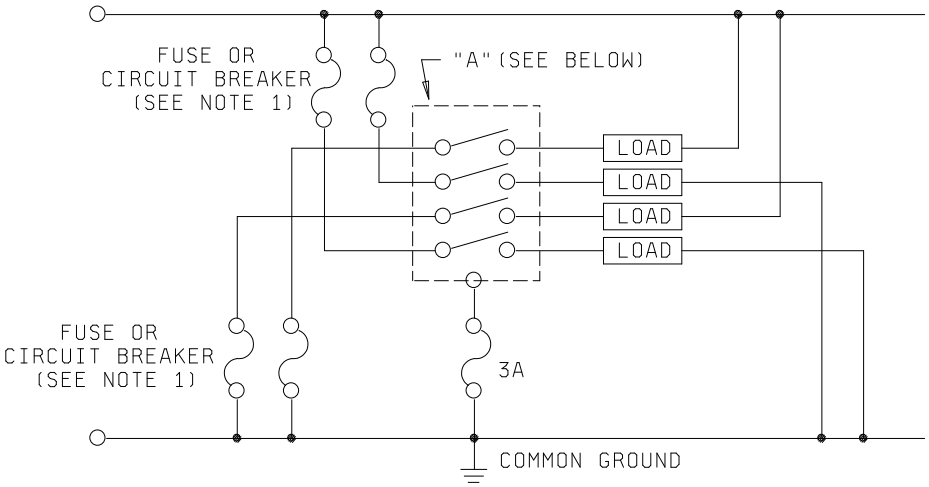

b. Test set-up for multipole switches (opposite polarity between adjacent poles).

"A" Metal mounting plate and metal actuator of actuating machine.
1/ See table VI for proper fuse or circuit breaker.

FIGURE 2. Test set-up for electrical endurance test.

Downloaded from http://www.everyspec.com

4.8.11.1 Overload circuit. The switch shall make and break 150 percent of the rated resistive load at the applicable voltage and electrical frequency for 50 cycles of operation at room conditions.

4.8.11.2 Resistive load (dc and ac). One half of the switches shall make and break the rated resistive load for 20,000 operating cycles while at room ambient pressure and a temperature of 71°C(-0°C, +4°C). The other half of the switches shall make and break the rated resistive load for 20,000 operating cycles while at room temperature and a pressure equivalent to 65,000 feet altitude.

4.8.11.3 Inductive load (dc and ac). One half of the switches shall make and break the rated inductive load for 20,000 operating cycles while at a pressure equivalent to 65,000 feet altitude and at room ambient temperature while the other half shall make and break the rated inductive load for 20,000 operating cycles at room ambient temperature and pressure. The dc inductive loads shall use indicators which have response and stored energy values as indicated in figure 3 and figure 4. The ac inductive loads shall have a power factor of 70 ± 5 percent.

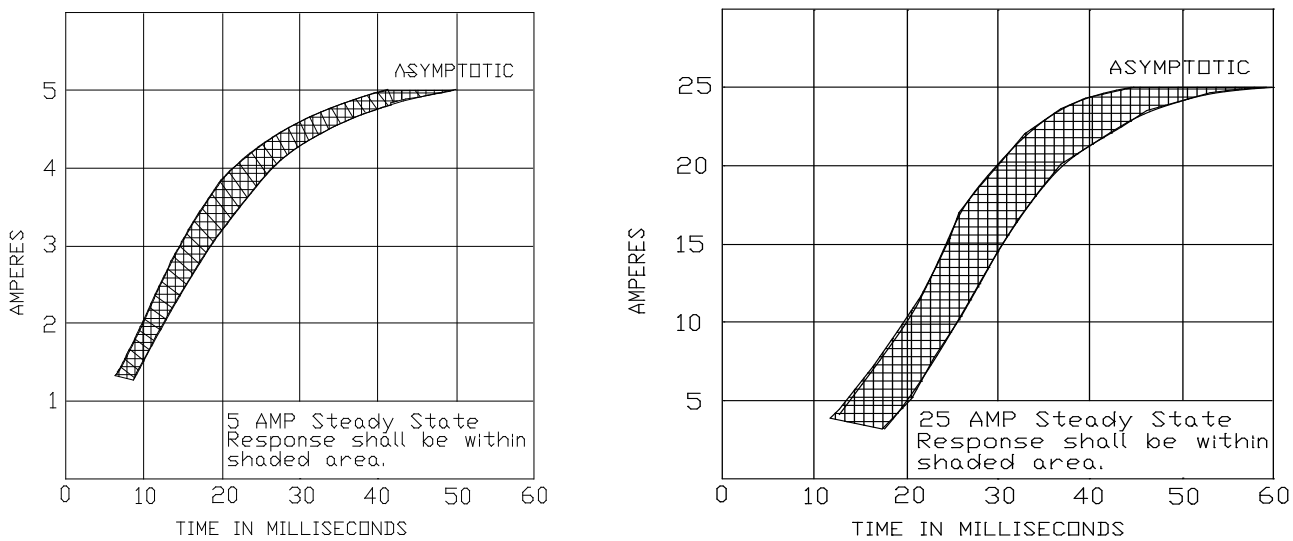

FIGURE 3. Response (current vs time) Type I inductors only.

Downloaded from http://www.everyspec.com

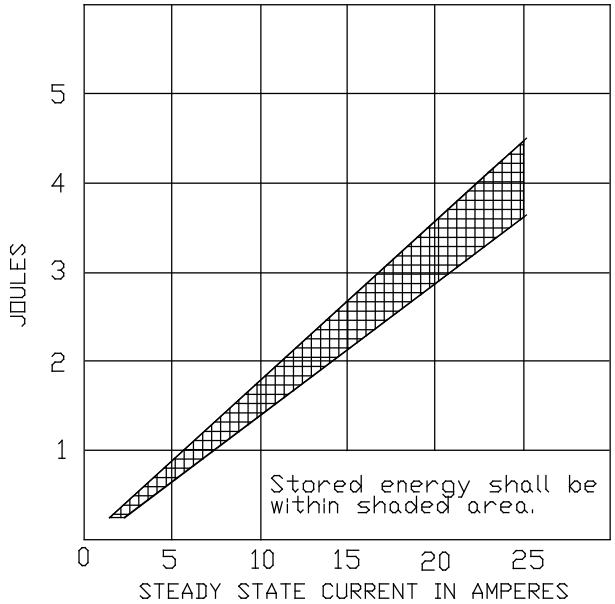

FIGURE 4. Stored energy (joules vs current) Type I inductors only.

4.8.11.4 Lamp-load (dc and ac). Switches shall be subjected to 20,000 operating cycles when wired into a circuit having rated steady state lamp-load current at the applicable rated voltage. For ac lamp-loads, only tungsten filament lamps having a wattage not exceeding 200 watts at the specified voltage shall be used to make up the load. For dc lamp-loads only tungsten filament lamps having a wattage rating up to 50 watts at the specified voltage shall be used to make up the load. A minimum cooling period of 15 seconds shall be allowed between successive operations of the lamps. At the option of the manufacturer, a synthetic lamp-load may be used for this test. The synthetic lamp-load shall consist of making ten times the rated lamp-load and breaking the rated lamp-load. The duration of the ten times inrush shall be .015 second minimum.

4.8.11.5 Intermediate current. Switches shall be subjected to 20,000 operating cycles of making and breaking a 35 milliamperes to 40 milliamperes resistive load at the lowest rated dc voltage in an ambient temperature of 71°C(-0°C, +4°C). Multipole switches shall be subjected to this test with alternate poles making and breaking the rated resistive load at the lowest dc voltage.

4.8.11.6 Life, low level. When specified (see 3.1), switches shall be tested in accordance with method 311 of MIL-STD-202. The following details and exceptions shall apply:

a. Number of "misses" allowed - None.

b. Maximum contact resistance - 3 ohms.

c. Number of cycles and cycling rate - 40,000 cycles at the rate of 10 cpm to 18 cpm. At the manufacturer's option, a faster rate of cycling (up to 60 cpm) may be used.

d. The conditions of figure 2 do not apply.

Downloaded from http://www.everyspec.com

4.8.11.7 Temperature rise. Each pole(s) of the switch shall be connected in a circuit carrying the resistive endurance test current at any convenient ac or dc voltage. At the end of a 1-hour period, the terminal temperature rise at a point adjacent to the insulating medium shall be determined by means of appropriate thermocouples consisting of No. 28-32 AWG iron-constantan wire. This test shall be performed on the same switch contacts previously subjected to the overload and resistive electrical endurance test. During the test, switches shall be mounted 6 inches apart in still air on 1/16 inch-thick steel panel at least 6 inches long.

4.8.12 Short circuit (see 3.6.11). Switches shall be tested in accordance with 4.8.12.1, or 4.8.12.2 when specified (see 3.1). The following details shall apply to both methods:

a. The switches shall be inserted in a circuit calibrated to supply current equal to 60 times the rated resistive load at the lowest rated dc voltage specified (see 3.1).

b. The switches shall be connected in series to a thermal type circuit breaker or a fuse in accordance with figure 5 and table VI.

c. The wire shall be as specified in SAE-AS-5086 and table VI, as determined by the rated resistive load of the switch (see 3.1).

d. Terminals shall be in accordance with SAE-AS7928.

e. Calibration shall be made with a substitute circuit breaker (or fuse), without the switch being tested, and with the switch leads in the circuit.

f. The calibrated circuit shall be closed by the appropriate switch (see 4.8.12.1, or 4.8.12.2), and after the circuit breaker or fuse interrupts the circuit the appropriate switch shall be manually opened by means of the toggle lever. This procedure shall be performed 10 times. After each closure, the toggle lever of the switch under test shall be returned manually to the "OFF" or an alternate position, and the switch contacts shall be checked for proper opening by any suitable continuity test method. The circuit breaker shall be reset or the fuse replaced after each closure. A minimum of two minutes shall elapse between closures. For double throw switches, one-half shall be tested in one position, and the other half shall be tested in the other position. For multipole switches any (one) pole shall be tested.

4.8.12.1 Method I. The switch used to calibrate the circuit shall close the circuit.

4.8.12.2 Method II. The switch being tested shall close the circuit.

Downloaded from http://www.everyspec.com

TABLE VI. Wire size and circuit breaker or fuse designations.

Amperes 1/	SAE-AS-5086 wire size	Circuit breaker or fuse
3.0 or less	20	The size of the circuit breaker or fuse shall be equivalent to the test current
5.0	20	
7.5	18	
10.0	18	
15.0	18	
18.0	16	
20.0	16	
25.0	14	
30.0	14	
40.0	12	
60.0	10	
80.0	8	
175.0	2	

1/ Where the wire size, circuit breaker, or fuse size does not coincide with the required current, the next larger wire size, circuit breaker, or fuse shall be used.

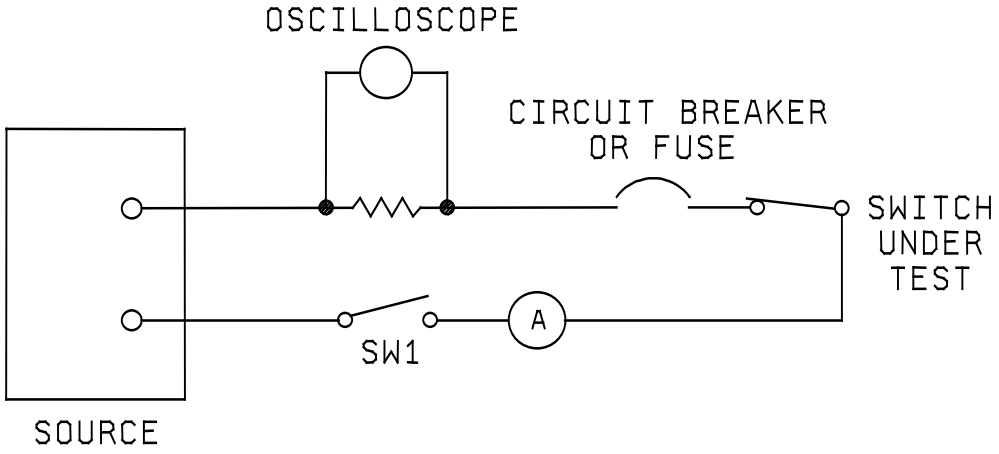

FIGURE 5. Circuit diagram for short circuit test.

Downloaded from http://www.everyspec.com

4.8.13 Vibration (see 3.6.12). Switches shall be tested in accordance with method 204 of MIL-STD-202. The following details and exceptions shall apply:

a. Contact chatter shall be monitored in accordance with method 310 of MIL-STD-202.

b. Test condition letter - A.

c. Tests and measurements prior to vibration - Not applicable.

d. Mounting - Switches shall be rigidly mounted by their normal mounting means on a rigid metal panel. The mounting fixture shall be free from resonances over the test frequency range. Half of the switches shall be tested in one lever position and the other half of the switches shall be tested in the alternate lever position.

e. Electrical load conditions - The electrical load shall consist of the monitor circuit only.

f. Measurements during vibration - Switch contact stability shall be continuously monitored during vibration. If more than one contact pair is being monitored simultaneously by one chatter indicator, open contact pairs shall be connected in parallel and closed contact pairs shall be connected in series during this test. In the event of indication of a contact opening greater than specified, the test shall be modified so that switches may be individually tested to determine if a switch is defective.

g. Measurements after vibration - Switching characteristics (see 4.8.4).

h. Examination after vibration test - Switches shall be examined for change in actuated position, and broken, deformed, displaced, or loose parts.

4.8.14 Shock (see 3.6.13). Switches shall be tested in accordance with method 213, MIL-STD-202. test condition B. The following details and exceptions shall apply:

a. Contact chatter shall be monitored in accordance with method 310, MIL-STD-202, test condition A.

b. Mounting - Switches shall be mounted by their normal mounting means. Half of the switches shall be tested in one lever position and the other half of the switches shall be tested in the alternate lever position.

c. Electrical load conditions - The electrical load shall consist of the monitor circuit only.

d. Measurements during shock - Switch stability shall be continuously monitored during shock. If more than one contact pair is being monitored simultaneously by one chatter indicator, open contact pairs shall be connected in parallel and closed contact pairs shall be connected in series during this test. In the event of indication of a contact opening greater than specified, the test shall be modified by applying successive identical blows in the same plane to monitor contacts, switch by switch, to determine if a switch is defective.

e. Measurements after shock - Switches shall be inspected for switching characteristics (see 4.8.4).

f. Examination after test - Switches shall be examined for broken, deformed, displaced, or loose parts.

Downloaded from http://www.everyspec.com

4.8.15 Salt spray (corrosion) (see 3.6.14). Switches shall be tested in accordance with method 101 of MIL-STD-202. The following details and exceptions shall apply:

a. Test condition letter - B.

b. Switches shall be dried for 6 hours in a force draft oven at 50°C to 60°C. Following the drying period, the switches shall be subjected to 10 cycles of operation at the lowest rated dc voltage.

c. Following the 10 cycles of operation, switches shall be examined for warping, cracking, or excessive corrosion. Excessive corrosion is defined as corrosion which interferes with electrical or mechanical performance, or in the case of plated metals, corrosion which has passed through the plating and attacked the base metal. After the test, mounting hardware shall be readily removable.

4.8.16 Thermal shock (see 3.6.15). Switches shall be tested in accordance with method 107 of MIL-STD-202. The following details shall apply:

a. Test condition letter - B.

b. Measurements before and after cycling - Not applicable.

c. Examination after test – Switches shall be examined for mechanical and electrical damage and loosening of fastening devices.

4.8.17 Moisture resistance (see 3.6.16). Switches shall be tested in accordance with method 106 of MIL-STD-202. The following details and exceptions shall apply:

a. Mounting - By normal mounting means on a corrosion resistant metal panel positioned 15° from the vertical. One half the switches shall be mounted with the toggle lever up and the other half with the toggle lever down. The mounting panel shall have appropriate mounting holes so that switches are at least 1 inch apart.

b. Polarization - During step 1 to step 6 inclusive, a dc potential of 100 volts shall be applied between current carrying parts and panel. Negative polarity shal be applied to the panel. Step 7a and step 7b are not applicable.

c. Final measurements - Following a 24-hour drying period a 25°C ±5°C and 50 ±5 percent relative humidity, switching characteristics shall be measured as specified in 4.8.4. Switches shall be examined for breaking, spalling, cracking, or loosening of terminals and shall be electrically operable.

d. Water - Steam, deionized or distilled water shall be used.

4.8.18 Sand and dust (see 3.6.17), applicable to qualification only. Switches shall be tested in accordance with method 110 of MIL-STD-202. The following details shall apply:

a. The switches shall be oriented so that the toggle lever seal is exposed to the dust stream.

b. During step 3, the switches shall be mechanically actuated for 2500 cycles at a rate of 14 cpm ± 4 cpm.

c. Step 3 shall be performed immediately after reaching stabilization in step 2.

Downloaded from http://www.everyspec.com

4.8.19 Switch sealing (see 3.6.18).

4.8.19.1 Sealing.

a. Applicable for qualification and group B tests only. Switches shall be immersed in an enclosure containing a saturated solution of sodium chloride. The enclosure shall be subjected to a vacuum resulting in an absolute pressure of 2.0 inches ± 0.5 inches of mercury. During the first 5 minutes after the required vacuum has reached, the immersed switches shall be observed for leakage as evidenced by a continuous stream of bubbles emanating from the switch case. The vacuum shall be maintained for a period of 4 hours, and the pressure shall then be returned to normal. After immersion for a minimum of 16 hours at normal pressure, the switches shall be removed from the enclosure, and the odd-numbered specimens shall be opened and examined for leakage at the conclusion of the test sequence. "Switches with integrated wire termination shall be fully wired and shall have one inboard and one outboard terminal on two switches loaded with a five-pound ±1 pound load at 90° to the center line of the switches."

b. Applicable for group A tests only. The switches shall be immersed in an enclosure containing water. The enclosure shall be subject to a vacuum resulting in an absolute pressure equal to 2 inches ± 0.5 inches of mercury for 5 minutes. The immersed switches shall be observed for leakage as evidence by a continuous stream of bubbles emanating from the water prior to release of the vacuum.

4.8.19.2 Terminal sealing, fluid submersion (applicable to switches with integrated wire terminals).

a. Applicable to qualification and group B only. Switch terminals shall be immersed for three cycles as follows:
   (1) Two switches (specimen 1 and specimen 2 of table II) with integrated wire terminals shall be fully wired.
   (2) Switches shall be completely submerged in each of the following fluids for 2 (+1/2, -0) minutes which shall consist on one cycle:
      (a) MIL-DTL-83133 – Turbine Fuels, Aviation, Kerosene Types, NATO F-34(JP-8), NATO F-35, and JP-8 + 100 or Commercial Jet-A-1.
      (b) Skydrol 500 A - Federal Stock Number 9150-857-9069.
      (c) MIL-PRF-87252 - Coolant Fluid, Hydrolytically Stable, Dielectric.
      (d) ASTM E 1119 - ethylene glycol.
      (e) MIL-PRF-7808 - Lubricating Oil, Aircraft Turbine Engine, Synthetic Base.
      (f) After each immersion the excess liquid is to be blown off the switch external surfaces with an air jet.
   (3) At the end of the third cycle, the dielectric withstanding voltage shall be as specified herein. There shall be no cracking and loosening of bonds and seams.
   (4) Switches shall be operable and the odd-numbered samples shall be opened and examined for leakage upon conclusion of the test sequence.

5. PACKAGING

5.1 Packaging. For acquisition purposes, the packaging requirements shall be as specified in the contract or order (see 6.2). When packaging of materiel is to be performed by DoD or in-house contractor personnel, these personnel need to contact the responsible packaging activity to ascertain packaging requirements. Packaging requirements are maintained by the Inventory Control Point's packaging activities within the Military Service or Defense Agency, or within the military service's system commands. Packaging data retrieval is available from the managing Military Department's or Defense Agency's automated packaging files, CD-ROM products, or by contacting the responsible packaging activity.

Downloaded from http://www.everyspec.com

6. NOTES

(This section contains information of a general or explanatory nature that may be helpful, but is not mandatory.)

6.1 Intended use. Unless otherwise specified on the individual MS standards or specification sheets, switches furnished under this specification are not intended for use in circuits with ratings lower than the intermediate current.

6.2 Acquisition requirements. Acquisition documents must specify the following:

a. Title, number, and date of specification.

6.2.1 Indirect shipments. The preservation and packaging, packing, and marking specified in Section 5 apply only to direct purchase by or direct shipment to the Government and are not intended to apply contracts or orders between the supplier and prime contractor unless so specified.

6.3 Qualification. With respect to products requiring qualification, awards will be made only for products which are, at the time of award of contract, qualified for inclusion in Qualified Products List QPL No. 3950 whether or not such products have actually been so listed by that date. The attention of the contractors is called to these requirements, and manufacturers are urged to arrange to have the products that they propose to offer to the Federal Government tested for qualification in order that they may be eligible to be awarded contracts or orders for the products covered by this specification. Information pertaining to qualification of products may be obtained from via email to vqp.chief@dla.mil or from the DLA Land and Maritime, Attn: VQP, 3990 East Broad Street, Columbus, OH 43213-1199. An online listing of products qualified to this specification may be found in the Qualified Products Database (QPD) at https://assist.dla.mil.

6.4 Luminescent tips. Luminescent material should conform to ASTM-E2072, ASTM-E2073, or ASTM-E2030 (Luminescent Material and Equipment, Nonradioactive).

6.5 Panel seals. Panel seals should be in accordance with MIL-DTL-5423/16 (Seal, Bushing, External).

6.6 Switch guards. When switch guards are required, they should be in accordance with MIL-DTL-7703 (Guard, Switch, General Specification for).

6.7 Dissimilar metals (See 3.4.1.1). Dissimilar metals and compatibility couples are defined in MIL-STD-889.

6.8 Military standard part numbering. In order to provide uniform part numbering and format, MS27740 (Switches, MIL-DTL-3950 and MIL-DTL-83731, Military Standard Part Numbering) should be followed.

Downloaded from http://www.everyspec.com

6.9 Tin whisker growth. The use of alloys with tin content greater than 97 percent, by mass, may exhibit tin whisker growth problems after manufacture. Tin whiskers may occur anytime from a day to years after manufacture and can develop under typical operating conditions, on products that use such materials. Conformal coatings applied over top of a whisker-prone surface will not prevent the formation of tin whiskers. Alloys of 3 percent lead, by mass, have shown to inhibit the growth of tin whiskers. For additional information on this matter, refer to ASTM-B545 (Standard Specification for Electrodeposited Coatings of Tin).

6.10 Subject term (key word) listing.

Boots
Guards
Salt spray
Hydraulic fluid
Fuel
Protected

6.11 Environmentally preferable material. Environmentally preferable materials should be used to the maximum extent possible to meet the requirements of this specification. As of the dating of this document, the U.S. Environmentally Protection Agency (EPA) is focusing efforts on reducing 31 priority chemicals. The list of chemicals and additional information is available on their website at http://www.epa.gov/osw/hazard/wastemin/priority.htm. Included in the list of 31 priority chemicals are cadmium, lead, and mercury. Use of the materials on the list should be minimized or eliminated unless needed to meet the requirements specified herein (see section 3).

6.12 Margins Marked. The margins of this specification are marked with vertical lines to indicate where modifications from this amendment were made. This was done as a convenience only and the Government assumes no liability whatsoever for any inaccuracies in these notations. Bidders and contractors are cautioned to evaluate the requirements of this document based on the entire content irrespective of the marginal notations.

Downloaded from http://www.everyspec.com

APPENDIX A

Procedure for Qualification Inspection. Mounting and Terminal Hardware.

A.1 SCOPE.

A.1.1 Scope. This appendix details the procedure for submission of samples for qualification and Group B inspection of toggle switches covered by this specification. This appendix also lists mounting and terminal hardware used with toggle switches covered by this specification. Mounting and terminal hardware should be of the following design and construction as specified (see 3.1). This appendix is a mandatory part of this specification. The information contained herein is intended for compliance.

A.2. Samples.

A.2.1 Qualification. For qualification inspection, the sample size shall be as specified in table II and the tests shall be performed in the sequence shown.

A.2.1.2 Single submission. A sample consisting of the required number of specimens of each switch shall be submitted. Qualification shall be restricted to the type submitted.

A.2.1.3 Group submission. A sample consisting of the required number of specimens of each basic switch listed in table A-I shall be submitted and shall be subjected to the qualification test sequence of table II in the order shown. In addition, two specimens of each of the other switches listed in table A-I shall be submitted and shall be subjected to the examination of produce and switching characteristics test of table II.

A.2.2 Group B inspection. Sample units shall be selected at random from lost that have passed group A inspection.

A.2.2.1 Single submission. The sample size shall be as specified in table V and the tests shall be performed in the order shown.

A.2.2.2 Group submission. A sample consisting of the required number of specimens of each basic switch listed in table A-I shall be subjected to the test sequence of table V in the order shown. In addition, two specimens of each of the other switches listed in table A-I shall be submitted and shall be subjected to the examination of product and switching characteristic test of table V. If the basic switches of a group are not in production at the time of selection of samples, other switches of the same group may be submitted, but maintained action switches shall not be substituted for momentary action switches.

Downloaded from http://www.everyspec.com

TABLE A-I. Group submission for qualification inspection for complete listing.

Basic switch (all applicable tests)	Additional switches (examination of product and switching characteristics)	Basic switch (all applicable tests)	Additional switches (examination of product and switching characteristics)
MS24523-21	MS24523-24	MS27734-21	---
MS24523-27	MS24523-32	MS27734-27	---
MS24524-21	MS24524-24	MS27738-21	---
MS24524-27	MS24524-32	MS27738-27	---
MS24525-21	MS24525-24	MS27739-21	---
MS24525-27	MS24525-32	MS27739-27	---
MS24658-21	MS24658-24	MS27781-21	---
MS24658-27	MS24658-32	MS27781-27	---
MS24659-21	MS24659-24	MS27782-21	---
MS24659-27	MS24659-32	MS27782-27	---
MS24660-21	MS24660-24	MS27783-21	---
MS24660-27	MS24660-32	MS27783-27	---
MS27406-2	MS27406-3	MS27784-21	---
		MS27784-27	---
MS27407-2	MS27407-3		
		MS27785-21	---
MS27408-2	MS27408-3	MS27785-27	---
MS27409-2	MS27409-3	MS27786-21	---
		MS27786-27	---
MS27722-21	---		
MS27722-27	---	MS27787-21	---
		MS27787-27	---
MS27723-21	---		
MS27723-27	---	MS27788-21	---
		MS27788-27	---
MS27724-21	---		
MS27724-27	---	MS27789-21	---
		MS27789-27	---

Downloaded from http://www.everyspec.com

A.3. Mounting hardware. Cadmium should not be used.

A.3.1 Nut, plain, hexagon electrical, thin:

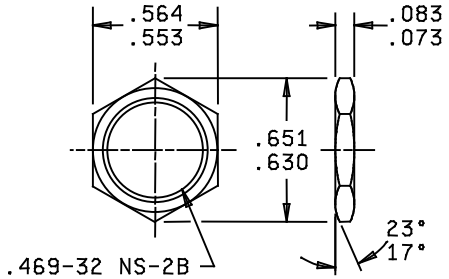

Inches	mm
.073	1.85
.083	2.11
.468	11.89
.553	14.05
.564	14.33
.630	16.00
.651	16.54

Brass	Material	ASTM B16, alloy UNS C36000
	Finish	Nickel plate SAE-AMS-QQ-N-290, class 1, grade G (matte)
	MIL hardware	Can be replaced by MS25082-B21
Steel	Material	SAE-AMS-STD-66, 55, 000 PSI (min sulfur or phosphorus shall not exceed 0.05 by weight)
	Finish	Suitably protected to resist corrosion
	MIL hardware	Can be replaced by MS25082-8
Cres	Material	SAE-AMS-STD-66
	Finish	Passivated
	MIL hardware	Can be replaced by MS25082-C8

A.3 Washer, lock, flat, internal tooth.

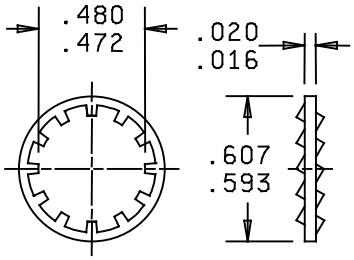

Inches	mm
.016	0.41
.020	0.51
.472	11.99
.480	12.19
.593	15.06
.607	15.42

Steel	Material	FF-W-100
	Finish	Suitably protected to resist corrosion
	MIL hardware	Can be replaced by NASM35333-126
Cres	Material	FF-W-100
	Finish	Passivated
	MIL hardware	Can be replaced by NASM35333-136

Downloaded from http://www.everyspec.com

A.3.3 Washer, key.

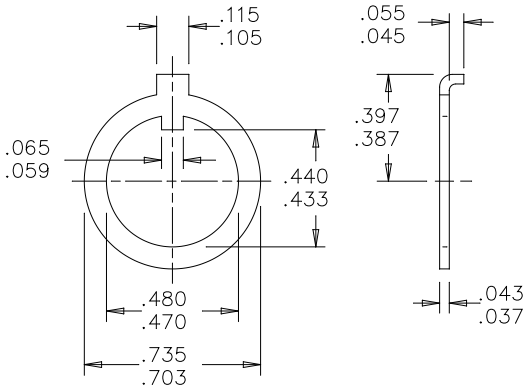

Inches	mm	Inches	mm
.037	0.94	.387	9.83
.043	1.09	.397	10.08
.045	1.14	.433	11.00
.055	1.40	.440	11.18
.059	1.50	.470	11.94
.065	1.65	.480	12.19
.105	2.67	.703	17.86
.115	2.92	.735	18.67

Steel	Material	QQ-S-698
	Finish	Suitably protected to resist corrosion
	MIL hardware	Can be replaced by MS25081-4
Cres	Material	SAE-AMS-STD-66
	Finish	Passivated
	MIL hardware	Can be replaced by MS25081-C4

A.4. Terminal hardware. Cadmium should not be used.

A.4.1 Terminal screw (pan head) Slotted or Cross Recessed.

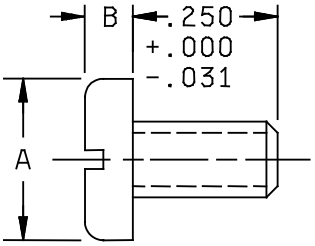

Thread size	A		B	
	Min	Max	Min	Max
.138-32 UNC-2A	.256	.270	.072	.082
.164-32 UNC-2A	.306	.322	.085	.096

Brass	Material	ASTM B16, alloy UNS C3600 or C26000
	Finish	Silver plate, tin plate or nickel plate SAE-AMS-QQ-N-290, class 1, grade G (matte)
	MIL hardware	None
Steel	Material	SAE-AMS-STD-66, 55,000 PSI (min sulfur or phosphorus shall not exceed 0.05 by weight)
	Finish	Suitably protected to resist corrosion
	MIL hardware	Can be replaced by NASM35206-226 (.138-32) & NASM35206-241 (.164-32)
Cres	Material	SAE-AMS-STD-66
	Finish	Passivated
	MIL hardware	Can be replaced by MS51957-26 (.138-32) & MS51957-41 (.164-32)

Downloaded from http://www.everyspec.com

A.4.2 Screw with captive internal tooth lockwasher.

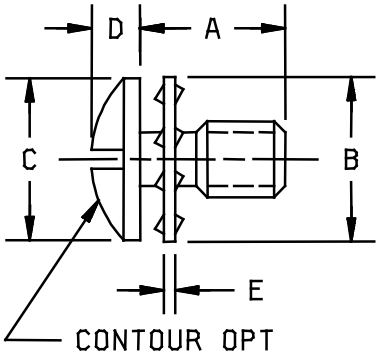

Thread size	A	B	C	D	E
.138-32 UNC-2A	.260 .219	.295 .265	.290 .256	.087 .071	.020 .016
.164-32 UNC-2A	.250 .219	.338 .327	.322 .306	.096 .085	.022 .018

Screw (Brass)	Material	ASTM B16, alloy UNS C36000 or C26000
	Finish	Suitably protected to resist corrosion
	MIL hardware	Can be replaced by MS51957-26 (Cross Recessed Head)
Lockwasher (Phos bronze)	Material	ASTM B139, alloy UNS C51000
	Finish	Suitably protected to resist corrosion
	MIL hardware	NASM35333-105(.138) or NASM35333-106(.164)

A.4.3 Washer, lock-spring, helical series

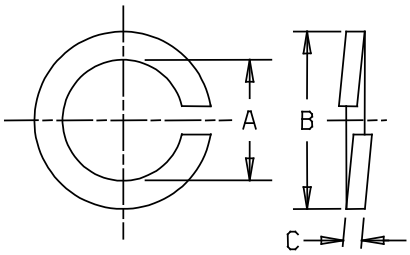

A		B	C	
Min	Max	Max	Min	Max
.141	.151	.253	.031	.037
.168	.178	.296	.040	.046

Steel	Material	SAE-AMS- QQ-S-700
	Finish	Suitably protected to resist corrosion
	MIL hardware	Can be replaced by NASM35338-41 (.138) & NASM35338-42 (.164)
Cres	Material	SAE-AMS-STD-66
	Finish	Passivated
	MIL hardware	Can be replaced by NASM35338-155 (.138) & NASM35338-156 (.164)
Bronze	Material	ASTM B139, alloy UNS C51000
	Finish	Suitably protected to resist corrosion
	MIL hardware	Can be replaced by NASM35338-98 (.138) & NASM35338-99 (.164)

NOTES:
1. Captive washers shall rotate freely on the terminal screw.
2. The terminal screws with the captive internal tooth lockwasher shall be threaded to within .024 of the lockwasher.
3. The terminal screw (pan head) shall be used in conjunction with the helical series lock-spring washer.
4. Dimensions are in inches.
5. Metric equivalents (to the nearest .01 mm) are given for general information only and are based upon 1 inch = 25.4 mm.

Downloaded from http://www.everyspec.com

A.4.4 Terminal screw with captive split ring lockwasher.

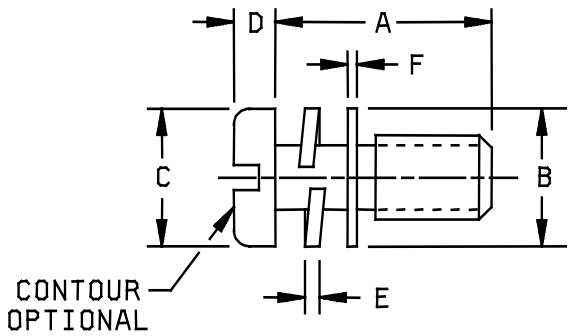

Inches	mm
0.010	0.25
0.020	0.51
0.031	0.79
0.037	0.94
0.071	1.80
0.087	2.21
0.138	3.51
0.248	6.30
0.256	6.50
0.265	6.73
0.280	7.11
0.290	7.37

		Thread size	A	B	C	D	E	F
		.138-32 UNC-2A	.280 .248	.265 Max	.290 .256	.087 .071	.037 .031	.020 .010
Screw (steel)	Material	SAE-AMS-STD-66						
	Finish	Suitably protected to resist corrosion						
Helical Lockwasher (steel)	Material	SAE-AMS-STD-66						
	Finish	Suitably protected to resist corrosion						
Flat washer (steel)	Material	SAE-AMS-STD-66						
	Finish	Suitably protected to resist corrosion						
Military hardware		Can be replaced with NASM35206-226 screws and NASM35338-41 lockwashers.						

Downloaded from http://www.everyspec.com

Custodians:
Army - CR
Navy - AS
Air Force - 85
DLA - CC

Review activities:
Army - AR, AT, AV, MI
Navy - MC
Air Force – 99

Preparing activity:
DLA - CC

(Project: 5930-2014-004)

NOTE: The activities listed above were interested in this document as of the date of this document. Since organizations and responsibilities can change, you should verify the currency of the information above using the ASSIST Online database at https://assist.dla.mil/ .