Downloaded from http://www.everyspec.com

INCH-POUND

MIL-DTL-3933H
w/ AMENDMENT 3
10 October 2007
SUPERSEDING
MIL-DTL-3933H
w/ AMENDMENT 2
12 December 2006

DETAIL SPECIFICATION

ATTENUATORS, FIXED
GENERAL SPECIFICATION FOR

This specification is approved for use by all Departments and Agencies of the Department of Defense.

1. SCOPE

1.1 Scope. This specification covers the general requirements for radio and microwave frequency fixed attenuators, including chip, coaxial, leaded, relay header and waveguide attenuators (see 6.1).

1.2 Classification. Attenuators are of the following classes, specified in 6.2 and appendix B, table B-I:

Class I - For use as the primary standard.
Class II - For use as a secondary standard and in laboratory and precision test equipment.
  A. With lumped-constant or distributed shunt and series elements.
  B. With lossy-line pads.
Class III - For use in general field equipment.
Class IV - For use in equipment in which precision and stability are secondary considerations.

1.3 Device substitutions. A device of higher classification level may be substituted for the same basic PIN device of a lower classification level. Classification levels, in descending order, are as follows: Class I, Class II, Class III, and Class IV. Also, a screened device (S) may be substituted for the same unscreened (N) PIN (see 1.4). Any part(s) being used for substitution may retain its original marking, or the PIN may be remarked. Lot records shall maintain traceability of any remarking.

1.4 Part or Identifying Number (PIN). The military PIN consists of the letter "M" followed by the basic number of the specification sheet, an assigned dash (see 3.1), and the letter N or S; where N indicates non-screened and S indicates screened items. PINs without N or S are considered non-screened items.

M 3933/14- 01 N or S

Military designator and specification sheet number

Dash number designated on specification sheet

N: Non-screened
S: Screened

Comments, suggestions, or questions on this document should be addressed to Defense Supply Center Columbus, ATTN: DSCC-VAT, P.O. Box 3990, Columbus, OH 43218-3990 or e-mailed to TubesAmps@dscc.dla.mil. Since contact information can change, you may want to verify the currency of address information using the ASSIST Online database at http://assist.daps.dla.mil.

AMSC N/A FSC 5985

Downloaded from http://www.everyspec.com

2. APPLICABLE DOCUMENTS

2.1 General. The documents listed in this section are specified in sections 3, 4, or 5 of this specification. This section does not include documents cited in other sections of this specification or recommended for additional information or as examples. While every effort has been made to ensure the completeness of this list, document users are cautioned that they must meet all specified requirements of documents cited in sections 3, 4, or 5 of this specification, whether or not they are listed.

2.2 Government documents.

2.2.1 Specifications, standards, and handbooks. The following specifications, standards, and handbooks form a part of this document to the extent specified herein. Unless otherwise specified, the issues of these documents are those cited in the solicitation or contract (see 6.2).

DEPARTMENT OF DEFENSE SPECIFICATIONS

MIL-DTL-85	-	Waveguides, Rigid, Rectangular, General Specification for.
MIL-DTL-3890	-	Lines, Radio Frequency Transmission (Coaxial, Air Dielectric), General Specification for.
MIL-DTL-3922	-	Flanges, Waveguide, General Purpose, General Specification for.
MIL-H-28719	-	Header, Hermetically Sealed.
MIL-PRF-39012	-	Connectors, Coaxial, Radio Frequency, General Specification for.
MIL-DTL-55302	-	Connectors, Printed Circuit Subassembly and Accessories.

(See supplement 1 for list of associated specification sheets.)

DEPARTMENT OF DEFENSE STANDARDS

MIL-STD-130	-	Identification Marking of US Military Property.
MIL-STD-202	-	Electronic and Electrical Component Parts.
MIL-STD-790	-	Established Reliability and High Reliability Qualified Products List (QPL) Systems for Electrical, Electronic, and Fiber Optic Parts Specifications.
MIL-STD-883	-	Microcircuits.
MIL-STD-889	-	Dissimilar Metals.
MIL-STD-1276	-	Leads for Electronic Component Parts.

(Copies of these documents are available online at http://assist.daps.dla.mil or from Standardization Document Order Desk, 700 Robbins Avenue, Building 4D, Philadelphia, PA 19111-5094.)

2.3 Non-Government publications. The following documents form a part of this document to the extent specified herein. Unless otherwise specified, the issues of these documents are those cited in the solicitation or contract (see 6.2).

Downloaded from http://www.everyspec.com

NATIONAL CONFERENCE OF STANDARDS LABORATORIES (NCSL)

NCSL-Z540.1	-	Calibration Laboratories and Measuring and Test Equipment (DoD adopted).

(Copies are available online at http://www.ncsli.org or from National Conference of Standards Laboratories [NCSL], 2995 Wilderness Place Suite 107, Boulder, Colorado 80301-5405.)

ASTM INTERNATIONAL

ASTM-A582/A582M	-	Free-Machining Stainless Steel Bars (DoD adopted).
ASTM-B16/B16M	-	Free Cutting Brass Rod, Bar and Shapes, For Use in Screw Machines (DoD adopted).
ASTM-B36/B36M	-	Brass Plate, Sheet, Strip, and Rolled Bar (DoD adopted).
ASTM-B121/B121M	-	Leaded Brass Plate, Sheet, Strip, and Rolled Bar (DoD adopted).
ASTM-B124/B124M	-	Copper and Copper Alloy Forging Rod, Bar, and Shapes.
ASTM-B194	-	Copper-Beryllium Alloy Plate, Sheet, Strip, and Rolled Bar (DoD adopted).
ASTM-B196/B196M	-	Copper-Beryllium Alloy Rod and Bar (DoD adopted).
ASTM-B197/B197M	-	Copper-Beryllium Alloy Wire (DoD adopted).
ASTM-B488	-	Electrodeposited Coatings of Gold for Engineering Uses (DoD adopted).
ASTM-B700	-	Electrodeposited Coatings of Silver for Engineering.
ASTM-E595	-	Total Mass Loss and Collected Volatile Condensable Materials from Outgassing in a Vacuum Environment (DoD adopted).

(Copies are available online at http://www.astm.org or from ASTM International, 100 Barr Harbor Drive, West Conshohocken, PA 19428-2959.)

ELECTRONIC INDUSTRIES ALLIANCE (EIA)

EIA-557	-	Statistical Process Control Systems (DoD adopted).

(Copies are available online at http://www.eia.org or from Electronic Industries Alliance, Corporate Engineering Department, 2500 Wilson Boulevard, Arlington, VA 22201.)

INSTITUTE OF ELECTRICAL AND ELECTRONICS ENGINEERS (IEEE)

IEEE-287	-	IEEE Standard for Precision Coaxial Connectors.

(Copies are available online at http://www.ieee.org or from IEEE Service Center, 445 Hoes Lane, P. O. Box 1331, Piscataway, NJ 08855-1331.)

INTERNATIONAL ORGANIZATION FOR STANDARDIZATION (ISO)

ISO10012-1	-	Quality Assurance Requirements for Measuring Equipment, Part 1: Metrological Conformation System for Measuring Equipment (DoD adopted).

(Copies are available online at http://info@ansi.org or http://dod.nssn.org or from American National Standards Institute, 13th Floor, 11 West 42nd Street, New York, NY 10036-0350.)

Downloaded from http://www.everyspec.com

SAE INTERNATIONAL (SAE)

SAE-AMS2422	-	Plating, Gold.
SAE-AMS4375	-	Sheet and Plate, Magnesium Alloy (3.0 Al - 1.0 Zn - 0.20 Mn) (AZ31B-0) Annealed and Re-crystallized (DoD adopted).
SAE-AMS4376	-	Plate, Magnesium Alloy (3.0 Al - 1.0 Zn - 0.20 Mn (AZ31B-H26)), Cold Rolled and Partially Annealed (DoD adopted).
SAE-AMS4377	-	Sheet and Plate, Magnesium Alloy (3.0 Al - 1.0 Zn - 0.20 Mn) (AZ31B-H24), Cold Rolled, Partially Annealed (DoD adopted).

(Copies are available SAE International, 400 Commonwealth Drive, Warrendale, PA 15096-0001 or http://www.sae.org.)

2.4 Order of precedence. In the event of a conflict between the text of this document and the references cited herein (except for related specification sheets), the text of this document takes precedence. Nothing in this document, however, supersedes applicable laws and regulations unless a specific exemption has been obtained.

3. REQUIREMENTS

3.1 Specification sheets. The individual item requirements shall be as specified herein and in accordance with the applicable specification sheets. In the event of any conflict between requirements of this specification and the specification sheet, the latter shall govern.

3.2 Qualification. Attenuators furnished under this specification shall be products qualified for listing on the applicable qualified products list at the time set for opening of bids (see 4.5, 6.3 and appendix C).

3.2.1 QPL system. The manufacturer shall establish and maintain a QPL system for parts covered by this specification. Requirements for this system are specified in MIL-STD-790 (see 4.1). In addition, the manufacturer shall either establish a Statistical Process Control (SPC) system that meets the requirements of 3.2.2 below, or employ Statistical Quality Control (SQC) techniques as described in 3.2.3 below.

3.2.2 SPC system. As part of the overall MIL-STD-790 QPL system, the manufacturer shall establish an SPC system that meets the requirements of EIA-557 (see 4.1).

3.2.3 SQC techniques. As an alternative to establishing an SPC system, the manufacturer may, with qualifying activity approval (see 6.3), employ various SQC techniques (such as trend charts, Pareto charts, run charts, check charts histograms and flow charts).

3.3 Material. The material shall be as specified herein and in the applicable specification sheets. When a definite material is not specified, a material shall be used which will enable the attenuator to meet the performance requirements of this specification. Acceptance or approval of any constituent material shall not be construed as a guaranty of the acceptance of the finished product.

3.3.1 Brass. Brass shall conform to ASTM-B16/B16M, ASTM-B36/B36M, ASTM-B121/B121M, or ASTM-B124/B124M.

3.3.2 Copper alloy. Copper alloy used in fabrication of waveguide-type attenuators shall conform to the requirements for copper alloy specified in MIL-DTL-85. Copper alloy used in the fabrication of coaxial-type attenuators shall conform to the material requirements specified in MIL-DTL-3890.

Downloaded from http://www.everyspec.com

3.3.3 Copper-beryllium. When specified, copper-beryllium alloy shall conform to ASTM-B194, ASTM-B196/B196M, or ASTM-B197/B197M.

3.3.4 Aluminum alloy. Aluminum alloy used in the fabrication of waveguide-type attenuators shall conform to the requirements for aluminum alloy specified in MIL-DTL-85.

3.3.5 Magnesium alloy. Magnesium alloy shall be composition AZ31B, condition H24, conforming to SAE-AMS-4375, SAE-AMS-4376, and SAE-AMS-4377. When specified (see 3.1 and 6.2), magnesium attenuators shall be supplied.

3.3.6 Dissimilar metals. Unless suitably protected against electrolytic corrosion, dissimilar metals (see MIL-STD-889) shall not be used in intimate contact with each other. Dissimilar metals are defined as metal specimens that are in contact or otherwise electrically connected to each other in a conductive solution and that generate an electric current.

3.3.7 Pure tin. The use of pure tin, as an underplate or final finish, is prohibited both internally and externally. Tin content of radio and microwave frequency fixed attenuator components and of solder shall not exceed 97 percent, by mass. Tin shall be alloyed with a minimum 3 percent lead, by mass (see 6.7).

3.4 Design and construction. Attenuators shall be of the design, construction, and physical dimensions specified (see 3.1). Attenuators shall be of the lightest practicable weight consistent with the strength required for sturdiness, safety, and reliability.

3.4.1 Operating frequency range. The frequency range shall be as specified (see 3.1).

3.4.2 Nominal impedance. The nominal impedance for attenuators shall be as specified (see 3.1).

3.4.3 Flange. Flanges shall be so designed and manufactured as to provide the mating characteristics of the flange specified in accordance with MIL-DTL-3922.

3.4.4 Connectors. The connectors shall be as specified (see 3.1). The material and gauging for receptacle socket contact (female) and for pin contact (male) connectors shall conform to the requirements of MIL-PRF-39012. Male connectors shall meet the coupling proof torque, contact push, contact retention and rotational contact retention requirements. Female connectors shall meet requirements for engaging/disengaging forces, contact retention and rotational contact retention. When specified (see 3.1), precision connectors shall be in accordance with IEEE-STD-287.

Downloaded from http://www.everyspec.com

3.4.4.1 Connector metal parts. Unless otherwise specified, the male center contact pins shall be captivated and made of corrosion resisting steel, type 302 or 304 (see 6.5), type 303 in accordance with ASTM-A582/A582M or beryllium copper, or equivalent[1] material, conforming to ASTM-B194, ASTM-B196/B196M, or ASTM-B197/B197M. Beryllium copper, or equivalent[1] material, parts shall be gold plated in accordance with SAE-AMS2422 and ASTM-B488 over a nickel plate. Stainless steel parts shall be silver plated in accordance with ASTM-B700, type II, grade A or gold plated in accordance with SAE-AMS2422. The female center contact pins shall be captivated and made of beryllium copper, or equivalent[1] material, conforming to ASTM-B194, ASTM-B196/B196M, or ASTM-B197/B197M and when specified (see 3.1), gold plated in accordance with SAE-AMS2422 and ASTM-B488 with 99.7 percent gold minimum, Knoop hardness 130 - 300, inclusive, .00005 inch (0.0013 mm) minimum gold thickness over a nickel plate. Nickel is used only when specifications cannot be met using alternate material means.

3.4.4.2 Printed circuit connectors. Printed circuit connectors for a specific attenuator shall conform to MIL-DTL-55302.

3.4.5 Leads. Unless otherwise specified, lead connections for a specific attenuator shall be a chemical composition conforming to MIL-STD-1276 and shall be solderable.

3.4.6 Socket pins. Socket pins for a specific attenuator shall conform to MIL-H-28719 as applicable.

3.4.7 Weight. The weight for attenuators shall be as specified (see 3.1).

3.4.8 External finish. The external finish of attenuators shall be as specified (see 3.1).

3.4.9 Temperature range. Operating/non-operating temperature range shall be as specified (see 3.1).

3.5 Performance.

3.5.1 Screening (see 4.7.2). All screened attenuators produced to this specification shall be screened in accordance with table I in the order shown. After screening, the attenuator shall be subjected to and pass group A inspection (see 4.6.1.3). Screening requirements shall consist of 3.5.1.1 through 3.5.1.6.

3.5.1.1 Thermal shock. Screen attenuators in accordance with 4.7.2.1.

3.5.1.2 Conditioning. Screen attenuators in accordance with 4.7.2.2.

3.5.1.3 Pre-burn-in electrical. Screen attenuators in accordance with 4.7.2.3.

3.5.1.4 Burn-in. Screen attenuators in accordance with 4.7.2.4.

3.5.1.5 Post burn-in electrical. Screen attenuators in accordance with 4.7.2.5. After attenuators are screened in accordance with 4.7.2.5, they shall pass the delta limit criteria of 4.7.2.5.

3.5.1.6 Radiographic. Screen attenuators in accordance with 4.7.2.6. After attenuators are screened in accordance with 4.7.2.6, they shall satisfy all detail criteria listed in 4.7.2.6.

[1] Equivalent material is that which meets all the required electrical, mechanical, and environmental requirements of the male or female center contact pins.

Downloaded from http://www.everyspec.com

3.5.2 Coaxial connector wear resistance. When attenuators with coaxial connectors are tested as specified in 4.7.3, there shall be no damage to the connectors that will cause electrical failure. During and after cycling, neither lubrication nor removal of excess material shall be permitted. After this test, attenuators shall meet the requirements of 3.5.3 and 3.5.4.

3.5.3 Voltage standing wave ratio (VSWR) (at either end). When attenuators are tested as specified in 4.7.4, the VSWR at room temperature shall not exceed the value specified.

3.5.4 Attenuation. When attenuators are tested as specified in 4.7.5, the attenuation at room temperature shall be as specified. The deviation from nominal value shall not exceed the applicable value in the specification sheet (see 3.1).

3.5.5 Electromagnetic interference (RF leakage) (for coaxial and waveguide attenuators). When attenuators are tested as specified in 4.7.6, the RF leakage from the attenuator shall be at least 65 dB below the incoming signal level.

3.5.6 Coaxial connector repeatability. After attenuators are tested as specified in 4.7.7, the variation of attenuation shall not exceed the applicable value in the specification sheet (see 3.1).

3.5.7 Solderability (as applicable). When attenuators with solderable connections are tested as specified in 4.7.8, there shall be no evidence of pinholes and blistering.

TABLE I. Screening.

Inspection	Requirement paragraph	Test method paragraph
Thermal shock	3.5.1.1	4.7.2.1
Conditioning	3.5.1.2	4.7.2.2
Pre-burn-in electrical:	3.5.1.3	4.7.2.3
DC resistance 1/	3.5.1.3	4.7.2.3.1
VSWR 2/	3.5.1.3, 3.5.3	4.7.2.3.2, 4.7.4
Attenuation 2/	3.5.1.3, 3.5.4	4.7.2.3.3, 4.7.5
Burn-in 240 hours	3.5.1.4	4.7.2.4
Post-burn-in electrical:	3.5.1.5	4.7.2.5
DC resistance 1/	3.5.1.5	4.7.2.5
VSWR 2/	3.5.1.5	4.7.2.5
Attenuation 2/	3.5.1.5	4.7.2.5
Radiographic inspection	3.5.1.6	4.7.2.6
Group A	3.5.1	4.6.1.3

1/ Not applicable for waveguide attenuators.
2/ These tests will satisfy VSWR and attenuation conformance inspection in Group A prior to stability of attenuation: after peak power.

3.5.8 Terminal strength/lead integrity (as applicable). When attenuators with terminals or leads are tested as specified in 4.7.9, there shall be no evidence of a broken terminal or lead, elongation greater than one-half of the thread pitch, or breakage, loosening, or relative motion between the terminals and the attenuator body when viewed through a magnification of at least 10X. Any of these shall be a failure.

Downloaded from http://www.everyspec.com

3.5.9 Resistance to solvents. When attenuators are tested as specified in 4.7.10, there shall be no evidence of illegible marking, mechanical damage, or deterioration of material or finishes to the extent that they can be readily identified from a distance of at least six inches with normal room lighting and without the aid of magnification or with a viewer having a magnification no greater than 3X.

3.5.10 Stability of attenuation. When attenuators are tested as specified in 4.7.11, the attenuation change after temperature change, thermal shock, vibration, shock, moisture resistance, salt spray or peak power shall not exceed the applicable value specified in the specification sheet (see 3.1). After the salt spray test, there shall be no evidence of corrosion or pitting.

3.5.11 Sensitivity of attenuation. When computed as specified in 4.7.12, the sensitivity of attenuation of attenuators with frequency, with power, and with temperature shall not exceed the maximum sensitivity of attenuation specified in the appropriate specification sheet.

3.5.12 Life. When attenuators are tested as specified in 4.7.13, the attenuation change shall not exceed the value that was measured for temperature stability under 3.5.4.

3.5.13 Force to engage/disengage. When attenuators are tested as specified in 4.7.14, the torque necessary to completely couple or uncouple the connectors shall not exceed that specified in the applicable specification sheet of MIL-PRF-39012 (see 3.1).

3.5.14 Coupling proof torque. When attenuators are tested as specified in 4.7.15, the coupling mechanism shall not be dislodged and the connector interface dimensions shall remain as specified in the applicable specification sheet of MIL-PRF-39012 (see 3.1).

3.6 Marking. Attenuators shall be marked in accordance with MIL-STD-130, with the class (see 1.2), military PIN (see 1.4), manufacturer's source code or logo, attenuation in dB, frequency range, average power rating, date code, and serialization. When available marking space is less than .15 square inches (97 square millimeters), the following criteria may be deleted from marking in the following order, but only as space restrictions require: average power rating, frequency range, class, and attenuation. Marking characters shall be at least .031 inch (0.79 mm) high. The marking shall be placed on the attenuator using a method providing legible and permanent marking for the life of the attenuator. The marking location is optional. Marking locations indicated in individual slash sheets are suggested locations. When practicable, a location shall be picked that will be least likely to be covered in attenuator installation.

3.6.1 Date code. Attenuators shall be marked by a unique code to identify the period during which they were manufactured. The first two numbers in the code shall be two digits of the number of the year, and the third and fourth number shall be two digits indicating the calendar week of the year. When the number of the week is a single digit, it shall be proceeded by a zero reading from left to right or from top to bottom, the code number shall designate the year and week, in that order. The date code shall not be altered or removed from the attenuator.

3.6.2 Serialization. Each attenuator shall be marked with a unique serial number assigned consecutively within the inspection lot allowing traceability of the attenuator.

3.7 Recycled, recovered, or environmentally preferable materials. Recycled, recovered, or environmentally preferable materials should be used to the maximum extent possible, provided that the material meets or exceeds the operational and maintenance requirements, and promotes economically advantageous life cycle costs.

Downloaded from http://www.everyspec.com

3.8 Workmanship. Attenuators shall be processed in such a manner as to be uniform in quality and shall be free from sharp edges and burrs, except where sharp edges are required for mechanical or electrical reasons.

4. VERIFICATION

4.1 Test equipment, inspection facilities, QPL, and SPC/SQC systems. Test and measuring equipment and inspection facilities of sufficient accuracy, quality, and quantity to permit performance of the required inspection shall be established and maintained by the contractor. Establishment and maintenance of a calibration system to control the accuracy of the measuring and test equipment shall be in accordance with NCSL-Z540.1 or ISO10012-1. Establishment and maintenance of a QPL system shall be in accordance with MIL-STD-790. Establishment and maintenance of a Statistical Process Control (SPC) system, as appropriate and determined by the manufacturer, shall be in accordance with EIA-557 (see 3.2.1 and 3.2.2). With qualifying activity approval (see 6.3), various Statistical Quality Control (SQC) techniques (such as trend charts, Pareto charts, run charts, check sheets, histograms and flow charts) may be used in lieu of an SPC system.

4.2 Classification of inspection. The inspection requirements specified herein are classified as follows:

a. Material inspection (see 4.3).

b. Qualification inspection (see 4.5).

c. Conformance inspection (see 4.6).

4.3 Materials inspection. Materials inspection shall consist of certification supported by verifying data that the materials listed in table II, used in fabricating the attenuator, are in accordance with the applicable referenced specifications or requirements prior to such fabrication.

TABLE II. Materials inspection.

Material	Requirement paragraph	Applicable specification
Brass	3.3.1	ASTM-B16/B16M, ASTM-B36/B36M, ASTM-B121/B121M, ASTM-B124/B124M
Copper alloy	3.3.2	MIL-DTL-85, MIL-L-3890
Copper-beryllium	3.3.3	ASTM-B194, ASTM-B196/B196M, ASTM-B197/B197M
Aluminum alloy	3.3.4	MIL-DTL-85
Magnesium alloy	3.3.5	SAE-AMS4375, SAE-AMS4376, SAE-AMS4377

4.4 Inspection conditions. Unless otherwise specified herein, all inspections shall be performed in accordance with the test conditions specified in the “GENERAL REQUIREMENTS” of MIL-STD-202.

4.4.1 Test method variation. Variation from the specified test methods used to verify the electrical parameters is allowed provided that it is demonstrated to the preparing activity or their agent that such variations in no way relax the requirements of this specification and that they are approved before testing is performed. For proposed test variations, a test method comparative error analysis shall be made available for checking by the preparing activity or their agent.

Downloaded from http://www.everyspec.com

4.5 Qualification inspection. Qualification inspection shall be performed at a laboratory acceptable to the Government (see 6.3) on sample units produced with equipment and procedures normally used in production. Qualification obtained for each group (see appendix A) shall constitute qualification for all attenuators with characteristics for that group (see table III). Appendix C establishes qualification inspection requirements for radio and microwave frequency surface mount chip attenuators for use in established reliability electronic applications.

4.5.1 Sample size. Four samples of the same specification sheet (see 3.1) and PIN shall be subjected to qualification inspection.

4.5.2 Inspection routine. The sample shall be subjected to the qualification inspection specified in table III, in the order shown. All units shall be subjected to the inspection of group I. The sample shall then be divided into two groups of two units each (see 4.5.1). The sample units shall then be subjected only to the inspections indicated for their particular group.

4.5.3 Failures. One or more failures shall be cause for refusal to grant qualification approval. A failure shall be anything that does not meet the requirements of the specification.

4.5.4 Disposition of qualification sample units. Sample units which have been subjected to qualification testing shall not be delivered on any contract or purchase order. The Government reserves the right to retain the sample units or to require the contractor to furnish the sample units with the qualification inspection report.

4.5.5 Retention of qualification. To retain qualification, the contractor shall forward a report at 24-month intervals to the qualifying activity (see 6.3). The qualifying activity shall establish the initial reporting date. The report shall consist of:

a. A summary of the results of the tests performed for inspection of product for delivery (group A), indicating as a minimum the number of attenuators that have passed and the number that have failed. The results of the tests of all reworked attenuators shall be identified and accounted for.

b. A summary of the results of tests performed for periodic inspection (group B), including the number and mode of failures. The summary shall include results of all periodic inspection tests performed and completed during the 24-month period. If the summary of test results indicates nonconformance with specification requirements, and corrective action acceptable to the qualifying activity has not been taken, action shall be taken to remove the failing product from the qualified products list.

Failure to submit the report within 60 days after the end of each 24-month period shall result in loss of qualification for the product. In addition to the periodic submission of inspection data, the contractor shall immediately notify the qualifying activity at any time during the 24-month period that the inspection data indicates failure of the qualified product to meet the requirements of this specification.

In the event that no production occurred during the reporting period, a report shall be submitted certifying that the company still has the capabilities and facilities necessary to produce the attenuators. If during the two consecutive reporting periods there has been no production, the manufacturers may be required, at the discretion of the qualifying activity, to submit his qualified products to testing in accordance with the qualification inspection requirements and the reason for no production.

Downloaded from http://www.everyspec.com

TABLE III. Qualification inspection.

Inspection	Requirement paragraph	Test method paragraph
Group I (all samples)		
Screened in accordance with table I (for screened attenuators only)	3.5.1	4.7.2
Visual and mechanical examination 1/	3.1, 3.3, 3.4, 3.6, 3.8	4.7.1
Coaxial connector wear resistance: 2/	3.5.2	4.7.3
VSWR	3.5.3	4.7.4
Attenuation	3.5.4	4.7.5
Group II - 2 sample units		
Stability of attenuation	3.5.10	4.7.11
With temperature change		
After thermal shock		
After vibration		
After shock		
After moisture resistance		
After salt spray		
After peak power		
Sensitivity of attenuation	3.5.11	4.7.12
After change in frequency		
After change in input power		
After change in temperature		
Resistance to solvents	3.5.9	4.7.10
Visual and mechanical examination	3.1, 3.3, 3.4, 3.6, 3.8	4.7.1
Group III - 2 sample units		
Electromagnetic interference/ RF leakage 5/	3.5.5	4.7.6
Coaxial connector repeatability:	3.5.6	4.7.7
Attenuation 2/	3.5.4	4.7.5
Solderability 3/	3.5.7	4.7.8
Terminal strength/lead integrity 4/	3.5.8	4.7.9
Resistance to solvents	3.5.9	4.7.10
Life: 760 hours	3.5.12	4.7.13
Endpoints:		
Force to engage/disengage	3.5.13	4.7.14
Coupling proof torque	3.5.14	4.7.15
Attenuation	3.5.4	4.7.5
Visual and mechanical examination	3.1, 3.3, 3.4, 3.6, 3.8	4.7.1

1/ For non-screened attenuators only.
2/ Coaxial types of attenuator.
3/ Attenuators with solderable leads or terminal.
4/ Attenuators with leads or terminal.
5/ Coaxial and waveguide types of attenuator.

Downloaded from http://www.everyspec.com

4.6 Conformance inspection.

4.6.1 General. Conformance inspection shall consist of group A inspection, screening (when applicable), and group B inspection. Group B inspection shall be performed under periodic inspection. Appendix C establishes requirements for conformance inspection of radio and microwave frequency surface mount chip attenuators for use in established reliability electronic applications.

4.6.1.1 Inspection lot. An inspection lot shall consist of all attenuators with the same PIN produced under essentially the same conditions, and offered for inspection at one time.

4.6.1.2 Screening. Screening shall consist of the examination and tests specified in table I in the order shown. Attenuators shall pass screening before being subjected to group A inspection.

4.6.1.3 Group A inspection. Group A inspection shall consist of the examination and tests specified in table IV, in the order shown.

TABLE IV. Group A inspection. 1/

Inspection	Requirement paragraph	Test method paragraph
Visual and mechanical examination	3.1, 3.3, 3.4, 3.6, and 3.8	4.7.1
VSWR	3.5.3	4.7.4
Attenuation	3.5.4	4.7.5
Stability of attenuation: After peak power	3.5.10	4.7.11.7

1/ Post burn-in (screening) and group A VSWR and attenuation measurements may be performed concurrently.

4.6.1.4 Hundred-percent inspection. All screened attenuators shall be subjected to screening and group A inspection. All non-screened attenuators shall be subjected to group A inspection. Defective units shall be individually rejected.

4.6.1.5 Rejected items. If an inspection item is rejected, the contractor may rework it to correct the defect and resubmit for re-inspection. Such items shall be separate from new items and shall be clearly identified as re-inspected items. Even if rejected items are reworked and resubmitted, no more than one failure in visual/mechanical examination and no more than one subsequent failure in electrical inspections (VSWR or attenuation) shall be permitted. When more failures occur, they shall be reported to the qualifying activity (DSCC-VQE) as indication of process problems and potential threat to product reliability. Subsequent rejections for the same test parameter shall be cause for rejection of the entire lot.

4.6.1.6 Test data. Data shall be taken and recorded only for screened devices and sent to the acquiring activity only when it is specified in the acquisition document (see 6.2). Manner of performing measurements and data sheets shall be included and shipped in the same container as the attenuator. No classified information shall appear on data sheet.

Downloaded from http://www.everyspec.com

4.6.2 Periodic inspection. Periodic inspection shall consist of group B inspection. Except where the results of these inspections show noncompliance with applicable requirements (see 4.6.2.5), delivery of products which have passed screening and group A inspections (screened items only) or group A inspection (non-screened items only) shall not be delayed pending results of these periodic inspections.

4.6.2.1 Group B inspection. Group B inspection shall consist of the inspections, specified in table V, in the order shown. As depicted in table V, samples shall be tested at temperature extremes (see 3.1) in accordance with requirements for stability of attenuation with temperature change or sensitivity of attenuation after change in temperature (see table V). Temperature extreme tests' inclusion in table V represent each sample's requirement to endure temperature extreme testing. The four sample units shall be divided into two groups of two units each. The units shall then be subjected only to the inspections indicated for their particular group. Group B inspection shall be made on sample units selected from inspection lots which have passed the group A inspection.

4.6.2.2 Sampling plan. Four sample units (see 4.5.2) shall be selected every 24 months. The first inspection shall be 24-months after the date of notification of qualification.

4.6.2.3 Failures. If one or more sample units fail to pass group B inspection, the sample shall be considered to have failed.

4.6.2.4 Disposition of sample units. Sample units which have been subjected to group B inspection shall not be delivered on contract.

4.6.2.5 Noncompliance. If a sample fails to pass group B inspection, the manufacturer shall notify the qualifying activity and cognizant inspection activity of such failure and shall take corrective action on the material or processes, or both, as warranted, and on all units of product which can be corrected and which were manufactured under essentially the same conditions, with essentially the same materials and processes, and which are considered subject to the same failure. Acceptance and shipment of the product shall be discontinued until corrective action, acceptable to the Government, has been taken. After the corrective action has been taken, group B inspection shall be repeated on additional sample units (all inspections, or the inspection which the original sample failed) at the option of the qualifying activity (see 6.3). Group A inspection may be reinstituted; however, final acceptance shall be withheld until the group B inspection has shown that corrective action was successful. In the event of failure after inspection, information concerning the failure and the corrective action taken shall be furnished to the cognizant inspection activity and to the qualifying activity (see 6.3).

Downloaded from http://www.everyspec.com

TABLE V. Group B inspection.

Inspection	Requirement paragraph	Test method paragraph
Group I - 2 sample units		
Stability of attenuation	3.5.10	4.7.11
With temperature change		
After thermal shock		
After vibration		
After shock		
After moisture resistance		
After salt spray		
After peak power		
Sensitivity of attenuation	3.5.11	4.7.12
After change in frequency		
After change in input power		
After change in temperature		
Resistance to solvents	3.5.9	4.7.10
Visual and mechanical examination	3.1, 3.3, 3.4, 3.6, 3.8	4.7.1
Group II - 2 sample units		
Sensitivity of attenuation		
After change in temperature	3.5.11	4.7.12
Coaxial connector wear resistance: 1/	3.5.2	4.7.3
VSWR	3.5.3	4.7.4
Attenuation	3.5.4	4.7.5
Coaxial connector repeatability: 1/	3.5.6	4.7.7
Attenuation	3.5.4	4.7.5
Solderability 2/	3.5.7	4.7.8
Group II - 2 sample units (Continued)		
Terminal strength/lead integrity 3/	3.5.8	4.7.9
Resistance to solvents	3.5.9	4.7.10
Electromagnetic interference/RF leakage 4/	3.5.5	4.7.6
Life: 760 hours	3.5.12	4.7.13
Endpoints:		
Force to engage/disengage	3.5.13	4.7.14
Coupling proof torque	3.5.14	4.7.15
Attenuation	3.5.4	4.7.5
Visual and mechanical examination	3.1, 3.3, 3.4, 3.6, 3.8	4.7.1

1/ Coaxial types of attenuators.
2/ Attenuators with solderable leads or terminals.
3/ Attenuators with leads or terminals.
4/ Coaxial and waveguide type of attenuators.

Downloaded from http://www.everyspec.com

4.7 Methods of examination and test.

4.7.1 Visual and mechanical examination (see 3.1, 3.3, 3.4, 3.6, and 3.8). Attenuators shall be examined to verify that the design, construction, physical dimensions, marking, and workmanship are in accordance with the applicable requirements.

4.7.2 Screening (see 3.5.1). Attenuators shall be screened as specified in 4.7.2.1 through 4.7.2.6.

4.7.2.1 Thermal shock (see 3.5.1.1). With the connections uncovered, attenuators shall be tested in accordance with method 107 of MIL-STD-202. The following details and exceptions shall apply:

a. Mounting: When applicable, attenuators may be mounted on a heat sink.

b. Test condition: B, except temperature extremes shall be those specified (see 3.1) and number of cycles shall be ten (10). Place attenuators in the cold chamber for one-half hour. Attenuators shall be so positioned that they are exposed to freely circulating chamber air. Remove attenuators from the cold chamber and place in the hot chamber for one-half hour. Transfer shall take place within five (5) minutes of removal from the cold chamber, one cycle consisting of room temperature to cold, to room temperature to hot, and back to room temperature.

4.7.2.2 Conditioning (see 3.5.1.2). Attenuators shall be conditioned as specified in 4.7.2.2.1 and 4.7.2.2.2.

4.7.2.2.1 Lossy attenuator element conditioning. Subject attenuators to a temperature of 100°C ± 5°C for a period of 48 hours minimum.

4.7.2.2.2 Resistive film attenuator conditioning. Each end (input or output) of the attenuator shall be subjected to a direct current power level equal to the derated average power specified (see 3.1) at a temperature of +75°C ± 5°C for a period of 48 hours minimum (for a total of 96 hours minimum). (Direct current power level is equal to the applied voltage times current). During the conditioning test, the attenuator shall be terminated in a resistive load equal to the nominal impedance (see 3.4.2) specified in the specification sheet (see 3.1).

4.7.2.3 Pre-burn-in electrical (see 3.5.1.3). Before the burn-in is performed, the parameters listed in table I as pre-burn-in shall be measured at 25°C ± 5°C and the data recorded for all attenuators. Method of measurements shall be as specified in 4.7.2.3.1 through 4.7.2.3.3.

4.7.2.3.1 DC resistance. The DC resistance center conductor to center conductor and center conductor to case or ground (as applicable) for each side shall be measured using equipment capable of measuring one hundredth of an ohm.

4.7.2.3.2 VSWR. The VSWR shall be measured as specified in 4.7.4 at a low power level.

4.7.2.3.3 Attenuation. The attenuation (insertion loss) between ends shall be measured as specified in 4.7.5, with the exception that the signal source frequency shall be 50 MHz minimum.

Downloaded from http://www.everyspec.com

4.7.2.4 Burn-in (see 3.5.1.4). Attenuators shall be burn-in tested for a minimum 120 hours for each end (for a total of 240 hours minimum) under the following conditions:

a. Temperature = 75°C ± 5°C.

b. Load = 50 ± 2 or 72 ± 2 ohms (for coaxial and stripline attenuators)
= Nominal load (for waveguide attenuators).

c. DC power input equals derated power according to the appropriate specification sheet at 75°C, into one end for 120 hours minimum; apply this same power to the other end for the next 120 hours minimum.

4.7.2.5 Post burn-in electrical (see 3.5.1.5). After the burn-in, the same parameters specified in 4.7.2.3 shall be re-measured and the parametric change (delta) shall be determined. Attenuators that exceed one or more of the following delta limits shall be considered to have failed.

a. DC resistance - - - - - - ± 2 percent or 0.25 ohms, whichever is greater.

b. VSWR - - - - - - - - - - - ± 0.1.

c. Attenuation - - - - - - - - ± 0.1 dB for 0 to 4 dB range.
± 0.1 dB for attenuators in the 4.5 dB to 9 dB range.
± 0.2 dB for 9.5 dB and higher value attenuators.

4.7.2.6 Radiographic (see 3.5.1.6). Attenuators shall be examined in accordance with method 209 of MIL-STD-202, the following details shall apply:

a. A three-dimensional image quality indicator, constructed of, and containing materials which are compatible with the attenuators being x-rayed, shall be available for simultaneous exposure with the attenuator. The image quality indicator shall utilize slots, wires, and particles of sizes down to and including major dimensions equal to or less than .001 inch.

b. Two views shall be required, at 90° to each other, and both perpendicular to the major (long) axis of the attenuator.

c. The radiographs shall be examined under variable lighting conditions and magnification of 1X to 7X for the defects specified in MIL-STD-202, method 209.

d. Any x-ray rejects must be removed from the lot and disposed of, in accordance with 4.6.1.4 and 4.6.1.5.

e. Serialization of attenuators is required and must be correlated to the film views. One film copy is required to be shipped with the attenuators. The manufacturer is not required to retain film copies. One copy of a report is required for each lot shipped indicating the number of attenuators radiographically inspected, the number found acceptable, and the number rejected.

4.7.3 Coaxial connector wear resistance (see 3.5.2). The connectors shall be subjected to 500 cycles of connection and disconnection. A cycle shall consist of a firm connection made to both connectors of the attenuator with the coupling means tightened to normal tightness and the connector then completely disconnected and removed from the circuit.

Downloaded from http://www.everyspec.com

4.7.4 VSWR (at either end) (see 3.5.3). The VSWR of attenuators shall be measured at each end and at the specified frequency (see 3.1).

4.7.4.1 Procedure. VSWR of attenuators shall be measured using a system such as shown on figure 1 or equivalent. Tuners and pads shall be used, when necessary, to reduce residual VSWR of the system to a level that will assure accurate results before connecting the assembly under test. The overall accuracy of VSWR measurements shall be such that the absolute VSWR = (measured VSWR) +0.08 (maximum specified VSWR). VSWR (S11, S22) may be measured simultaneously with attenuation (S21), using an automatic network analyzer. Multiple, accurate data points over the entire frequency range can be obtained with specified accuracy (see 3.1). Unless otherwise specified in the specification sheet, test requirements shall be made by sweeping the network/spectrum analyzer (in steps) over that portion of the attenuator's operating frequency range falling between 10 MHz and 26 GHz (see 3.1) or falling within the complete frequency range of the analyzer.

4.7.5 Attenuation (see 3.5.4). The attenuation of attenuators shall be measured. An automatic network analyzer may be used. The attenuation (S21) and VSWR (S11, S22) can be measured simultaneously with multiple, accurate data points over the entire frequency range, with the accuracy therein specified over the frequency range specified (see 3.1). Unless otherwise specified in the specification sheet, test requirements shall be made by sweeping the network/spectrum analyzer (in steps) over that portion of the attenuator's operating frequency range falling between 10 MHz and 26 GHz (see 3.1) or falling within the complete frequency range of the analyzer.

4.7.6 Electromagnetic interference (when specified) (see 3.1) (RF leakage) (see 3.5.5). The swept frequency measurement shall be made covering the total frequency range in steps not exceeding an octave band (the appropriate stub antenna shall be tuned to a quarter wave at mid-octave).

a. Place a fixed amount of RF power in a transmission line in series with a variable attenuator and spectrum analyzer.

b. Place specified value of attenuation (see 3.1) in the line and note the difference in readings on the spectrum analyzer.

c. Reset the attenuator to zero and place a $\lambda/4$ (at mid-band) at one end of the flexible coaxial cable and connected to the spectrum analyzer.

d. Place the test attenuator in a transmission line properly terminated and "SNIFF" the part with the $\lambda/4$ stub. The $\lambda/4$ stub shall come as close to the part as possible without touching. Particular attention shall be given to connectors, fastening devices, and flange interfaces.

e. Any attenuation in excess of the value specified in 4.7.6b shall be cause for rejecting the part.

4.7.7 Connector repeatability (see 3.5.6). Attenuators shall be tested for connector repeatability using a network analyzer, a system as shown in figure 2, or equivalent. The following details shall apply:

a. Test at specified test frequencies or at three frequencies, one from each third of the rated frequency range.

b. Perform 10 complete connects and disconnects, both ends separately.

c. Rotate attenuator through a full 360° with each mating at approximately 36° increments.

Downloaded from http://www.everyspec.com

d. Cleaning of connectors or reshaping of contacts is not permitted during test sequence.

e. Side thrust shall not be permitted during test.

4.7.8 Solderability (see 3.5.7). The terminals of the attenuator shall be tested in accordance with method 208 of MIL-STD-202.

4.7.9 Terminal strength/lead integrity (see 3.5.8). Attenuators shall be tested as specified in 4.7.9.1 or 4.7.9.2.

4.7.9.1 Terminal strength. Attenuators with terminals shall be tested in accordance with method 211 of MIL-STD-202, test condition A, applied force 1.5 pounds.

4.7.9.2 Lead integrity. Attenuators with leads shall be tested in accordance with method 211 of MIL-STD-202, test condition C. The applied force shall be 8 ± 0.5 ounces. For leads with a section modulus equal to or less than that of a lead with a cross-section of 0.006 X 0.20, the force shall be 3 ± 0.3 ounces.

4.7.10 Resistance to solvents (see 3.5.9). Attenuators shall be tested in accordance with method 215 of MIL-STD-202. All portions of the attenuator shall be brushed.

4.7.11 Stability of attenuation (see 3.5.10). Attenuators shall be subjected to the tests as specified in 4.7.11.1 to 4.7.11.7 inclusive. At the conclusion of each of these tests, the attenuators shall be examined for evidence of mechanical damage.

4.7.11.1 With temperature change. The change in attenuation with temperature change shall be determined by measuring the attenuation of the attenuators (see 4.7.5 and figure 5) at 23°C ± 2°C with a maximum power input of 10 milliwatts (mW), and at both extremes of the operating temperature range specified (see 3.1). Source and load impedance as seen from the junction of both thermal isolators shall be reflection-less. When the dB is greater than 0.1 dB from reference to the extreme operating temperature, figure 5 is a recommended test setup.

4.7.11.2 After thermal shock. Attenuators shall be tested in accordance with method 107 of MIL-STD-202. The following details shall apply:

a. Test condition: B, -65°C to +100°C.

b. Measurements before and after thermal shock: Attenuation shall be measured (see 4.7.5 and figure 6), at the inspection conditions specified in 4.4, with minimum input power and at full-rated input power (see 3.1).

4.7.11.3 After vibration. Attenuators shall be tested in accordance with method 204 of MIL-STD-202. The following details and exceptions shall apply:

a. Test condition: D, unless otherwise specified (see 3.1).

b. Method of mounting: Attenuators shall be attached to the vibration table by clamps. Unless otherwise specified, a clamp shall be placed around the center of each attenuator, and no part of the attenuator shall touch any object other than the clamp.

Downloaded from http://www.everyspec.com

c. Duration of vibration: One hour in each of three mutually perpendicular directions (total 3 hours).

d. Measurements after vibration: Attenuation shall be measured as specified in 4.7.5.

4.7.11.4 After shock. Attenuators shall be tested in accordance with method 213 of MIL-STD-202. The following details shall apply:

a. Test condition: I, unless otherwise specified (see 3.1).

b. Measurement after shock: Attenuation shall be measured as specified in 4.7.5.

4.7.11.5 After moisture resistance. Attenuators shall be tested in accordance with method 106 of MIL-STD-202. The following details and exceptions shall apply:

a. Initial measurements: Not applicable.

b. Polarization and load: Not applicable.

c. Sub-cycle step 7b: Not applicable.

d. Final measurement: Attenuation shall be measured as specified in 4.7.5. MIL-STD-202 method 106 requirements for final measurements “after drying period” shall apply (see table VI).

TABLE VI. Accuracy for attenuation measurements.

Attenuation value, dB	Attenuator	Figure	Accuracy of attenuation measurements
Up to 50, incl.	Attenuators for use in general field equipment (specification sheets MIL-DTL-3933/10, /18 and /19).	3	Up to 10 dB, incl. - 0.2 dB Over 10 to 50 dB, incl. - 0.2 dB/10 dB
Up to 50, incl.	Attenuators for use in equipment in which precision and stability are secondary considerations (specification sheets MIL-DTL-3933/14, /16, /17 and /25).	4	Up to 10 dB, incl. - 0.5 dB Over 10 to 50 dB, Incl. - 0.5 dB/10 dB

Downloaded from http://www.everyspec.com

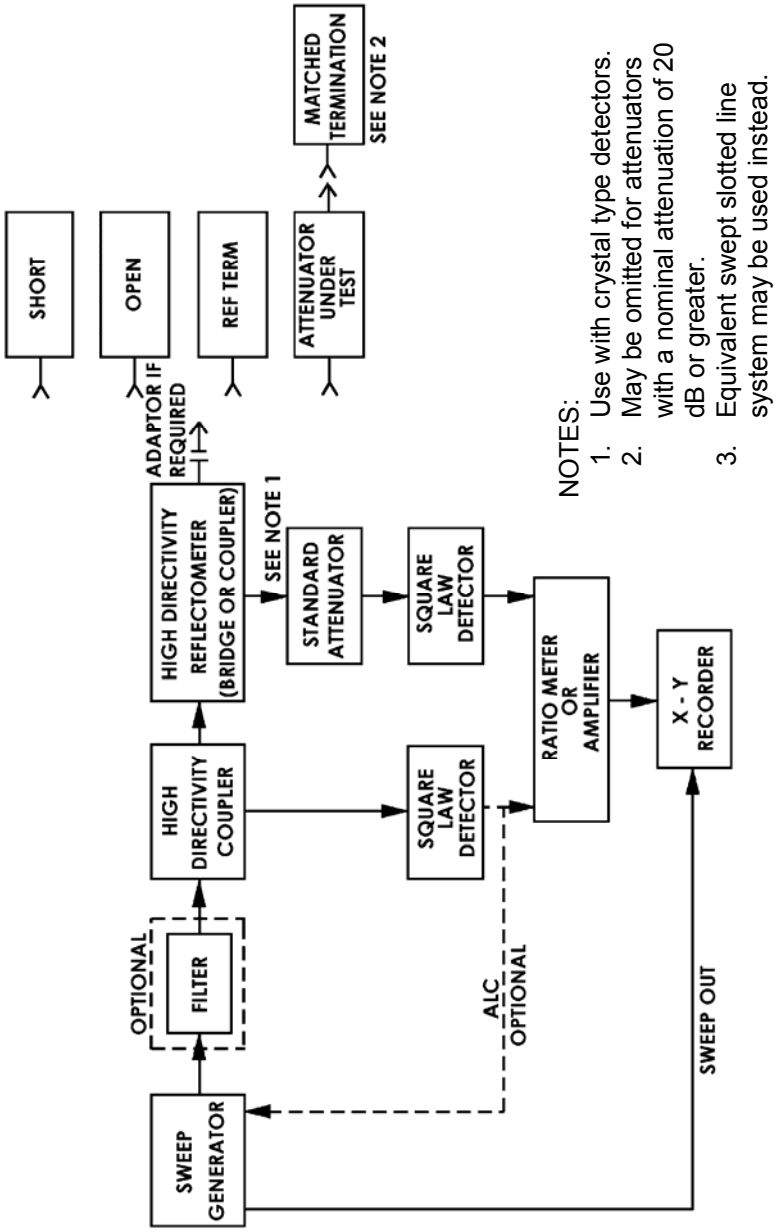

NOTES:
1. Use with crystal type detectors.
2. May be omitted for attenuators with a nominal attenuation of 20 dB or greater.
3. Equivalent swept slotted line system may be used instead.

FIGURE 1. VSWR test setup (or equivalent).

Downloaded from http://www.everyspec.com

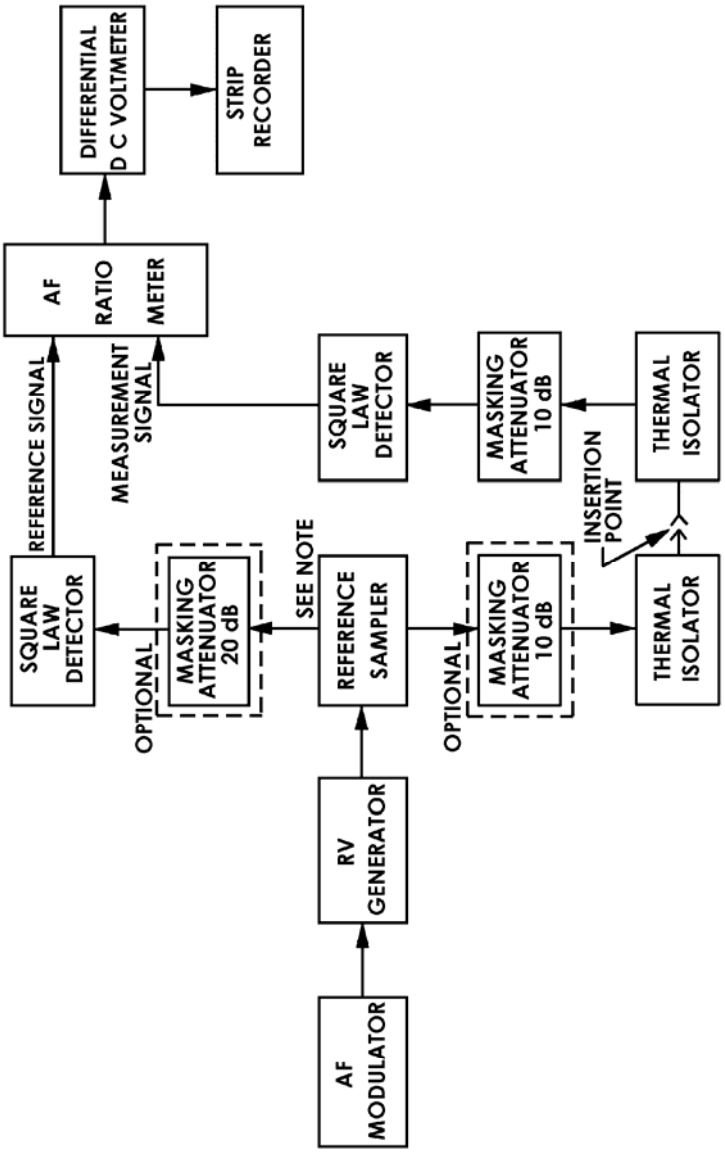

NOTE: High directivity coupler or matched signal splitter.

FIGURE 2. Test setup for connector repeatability (or equivalent).

Downloaded from http://www.everyspec.com

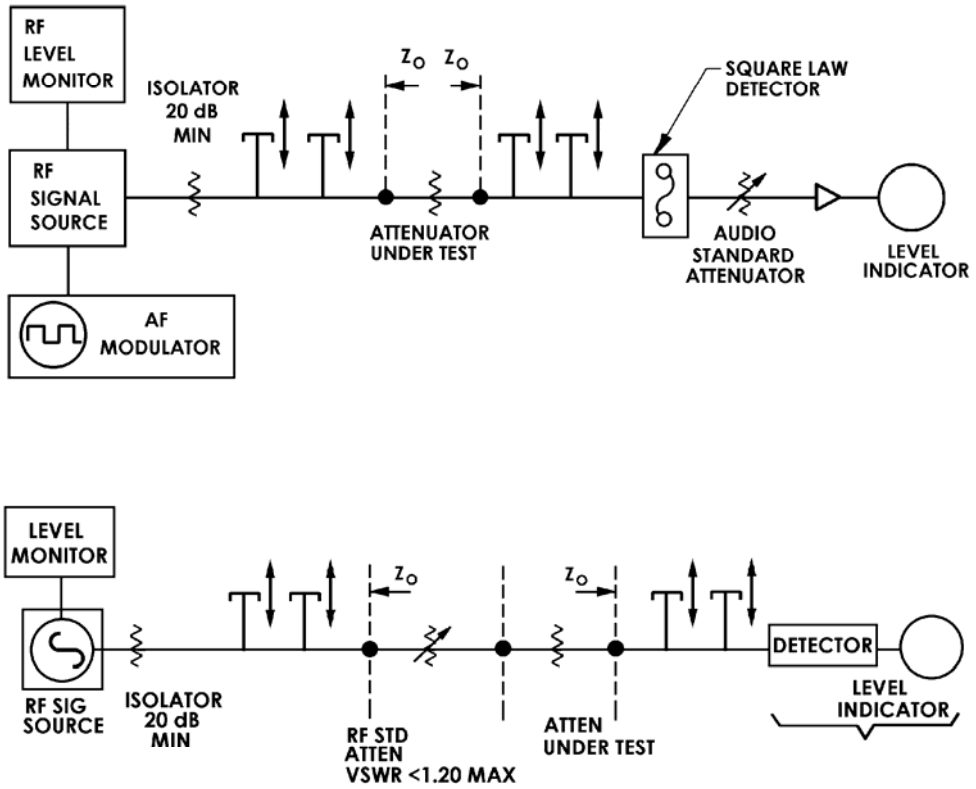

FIGURE 3. Test setup for attenuation measurements for attenuators up to 50 dB, incl., by RF-substitution method, or equivalent.

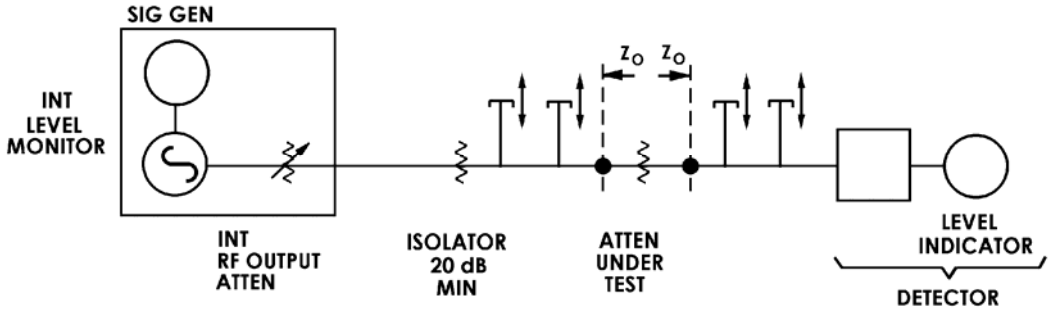

FIGURE 4. Test setup for attenuation measurements for attenuators up to 50 dB, inclusive, by signal-generator method, or equivalent.

Downloaded from http://www.everyspec.com

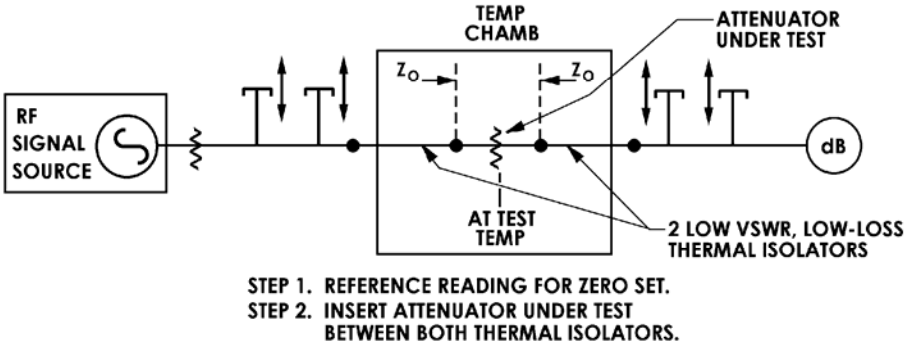

FIGURE 5. Modification of test setup for attenuation measurement at extreme temperature, or equivalent.

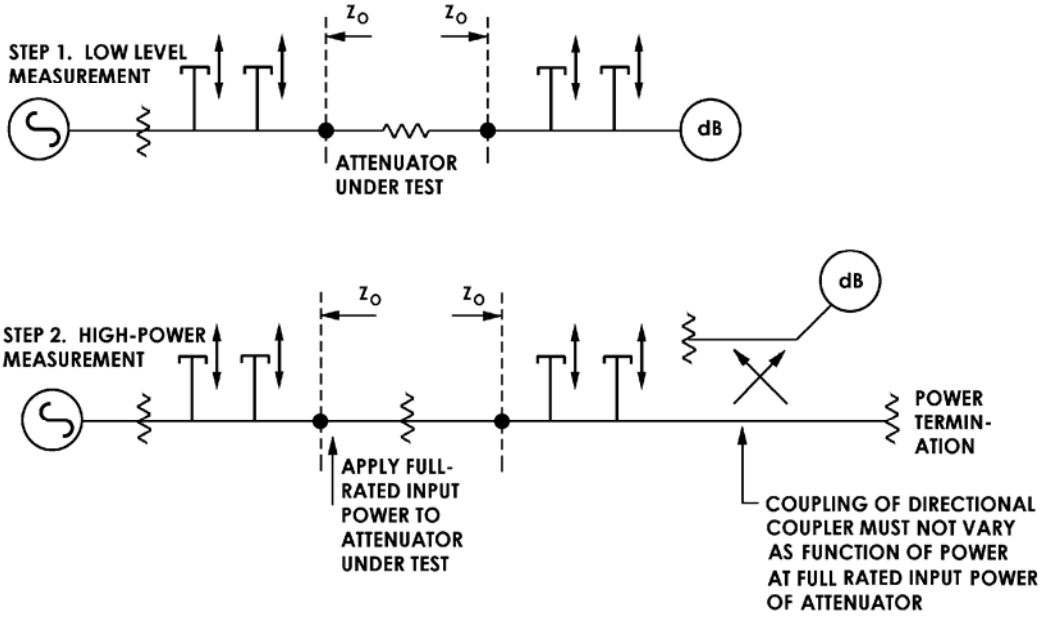

FIGURE 6. Modification of test setup for attenuation measurement at high power, or equivalent.

Downloaded from http://www.everyspec.com

4.7.11.6 After salt spray. Attenuators shall be tested in accordance with method 101 of MIL-STD-202. The following details shall apply:

a. Special detail: During the test, connectors shall be mated to capped dummy connectors.

b. Test condition: B.

c. Examinations after exposure: Attenuators shall be examined for evidence of corrosion or pitting.

d. Measurements after salt spray: Attenuation shall be measured as specified in 4.7.5 after the attenuator has been cleaned of any salt accumulation.

4.7.11.7 After peak power. Attenuators shall be supported in still air and free space at the standard inspection conditions specified in 4.4. The specified peak power shall be applied for 1.00 ± .01 hour at each end (see 3.1). After the attenuator has cooled to standard inspection conditions (see 4.4), attenuation shall be measured as specified in 4.7.5.

4.7.12 Sensitivity of attenuation (see 3.5.11). Sensitivity of attenuation of attenuators shall be determined by measuring attenuation as specified in 4.7.5 at each extreme of the frequency range (see 3.1), at full input power (see 3.1) and any reference power, and at each extreme of the temperature range (see 3.1). Sensitivity of attenuation shall be computed in accordance with the following formulas:

$$\text{Frequency sensitivity} = \frac{\Delta dB}{dB}\,\frac{1}{\Delta f}$$

$$\text{Power sensitivity} = \frac{\Delta dB}{dB}\,\frac{1}{\Delta p}$$

$$\text{Temperature sensitivity} = \frac{\Delta dB}{dB}\,\frac{1}{\Delta t}$$

$$= \frac{\Delta dB}{\Delta t} \text{ for secondary standard over 20 dB}$$

Where:

ΔdB = Change in attenuation at either extreme of the operating frequency, at full input power, or at either extreme of the operating temperature (see 3.1).

dB = Attenuation at reference frequency, reference power, or reference temperature.

Δf = Change in frequency from reference to extreme, in GHz.

Δp = Change in power from reference to full input, in watts.

Δt = Change in temperature from reference to extreme, in °C.

4.7.13 Life (see 3.5.12). Attenuators shall be tested in the same manner as specified in 4.7.2.4 and 4.7.2.5, except the time shall be 380 hours for each end (for a total of 760 hours).

Downloaded from http://www.everyspec.com

4.7.14 Force to engage/disengage (see 3.5.13). Attenuator connectors shall pass the force to engage/disengage requirements of MIL-PRF-39012.

4.7.15 Coupling proof torque (see 3.5.14). Attenuator connectors shall pass the coupling proof torque requirements of MIL-PRF-39012.

5. PACKAGING

5.1 Packaging. For acquisition purposes, the packaging requirements shall be as specified in the contract or order (see 6.2). When packaging of materiel is to be performed by DoD or in-house contractor personnel, these personnel need to contact the responsible packaging activity to ascertain packaging requirements. Packaging requirements are maintained by the Inventory Control Point's packaging activities within the Military Service or Defense Agency, or within the military service's system commands. Packaging data retrieval is available from the managing Military Department's or Defense Agency's automated packaging files, CD-ROM products, or by contacting the responsible packaging activity.

6. NOTES

(This section contains information of a general or explanatory nature that may be helpful, but is not mandatory.)

6.1 Intended use. Attenuators covered by this specification are intended for use in the radio and microwave frequency region (see 1.1).

6.1.1 Derating guidelines. Unless otherwise specified in the specification sheet (see 3.1), design applications should derate RF input power by 1.5 dB (in dB_m) or x 0.70 (in watts).

6.2 Acquisition requirements. For attenuators covered by specification sheets (see 3.1). Acquisition documents should specify the following:

a. Title, number, and date of the specification.

b. Title, number, and date of the applicable specification sheet (see 3.1 and 1.4).

c. Packaging requirements (see 5.1).

d. If special or additional identification marking is required.

e. Magnesium alloy, only when specified (see 3.1).

f. PIN (see 1.4).

g. Data delivery requirements (see 4.6.1.6).

h. Class of attenuator specified (see 1.2 and appendix B).

Downloaded from http://www.everyspec.com

6.3 Qualification. With respect to products requiring qualification, awards will be made only for products which are, at the time of award of contract, qualified for inclusion in Qualified Products List 3933 whether or not such products have actually been so listed by that date. The attention of the contractors is called to these requirements, and manufacturers are urged to arrange to have the products that they propose to offer to the Federal Government tested for qualification in order that they may be eligible to be awarded contracts or orders for the products covered by this specification. Information pertaining to qualification of products may be obtained from Defense Supply Center Columbus, Code DSCC-VQE, P.O. Box 3990, Columbus, OH 43218-3990 (mail to: vqe.chief@dla.mil).

6.3.1 Provisions governing qualification. Copies of "Provisions Governing Qualification" SD-6 may be obtained upon application to Defense Automation and Production Service, Building 4D (DPM-DODSSP), 700 Robbins Avenue, Philadelphia, PA 19111-5094.

6.4 Subject term (keyword) listing.

Connectors	Lossy	Sensitivity
Electrical	Microwave	Stability
Flange	Qualification	VSWR
Interference, electromagnetic	Radio	Waveguide
Leads	Screening	

6.5 Corrosion resistant steel bars, wire, shapes and forgings. Experience has shown that requirements for corrosion resistant steel are satisfied by material conforming with SAE-AMS-QQ-S-763, "Steel Bars, Wire, Shapes, and Forgings; Corrosion Resistant" (inactive).

6.6 Environmentally preferable material. Environmentally preferable materials should be used to the maximum extent possible to meet the requirements of this specification. As of the dating of this document, the U.S. Environmental Protection Agency (EPA) is focusing efforts on reducing 31 priority chemicals. The list of chemicals is available on their website at http://www.epa.gov/epaoswer/hazwaste/minimize/chemlist.htm. Further information is available at the following EPA site: http://www.epa.gov/epaoswer/hazwaste/minimize/. Included in the EPA list of 31 priority chemicals are cadmium, lead, and mercury. Use of the materials on the list should be minimized or eliminated unless needed to meet the requirements specified herein (see Section 3).

NOTE: In this specification, the use of cadmium and fluorocarbon compounds is forbidden.

6.7 Tin whisker growth. The use of alloys with tin content greater than 97 percent, by mass, may exhibit tin whisker growth problems after manufacture. Tin whiskers may occur anytime from a day to years after manufacture and can develop under typical operating conditions, on products that use such materials. Conformal coatings applied over top of a whisker-prone surface will not prevent the formation of tin whiskers. Alloys of 3 percent lead, by mass, have shown to inhibit the growth of tin whiskers (see 3.3.7). For additional information on this matter, refer to ASTM-B545 (Standard Specification for Electrodeposited Coatings of Tin).

6.8 Amendment notations. The margins of this specification are marked with vertical lines to indicate modifications generated by this amendment. This was done as a convenience only and the Government assumes no liability whatsoever for any inaccuracies in these notations. Bidders and contractors are cautioned to evaluate the requirements of this document based on the entire content irrespective of the marginal notations.

Downloaded from http://www.everyspec.com

APPENDIX A

GROUP QUALIFICATION BY CHARACTERISTICS

A.1. SCOPE

A.1.1 Scope. Previous revisions of this specification appendix employed a "group qualification" approach that identified for all attenuator types, the entirety of ways in which each attenuator type could be qualified by previous qualification of other attenuators with more rigorous requirements characteristics. A simplified approach is adopted herein to enable the same matrix of group qualification possibilities, without reiterating the entire list of attenuator characteristics combinations available to accomplish group qualification. This appendix is a mandatory part of the specification. The information contained herein is intended for compliance.

A.2. APPLICABLE DOCUMENTS (This is not applicable to this appendix.)

A.3. REQUIREMENTS

A.3.1 Group qualification. Group qualification is herein interpreted as "characteristic qualification". Attenuators with subordinate characteristics, that have all been qualified by previous qualification of the same or more rigorous dominant characteristics in earlier qualified attenuators, are considered qualified, with no additional testing. Group qualification by characteristics requires previous qualification of dominant characteristics covering each subordinate characteristic listed in table A-I. Qualification requires qualifying an attenuator characteristic listed under each characteristic category for an attenuator type. Acceptance of group qualification by characteristics is at the discretion of the qualifying activity: Defense Supply Center Columbus, Code DSCC-VQE, P.O. Box 3990, Columbus, OH 43218-3990 (mail to: vqe.chief@dla.mil).

A.3.2 List of dominant attenuator qualification characteristics. The list of dominant attenuator qualification characteristics, listed by attenuator type, and associated lists of subordinate attenuator characteristics intended for group qualification by characteristics, is as follows:

TABLE A-I. Characteristics for group qualification.

Attenuator type	Waveguide	
Characteristic category	Previous qualifying attenuator characteristic (dominant)	Attenuator characteristics (subordinate) qualified by group qualification
Screening	Screened Non-screened	Screened or non-screened Non-screened
Frequency range (GHz)	18-26.5 220-325	18-26.5 to 2.60-3.95 220-325 to 22-33
Average power	Low Low High Standard	Low to high 1/ Low to medium 2/ High and standard Standard
Attenuation	20 dB and 1 dB 40 dB 60 dB	20 dB to 0 dB 40 dB to 21 dB 60 dB to 41 dB

See footnotes at end of table.

Downloaded from http://www.everyspec.com

APPENDIX A

TABLE A-I. Characteristics for group qualification - Continued.

Attenuator type	Coaxial	
Characteristic category	Previous qualifying attenuator characteristic (dominant) values	Attenuator characteristics (subordinate) qualified by group qualification
Screening	Screened Non-screened	Screened or non-screened Non-screened
Frequency range (GHz)	DC-46 DC-26.5 DC-18 DC-12	DC-46, DC-26.5, DC-18, DC-12, DC-8, DC-2 DC-26.5, DC-18 DC-12, DC-8, DC-2 DC-18, DC-12, DC-8, DC-2 DC-12, DC-8, DC-2
Average power	Low Medium High	Low Medium High
Attenuation	20 dB and 1 dB 40 dB 60 dB	20 dB to 0 dB 40 dB to 21 dB 60 dB to 41 dB
Attenuator type	Stripline, terminal, or lead	
Characteristic category	Previous qualifying attenuator characteristic (dominant)	Attenuator characteristics (subordinate) qualified by group qualification
Screening	Screened Non-screened	Screened or non-screened Non-screened
Frequency range (GHz)	DC-12 DC-8 DC-4 DC-1	DC-12, DC-8, DC-4, DC-1 DC-8, DC-4, DC-1 DC-4, DC-1 DC-1
Average power	Low Medium	Low Medium
Attenuation	20 dB and 1 dB	20 dB to 1 dB

1/ For frequency range 18-26.5 GHz.
2/ For frequency range 220-325 GHz.

Downloaded from http://www.everyspec.com

APPENDIX B

BOILERPLATE TABLES DEFINING ATTENUATOR CLASSES

(QUALITY LEVELS FOR USE IN SPECIFICATION SHEETS)

B.1. SCOPE

B.1.1 Scope. Appendix B includes separate boiler plate tables for definition of attenuator class (see 1.2). These tables are to be used as guidelines in specification sheets. Classification system categorizes attenuators having the same functional use but different requirements for quality. Tables below define attenuator tolerances to be used in each specification sheet for each classification (such as quality level) that users desire. Ideally, a specification sheet could have as many classifications as the market desires; therefore, the classification must be marked (see 3.6) on the attenuator to distinguish it from other quality levels. This appendix is a mandatory part of the specification. The information contained herein is intended for compliance.

B.2. APPLICABLE DOCUMENTS (This is not applicable to this appendix.)

B.3. REQUIREMENTS

B.3.1 Tables defining attenuator classes in specification sheets. If a user wishes an attenuator for fit and function, but is dissatisfied with the quality level and wishes to order a tighter or looser attenuator tolerance, then add the new class tolerance to the specification sheet. This way all classes of attenuators are available for all specification sheets. When higher sensitivity and stability are desired, simply order a class II instead of a class III or a class IV.

Downloaded from http://www.everyspec.com

APPENDIX B

TABLE B-I. Class I attenuator quality levels.

Characteristic	Class I
VSWR (at either end, max) Waveguide to 18 GHz Waveguide over 18 GHz Others, F in GHz	 1.05 1.15 1.03+ 0.005F
Deviation of attenuation from that specified at reference frequency (basic test) (see 3.1), max: Up to 10 dB, inclusive Over 10 dB	 0.02 dB 0.002 dB/dB
Change in attenuation after temperature change or thermal shock, max: Up to 10 dB, inclusive Over 10 dB	 0.002 dB 0.0005 dB/dB
Change in attenuation after vibration or shock, max: Up to 10 dB, inclusive Over 10 dB	 0.02 dB 0.002 dB/dB
Change in attenuation after moisture resistance, max: Up to 10 dB, inclusive Over 10 dB	 0.02 dB 0.002 dB/dB
Change in attenuation after salt spray, max: Up to 10 dB, inclusive Over 10 dB	 0.02 dB 0.002 dB/dB
Change in attenuation after peak power, max: Up to 10 dB, inclusive Over 10 dB	 0.002 dB 0.0005 dB/dB
Frequency sensitivity, max:	0.005 dB/dB/GHz
Power sensitivity for full input power, max:	0 dB/dB/Watt
Temperature sensitivity of attenuation, max:	10^{-6} dB/dB/°C
Connector repeatability max: Variation in attenuation	 0.002 dB
Concentricity of coaxial connectors	2 percent of inner diameter of outer conductor or 3 mils, whichever is greater

Downloaded from http://www.everyspec.com

APPENDIX B

TABLE B-I. Class II attenuator quality levels - Continued.

Characteristic	Class II	
	A	B
VSWR (at either end, max) Waveguide to 18 GHz Waveguide over 18 GHz Others, F in GHz	 1.15 1.30 1.10+ 0.015F	
Deviation of attenuation from that specified at reference frequency (basic test) (see 3.1), max: Up to 10 dB, inclusive Over 10 dB	 0.1 dB 0.01 dB/dB	
Change in attenuation after temperature change or thermal shock, max: Up to 10 dB, inclusive Over 10 dB	 0.01 dB 0.001 dB/dB	
Change in attenuation after vibration or shock, max: Up to 10 dB, inclusive Over 10 dB	 0.05 dB 0.005dB/dB	
Change in attenuation after moisture resistance, max: Up to 10 dB, inclusive Over 10 dB	 0.1 dB 0.01 dB/dB	
Change in attenuation after salt spray, max: Up to 10 dB, inclusive Over 10 dB	 0.1 dB 0.01 dB/dB	
Change in attenuation after peak power, max: Up to 10 dB, inclusive Over 10 dB	 0.01 dB 0.01 dB/dB	
Frequency sensitivity, max:	0.02 dB/dB/GHz	
Power sensitivity for full input power, max:	0.001 dB/dB/Watt	
Temperature sensitivity of attenuation, max:	0.0001 dB/dB/°C	0.0007 dB/dB/°C
Connector repeatability max: variation in attenuation	 0.01 dB	
Concentricity of coaxial connectors	2 percent of inner diameter of outer conductor or 3 mils, whichever is greater	

Downloaded from http://www.everyspec.com

APPENDIX B

TABLE B-I. Class III attenuator quality levels - Continued.

Characteristic	Class III
VSWR (at either end, max) Waveguide to 18 GHz Waveguide over 18 GHz Others, F in GHz	 1.35 1.50 1.30+ 0.02F
Deviation of attenuation from that specified at reference frequency (basic test) (see 3.1), max: Up to 10 dB, inclusive Over 10 dB	 0.2 dB 0.02 dB/dB
Change in attenuation after temperature change or on thermal shock, max: Up to 10 dB, inclusive Over 10 dB	 0.05 dB 0.005 dB/dB
Change in attenuation after vibration or shock, max: Up to 10 dB, inclusive Over 10 dB	 0.1 dB 0.01 dB/dB
Change in attenuation after moisture resistance, max: Up to 10 dB, inclusive Over 10 dB	 0.2 dB 0.02 dB/dB
Change in attenuation after salt spray, max: Up to 10 dB, inclusive Over 10 dB	 0.2 dB 0.02 dB/dB
Change in attenuation after peak power, max: Up to 10 dB, inclusive Over 10 dB	 0.05 dB 0.005 dB/dB
Frequency sensitivity, max:	0.1 dB/dB/GHz
Power sensitivity for full input power, max:	0.005 dB/dB/Watt
Temperature sensitivity of attenuation, max:	0.0004 dB/dB/°C
Connector repeatability max: Variation in attenuation	 0.02 dB
Concentricity of coaxial connectors	4 percent or 5 mils

Downloaded from http://www.everyspec.com

APPENDIX B

TABLE B-I. Class IV attenuator quality levels - Continued.

Characteristic	Class IV
VSWR (at either end, max) Waveguide to 18 GHz Waveguide over 18 GHz Others, F in GHz	 1.50 1.75 1.50+ 0.03F
Deviation of attenuation from that specified at reference frequency (basic test) (see 3.1), max: Up to 10 dB, inclusive Over 10 dB	 0.5 dB 0.05 dB/dB
Change in attenuation after temperature change or thermal shock, max: Up to 10 dB, inclusive Over 10 dB	 0.5 dB 0.05 dB/dB
Change in attenuation after vibration or shock, max: Up to 10 dB, inclusive Over 10 dB	 0.5 dB 0.05 dB/dB
Change in attenuation after moisture resistance, max: Up to 10 dB, inclusive Over 10 dB	 0.5 dB 0.05 dB/dB
Change in attenuation after salt spray, max: Up to 10 dB, inclusive Over 10 dB	 0.5 dB 0.05 dB/dB
Change in attenuation after peak power, max: Up to 10 dB, inclusive Over 10 dB	 0.5 dB 0.05 dB/dB
Frequency sensitivity, max:	0.4 dB/dB/GHz
Power sensitivity for full input power, max:	0.005 dB/dB/Watt
Temperature sensitivity of attenuation, max:	0.0006 dB/dB/°C
Connector repeatability max: Variation in attenuation	 0.04 dB
Concentricity of coaxial connectors	4 percent or 5 mils

Downloaded from http://www.everyspec.com

APPENDIX C

SURFACE MOUNT CHIP ATTENUATORS
QUALIFICATION AND CONFORMANCE INSPECTION

C.1. SCOPE

C.1.1 Scope. The purpose of this appendix is to establish standards for qualification and conformance inspection of radio and microwave frequency surface mount chip attenuators for use in established reliability electronic applications. This appendix is a mandatory part of the specification. The information contained herein is intended for compliance.

C.1.2 Classification. Two quality levels of surface mount chip attenuators have been designated as class K, for use in space applications, and class H, for use in standard military applications.

C.2. APPLICABLE DOCUMENTS

C.2.1 General. The documents listed in this section are specified in sections C.3 or C.4 of this appendix. This section does not include documents cited in other sections of this appendix or recommended for additional information or as examples. While every effort has been made to ensure the completeness of this list, document users are cautioned that they must meet all specified requirements of documents cited in sections C.3 or C.4 of this appendix, whether or not they are listed.

C.2.2 Government documents.

C.2.2.1 Specifications, standards, and handbooks. The following specifications, standards, and handbooks form a part of this appendix to the extent specified herein. Unless otherwise specified, the issues of these documents are those cited in the solicitation or contract.

DEPARTMENT OF DEFENSE SPECIFICATIONS

MIL-DTL-3933/29	-	Attenuators, Fixed, Chip, (Surface Mount), 0-20 dB, Frequency Range: DC TO 18 GHz.

DEPARTMENT OF DEFENSE STANDARDS

MIL-STD-202	-	Electronic and Electrical Component Parts.
MIL-STD-883	-	Microcircuits.

(Copies of these documents are available online at http://assist.daps.dla.mil or from Standardization Document Order Desk, 700 Robbins Avenue, Building 4D, Philadelphia, PA 19111-5094.)

C.2.3 Non-Government publications. The following documents form a part of this appendix to the extent specified herein. Unless otherwise specified, the issues of these documents are those cited in the solicitation or contract.

ASTM INTERNATIONAL

ASTM-E595	-	Total Mass Loss and Collected Volatile Condensable Materials from Outgassing in a Vacuum Environment (DoD adopted).

(Copies of this document are available online at http://www.astm.org and from ASTM INTERNATIONAL, 100 Barr Harbor Drive, West Conshohocken, PA 19428-2959.)

Downloaded from http://www.everyspec.com

C.2.4 Order of precedence. In the event of a conflict between the text of this appendix and the references cited herein (except for related specification sheets), the text of this appendix takes precedence. Nothing in this appendix, however, supersedes applicable laws and regulations unless a specific exemption has been obtained.

C.3 REQUIREMENTS

C.3.1 Specification sheets. Individual item requirements shall be as specified herein and in accordance with the applicable specification sheets. In the event of any conflict between requirements of this appendix and the specification sheet, the latter shall govern.

C.3.2 Critical interface requirements. The critical interfaces and physical dimensions of the attenuator chip shall be in accordance with the requirements of MIL-DTL-3933 and the specification sheet. A completed drawing of the attenuator chip showing dimensions, bond pad locations, and metallization descriptions and metal layer composition shall be made available to the preparing activity and to the qualifying activity prior to qualification. A unique critical interface identifier as part of the PIN (Y_1Y_2; see MIL-DTL-3933/29 and C.3.5 herein) shall be assigned to the specification sheet drawing based on any of the following differences:

a. Bond pad and backside metal [Y_1 as (A) for aluminum, (C) for copper, (G) for gold or (N) for nickel. Nickel shall be used only when no other material provides specified requirements.

b. Body style [Y_2 as (P) for open bond pads, (L) for welded leads already attached or (W) for wrap around leads].

C.3.2.1 Pure tin. The use of pure tin, as an underplate or final finish, is prohibited both internally and externally, for any chip attenuator metallization. Tin content of chip attenuator components and solder shall not exceed 97 percent, by mass. Tin shall be alloyed with a minimum of 3 percent lead, by mass (see C.6.2).

C.3.3 Qualification. Chip attenuators furnished under this specification shall be products which are qualified for listing on the applicable qualified products list, qualified to the requirements specified herein and in accordance with the applicable specification sheets.

C.3.4 Passivation of attenuator element. When used, polyimide passivation of the attenuator element shall maintain its physical, electrical and mechanical properties over the specified humidity, temperature and frequency range. The properties of low-out-gassing polyimide passivation used for Class K chip attenuators shall be subjected to the testing and verification procedures of ASTM-E595.

C.3.5 Part Identifying Number (PIN) (see MIL-DTL-3933/29). The military PIN consists of the letter “M” followed by the basic number of the specification sheet, an assigned dash (see 3.1), a “suffix letter” (X) (assigned by QPL-3933) denoting the chip manufacturer, the quality level classification “K” or “H” (see C.1.2) and a unique critical interface identifier (Y_1Y_2) (see C.3.2) assigned based on the metal finish on the bond pads or backside and the body style (see C.3.2).

C.3.6 Marking. The dB value of the attenuation shall be laser marked on the attenuator chip. Also, the chip shall be laser marked with the PIN “suffix number”, indicating the chip manufacturer (assigned by QPL-3933).

Downloaded from http://www.everyspec.com

APPENDIX C

C.4 VERIFICATION

C.4.1 Element evaluation. Chip attenuators from each inspection lot shall be evaluated in accordance with table C-I. Characteristics to be verified will be those necessary for compatibility with the element acquisition documents and assembly procedures and at least those which cannot be verified after assembly, but could cause functional failure.

C.4.1.1 Sequence of testing. Subgroups within a group of tests may be performed in any sequence, but individual tests within a subgroup shall be performed in the sequence indicated.

C.4.1.2 Class. Class H and class K element evaluation requirements are identified by X's in the appropriate column of table C-I.

C.4.1.3 Sample selection. Samples shall be randomly selected from inspection lots. The sample size columns in the evaluation tables give the minimum quantities to be evaluated with applicable accept number enclosed in parenthesis.

C.4.1.4 Test sample preparation. When assembly is required to perform electrical tests, test samples should be assembled such that the assembly methods and conditions the element will see during normal assembly will be simulated.

C.4.2 Qualification inspection. Qualification inspection shall be performed at a laboratory acceptable to the Government (see 6.3) on sample units produced with equipment and procedures normally used in production. Qualification obtained for each group (see appendix A) shall constitute qualification for all chip attenuators with characteristics for that group.

C.4.2.1 Inspection routine. The qualification inspection lot shall be based on the results of the first element evaluation performed in accordance with table C-I and submitted to the qualifying activity.

C.4.3 Conformance inspection.

C.4.3.1 General. Conformance inspection shall consist of group A and group B inspections. Group B inspection shall be performed under periodic inspection.

C.4.3.1.1 Inspection lot. An inspection lot shall consist of one device type with the same PIN produced under essentially the same conditions from the same production line and offered for inspection at one time.

C.4.3.2 Group A inspection. Group A inspection shall be conducted as shown in table C-I on all chip attenuators in the inspection lot. Chip attenuators that fail the 100 percent inspections of group A shall be removed from the inspection lot.

C.4.3.2.1 Accept on zero defects. This specification uses accept on zero defect sampling plan. No defective units shall be delivered or accepted, from the 100 percent inspections of group A. Class K chip attenuators whose lots experience in excess of 5 percent defective units during group A inspection shall be rejected in entirety. Class H chip attenuators whose lots experience in excess of 10 percent defective units during group A inspection shall be rejected in entirety.

C.4.3.3 Periodic inspection. Periodic inspection shall consist of the group B inspection shown in table C-2. Class K periodic inspection shall be performed on each inspection lot. Class H periodic inspection shall be performed every 24-months.

Downloaded from http://www.everyspec.com

C.4.3.3.1 Group B inspection. Group B inspection shall consist of the inspections specified in table C-2 in the order shown.

C.4.3.3.1.1 Mechanical strength. Mechanical strength shall be performed in accordance with MIL-STD-883, test method 2019. For chip attenuators that are attached to the substrate at the end terminations, the area used to determine the force applied shall be the total area of the mounting surface of the end terminations.

C.4.3.3.1.2 Wire bond strength. Wire bond strength testing applies to elements which are wire bonded during the device assembly operation. The sample will include at least 10 bond wires minimum.

C.4.3.3.1.3 Life. Class H chip attenuators shall be tested for a minimum of 380 hours at each end (for a total of 760 hours) at a temperature of 75°C ± 5 °C with a dc power input of 0.5 watt, +50 mw, -0 mw, that is derated 10 percent in accordance with the specification sheet. Class K chip attenuators shall be tested for a minimum of 168 hours at each end (for a total of 336 hours) at a temperature of 125 °C, +5 °C, -0 °C at the specified input power (see 3.1).

C.4.3.4 Nonconformance. Devices which fail any test criteria in group A shall be identified and controlled until removal from the inspection lot. If a sample fails to pass group B inspection, the manufacturer shall perform an analysis of the failure and take corrective action on the material or process that caused the failure. Group B inspection shall be repeated on additional samples for the subgroup(s) that failed. If the resubmitted sample fails the inspection which the original sample failed, acceptance and shipment of the product (and similar products), shall be discontinued. Corrective action shall cover all products accepted since the last successful completion of group B inspection. After corrective action has been taken and is acceptable to the government, group A inspection may be reinstituted; however, final acceptance shall be withheld until the group B inspection, (subgroups I and II), has passed and show that the corrective action is successful.

C.4.3.5 Rejected lots. Inspection lots that fail group A requirements shall be rejected. Inspection lots that fail resubmission for group B inspection shall be rejected. Rejected inspection lots shall not be delivered to the government on contracts for qualified products.

C.5 PACKAGING

C.5.1 Packaging. For acquisition purposes, the packaging requirements shall be as specified in the contract or order (see 6.2). When packaging of materiel is to be performed by DoD or in-house contractor personnel, these personnel need to contact the responsible packaging activity to ascertain packaging requirements. Packaging requirements are maintained by the Inventory Control Point's packaging activities within the Military Service or Defense Agency, or within the military service's system commands. Packaging data retrieval is available from the managing Military Department's or Defense Agency's automated packaging files, CD-ROM products, or by contacting the responsible packaging activity.

C.6 NOTES

(This section contains information of a general or explanatory nature that may be helpful, but is not mandatory.)

C.6.1 Intended use. The radio and microwave frequency surface mount chip attenuators described in appendix C are intended for use in established reliability electronic applications for use in space and for use in standard military equipment and environments.

Downloaded from http://www.everyspec.com

APPENDIX C

C.6.2 Tin whisker growth. The use of alloys with tin content greater than 97 percent, by mass, may exhibit tin whisker growth problems after manufacture. Tin whiskers may occur anytime from a day to years after manufacture and can develop under typical operating conditions, on products that use such materials. Conformal coatings applied over top of a whisker-prone surface will not prevent the formation of tin whiskers. Alloys of 3 percent lead, by mass, have shown to inhibit the growth of tin whiskers (see C.3.2.1). For additional information on this matter, refer to ASTM-B545 (Standard Specification for Electrodeposited Coatings of Tin).

TABLE C-I. Surface mount chip attenuator evaluation requirements (Group A).

Group A	Class K/H	Test	MIL-STD-202 method/condition	Quantity (accept on zero)	Reference paragraph
Step					
1	x/x	Visual & mechanical 1/	2032	100 percent	4.7.1
2	x/x	Element electrical		100 percent	4.7.2.3
3	x	Thermal shock (cycling)	107 B	100 percent	4.7.2.1
4	x	Element electrical		100 percent	4.7.2.3
5	x	Conditioning		100 percent	4.7.2.2.2
6	x/x	Stability of attenuation		100 percent	4.7.11
7	x	Post element electrical		100 percent	4.7.2.5
8	x/x	Solderability	208 B	3(0)	4.7.8

1/ MIL-STD-883 test method.

TABLE C-II. Surface mount chip attenuator evaluation requirements (Group B).

Group B	Class K/H	Test	MIL-STD-202 method/condition	Quantity (accept on zero)	Reference paragraph
Subgroup I				3(0)	
Step					
1	x/x	Stability of attenuation			4.7.11
		With temperature			
		After thermal shock	107 B		
		After vibration	204 D		
		After shock	213 I		
		After peak power			
2	x/x	Sensitivity of attenuation			4.7.12
		After change in frequency			
		After change in input power			
		After change in temperature			
3	x/x	Visual & mechanical 1/	2032		
Subgroup II				2(0)	
Step					
1	x/x	Life test			C.4.3.3.1.3
2	x/x	Post element electrical			4.7.2.5
3	x/x	Mechanical strength 1/	2019		C.4.3.3.1.1
4	x/x	Wire bond strength 1/	2011	10(0) wires	C.4.3.3.1.2

1/ MIL-STD-883 test method.

Downloaded from http://www.everyspec.com

C.6.3 Amendment notations. The margins of this specification are marked with vertical lines to indicate modifications generated by this amendment. This was done as a convenience only and the Government assumes no liability whatsoever for any inaccuracies in these notations. Bidders and contractors are cautioned to evaluate the requirements of this document based on the entire content irrespective of the marginal notations.

Custodians:
Army - CR
Navy - EC
Air Force - 11
DLA - CC

Review activities:
Army - MI
Navy - AS, MC, SH
Air Force - 71, 99
NASA - NA

Preparing activity:
DLA - CC

(Project 5985-2007-018)

NOTE: The activities listed above were interested in this document as of the date of this document. Since organizations and responsibilities can change, you should verify the currency of the information above using the ASSIST Online database at http://assist.daps.dla.mil/.