Downloaded from http://www.everyspec.com

INCH-POUND

MIL-DTL-38999M
w/AMENDMENT 1
26 January 2017
SUPERSEDING
MIL-DTL-38999M
11 February 2015

DETAIL SPECIFICATION

CONNECTORS, ELECTRICAL, CIRCULAR, MINIATURE, HIGH DENSITY, QUICK DISCONNECT (BAYONET, THREADED OR BREECH COUPLING), ENVIRONMENT RESISTANT WITH CRIMP REMOVABLE CONTACTS OR HERMETICALLY SEALED WITH FIXED, SOLDERABLE CONTACTS, GENERAL SPECIFICATION FOR

This specification is approved for use by all
Departments and Agencies of the Department of Defense.

1. SCOPE

1.1 Scope. This specification covers four series of miniature, high density, circular, environment resistant electrical connectors with removable crimp contacts, or hermetically sealed electrical connectors with fixed, nonremovable contacts. Both environment resistant and hermetically sealed connectors are available with bayonet, threaded, or breech-coupled mating systems. Connectors are capable of operating within a temperature range of -65°C to +200°C maximum, or as specified herein (see 1.4). See 6.1 for intended use and applications.

1.2 Series description. All series include rear release removable pin or socket contacts with crimp termination. All series include hermetically sealed receptacles with fixed pin or socket contacts with solderable solder cup, eyelet or feed-thru terminations. All series are designed to assure proper orientation of the mating halves prior to electrical engagement. All series include EMI shielding capability. Series I, III and IV connectors have conductive finishes that provide electrical continuity between mated shells prior to contact engagement and have the contacts so located as to be protected from handling damage and inadvertent electrical contact. Series II connectors provide a low silhouette for minimum size and weight, and include connectors which provide shell-to-shell electrical continuity when mated.

Comments, suggestions, or questions on this document should be addressed to DLA Land and Maritime - VAI, P.O. Box 3990, Columbus OH 43218-3990 or emailed to CircularConnector@dla.mil. Since contact information can change, you may want to verify the currency of this address information using the ASSIST Online database at https://assist.dla.mil.

AMSC N/A

FSC 5935

Downloaded from http://www.everyspec.com

1.2.1 Connector series and types. Connectors fabricated to this specification include the following series and types:

a. Series: Series I, II, III, and IV connectors are not interchangeable or intermateable.

I - Scoop-proof, bayonet coupling,
(inch-pound dimensions and measurements).

II - Non-scoop-proof, bayonet coupling, low silhouette,
(inch-pound dimensions and measurements).

III - Scoop-proof, triple start, self-locking, threaded coupling,
(metric dimensions and measurements).

IV - Scoop-proof, breech coupling,
(metric dimensions and measurements).

b. Types:

(1) Plugs:

- Straight, without spring fingers.
- Straight, with spring fingers that electrically engage receptacle shell prior to contact engagement (series I, III and IV only).
- Straight, with spring fingers that electrically engage receptacle shell after contacts engage (series II only).
- Lanyard release.

(2) Receptacles:

- Box mounting, both front and rear panel mounting.
- Wall mounting, both front and rear panel mounting.
- Jam nut, rear panel mounting.
- Solder mounting.
- Thru-bulkhead.

Downloaded from http://www.everyspec.com

1.3 Part or Identifying Number (PIN). Unless otherwise specified in the detail specification sheet, PINs for products acquired to this specification are formatted as shown in the following PIN examples:

a. PIN example for series I and II:

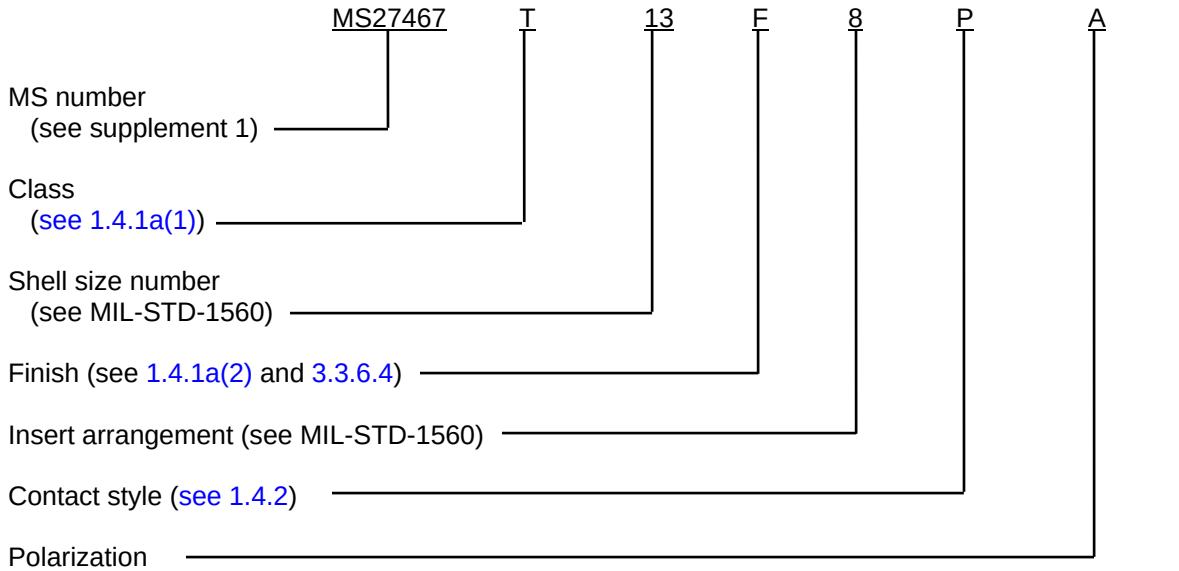

(See figure 5. Note: For the normal position only, no letter designator is marked on the part, and no letter designator is included in the PIN to indicate the "normal" position. A letter designator is required for all other polarization positions.)

b. PIN example for series III and IV:

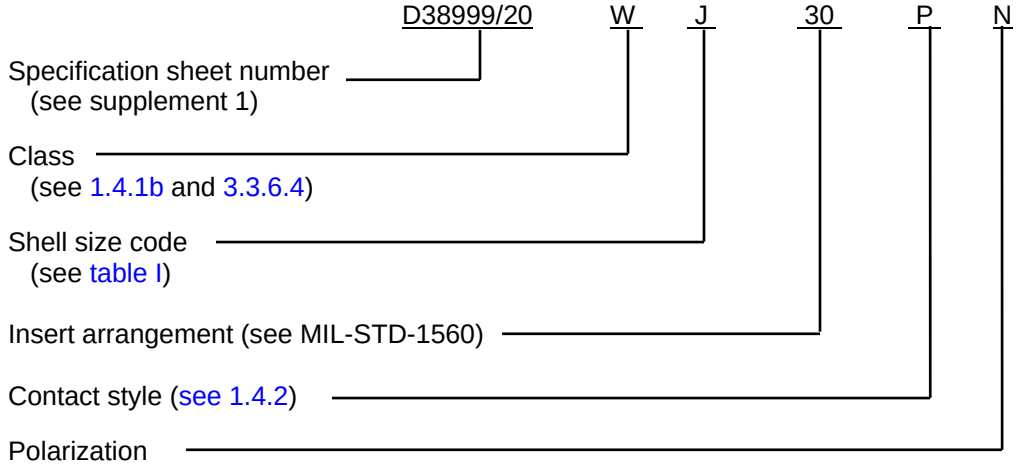

(See figure 6 for series III. See figure 7 for series IV. Note: A letter designator is required for all polarization positions.)

Downloaded from http://www.everyspec.com

TABLE I. Shell size code for series III and IV part numbering.

Shell size	Code letter	Shell size	Code letter	Shell size	Code letter
9	A	15	D	21	G
11	B	17	E	23	H
13	C	19	F	25	J

1.4 Classification.

1.4.1 Classes and finishes: PIN letter designators for series I and II classes, and PIN letter designators for series III and IV classes and materials / surface finishes, are described below.

Class designators, series I and II - indicates environment resistant or hermetic type sealing, only (a separate letter designator is provided for the connector shell surface finish and temperature rating).

Class designators, series III and IV - indicates environment resistant or hermetic, and also includes the shell surface finish, material and temperature range (see table II).

Restrictions: For series I through IV classes or surface finishes that are inactive for new design, or for series I through IV classes or surface finishes which are no longer for use by military departments, see section 6.1.1.d.

a. Series I and II.

(1) Classes, series I and II: Class designators for series I and II indicate whether or not the connector is environment resistant (PIN letter designators E, G or T), hermetically sealed (PIN letter designators H and Y), or if it is designed for potting to produce environmental resistance (PIN letter designator P). Classes are listed below:

E - Environment resisting – Box and thru-bulkhead mounting receptacle types. (Notes: Box mount receptacles are not environment resistant and have no accessory threads. Class E wall mount or jam nut receptacles are intended to be used with compression nuts (also called “E nuts”), or SAE-AS85049/27 compression nuts, when specified.)

G - Same as class T, except space grade, environment resisting - wall and jam nut mounting receptacle and plug types.

H - Same as class Y, except space grade (hermetically sealed).

P - For potting - includes potting form and short rear spacer grommet. (Note: Potted connectors are not available in box mounting style).

T - Environment resisting - Wall and jam nut mounting receptacle and plug types. These designs include provisions (thread and teeth) for rear accessory/ backshell attachment.

Y - Hermetically sealed.

Downloaded from http://www.everyspec.com

(2) Finishes, series I and II (see 3.3.6.4): The PIN for series I and II provides for separate finish designators to specify the shell finish or surface treatment and temperature range. See 6.1.1.d for finishes which are inactive for new design or which are no longer for use by military departments. Finish designators are listed below:

A - Silver to light iridescent yellow color cadmium plate over nickel (conductive) -65°C to +150°C.

B - Olive drab cadmium plate over a suitable underplate (conductive) -65°C to +175°C.

C - Anodic (nonconductive) -65°C to +200°C.

D - Fused tin, carbon steel (conductive) -65°C to +150°C.

E - Corrosion resistant steel, passivated (conductive) -65°C to +200°C.

F - Electroless nickel coating (conductive) -65°C to +200°C.

L - Corrosion resistant steel, conductive eletrodeposited nickel plating, -65°C to +200°C.

N - Hermetically sealed, environment resisting corrosion resistant steel (conductive electrodeposited nickel plating) -65°C to +200°C.

R - Same as F, but higher corrosion requirement -65°C to +200°C.

T - Nickel fluorocarbon polymer (conductive) -65°C to +175°C.

U - Same as A, but higher corrosion requirement -65°C to +150°C.

X - Same as B, but higher corrosion requirement -65°C to +150°C.

Z - Zinc nickel (conductive) -65°C to +175°C.

Downloaded from http://www.everyspec.com

b. Series III and IV.

Class designators for series III and IV identify whether the connector is environmental or hermetic, and also indicate a specific shell base material, shell surface finish, and temperature range (see table II). See 6.1.1.d for classes which are inactive for new design or which are no longer for use by military departments.

TABLE II. Classes, series III and IV – finishes, materials and temperature ranges.

Class	Environmental or hermetic	Shell material 1/	Finish (see 3.3.6.4)	Temperature range	Features
C	environment resistant	aluminum	anodic	-65°C to +200°C	nonconductive plating
F	environment resistant	aluminum	nickel (electroless)	-65°C to +200°C	conductive plating
G	environment resistant	aluminum	nickel (electroless)	-65°C to +200°C	same as F, but space grade
H	hermetically sealed	corrosion resistant steel	passivated	-65°C to +200°C	same as Y, but space grade
J	environment resistant	composite	cadmium olive drab	-65°C to +175°C	conductive plating
K	environment resistant	corrosion resistant steel	passivated	-65°C to +200°C	firewall, conductive
L	environment resistant	corrosion resistant steel	nickel (electrodeposited)	-65°C to +200°C	conductive plating
M	environment resistant	composite	nickel (electroless or electrodeposited)	-65°C to +200°C	conductive plating
N	hermetically sealed	corrosion resistant steel	nickel (electrodeposited)	-65°C to +200°C	conductive
R	environment resistant	aluminum	nickel (electroless)	-65°C to +200°C	same as F, but higher corrosion requirement
S	environment resistant	corrosion resistant steel	nickel (electrodeposited)	-65°C to +200°C	firewall, more conductive than K
T	environment resistant	aluminum	nickel fluorocarbon polymer	-65°C to +175°C	conductive plating
W	environment resistant	aluminum	cadmium olive drab	-65°C to +175°C	conductive plating
X	environment resistant	aluminum	cadmium olive drab	-65°C to +175°C	same as W, but higher corrosion requirement
Y	hermetically sealed	corrosion resistant steel	passivated	-65°C to +200°C	conductive
Z	environment resistant	aluminum	zinc-nickel	-65°C to +175°C	conductive plating

1/ Shell base materials: For aluminum connector shells, see 3.3.2.1. For classes K, L and S, see 3.3.2.2. For hermetically sealed classes H, N and Y, see 3.3.2.3. For classes J and M, see 3.3.2.4.

Downloaded from http://www.everyspec.com

Note: The upper temperature is the maximum internal hotspot temperature resulting from any combination of electrical load and ambient conditions.

Note: 175°C is the maximum temperature rating of a heat shrink sleeve used with specified size 8 shielded contacts. The temperature rating of a connector rated to 200°C maximum will be reduced to 175°C when it utilizes heat shrink sleeves with SAE-AS39029/90, /91, /113 or /114 size 8 pin or socket contacts.

1.4.2. Contact styles:

a. The following contact letter designators are for use with connectors populated with standard insert arrangements as specified in MIL-STD-1560. Unless otherwise specified, all styles are 500-cycle contacts.

P - Pin - including hermetics with solder cups.
S - Socket - including hermetics with solder cups.
H - Pin - 1500-cycle contact.
J - Socket - 1500-cycle contact.
X - Pin - with eyelet termination (hermetic only).
Z - Socket - with eyelet termination (hermetic only).
C - Pin – feed-thru (hermetic only).
D - Socket – feed-thru (hermetic only).
R - Pin - rhodium plating, including hermetics with solder cups.
M - Socket - rhodium plating, including hermetics with solder cups.
G - Pin - heavy gold plating, including hermetics with solder cups.
U - Socket - heavy gold plating, including hermetics with solder cups.

The P, S, H, J, X, Z, C, D, R, M, G and U designators are used to indicate that connectors will be supplied with a full complement of the applicable standard contacts as specified in MIL-STD-1560. These designators are part of the connector Part or Identifying Number (PIN) and should be marked on the connectors. Standard contacts are required to be qualified to SAE-AS39029. See table XXI for intended use and applications.

Connectors that accommodate crimp removable contacts (P, S, H, J, R, M, G or U) may be ordered without standard contacts by adding the appropriate note on the contract. However, the connector PIN and the marking requirements remain unchanged (see 3.4.1.1, 3.52 and 6.2).

b. The following contact designators are for use with connectors populated with non-standard contact complements (i.e., contact complements other than those specified in MIL-STD-1560):

A - Connector with pin contact insert less standard pin contacts.
B - Connector with socket contact insert less standard socket contacts.

The A and B designators are part of the connector PIN and should be marked on the connectors.

When A and B designators are used, standard contacts should not be supplied with the connectors. The contacts that will be used with the connectors must be specified separately (see 3.4.1.1, 3.52 and 6.2). A and B designators should not be used for ordering connectors less contacts if the user intends to put the standard complement of contacts in the connectors.

Downloaded from http://www.everyspec.com

As an example, A and B contact designators would be specified when the user intends to populate a standard connector insert with other than the standard complement of contacts (e.g., shielded, coaxial, thermocouple, or other types of contacts, or fiber optic termini) required by MIL-STD-1560 for that particular insert arrangement.

Note: If inserts are populated with contacts and/or termini other than the standard contacts specified in MIL-STD-1560 for that insert arrangement, then the connectors may not meet the requirements stated herein.

2. APPLICABLE DOCUMENTS

2.1 General. The documents listed in this section are specified in sections 3 and 4 of this specification. This section does not include documents cited in other sections of this specification or recommended for additional information or as examples. While every effort has been made to ensure the completeness of this list, document users are cautioned that they must meet all specified requirements of documents cited in sections 3 and 4 of this specification, whether or not they are listed.

2.2 Government documents.

2.2.1 Specifications, standards, and handbooks. The following specifications, standards, and handbooks form a part of this document to the extent specified herein. Unless otherwise specified, the issues of these documents are those cited in the solicitation or contract (see 6.2).

FEDERAL STANDARD

FED-STD-H28	-	Screw-Thread Standards for Federal Services.
FED-STD-H28/2	-	Screw-Thread Standards for Federal Services Section 2 Unified Inch Screw Threads - UN and UNR Thread Forms.

(Copies of these documents are available online at http://quicksearch.dla.mil.)

DEPARTMENT OF DEFENSE SPECIFICATIONS

MIL-DTL-17	-	Cables, Radio Frequency, Flexible and Semi-rigid, General Specification for.
MIL-S-901	-	Shock Tests, H.I. (High-Impact); Shipboard Machinery, Equipment and Systems, Requirements.
MIL-S-7742	-	Screw Threads, Standard, Optimum Selected Series, General Specification for.
MIL-A-8625	-	Anodic Coatings for Aluminum and Aluminum Alloys.
MIL-DTL-22520	-	General Specification for Crimping Tools, Wire Termination.
MIL-DTL-25038/3	-	Wire, Electrical, High Temperature, Fire Resistant, Flight Critical, Light Weight, Small Diameter.
MIL-R-25988/3	-	Rubber, Fluorosilicone Elastomer, Oil- and Fuel-Resistant, O-rings, Class 1, Grade 60.
MIL-DTL-38999/28	-	Connectors, Electrical, Circular, Nut, Hexagon, Connector Mounting, Series III and IV, Metric.
MIL-DTL-45204	-	Gold Plating, Electrodeposited.
MIL-A-46146	-	Adhesive Sealants, Silicone, RTV, Non-corrosive (for use with Sensitive Metals and Equipment).
MIL-DTL-81381	-	Wire, Electrical, Polyimide-Insulated, Copper or Copper Alloy.
MIL-W-81381/7	-	Wire, Electric, Fluorocarbon/Polyimide Insulated, Light Weight, Silver Coated Copper Conductor, 600 Volts, Nominal 5.8 Mil Wall.

Downloaded from http://www.everyspec.com

MIL-I-81969/8	-	Installing and Removal Tools, Connector Electrical Contact, Types I and II, Class 2, Composition A.
MIL-I-81969/14	-	Installing and Removal Tools, Connector Electrical Contact, Type III, Class 2, Composition B.
MS3186	-	Connector Mounting to Connectors, Mounting Nuts, Plain Hexagon.
MS27467	-	Connectors, Plug, Electrical, Straight, Crimp Type, Bayonet Coupling, Series I.
MS27488	-	Plug, End Seal, Electrical Connector.
MS27496	-	Connector, Receptacle, Electrical, Box Mounting, Crimp Type, Bayonet Coupling, Series I.
MS27499	-	Connector, Receptacle, Electrical, Box Mounting Flange, Crimp Type, Bayonet Coupling, Series II.
MS27505	-	Connector, Receptacle, Electrical, Back Panel, Box Mounting Flange, Crimp Type, Bayonet Coupling, Series I.
MS27508	-	Connector, Receptacle, Electrical, Back Panel Box Mounting Flange, Crimp Type, Bayonet Coupling, Series II.

(See supplement 1 for list of specification sheets.)

(Copies of these documents are available online at http://quicksearch.dla.mil .)

DEPARTMENT OF DEFENSE STANDARDS

MIL-STD-202-110	-	Method 110, Sand and Dust.
MIL-STD-202-204	-	Method 204, Vibration, High Frequency.
MIL-STD-790	-	Standard Practice for Established Reliability and High Reliability Qualified Products List (QPL) Systems for Electrical, Electronic, and Fiber Optic Parts.
MIL-STD-810	-	Test Method Standard for Environmental Engineering Considerations and Laboratory Tests.
MIL-STD-889	-	Dissimilar Metals.
MIL-STD-1285	-	Marking of Electrical and Electronic Parts.
MIL-STD-1560	-	Insert Arrangements for MIL-DTL-38999 and MIL-DTL-27599 Electrical, Circular Connectors.

(Copies of these documents are available online at http://quicksearch.dla.mil.)

2.2.2 Other Government documents, drawings, and publications. The following other Government documents, drawings, and publications form a part of this document to the extent specified herein. Unless otherwise specified, the issues are those cited in the solicitation or contract.

NATIONAL AERONAUTICAL SPACE ADMINISTRATION (NASA)

NASA Reference Publication 1124 - Outgassing Data for Selecting Spacecraft Materials.

(Copies of these documents are available online at http://outgassing.nasa.gov or from the Office of Safety and Mission Quality, (code QR), NASA, Headquarters, Washington, DC 20546.)

2.3 Non-Government publications. The following documents form a part of this document to the extent specified herein. Unless otherwise specified, the issues of these documents are those cited in the solicitation or contract (see 6.2).

Downloaded from http://www.everyspec.com

ELECTRONIC COMPONENTS INDUSTRY ASSOCIATION (ECIA)

EIA/ECA-364-21	-	Insulation Resistance Test Procedure for Electrical Connectors, Sockets, and Coaxial Contacts.
EIA/ECA-364-26	-	Salt Spray Test Procedure for Electrical Connectors, Contacts and Sockets.
EIA/ECA-364-29	-	Contact Retention Test Procedure for Electrical Connectors.
EIA/ECA-364-75	-	Lightning Strike Test Procedure for Electrical Connectors.
EIA-359	-	EIA Standard Colors for Color Identification and Coding.
EIA-364	-	Electrical Connector/Socket Test Procedures including Environmental Classifications.
EIA-364-02	-	Air Leakage Test Procedure for Electrical Connectors.
EIA-364-03	-	Altitude Immersion Test Procedure for Electrical Connectors.
EIA-364-06	-	Contact Resistance Test Procedure for Electrical Connectors.
EIA-364-10	-	Fluid Immersion Test Procedure for Electrical Connectors.
EIA-364-14	-	Ozone Exposure Test Procedure for Electrical Connectors.
EIA-364-20	-	Withstanding Voltage Test Procedure for Electrical Connectors, Sockets and Coaxial Contacts.
EIA-364-24	-	Maintenance Aging Test Procedure for Electrical Connectors.
EIA-364-27	-	Mechanical Shock (Specified Pulse) Test Procedure for Electrical Connectors.
EIA-364-28	-	Vibration Test Procedure for Electrical Connectors and Sockets.
EIA-364-31	-	Humidity Test Procedure for Electrical Connectors and Sockets.
EIA-364-32	-	Thermal Shock (Temperature Cycling) Test Procedure for Electrical Connectors and Sockets.
EIA-364-35	-	Insert Retention Test Procedure for Electrical Connectors.
EIA-364-42	-	Impact Test Procedure for Electrical Connectors.
EIA-364-45	-	Firewall Flame Test Procedure for Electrical Connectors.
EIA-364-46	-	Microsecond Discontinuity Test Procedures for Electrical Connectors, Contacts and Sockets.
EIA-364-54	-	Magnetic Permeability Test Procedure for Electrical Connectors, Contacts, and Sockets.
EIA-364-66	-	EMI Shielding Effectiveness Test Procedure for Electrical Connectors.
EIA-364-78	-	Cavity-to-Cavity Leakage Bonding Integrity Test Procedure for Electrical Connectors.
EIA-364-79	-	Insert Bond Strength Test Procedure for Electrical Connectors.
EIA-364-83	-	Shell-To-Shell and Shell-To-Bulkhead Resistance Test Procedure for Electrical Connectors.
EIA-364-105	-	Low Temperature Test Procedure for Electrical Connectors.
EIA-364-114	-	Coupling and Uncoupling Force Test Procedure for Electrical Connectors, Sockets and Applicable Accessories.

(Copies of these documents are available online at http://eciaonline.org or from the Electronic Components Industry Association (ECIA), 1111 Alderman Dr., Suite 400, Alpharetta, GA 30005-4175.)

ASME INTERNATIONAL

ASME Y14.5	-	Dimensioning and Tolerancing.

(Copies of this document are available online at http://www.asme.org or from the ASME International, Three Park Avenue, New York, NY 10016-5990.)

Downloaded from http://www.everyspec.com

ASTM INTERNATIONAL

ASTM B339	-	Standard Specification for Pig Tin.
ASTM B545	-	Standard Specification for Electrodeposited Coatings of Tin.
ASTM B634	-	Standard Specification for Electrodeposited Coatings of Rhodium for Engineering Use.
ASTM B733	-	Standard Specification for Autocatalytic (Electroless) Nickel Phosphorus Coatings on Metal.
ASTM B841	-	Standard Specification for Electrodeposited Coatings of Zinc Nickel Alloy Deposits.
ASTM D570	-	Standard Test Method for Water Absorption of Plastics.
ASTM E595	-	Standard Test Method for Total Mass Loss and Collected Volatile Condensable Materials from Outgassing in a Vacuum Environment.

(Copies of these documents are available at http://www.astm.org or ASTM International, 100 Barr Harbor Drive, PO Box C700, West Conshohocken, Pennsylvania 19428-2959.)

INTERNATIONAL ORGANIZATION FOR STANDARDIZATION (ISO)

ISO 68-1	-	ISO General Purpose Screw Threads, Basic profile, Part 1: Metric Screw Threads.
ISO 261	-	ISO General Purpose Metric Screw Threads, General Plan.
ISO 262	-	ISO General Purpose Metric Screw Threads, Selected Sizes for Screws, Bolts and Nuts.
ISO 965-1	-	ISO General Purpose Metric Screw Threads, Tolerances, Part 1: Principles and Basic Data.
ISO 965-2	-	ISO General Purpose Metric Screw Threads, Tolerances, Part 2: Limits of Sizes for General Purpose External and Internal Screw Threads, Medium Quality.
ISO 965-3	-	ISO General Purpose Metric Screw Threads, Tolerances, Part 3: Deviations for Constructional Screw Threads.

(Copies of these documents are available online at http://www.iso.ch or from the International Organization for Standardization American National Standards Institute, 11 West 42nd Street, 13th Floor, New York, NY 10036.)

SAE INTERNATIONAL

SAE-AIR1351	-	Manufacturers' Identification of Aerospace Electrical and Electronic Wiring Devices and Accessories.
SAE-AMS-QQ-P-416	-	Plating, Cadmium (Electrodeposited).
SAE-AMS-QQ-N-290	-	Nickel Plating (Electrodeposited).
SAE-AMS2454	-	Plating, Electroless Nickel, Codeposited with Polytetrafluoroethylene (PTFE).
SAE-AS22759	-	Wire, Electrical, Fluoropolymer-Insulated, Copper or Copper Alloy.
SAE-AS22759/9	-	Wire, Electric, Fluoropolymer-Insulated, Extruded TFE, Silver-Coated Copper Conductor, 1000-Volt.
SAE-AS39029	-	Contacts, Electrical Connector, General Specification for.
SAE-AS39029/59	-	Contacts, Electrical Connector, Socket, Crimp Removable, Shielded, Size 8 (for MIL-C-38999 Series I, III, and IV Connectors).
SAE-AS39029/60	-	Contacts, Electrical Connector, Pin, Crimp Removable, Shielded, Size 8 (for MIL-C-38999 Series I, III, and IV Connectors).
SAE-AS39029/90	-	Contacts, Electrical Connector, Concentric Twinax, Pin, Size 8.
SAE-AS39029/91	-	Contacts, Electrical Connector, Concentric Twinax, Socket, Shielded, Size 8.

Downloaded from http://www.everyspec.com

SAE-AS39029/113	-	Contact, Electrical Connector, Concentric Twinax, Pin, Size 8 (for MIL-DTL-38999 Series I, III, and IV Connectors).
SAE-AS39029/114	-	Contact, Electrical Connector, Concentric Twinax, Socket, Size 8 (for MIL-DTL-38999 Series I, III, and IV Connectors).
SAE-AS81969/1	-	Installing and Removal Tools, Connector Electrical Contact, Type III, Class 2, Composition C.
SAE-AS81969/8	-	Installing and Removal Tools, Connector Electrical Contact, Type I & II, Class 2, Composition A.
SAE-AS85049	-	Connector Accessories, Electrical General Specification for.
SAE-AS85049/80	-	Connector Accessories, Electrical, Dummy Contact, Sizes 12 and 8, Category 7 (for MIL-DTL-38999 Connectors).
SAE-AS85049/81	-	Connector Accessories, Electrical, Seal Plug, Size 10, Category 7 (for MIL-DTL-38999 Connectors).
SAE-AS85049/103	-	Connectors, Accessories, Composite, RFI/EMI, Electrical, Strain Relief, Straight, Self-locking, Category 3C (for MIL-DTL-38999 Series III and IV Connectors) – FSC 5935.
SAE-EIA557	-	Statistical Process Control Systems.

(Copies of these documents are available at http://www.sae.org or SAE International, 400 Commonwealth Drive, Warrendale, PA 15096-0001, and Tel: 877-606-7323 (inside USA and Canada) or 724-776-4970 (outside USA), or email: CustomerService@sae.org.)

2.4 Order of precedence. Unless otherwise noted herein or in the contract, in the event of a conflict between the text of this document and the references cited herein (except for related specification sheets), the text of this document takes precedence. Nothing in this document, however, supersedes applicable laws and regulations unless a specific exemption has been obtained.

3. REQUIREMENTS

3.1 Specification sheets. The individual item requirements shall be as specified herein and in accordance with the applicable specification sheet. In the event of any conflict between the requirements of this specification and the specification sheet, the latter shall govern.

3.2 Qualification. Connectors and accessories furnished under this specification shall be products that are authorized by the qualifying activity for listing on the applicable qualified products list before contract award (see 4.3 and 6.3). After qualification, if the manufacturer seeks to make design changes or process changes to qualified product, or if the manufacturer seeks to use alternate / substitute materials, then the manufacturer shall coordinate with the qualifying activity and obtain its approval for proposed changes prior to implementing design or process changes to qualified product.

3.2.1 Qualified Products List (QPL) system. The manufacturer shall establish and maintain a quality system that allows its parts that are covered by this specification to be listed on the QPL. Requirements for this system are specified in MIL-STD-790. In addition, the manufacturer shall establish a Statistical Process Control (SPC) system that meets the requirements specified in SAE-EIA557.

Downloaded from http://www.everyspec.com

3.3 Materials.

3.3.1 Critical interface materials. Materials shall be as specified herein. When a definite material is not specified, a material shall be used which shall enable the connector to meet the performance requirements of this specification.

3.3.1.1 Metals. Metals shall be of a corrosion-resistant type or shall be plated or treated to resist corrosion.

3.3.1.2 Dissimilar metals and compatible couples. When dissimilar metals are used in intimate contact with each other, protection against galvanic corrosion shall be provided. The use of dissimilar metals in contact, which tend toward active galvanic corrosion (particularly brass, copper, or steel used in contact with aluminum or an aluminum alloy) is not acceptable. However, metal plating of dissimilar base metals to provide similar or suitable abutting surfaces is permitted. The use of dissimilar metals separated by a suitable insulating material is also permitted. Dissimilar metals and compatible couples are specified in MIL-STD-889.

3.3.1.3 Pure tin. The use of pure tin, as an underplate or final finish, is prohibited both internally and externally. Tin content of connectors, their components and solder shall not exceed 97 percent, by mass. Tin shall be alloyed with a minimum of 3 percent lead, by mass (see 6.9).

3.3.2 Components. Materials for specific components of the connector shall be as follows:

3.3.2.1 Classes C, E, F, G, P, R, T, U, W, X and Z.

a. Shell and coupling ring - Impact extruded or machined aluminum alloy.
b. Jam nut, and potting ring - Machined aluminum alloy.
c. Insert - Reinforced epoxy resin or other suitable rigid dielectric material.
d. Bayonet pins - Corrosion-resistant steel.
e. Spring fingers - Heat-treated beryllium copper or corrosion-resistant steel.
f. Filler compound - RTV silicone in accordance with MIL-A-46146, or equivalent.
g. Gaskets, grommet, and interface seals - Silicone or fluorosilicone elastomer.

3.3.2.2 Classes K, L and S, environment resisting.

a. Shell - Corrosion resistant steel.
b. Coupling ring - Corrosion resistant steel.
c. Insert - Reinforced epoxy resin or other suitable rigid dielectric.
d. Spring fingers - Heat-treated beryllium copper or corrosion resistant steel.
e. Filler compound - RTV silicone in accordance with MIL-A-46146, or equivalent.
f. Gasket, grommet, and interfacial seal - Silicone or fluorosilicone elastomer.
g. Jam nut - Corrosion resistant steel.

3.3.2.3 Classes H, Y and N, hermetic receptacles.

a. Shell.
   (1) Flange, jam nut and solder mounting - Corrosion-resistant steel.
   (2) Flange, jam nut and solder mounting - Carbon steel (series I and II, finish D only).
   (3) Flange, weld mounting - Corrosion-resistant steel (type 304).
b. Insert.
   (1) Fused vitreous material for contact styles P, C, X, R and G.
   (2) Vitreous seal and rigid dielectric for contact styles D, S, Z, M and U.
c. Contacts - Nickel-iron 52 alloy or equivalent.
d. Bayonet pins – Corrosion resistant steel.
e. Gasket and interfacial seal - Silicone or fluorosilicone elastomer.
f. Jam nut - Jam nut shall be the same material and finish as the applicable connector.

Downloaded from http://www.everyspec.com

3.3.2.4 Classes J and M, composite connectors.

a. Shell, coupling ring and jam nut - These parts shall be of corrosion resistant, high performance, virgin resins, with or without filler materials. The resins shall be defined by specifications listed in the ASSIST Online database or published by professional materials associations. See 6.9 for guidance information.
b. Insert - Reinforced epoxy resin or other suitable rigid dielectric material.
c. Spring fingers - Heat-treated beryllium copper or corrosion resistant steel.
d. Filler compound - RTV silicone, in accordance with MIL-A-46146, or equivalent.
e. Gasket, grommet, and interfacial seal - Silicone or fluorosilicone elastomer.

3.3.3 Fungus resistance. Materials used in the construction of these connectors shall be fungus inert (see 4.2.2).

3.3.4 Magnetic permeability. Not applicable to finish D of series I and II. The relative permeability of the wired, assembled, and fully mated connector assembly shall be less than 2.0μ when measured in accordance with 4.5.48.

3.3.5 Recycled, recovered, or environmentally preferable, or biobased materials. Recycled, recovered, or environmentally preferable, or biobased materials should be used to the maximum extent possible, provided that the material meets or exceeds the operational and maintenance requirements, and promotes economically advantageous life cycle costs.

3.3.6 Plating or surface finish.

3.3.6.1 Contacts (hermetic receptacles). The following is applicable to contacts with contact designators P, S, X, Z, C, D, R, M, G and U. Contacts shall be gold-plated to a minimum thickness of .000050 inch (0.00127 mm) in accordance with MIL-DTL-45204 over a suitable underplate. Silver underplate shall not be used. Rhodium contacts (designators R and M) shall be a minimum of .000050 inch (0.00127 mm) rhodium plate in accordance with ASTM B634 over a minimum of .000150 inch (0.004 mm) nickel plate. Heavy gold contacts (designators G and U) shall have a minimum plating thickness of .000100 inch (0.00254 mm) .000100 inch (0.00254 mm) gold plate in accordance with MIL-DTL-45204 over a minimum of .000050 inch (0.00127 mm) nickel plate. Wire marks on the back of the contact around the "nonfunctional" outside diameter of the wire well caused by electrical contact for plating are permissible.

Downloaded from http://www.everyspec.com

3.3.6.2 Shells and accessory hardware. Unless otherwise specified, the plating or surface finish on shells and accessory hardware shall be in accordance with the following designations:

Series I and II finishes:

A - Nickel plate, .0002 inch (0.005 mm) minimum, followed by cadmium plate, .0001 inch (0.003 mm) minimum, in accordance with SAE-AMS-QQ-P-416, type II. A preliminary plate of other metal is permissible. The final finish shall be electrically conductive and shall be silver to light iridescent yellow in color.

B - Olive drab cadmium plate in accordance with SAE-AMS-QQ-P-416 over a suitable underplate. Final finish shall be electrically conductive.

C - Hard, anodic, nonconductive in accordance with MIL-A-8625, type III, .0008 inch (0.020 mm) minimum thickness.

D - Fused tin plate in accordance with ASTM B545 or ASTM B339. The tin shall be reflowed to promote solderability. Tin application process shall inhibit tin whisker growth.

E - Electrically conductive, stainless steel, passivated.

F - Electrically conductive electroless nickel plating conforming to ASTM B733, Service Category SC2, .0005 inches (0.013 mm) minimum thickness. Use of a suitable underplate is permissible Finish shall be capable of meeting salt spray (corrosion) testing in accordance with EIA/ECA-364-26 test condition B (48 hours).

L, N - Electrodeposited nickel in accordance with SAE-AMS-QQ-N-290, class 2, to a minimum thickness of .0001 inch (0.003 mm).

R - Electrically conductive, electroless nickel plating conforming to ASTM B733 (use of a suitable under plate is permissible) or electrodeposited nickel in accordance with SAE-AMS-QQ-N-290 (or an equivalent industry standard). The plating shall be such that connector finish shall withstand the salt spray (corrosion) test as specified in test procedure EIA/ECA-364-26, test condition A (96 hours).

T - Nickel fluorocarbon polymer. Nickel with fluorocarbon polymer additives conforming to SAE-AMS2454 over a suitable underplate to withstand 500 hours of dynamic salt spray testing. Color shall be nonreflective.

U - Nickel plate followed by cadmium plate in accordance with SAE-AMS-QQ-P-416, type II. A preliminary plate of other metal is permissible. The final finish shall be electrically conductive and shall be silver to light iridescent yellow in color. The plating shall be such that connector finish shall withstand the salt spray (corrosion) test specified in test procedure EIA/ECA-364-26, test condition A (96 hours).

Z - Zinc nickel in accordance with ASTM B841, type D (black), over a suitable underplate to withstand 500 hours of dynamic salt spray testing. Color shall be nonreflective.

Downloaded from http://www.everyspec.com

Series III and IV finishes:

W - Olive drab cadmium plate in accordance with SAE-AMS-QQ-P-416 over a suitable underplate. Final finish shall be electrically conductive.

L, N, S - Electrodeposited nickel in accordance with SAE-AMS-QQ-N-290, class 2, .0001 inch (0.003 mm) minimum thickness.

G, F - Electrically conductive electroless nickel plating conforming to ASTM B733, Service Category SC2 .0005 inches (0.013 mm) minimum thickness. Use of a suitable underplate is permissible. Finish shall be capable of meeting salt spray (corrosion) testing in accordance with EIA/ECA-364-26 test condition B (48 hours).

J - Olive drab cadmium plate in accordance with SAE-AMS-QQ-P-416 over a suitable underplate. Final finish shall be electrically conductive. The coupling ring and hex nut may be unplated. Finish shall be capable of meeting the dynamic salt spray (corrosion) requirements of 4.5.13.2.

M - Electrically conductive electroless nickel plating conforming to ASTM B733, Service Category SC2 .0005 inches (0.013 mm) minimum thickness or electrodeposited nickel plating conforming to SAE-AMS-QQ-N-290, class 2, .0003 inch (0.008 mm) minimum thickness. Use of a suitable underplate is permissible. Finish shall be capable of meeting the dynamic salt spray (corrosion) requirements of 4.5.13.2. The coupling ring and hex nut may be unplated.

C - Hard, anodic, nonconductive in accordance with MIL-A-8625, type III, .0008 inch (0.020 mm) minimum thickness.

H, K, Y - Electrically conductive, corrosion resistant steel, passivated.

R - Electrically conductive, electroless nickel plating conforming to ASTM B733 (use of a suitable under plate is permissible) or electrodeposited nickel in accordance with SAE AMS-QQ-N-290 (or an equivalent industry standard). The plating shall be such that this connector finish shall withstand the salt spray (corrosion) test specified in test procedure EIA/ECA-364-26, test condition letter A (96 hours).

T - Nickel with fluorocarbon polymer additives conforming to SAE-AMS2454 over a suitable underplate to withstand 500 hours of dynamic salt spray testing. Color shall be nonreflective.

Z - Zinc nickel in accordance with ASTM B841, type D (black), over a suitable underplate to withstand 500 hours of dynamic salt spray testing. Color shall be nonreflective.

3.3.6.3 Shell spring fingers. Shell spring fingers shall be suitably protected to prevent corrosion (see 3.4.4.1).

3.3.7 Hazardous materials. The use of environmentally preferable materials in the construction of these connectors is encouraged. See 6.9.2 for guidance.

3.4 Configuration interface and features. Connectors and accessories shall be configured to withstand normal handling incident to installation and maintenance in service. Connector intermateability control dimensions shall be as specified on figures 1 through 7. Connector accessory interface dimensions shall be as specified on figures 8, 9, and 10. All accessories designed to be used with MIL-DTL-38999 connectors shall conform to SAE-AS85049. Recommended panel cutout dimensions are shown on figure 11. Dimensioning and tolerancing shall be in accordance with ASME Y14.5. Unless otherwise specified, dimensions apply after plating.

Downloaded from http://www.everyspec.com

3.4.1 Contacts. Contacts shall be fixed or crimp removable, as specified.

3.4.1.1 Indirect shipment of contacts. Environment resisting connectors may be specified without contacts (see 1.4.2b and 6.2).

3.4.1.2 Fixed contacts. Types of contacts used in hermetically sealed or thru-bulkhead receptacles shall include nonremovable, solderable contacts with solder cup, eyelet or feed-thru terminations. Dimensions for solder cup, eyelet and feed-thru type contacts shall be as shown on figure 12. All solder cup openings shall be oriented so that they face the terminus of the indexing radius in accordance with MIL-STD-1560 and shall be perpendicular to the center line coinciding with the indexing radius. Tolerance of the centerline of the solder cup opening shall be within +/- 15° from the perpendicular. All eyelet terminations shall be oriented with the eyelet openings facing the same direction and in parallel to the center line coinciding with the indexing radius in accordance with MIL-STD-1560. Tolerance of the centerline of the eyelet opening shall be within +/- 15° from the perpendicular.

3.4.1.3 Crimp removable contacts. Crimp removable contacts shall be used with all environment resisting classes of connectors. Crimp contacts shall be qualified products in accordance with SAE-AS39029 (see 6.5). The quantity of crimp contacts to be supplied with each connector unit package shall consist of a full complement of contacts plus 1 spare contact for each size used in insert arrangements utilizing 26 contacts or less. For arrangements utilizing more than 26 contacts, 2 spare contacts of each size used in the arrangement shall be supplied. Spare coax and twinax contacts are not required.

3.4.1.4 Insert arrangements. Insert arrangements shall be in accordance with MIL-STD-1560. Except for hermetic assemblies, the engaging end of the pin contact in assembled connectors shall be located within .024 inch (0.61 mm) diameter of true position and the engaging end of socket contacts in assembled connectors shall be located within .015 inch (0.38 mm) diameter of true position. For hermetic connectors, the engaging end of pin and socket contacts shall be located within .004 inch (0.10 mm) diameter of true position. Test voltages for service ratings shall be as specified in table III.

TABLE III. Test voltages, ac rms, 60 Hz.

Altitude	Service rating M		Service rating N		Service rating I		Service rating II	
	Mated	Unmated	Mated	Unmated	Mated	Unmated	Mated	Unmated
Sea level	1300	1300	1000	1000	1800	1800	2300	2300
50,000 feet	800	550	600	400	1000	600	1000	800
70,000 feet	800	350	600	260	1000	400	1000	500
100,000 feet	800	200	600	200	1000	200	1000	200

3.4.1.5 Installing and removal tools. MIL-I-81969/8, MIL-I-81969/14, SAE-AS81969/1 and SAE-AS81969/8 tools shall be used to properly install and lock pin and socket contacts in place, and release and remove pin and socket contacts from their respective contact cavities. One MIL-I-81969/14 (contact sizes 8 through 22, including -22D and -22M), or one SAE-AS81969/1 (contact size 23 only) installing/removal tool for each contact size, as applicable, shall be enclosed in the unit package. For indirect shipments (see 3.4.1.1), or when connectors are ordered with an A or B contact designator (see 1.4.2b), connectors may be specified without installation and removal tools (see 6.2).

3.4.1.6 Dust caps/containers. Dust caps shall be placed on the mating end of each connector. For RFI plug connectors with spring fingers, dust caps must be assembled externally over the coupling ring. Hermetic connectors require caps on both ends. In lieu of dust caps on both ends, hermetic receptacles may be packaged in rigid or semi-rigid containers designed to prevent damage to the termination end of the connector.

Downloaded from http://www.everyspec.com

3.4.2 Insert interface.

3.4.2.1 Environment resisting classes. The entire insert and wire sealing or wire supporting member of the environment resisting assemblies shall be essentially one integral part, configured to provide suitable sealing and support (except box mount connectors) around the wires and to be nonremovable. The rigid dielectric shall be one molded piece or no more than two pieces bonded so as to form essentially one integral piece. The configuration shall be such as to permit the removal and replacement of individual contacts into their connector inserts with MIL-I-81969/8, MIL-I-81969/14, SAE-AS81969/1 or SAE-AS81969/8 installation/removal tools. The contact locking device shall be contained in the rigid dielectric insert and shall so retain the contacts as to meet the contact retention requirements of this specification. Inserts shall be secured to prevent rotation. All pin contact inserts shall have a resilient interface seal bonded to the front face in accordance with the applicable standards. Socket entry holes and pin "donut" rings shall conform to the requirements on figure 13, figure 14 and figure 15.

3.4.2.2 Hermetic receptacles. Vitreous material shall be used for fusing to metal to insulate and seal contacts. The insert member for socket contact styles S, D, M, U and Z shall be a two-piece construction consisting of a reinforced rigid dielectric socket support member bonded to the face of the vitreous insert and mechanically retained in the shell. Socket insert entry holes shall conform to the requirements depicted on figure 12. All pin contact inserts shall have a resilient interface seal bonded to the front face of the vitreous insert in accordance with the applicable standards. Pin "donut" rings shall conform to the requirements as specified on figure 13, figure 14 and figure 15.

3.4.3 Sealing.

3.4.3.1 Wire sealing. Not applicable to box mount connectors. Environment resisting assemblies shall be designed to meet the environmental requirements of this specification using wire of outer diameter within the applicable range as shown in table IV.

Downloaded from http://www.everyspec.com

TABLE IV. Wire and cable sizes and diameters.

Contact size (mating end)	Wire barrel size	Wire size (AWG)	Finished wire outside dimensions			
			minimum		maximum	
			Inches	mm	Inches	mm
23	22	26, 24, 22	.030	0.76	.050	1.27
22	22D	28, 26, 24, 22	.030	0.76	.054	1.37
22	22M 1/	28, 26, 24	.030	0.76	.050	1.27
22	22 1/	26, 24, 22	.034	0.86	.060	1.52
20	20	24, 22, 20	.040	1.02	.083	2.11
16	16	20, 18, 16	.065	1.65	.109	2.77
12	12	14, 12	.097	2.46	.142	3.61
10	10	10	.135	3.43	.162	4.12
8 coax	N/A	M17/95-RG180 2/ 3/	.135	3.43	.155	3.94
8 twinax	N/A	M17/176-00002 2/ 3/	.124	3.15	.134	3.40

1/ Inactive for new design.

2/ Cable in accordance with MIL-DTL-17.

3/ MIL-STD-1560 insert arrangements 17-2, 19-18, 21-75, 25-7, 25-8, 25-20 and 25-90 use size 8 twinax contacts in accordance with SAE-AS39029/90 and /91, insert arrangements 17-3, 19-19, 21-76, 25-9, 25-10, 25-21, and 25-91 use size 8 twinax contacts in accordance with SAE-AS39029/113 and /114, and insert arrangements 25-46 and 25-47 use size 8 coax contacts in accordance with SAE-AS39029/59 and /60.

NOTE: Connectors shall meet the requirements specified herein when:

a. A full complement of wire of the applicable minimum or maximum insulation diameter is installed.
b. Any combination of wire diameters within the extremes of (a), above are used.

3.4.3.2. Sealing boots.

3.4.3.2.1 Sealing boots for MIL-STD-1560 insert arrangements 17-3, 19-19, 21-76, 25-9, 25-10, 25-21, 25-47 and 25-91. For the subject insert arrangements, connector size 8 grommet cavities shall be designed to accept sealing boots in accordance with MIL-DTL-38999/62 for use with size 8 twinax and coax contacts. The full complement of twinax or coax sealing boots, as applicable, shall be supplied to seal the contact to the grommet and to the applicable cable (either M17/176-00002 or M17/95-RG180). When connectors are ordered with the A or B contact designation (see 1.4.2b), or for indirect shipments (see 3.4.1.1), connectors may be ordered without sealing boots (see 6.2).

3.4.3.2.2 Sealing boots for MIL-STD-1560 insert arrangements 17-2, 19-18, 21-75, 25-7, 25-8, 25-20, 25-46 and 25-90. For the subject insert arrangements, qualified manufacturers' grommet contact cavity designs may require a separate, non-standard cable/grommet size 8 sealing boot to meet environmental sealing requirements. If the manufacturer's design requires separate sealing boots, then the full complement of sealing boots for use with size 8 twinax or coax contacts and associated cables in accordance with M17/176-00002 or M17/95-RG180, as applicable, shall be supplied with each connector. When connectors are ordered with the A or B contact designation (see 1.4.2b), or for indirect shipments (see 3.4.1.1), connectors may be ordered without sealing boots (see 6.2). Note: For the subject insert arrangements, some qualified manufacturers' insert arrangement designs require only the use of a heat shrink sleeve for installation of the size 8 shielded contact within the grommet cavity. For insert arrangement 25-20 only, most qualified manufacturers' connector designs use only a heat shrink sleeve to environmentally seal the size 8 twinax contacts and do not require a separate sealing boot.

Downloaded from http://www.everyspec.com

3.4.3.3 Grommet sealing plugs and dummy contacts. Except for box mount connectors and as otherwise specified (see 3.1), the grommets of environment resisting connectors shall be designed to accept sealing plugs/dummy contacts in accordance with MS27488, SAE-AS85049/80 or SAE-AS85049/81 as applicable, in lieu of wire where unwired contacts are employed. The quantity of sealing plugs to be enclosed in the unit pack shall be ten percent of the number of contacts, but not less than one, for each contact size. For indirect shipments, connectors may be specified without grommet sealing plugs (see 6.2). The following connectors are not designated to accept sealing plugs, and therefore, sealing plugs shall not be provided in the unit packages: MS27496, MS27499, MS27505, MS27508, all hermetic connectors, and thru-bulkhead connectors, and all series I class P connectors.

3.4.3.4 Mating (interfacial and peripheral) seals. Plugs and receptacles with pin inserts shall have a resilient face, or interfacial seal, with individual pin barriers (i.e., pin “donut” rings or raised seal barriers) (see figure 13, figure 14 and figure 15). These pin barrier projections shall mate with counterpart lead-in chamfers of the socket entry holes of the hard face socket insert. The resilient interfacial seal shall provide individual contact seals in the mated condition to ensure circuit isolation between each contact and contact to shell. The receptacles of series I, II, and III shall be provided with a peripheral seal. Series IV plugs shall incorporate an O-ring peripheral seal.

3.4.4 Shells. Shells, including mounting flanges, shall be of one-piece construction and shall be designed to retain their inserts in one position, both axially and with respect to rotation, by mechanical means. Adhesive may be used as a supplementary retention means for environment resisting connectors. Each environment resistant type plug and receptacle connector shall have at least one blue color band in accordance with EIA-359, indicating a rear release contact retention system. The blue color band shall be located so that it is readily visible to any person servicing a mounted connector. Hermetic receptacles, which have fixed, nonremovable contacts, shall not include a blue color band.

3.4.4.1 Spring fingers. Not applicable to finish C (series I and II) or class C (series III and IV). All series I and III plugs shall have spring fingers. All series II and IV plugs noted "EMI grounding" (see 3.1) shall have spring fingers. Spring fingers shall be designed to make electrical contact with the mating shell without interfering with proper engagement. The springs shall be retained about the shell periphery. Minimum engagement of spring fingers shall be .040 (1.02 mm) prior to contact engagement for series I, III, and IV, and shall be after contact engagement for series II. Gold plating shall not be permitted on the spring fingers in connectors with cadmium plated shells.

3.4.4.2 Jam nut mounting receptacles, mounting nuts and O-rings. Series I and II jam nut mounting receptacles shall be provided with a mounting nut in accordance with MS3186. Series III and IV jam nut mounting receptacles shall be provided with a mounting nut in accordance with MIL-DTL-38999/28. All mounting nuts include provisions for locking. All jam nut mounting receptacles shall be provided with an O-ring in accordance with MIL-R-25988/3.

3.4.5 Screw threads. Screw threads shall conform to FED-STD-H28, MIL-S-7742, AFNOR NF ISO 68-1, AFNOR NF ISO 261, AFNOR NF ISO 262, AFNOR NF ISO 965-1, AFNOR NF ISO 965-2, and AFNOR NF ISO 965-3 as applicable. Threads shall be checked using ring or plug gauges. Slight out-of-roundness beyond the specified tolerances is acceptable if threads can accept the gauges without forcing.

3.4.6 Coupling. Connectors shall be coupled to counterpart connectors by the following three coupling methods: Series I and II connectors shall use a bayonet (non-threaded) coupling mechanism which utilizes bayonet pins on the receptacle to engage with spiral ramps during rotation of the counterpart plug’s coupling ring. Series III shall use a triple-start threaded, self-locking mechanism designed to mate with one full turn of the coupling ring. Series IV shall use a breech mechanism. Coupling mechanisms shall include a means of maintaining the mated connector in a fully mated condition and in full electrical engagement. Coupling rings shall be captivated. Coupling ring surfaces shall be knurled or fluted to facilitate gripping by the user. The coupling rings of all connectors, except hermetics, shall have a blue color band in accordance with EIA-359, indicating a rear release contact retention system.

Downloaded from http://www.everyspec.com

3.4.6.1 Ease of coupling. Counterpart connectors of any arrangement shall be capable of being fully coupled and uncoupled in a normal and accessible location without the use of tools.

3.4.6.2 Locking.

3.4.6.2.1 Locking, series I and II. For series I and II, a detent shall be provided in the coupling mechanism so that an audible click is evident when proper coupling is accomplished. Coupling rings of series I and II connectors and accessories shall be permanently attached. Provisions shall be made for visual determination that proper and full coupling has been achieved by ensuring that the bayonet pins are completely visible in the inspection hole. For ease of visual identification in the inspection hole, the end surfaces of all bayonet pins shall be of contrasting blue, orange or yellow color to the shell finish. For nickel plated shells, matte black bayonet pins are also acceptable. For olive drab or for black zinc-nickel connector shells, bright nickel plated bayonet pins are acceptable.

3.4.6.2.2 Locking, series III. For series III, complete coupling shall be accomplished by rotating the coupling ring until the coupling ring covers the mating indicator band and the connector shells bottom against each other. Complete coupling and uncoupling is accomplished by rotating the coupling ring approximately 360°. Fully coupled connectors shall maintain shell-to-shell bottoming and shall not exhibit any shifts in resonance points during testing in accordance with 4.5.23.2.3. Mated connectors, when vibrated, shall not display any resonance at frequencies less than 300 Hz. An anti-decoupling device shall be provided to maintain complete coupling. A solid red mating indicator band, uniform in color, shall be located on the receptacle so as to be visible when unmated and to be fully covered when completely mated. The band shall remain permanent after exposure to all tests specified in table XV herein.

3.4.6.2.3 Locking, series IV. Complete coupling shall be accomplished by rotating the coupling ring approximately 90°. The coupling ring shall incorporate a positive detent action at both the ready-to-mate and the mated positions providing both an audible and tactile indication of complete mating. A solid red mating indicator band, uniform in color, shall be located on the plug so as to be fully visible when the coupling ring is in the ready-to-mate position, and fully covered when the coupling ring is in the completely mated position. Coverage of the red band during mating without the action of the audible and tactile indicators constitutes an unmated connector. The band shall remain permanent after exposure to all tests specified in table XV herein.

3.4.6.3 Polarization of connector shells. Polarization of connector shells shall be accomplished by means of integral keys and suitable matching keyways on the counterpart. Polarization shall be accomplished before initial engagement of the coupling ring. During axial engagement, pins shall not touch sockets or the insert face until polarization has been achieved.

3.4.6.3.1 Alternate keying /rotation positions. Shells shall also be supplied with the keys (or keyways) rotated from the normal position as specified on figure 5, figure 6, and figure 7. For series I and II alternate polarization positions, the main, “master” key/keyway shall rotate, while minor keys/keyways shall stay fixed. For series III and IV alternate polarizations, the main, “master” key/keyway stays fixed, while the minor key/keyways rotate.

3.4.6.4 Lubrication. Bayonet coupling ramps, spring washers, the breech mechanism on series IV, and the internal coupling ring threads of series III connectors may be coated during the manufacturing process with a suitable lubricant. Lubricants shall be non-flaking and galvanically compatible, and shall not migrate into threaded areas. Rear accessory threads of all connectors and receptacle coupling areas shall not be lubricated.

Downloaded from http://www.everyspec.com

3.4.6.5 Pin-to-pin mating prevention. Applicable to series I, III and IV.

3.4.6.5.1 Series I and III. Series I and III connectors shall be designed such that pin-to-pin contact (electrical or physical) is not possible in the event that a plug with pin contacts is inadvertently mated with a receptacle with pin contacts.

3.4.6.5.2 Series IV. Series IV connectors shall be provided with key and keyway widths arranged so as to prevent a plug with pin contacts from being mated with a receptacle with pin contacts.

3.4.7 Cavity fill. Environment resisting classes only. If the rear grommet design does not allow for intimate contact between it and the complete inner perimeter of the shell, any resulting cavity between the insert and the shell shall be filled with RTV silicone conforming to MIL-A-46146, or equivalent. The silicone shall adhere to both the shell and the grommet.

3.5 Interchangeability. All connectors having the same Part or Identifying Number (PIN) shall be completely interchangeable with each other with respect to installation and performance.

3.6 Maintenance aging. Not applicable to hermetic connectors. When tested as specified in 4.5.2, the contact installing and removal forces shall not exceed the requirements in table V, and shall sustain no damage detrimental to the operation of the connector and shall pass all subsequent test requirements.

TABLE V. Installing and removal forces.

Contact size (mating end)	Wire barrel size	Installing and removal forces (maximum)	
		Pounds	Newtons
23	22	10	44
22	22D	10	44
22	22M 1/	10	44
22	22 1/	10	44
20	20	20	89
16	16	20	89
12	12	30	133
10	10	35	156
8 (twinax or coax)	N/A	35	156

1/ Inactive for new design.

3.7 Thermal shock. Hermetic connectors only. When tested as specified in 4.5.3, there shall be no damage detrimental to the operation of the connector.

3.8 Temperature cycling. All classes except hermetics. When tested as specified in 4.5.4, there shall be no blistering, peeling or separation of plating or other damage detrimental to the operation of the connector.

3.9 Plating adhesion. Applicable to classes J and M only. When tested as specified in 4.5.5, there shall be no blistering, peeling, flaking or separation of plating or other damage detrimental to the operation of the connector.

3.10 Air leakage. Hermetic connectors only. When tested as specified in 4.5.6, there shall be no evidence of leakage in excess of .01 micron ft^3/h (1E-7 cm^3/s).

Downloaded from http://www.everyspec.com

3.11 Coupling and uncoupling torque. When tested as specified in 4.5.7, the coupling torque for mating and the uncoupling torque for unmating of counterpart plugs and receptacles mating of connectors to and from protective covers, and mating plugs to and from dummy stowage receptacles, shall meet the requirements in table VI. For series IV connectors with spring fingers, the axial mating force prior to the coupling torque during engagement, and following the torque upon disengagement, shall be as specified in table VII.

TABLE VI. Coupling and uncoupling torque.

Shell size	Maximum engagement and disengagement		Minimum disengagement	
	Pound inch	Newton meters	Pound inch	Newton meters
8	8	0.9	2	0.2
9	8	0.9	2	0.2
10	12	1.4	2	0.2
11	12	1.4	2	0.2
12	16	1.8	2	0.2
13	16	1.8	2	0.2
14	20	2.3	4	0.4
15	20	2.3	3	0.3
16	24	2.7	4	0.4
17	24	2.7	3	0.3
18	28	3.2	5	0.6
19	28	3.2	3	0.3
20	32	3.6	6	0.7
21	32	3.6	5	0.6
22	36	4.1	7	0.8
23	36	4.1	5	0.6
24	36	4.1	7	0.8
25	40	4.6	5	0.6

TABLE VII. Shell spring finger forces.

Shell size	Axial force for series I, II, and III				Axial force for series IV			
	Maximum		Minimum		Maximum		Minimum	
	Pounds	Newtons	Pounds	Newtons	Pounds	Newtons	Pounds	Newtons
8/9	25	111	0.5	2	-	-	-	-
10/11	25	111	0.5	2	5	22.3	0.3	1.3
12/13	30	133	0.5	2	5	22.3	0.3	1.3
14/15	30	133	0.5	2	6	26.7	0.4	1.8
16/17	35	156	0.5	2	7	31.1	0.4	1.8
18/19	35	156	0.5	2	8	35.6	0.5	2.2
20/21	35	156	0.5	2	9	40.0	0.5	2.2
22/23	35	156	0.5	2	10	44.5	0.5	2.2
24/25	35	156	0.5	2	10	44.5	0.5	2.2

Downloaded from http://www.everyspec.com

3.12 Durability. Not applicable to lanyard release plugs. When tested as specified in 4.5.8, the connectors shall show no defects detrimental to the operation of the connectors and shall meet the subsequent test requirements (see 4.3.3).

3.13 Altitude immersion. All classes except hermetics, qualification only. When tested as specified in 4.5.9, the mated connector pair shall have a minimum insulation resistance as specified in 3.14.1 and shall have a minimum dielectric withstanding voltage as specified in 3.15.

3.14 Insulation resistance.

3.14.1 Insulation resistance at ambient temperature. When tested as specified in 4.5.10.1, the insulation resistance between any pair of contacts and between any contact and the shell shall be greater than 5,000 megohms. Insulation resistance after altitude immersion shall be 1,000 megohms minimum. Insulation resistance after humidity shall be 100 megohms minimum.

3.14.2 Insulation resistance at elevated temperature. When tested as specified in 4.5.10.2, the insulation resistance between any pair of contacts and between any contact and the shell shall be greater than 1,000 megohms for environment resisting class connectors. For hermetically sealed connectors, the insulation resistance between any pair of contacts and between any contact and the shell shall be greater than 200 megohms.

3.15 Dielectric withstanding voltage. When tested as specified in 4.5.11.1 or 4.5.11.2, the maximum leakage current shall be 2 milliamperes, and there shall be no evidence of electric breakdown or flashover.

3.16 Insert retention. When tested as specified in 4.5.12, unmated connectors shall retain their inserts in their proper location in the shell, and there shall be no evidence of cracking, breaking, separation from the shell, or loosening of parts.

3.17 Salt spray (corrosion). When tested as specified in 4.5.13, unmated connectors shall show no lifting of plating or exposure of basis material under three power (3X) magnification which adversely affects performance.

3.17.1 Salt spray (corrosion), initial qualification of class J and M (composites), When tested as specified in 4.5.13, unmated connectors shall show no lifting of plating or exposure of basis material under three power (3X) magnification which adversely affects performance. Connectors shall be examined after 500 hours salt spray for corrosion or exposure of underplate or basis material (inspection method optional), then returned to the salt spray chamber for the remaining required hours.

3.18 Contact resistance.

3.18.1 Contact resistance, series III, crimp contacts only. When tested as specified in 4.5.14.1, the contacts shall meet the requirements specified herein.

3.18.2 Contact resistance, hermetic connectors. When tested as specified in 4.5.14.2, contacts in the mated condition shall meet the contact resistance requirements in table VIII. Appropriate compensation may be made for resistance in the measured value, which is due to an additional length of wire included in the measurement.

Downloaded from http://www.everyspec.com

TABLE VIII. Contact resistance.

Class	Contact size	Wire size	Test amperes	Millivolt drop maximum	
				Initial	After conditioning (see table XIII)
H, N and Y	12	12	17	85	100
	16	16	10	85	100
	20	20	5	60	75
	22D	22	3	85	95
	23-22	22	3	85	95

3.19 Electrical engagement. When tested as specified in 4.5.15, wired, mated connectors shall provide a minimum of .034 inch (0.86 mm) electrical engagement for series I and II, and .050 inch (1.27 mm) for series III and IV.

3.20 External bending moment. When tested as specified in 4.5.16, connectors shall show no evidence of damage detrimental to their normal operation, and there shall be any interruption of electrical continuity.

3.21 Bayonet coupling pin strength. Applicable to series I and II only. When tested as specified in 4.5.17, bayonet coupling pins shall withstand a load of 50 +5/-0 pounds without displacement or perceptible loosening of coupling pins.

3.22 Gauge location. Using test gauges conforming to the requirements on figure 16, figure 17, figure 18, and figure 19, the axial location of contacts shall be measured as specified in 4.5.18. Gauge location measurements shall fall within the range specified on figure 1, figure 2, figure 3, and figure 4.

3.23 Gauge retention. When tested as specified in 4.5.19, the test gauges conforming to the dimensions specified on figures 16, 20, and 21 shall be retained in the contact cavities of crimp contact connectors and the axial displacement of the test gauges while under load shall not exceed .012 inch (0.30 mm).

3.24 Contact retention. When tested as specified in 4.5.20, the axial displacement of the contact shall not exceed .012 inch (0.30 mm). No damage to contacts or inserts shall result.

3.25 Altitude-low temperature. When tested as specified in 4.5.21, the connectors shall meet the requirements of dielectric withstanding voltage at sea level specified in 3.15 and insulation resistance at ambient temperature specified in 3.14.1.

3.26 Accessory thread strength. When tested as specified in 4.5.22, the accessory threads and portion of the connector that accepts cable clamps and "J" adapters shall be capable of withstanding the torque listed in table IX.

Downloaded from http://www.everyspec.com

TABLE IX. Accessory thread strength. 1/

Shell size	Accessory thread torque			Shell size	Accessory thread torque		
	Series II	Series I	Series III and IV		Series II	Series I	Series III and IV
	Inch-pounds	Inch-pounds	Newton-meters		Inch-pounds	Inch-pounds	Newton-meters
8	50 ± 5			17		200 ± 20	22.6 ± 2.3
9		100 ± 10	11.3 ± 1.1	18	50 ± 5		
10	50 ± 5			19		200 ± 20	22.6 ± 2.3
11		100 ± 10	11.3 ± 1.1	20	100 ± 10		
12	50 ± 5			21		250 ± 25	28.3 ± 2.8
13		150 ± 15	17.0 ± 1.7	22	100 ± 10		
14	50 ± 5			23		250 ± 25	28.3 ± 2.8
15		150 ± 15	17.0 ± 1.7	24	100 ± 10		
16	50 ± 5			25		250 ± 25	28.3 ± 2.8

1/ These values are for qualification testing only.

3.27 Vibration. When tested as specified in 4.5.23, there shall be no electrical discontinuity and there shall be no disengagement of the mated connectors, backing off of the coupling mechanism, evidence of cracking, breaking, or loosening of parts.

3.28 Shock. When tested as specified in 4.5.24, there shall be no electrical discontinuity and there shall be no disengagement of the mated connectors, evidence of cracking, breaking, or loosening of parts.

3.29 Shell-to-shell conductivity. Not applicable to class C and finish C. When tested as specified in 4.5.25, probes shall not puncture or otherwise damage the connector finish and the maximum measured initial potential drop across assemblies shall be as follows.

a. Series I and II with spring fingers:

(1) Finishes A, B, T, U and Z: 2.5 millivolts.
(2) Stainless steel (or a mated pair that includes a stainless steel mating connector): 50.0 millivolts.
(3) Finishes F, L, N and R: 1.0 millivolt.

b. Series II and IV without spring fingers: 200.0 millivolts.

c. Series III and IV with spring fingers:

(1) Classes T, W and Z: 2.5 millivolts.
(2) Classes F, G, L, N, R and S: 1.0 millivolt.
(3) Classes H, K, or Y (or a mated pair that includes a class H, K or Y mating connector): 10.0 millivolts.
(4) Classes J and M: 3.0 millivolts.

After conditioning (see 6.4), the maximum measured shell-to-shell conductivity values may increase up to 100 percent.

Downloaded from http://www.everyspec.com

3.29.1 Braid shield braid-to-shell conductivity. Applicable to series III only, all classes and finishes. When tested as specified in 4.5.25.1, probes shall not puncture or otherwise damage the connector finish. In addition, the maximum measured initial potential drop across mated assemblies shall be as follows.

I

(1) Classes T, W and Z: 5.0 millivolts.
(2) Classes F, G, L, N, R and S: 3.5 millivolts.
(3) Classes H, K, or Y (or a mated pair that includes a hermetic mating connector): 15.0 millivolts.
(4) Classes J and M: 6.0 millivolts.

After conditioning (see 6.4), the maximum measured braid shield braid-to-shell conductivity values may increase up to 100 percent.

3.30 Humidity. When tested as specified in 4.5.26, wired, mated connectors shall show no deterioration which will adversely affect performance of the connector. During the final cycle, while at high humidity and room temperature, insulation resistance shall be 100 megohms or greater.

3.31 Shell spring finger forces. When tested as specified in 4.5.27, the forces necessary to engage and separate EMI plugs with receptacle shells shall be within the values specified table VII.

3.32 EMI shielding. Not applicable to class C and finish C. When tested as specified in 4.5.28, the EMI shielding capabilities of mated shells with spring fingers shall not be less than that specified in table X at the specified frequencies.

TABLE X. EMI shielding effectiveness.

Frequency MHz	Leakage attenuation (dB) minimum				
	Series II	Series III and IV			Series I
	Finishes B, F, N, R, T and Z	Classes H, K, and Y	Classes F, G, L, N, M, R and S	Classes J, T, W, X and Z	Finishes B, F, N, R, T and Z
100	65	80	90	90	90
200	60	75	88	88	88
300	55	73	88	88	88
400	55	71	87	87	87
800	45	66	85	85	85
1,000	45	65	85	85	85
1,500	---	59	76	69	69
2,000	---	55	70	65	65
3,000	---	52	69	61	61
4,000	---	50	68	58	58
6,000	---	48	66	55	55
10,000	---	45	65	50	50

3.33 Ozone exposure. When tested as specified in 4.5.29, connectors shall show no evidence of cracking of dielectric material or other damage due to ozone exposure that will adversely affect performance.

3.34 Fluid immersion. Applicable to initial qualification only. When tested as specified in 4.5.30, connectors shall meet the requirements for coupling torque (see 3.11) and dielectric withstanding voltage (see 3.15).

Downloaded from http://www.everyspec.com

3.34.1 Retention system fluid immersion. When tested as specified in 4.5.30.1, insert assemblies shall meet requirements of contact retention (see 3.24). Effects of the fluids on resilient sealing members shall not be a consideration of this test.

3.35 Pin contact stability. When tested as specified in 4.5.31, the total displacement of a reference point on the contact tip end shall not exceed the amount shown in table XI.

3.36 Contact walkout. When tested as specified in 4.5.32, contacts shall not become dislodged from their normal position.

3.37 Installing and removal tool abuse. Applicable to initial qualification only. When tested as specified in 4.5.33, there shall be no evidence of damage to the contacts, the connector insert, or the contact retaining mechanism.

3.38 High temperature exposure.

3.38.1 High temperature exposure with contact loading. When tested as specified in 4.5.34.1, contacts shall maintain their specified locations as shown on figures 1, 2, 3, and 4 and there shall be no electrical discontinuity.

3.38.2 High temperature exposure. Applicable to series III, except hermetics. When tested as specified in 4.5.34.2 for 1,000 hours, connectors shall perform satisfactorily and pass succeeding tests in the qualification test sequence.

TABLE XI. Pin contact stability.

Contact size (mating end)	Wire barrel size	Total displacement		Force	
		Inch	mm	Pounds	Newtons
23	22	.025	0.64	.25	1.1
22	22D, 22 1/, and 22M 1/	.030	0.76	.28	1.2
20	20	.054	1.37	.55	2.4
16	16	.075	1.91	1.10	4.9
12	12	.075	1.91	1.10	4.9
10	10	.1	2.54	2.18	9.7
8 twinax or coax	N/A	.1	2.54	2.18	9.7

1/ For contacts with mating end size 22, only 22-22D is active for new design. 22-22 and 22-22M are inactive for new design.

3.39 Electrolytic erosion. Applicable to series III and IV only. When tested as specified in 4.5.35, pin contacts shall show no exposure of base metal due to electrolytic erosion. Corrosion deposits shall not be considered as defects.

3.40 Firewall. Applicable to classes K and S only. Mated connectors shall prevent passing of a flame through the connector for at least 20 minutes when tested as specified in 4.5.36. During this period there shall be no flame from outgassing or other causes on the end of the connector protected by the firewall. When the specified dc current is applied, there shall be no break in electrical continuity for the first 5 minutes of the test. When ac current is applied during the sixth minute of the test, there shall be no leakage current equal to or greater than 2 amperes.

Downloaded from http://www.everyspec.com

3.41 Contact plating thickness. Applicable to hermetic connectors only. When tested as specified in 4.5.37, the plating thickness of contacts used in hermetic connectors shall be in accordance with the plating thicknesses specified in 3.3.6.1.

3.42 Contact engagement and separating force. Applicable to hermetic connectors with sockets only. When tested as specified in 4.5.38, contact engagement and separating forces shall be within the limits specified in SAE-AS39029.

3.43 Resistance to test probe damage. Applicable to hermetic connectors with sockets only. When tested as specified in 4.5.39, contacts shall withstand the bending moment and depth of test probe insertion without evidence of damage that would interfere with the mechanical or electrical performance.

3.44 Ice resistance. Applicable to series I, III and IV only. When tested as specified in 4.5.40, connectors shall pass succeeding tests in the qualification table. When tested in accordance with 4.5.7, uncoupling and recoupling torque shall not exceed the values specified in table VI by more than 25 percent.

3.45 Dust or fine sand. Applicable to series I, III and IV only. When tested as specified in 4.5.41, connectors shall pass succeeding tests in the qualification table. When tested as specified in 4.5.7, uncoupling and recoupling torque shall not exceed the values specified in table VI by more than 25 percent.

3.46 Thermal vacuum outgassing. Applicable to space grade classes G and H (see 6.4) and to initial qualification only. All nonmetallic materials used in the finished connector shall not release greater than 1.0 percent total mass loss (TML) and 0.1 percent collected volatile condensable material (CVCM) when tested as specified in 4.5.42.

3.47 Hydrolytic stability. Applicable to classes J and M and for initial qualification only. When tested as specified in 4.5.43, the connector shall be without defects detrimental to mechanical performance. There shall be no increase in the connector weight greater than 0.75 percent. When subjected to an overtorque at 150 percent of those values specified in table VI, there shall be no evidence of cracking, breaking, or loosening of parts.

3.48 Cavity leakage. When tested as specified in 4.5.44, there shall be no air leakage between contact cavities.

3.49 Impact. Applicable to classes J and M only. When connector plugs assembled to SAE-AS85049 straight strain relief clamps are tested as specified in 4.5.45, there shall be no breaking or cracking of inserts or shells. Also, there shall be no bending of contacts nor any damage which would prevent the connector from mating or unmating.

3.50 Insert bond strength. When tested as specified in 4.5.46, there shall be no visible separation or cracks at the bond joint while an axial load is applied.

3.51 Resistance to indirect lightning strike. Series III only, all classes. When tested as specified in 4.5.47, wired and mated connectors shall meet braid shield braid-to-shell conductivity as specified in 4.5.25.1, coupling and uncoupling torque as specified in 4.5.7, insulation resistance at ambient temperature as specified in 4.5.10.1 and dielectric withstanding voltage at sea level as specified in 4.5.11.1. Connectors shall show no damage or degradation in the finish or base material that would affect subsequent use. Damage or hardening of elastomeric sealing members affecting sealing shall be considered a failure.

Downloaded from http://www.everyspec.com

3.52 Marking. Connectors and accessories shall be permanently marked with the PIN, date code, and the manufacturer's identification marking, as well as the assembly plant identification marking, when applicable. The lot number (also called "lot/date code") shall be marked in accordance with MIL-STD-1285. In addition, the part shall be marked with the "JAN" or "J" marking (see 3.52.2). The manufacturer's identification marking shall include either the manufacturer name or the five-digit Commercial or Government Entity number (CAGE code), and may also be identified by a unique identifier, such as a trademark, a symbol, a mint mark, or identification letters. The manufacturer's name, if used, may be abbreviated. If the manufacturer has more than one manufacturing facility, then the CAGE code of the product line shall be included on the part. If products are assembled by a qualified assembly plant, then the identification marking shall also include the assembly plant's identification marking. The trademark shall be as specified in SAE-AIR1351 or shall be that which has been provided to the qualifying activity. Stamping shall be in accordance with MIL-STD-1285 where space permits. Metal stamping shall be accomplished before plating. A single digit shell size and/or insert arrangement shall be marked with a single digit (example: shell size 8 shall be marked "8", not "08"). For PIN examples, see 1.3.a (series I and II) and 1.3.b (series III and IV).

3.52.1 Contact location identification. Contact locations shall be identified as specified on the applicable military standard. All positions shall be identified on the front and rear faces of the insert except where space limitations make this impracticable. Location of contact identifying characters shall be in close proximity to the holes but need not be placed exactly where specified on the standard. The preferred color of the contact identifying character is white. When the background is a color against which white is difficult to distinguish, a color shall be chosen for which the identifying character can be easily distinguished. Underscoring of lower case contact cavity identifiers shall be in accordance with MIL-STD-1560, but are optional for insert arrangements for which no underscoring is indicated, provided that the insert pattern can be easily determined and legibility is not impaired.

3.52.2 JAN and J marking. The United States Government has adopted and is exercising legitimate control over the certification marks "JAN" and "J", respectively, to indicate that items so marked or identified are manufactured to, and meet all the requirements of specifications. Accordingly, items acquired to, and meeting all of the criteria specified herein and in applicable specifications, shall bear the certification mark "JAN" except that items too small to bear the certification mark "JAN" shall bear the letter "J". The "JAN" or "J" shall be placed immediately before the part number except that if such location would place a hardship on the manufacturer in connection with such marking, the "JAN" or "J" may be located on the first line above or below the part number. Items furnished under contracts or orders which either permit or require deviation from the conditions or requirements specified herein or in applicable specifications shall not bear "JAN" or "J". In the event an item fails to meet the requirements of this specification and the applicable specification sheets or associated detail specifications, the manufacturer shall remove completely the military part number and the "JAN" or the "J" from the sample tested and also from all items represented by the sample. The "JAN" or "J" certification mark shall not be used on products acquired to contractor drawings or specification. The United States Government has obtained Certificate of Registration Number 504,860 for the certification mark "JAN" and Registration Number 2,577,735 for the certification mark "J".

Note: The "JAN" or "J" is not part of the PIN but indicates a certification.

3.53 Workmanship. The connector shall be fabricated in a manner such that the criteria for appearance, fit and adherence to specified tolerances are observed. Particular attention shall be given to neatness and thoroughness of marking parts, plating, welding, soldering, riveting, staking, and bonding. The visual examination under three power (3X) magnification shall include examination of each retention cavity for molding discrepancies, retention features, and excessive adhesive. The connectors shall be free from crazing, cracks, voids, pimples, chips, blisters, pinholes, sharp cutting edges, burrs, and other defects that will adversely affect life, serviceability, or appearance.

Downloaded from http://www.everyspec.com

3.54 Change effectivity. Unless otherwise specified by the preparing activity and/or the qualifying activity, all changes from the previous revision of MIL-DTL-38999 shall become effective within 90 days of the date of publication of the latest revision. If unable to implement changes within the 90 day time period, additional time shall be requested from the qualifying activity. Manufacturers that are QPL-listed and have concerns regarding possible changes to retention reporting requirements should contact the qualifying activity for clarification.

3.55 Disposition of stock. If connectors and accessories produced to the previous revision continue to meet the requirements of this specification, then products manufactured in accordance with the previous revision may continue to be shipped from stock for an indefinite period. If the qualified products meet the requirements of the previous revision, but do not meet the requirements of the current revision, then the manufacturer and their selling agents or distributors have a period of 18 months from the date of the latest revision to purge or ship all inventory, unless otherwise coordinated with, and authorized by, the qualifying activity. Revision changes to connector marking requirements, such as changes and / or additions of tracer markings to the grommet or connector mating face, do not impact form, fit or function, Products produced in accordance with previous revisions with the above-referenced types of changes that do not impact form, fit or function, may be sold until stocks are depleted.

4. VERIFICATION

4.1 Classification of inspection. The examination and testing of connectors shall be classified as follows:

a. Qualification inspection (see 4.3).
b. Conformance inspection (see 4.4).

4.2 Inspection conditions. Unless otherwise specified herein, all inspections shall be performed in accordance with the test conditions specified in the "GENERAL REQUIREMENTS" of EIA-364.

4.2.1 Test equipment and inspection facilities. Test and measuring equipment and inspection facilities of sufficient accuracy, quality and quantity to permit performance of the required inspection shall be established and maintained by the contractor. The establishment and maintenance of a calibration system to control the accuracy of the measuring and test equipment (i.e., industry standard, military standard) shall be required.

4.2.1.1 QPL system. The manufacturer shall establish and maintain a system to meet the requirements of MIL-STD-790 and the requirements herein (see 3.2.1). Evidence of such compliance shall be verified by the qualifying activity as a prerequisite for qualification and retention of qualification. Assembly plants shall be approved by the qualifying activity and listed on the applicable Qualified Products List. The qualified connector manufacturer shall certify that the assembly plant is approved for the distribution of the manufacturer's parts. Assembly plants shall use only piece parts (i.e. subcomponents such as connector shells and inserts) produced by the qualified manufacturer. No incoming inspection other than visual examination is required of certified piece parts obtained from the qualified manufacturer, except when there is cause for rejection. Assemblies produced at the assembly plant shall be subjected to inspection to ensure that the assembly process conforms with that established at the qualified manufacturing plant. Quality control requirements, including Government inspection surveillance, shall be the same as required for the qualified connector manufacturer.

4.2.2 Fungus resistance certification. Certification to method 508 of MIL-STD-810 is required (see 3.3.3).

Downloaded from http://www.everyspec.com

4.3 Qualification inspection. Qualification inspection shall be performed at a laboratory acceptable to the Government (see 6.3) on sample units produced with equipment and procedures normally used in production. Qualification approval may be granted upon successful completion of the inspections and tests of 4.3.3 conducted on samples of 4.3.1; such approval to include classes, finishes, shell configurations, and insert arrangements other than those actually tested, providing that the capability to manufacture these parts is demonstrated by providing exhibit samples or equivalent listing. Qualification of class K connectors also qualifies class S connectors providing class S connectors satisfactorily pass salt spray and group 4 tests. Qualification of series I or II, class H, will qualify connectors for series I or II, class Y, for group 5 and group 11. Qualification of series III or IV, class H, will qualify connectors for series III or IV, class Y, for group 5 and group 11. Qualification of series I and II, class T connectors, also qualifies series I and II, classes P and E connectors. Qualification of a new plating material or other specified characteristic on a connector also qualifies the same characteristic by similarity of a product with lower performance requirements, such as protective caps and covers or dummy stowage receptacles. However, qualification of a specified characteristic on a cap, cover or dummy stowage receptacle shall not qualify a connector with the same characteristic. For vibration testing (4.5.23), qualification of a higher performance connector, rated at 200°C, will qualify a lower performance connector produced with the same material and rated at 175°C.

4.3.1 Sample size. The following test samples, for each series manufactured by normal production methods, shall be provided. Tested and untested connectors, accessories and materials may be required at no cost to the Government for qualification verification by the responsible qualification activity (see 6.3).

a. For groups 1 and 2, two mating pairs of series I, II, III, and IV straight plugs and wall mounting receptacle of each of the nine shell sizes. The nine mated pairs, representing each shell size, shall consist of the following service rating types: One shell size shall be service N, two shall be service M, three shall be service I, and three shall be service II. Each arrangement in a given shell size shall be the most dense contact arrangement for that particular service rating. Half the samples of each shell size shall have pin contacts in the receptacle and socket contacts in the plug. The other samples shall have socket contacts in the receptacle and pin contacts in the plug. Strain relief clamps, if required to perform testing on qualification samples, shall be in accordance with SAE-AS85049.

   Note: For limited qualification of service types, the manufacturer shall coordinate with the qualifying activity to determine the sample quantities required to fully represent that manufacturer's qualified product, for a total of nine mated pairs. For example, if the manufacturer does not seek qualification to produce service rating N connectors, then nine mated pairs, representing each shell size, shall consist of the following service types, three shell sizes shall be service M, three shall be service I, and three shall be service II.

b. For groups 1 and 3, two mating pairs, hermetic jam nut receptacle and straight plug, of each of the nine shell sizes. Three shell sizes shall be service M, three shall be service I, and three shall be service II. Each arrangement in a given shell size shall be the most dense contact arrangement for that particular service rating. One sample of each shell size shall have pin contacts in the receptacle and socket contacts in the plug. The other sample shall have socket contacts in the receptacle and pin contacts in the plug. Contractors seeking qualification of one style only in hermetics shall provide both jam nut receptacles in that style with mating counterparts.

c. For group 4, one straight plug with spring fingers and counterpart wall mounting receptacle of small, medium, and large shell sizes with applicable EMI backshells.

d. For group 4, one wall mounting receptacle with applicable conductive finish in small, medium, and large shell sizes, less coupling pins and inserts. These connectors must intermate with samples provided under 4.3.1c.

e. For group 5, ten mated pairs, straight plugs and wall mounting receptacles, of a medium shell size, in any representative insert and shell size arrangement.

Downloaded from http://www.everyspec.com

f. For group 6, ten straight plugs and wall mounting receptacles of various representative shell sizes and insert arrangements.

g. For group 7, sufficient, mating connectors, plugs, and wall mounting receptacles, in representative shell sizes, to provide a minimum of 21 contact cavities of each applicable contact size.

h. For group 8, hermetic receptacles, 10 uninstalled pin contacts in each contact size shall be provided for contact plating thickness testing only. In addition, sufficient hermetic receptacles shall be provided to yield the following quantities of socket contacts:

Size	Quantity
23-22	65
22D	65
20, 16	50
12	35

i. For group 9, for each shell size, one mating pair of series II and one mating pair of series I, III, and IV, will be supplied with environmental backshells in accordance with SAE-AS85049 category 2B. Connectors shall be supplied in maximum density contact arrangements with pin contacts installed in the receptacles.

j. For group 10, one mating pair of classes K and S receptacle and classes K and S straight plug of each of the nine shell sizes. Three shell sizes shall be service M, three shall be service I, and three shall be service II. Each arrangement in a given shell size shall be the most dense contact arrangement for that particular service rating. All samples shall be provided with applicable SAE-AS85049 straight strain relief clamps.

k. For group 11, one mating pair of series I, III, and IV straight plug and receptacle of each of the nine shell sizes. Each arrangement in a given shell size shall be the most dense contact arrangement for that particular service rating.

l. For group 12, two bonded insert grommet assemblies and two bonded insert interface seal assemblies which have not been assembled into the connector shell shall be tested. The assemblies shall be of the size and contact arrangement for which qualification is to be conducted (Sample size required for thermal vacuum outgassing test shall be as specified in ASTM E595).

m. For group 13, one mating pair of unplated class J or M connectors (less inserts) in each shell size range (small, medium and large).

n. For group 14, three mating pairs of series III straight plugs and receptacles in shell sizes 9, 15, and 21 (nine mating pairs total) in each class for which qualification is desired shall be tested. Each mating pair of connectors shall be provided with an SAE-AS85049 braidsock strain relief as specified in EIA/ECA-364-75. (Note: An SAE-AS85049/103 strain relief is recommended).

4.3.1.1 Sample size (limited qualification). Manufacturers that do not intend to qualify all nine shell sizes in all series or all contact sizes shall provide the following test samples instead of those specified in 4.3.1a and 4.3.1b: Four mating pairs of each shell for each series or contact size to be qualified. The maximum number of connectors that will be tested is thirty-six. Future qualification of additional shell or contact sizes will require qualification as determined by the qualifying activity.

Downloaded from http://www.everyspec.com

4.3.2 Preparation of samples. Except as otherwise specified for shielded contacts, wiring of crimp-type contacts shall be accomplished using tools conforming to MIL-DTL-22520, class I. The length of stripped portion of conductor shall be at least long enough to reach the bottom of the crimp barrel, but shall not be so long that more than .031 inch (0.79 mm) of conductor is exposed at end of barrel when conductor end touches bottom of barrel. Test samples shall be coupled to the maximum torque value specified in table VI. An alternate sample preparation may be used with the approval of the qualifying activity.

a. For groups 1 and 2, samples provided under 4.3.1a shall be wired with wire having a smooth extruded outer jacket of waterproof construction. One sample of each shell size for series II, and two samples of each shell size for series I, III, and IV, shall utilize maximum diameter wire and the remaining samples shall utilize minimum diameter wire. See table XII for example of wires that can be used to accomplish the required minimum and maximum diameter. Two cavities of each sample provided shall contain unwired contacts and sealing plugs in accordance with MS27488, SAE-AS85049/80 or SAE-AS85049/81, as applicable. Connectors with less than four contacts of a given contact size will not have sealing plugs installed for that contact size. Box mount connectors may be potted at any convenient stage in the test prior to altitude immersion in group 1 and humidity in group 2.

b. For groups 1 and 3, samples provided under 4.3.1b shall be wired with the wire size specified in table XII and potted at any convenient stage in the sequence prior to vibration. Examples of wires that can be used are SAE-AS22759/9 or MIL-W-81381/7.

c. For group 4, samples provided under 4.3.1e and 4.3.1k shall be wired with wire of nominal gauge, except size 22 contacts shall be wired with 24 gauge wire. Examples of wires that can be used are SAE-AS22759/9 or MIL-W-81381/7

d. For group 4, samples provided under 4.3.1g shall be wired with wire of nominal gauge, except size 22 contacts shall be wired with 24 gauge wire. Examples of wires that can be used are SAE-AS22759/9 or MIL-W-81381/7

e. For group 5, samples provided under 4.3.1i, all series II samples, and one each size series I, III, and IV shall be wired with wire of nominal gauge. Examples of wires that can be used are SAE-AS22759/9 or MIL-W-81381/7. When hermetic receptacles are required, they shall be wired with wires of nominal gauge. Examples of wires that can be used are SAE-AS22759/9 or MIL-W-81381/7.

f. For group 6, samples provided under 4.3.1j shall be wired with wire of suitable gauge. Examples of wires that can be used are MIL-DTL-25038/3. To facilitate wiring, the glass braid may be stripped back so that it is flush with the back of the grommet.

g. For group 7, receptacles provided under 4.3.1n shall be wired with wire of nominal gauge, except size 22 contacts shall be wired with 24 gauge wire. Examples of wires that can be used are SAE-AS22759/9 or MIL-W-81381/7. Connector plugs shall have contact locations populated with unwired contacts.

Downloaded from http://www.everyspec.com

TABLE XII. Test wire sizes. 1/

Contact size (mating end)	Wire barrel size	Example of wire to accomplish maximum diameter	Example of wire to accomplish minimum diameter
23	-22	M22759/9 or /20 -24 M22759/10 or /21 -24	M22759/18, /19, /32, /33 -26 M22759/44, /45, /46 -26
22	-22D, -22M 1/, 2/ and -22 1/, 2/		
20	-20	M22759/7 -20 M22759/8 -20	M22759/18, /19, /32, /33 -22 M22759/44, /45, /46 -22 M22759/11, /12, /13, /14 -24 M22759/22, /23
16	-16	M22759/3, /4, /7, or /8 -16	M22759/18, /19, /32, M22759/44, /45 -16
12	-12	M22759/7 -12 M22759/8 -12	M81381/7 or /8 -12 M81381/11 or /12
10	-10	M22759/7 -10 M22759/8 -10	M22759/11 -10
8 coax	N/A	M17/95-RG180	M17/95-RG180
8 twinax	N/A	M17/176-00002	M17/176-00002

1/ Qualified SAE-AS39029 contacts only shall be used for qualification testing.
2/ Inactive for new design.

4.3.3 Qualification tests.

a. Samples provided under 4.3.1a shall be divided into two similar groups. One group shall be subjected to the tests of group 1, table XIII, in the sequence specified. The other group shall be subjected to the tests of group 2, table XIII, in the sequence specified.

b. Samples provided under 4.3.1b shall be divided into two similar groups. One group shall be subjected to the tests of group 1, table XIII, in the sequence specified. The other group shall be subjected to the tests of group 3, table XIII, in the sequence specified.

c. Samples provided under 4.3.1c shall be subjected to the test of group 4, table XIII, in the sequence specified (except for receptacles for shell spring finger forces, 4.3.1d and 4.3.3d).

d. Samples provided under 4.3.1d shall serve as counterparts for the tests of 4.5.26 in group 4, table XIII.

e. Samples provided under 4.3.1e shall be subjected to the tests of group 5, table XIII, in the sequence specified.

f. Samples provided under 4.3.1f shall be subjected to the tests of group 6, table XIII, in the sequence specified.

g. Samples provided under 4.3.1g shall be subjected to the tests of group 7, table XIII, in the sequence specified.

h. Samples provided under 4.3.1h shall be subjected to the tests of group 8, table XIII, in the sequence specified.

Downloaded from http://www.everyspec.com

i. Samples provided under 4.3.1i shall be subjected to the tests of group 9, table XIII, in the sequence specified.

j. Samples provided under 4.3.1j shall be subjected to the tests of group 10, table XIII, in the sequence specified.

k. Samples provided under 4.3.1k shall be subjected to the tests of group 11, table XIII, in the sequence specified.

l. Samples provided under 4.3.1l shall be subjected to the tests of group 12, table XIII, in the sequence specified.

m. Samples provided under 4.3.1m shall be subjected to the tests of group 13, table XIII, in the sequence specified.

n. Samples provided under 4.3.1n shall be subjected to the tests of group 14, table XIII, in the sequence specified.

4.3.3.1 Failures. One or more failures shall be cause for refusal to grant qualification.

4.3.4 Retention of qualification. To retain qualification, the qualified manufacturer shall periodically forward reports to the Qualifying Activity (see 6.3) as follows:

a. At 12 month intervals, the qualified manufacturer shall forward a report with a summary of the results of groups A and B testing (see 4.4). The results of tests for all reworked lots shall be identified and accounted for.

b. At 24 month intervals, unless otherwise specified, the qualified manufacturer shall submit requalification, group C test reports (see 4.4.2.1), including the number and mode of failures. The summary shall include results of all qualification verification inspection testing performed during that period.

Reports shall include certification that the qualified source continues to produce qualified product under the same conditions as originally qualified (i.e., same processes, materials, design, construction, etc., including manufacturing locations), unless such changes have been authorized by the Qualifying Activity.

Note: The qualified source shall immediately notify the Qualifying Activity at any time during the reporting period when inspection data indicates failure of the qualified product to meet the requirements of the specification. If the summary of test results indicates nonconformance with the specification requirements, and corrective action acceptable to the Qualifying Activity has not been taken, then action may be taken to remove failing product from the QPL. In addition, failure to submit the report within thirty days after the end of each reporting period may result in loss of qualification for that product. In the event that no production occurred during the reporting period, the qualified manufacturer shall submit a report certifying that the company still has the capability and facilities required to produce the qualified product. If there has been no production during two consecutive reporting periods, the Qualifying Activity, at their discretion, may require the manufacturer submit a representative product of each type, class, etc., to retention testing in accordance with qualification inspection requirements.

Downloaded from http://www.everyspec.com

TABLE XIII. Qualification and group C periodic tests.

Inspection	Requirement paragraph	Test paragraph
Group 1 (all classes and finishes)		
Visual and mechanical examination	3.1, 3.3, 3.4, 3.5, 3.52 and 3.53	4.5.1
Magnetic permeability (except finish D of series I and II)	3.3.4	4.5.48
Maintenance aging (except hermetics)	3.6	4.5.2
Thermal shock (hermetics only)	3.7	4.5.3
Temperature cycling (except hermetics)	3.8	4.5.4
Air leakage (hermetics only)	3.10	4.5.6
Coupling and uncoupling torque	3.11	4.5.7
Durability	3.12	4.5.8
Attitude immersion (except hermetics) 1/	3.13	4.5.9
Insulation resistance at ambient temperature	3.14.1	4.5.10.1
Dielectric withstanding voltage at sea level	3.15	4.5.11.1
Insert retention	3.16	4.5.12
Shell-to-shell conductivity (not applicable to class C and finish C)	3.29	4.5.25
Salt spray (corrosion) (standard test applicable to series I and II finishes A, D, F, N, R, U, and series III and IV classes F, G, N only)	3.17	4.5.13.1
Coupling and uncoupling torque	3.11	4.5.7

See footnotes at end of table.

Downloaded from http://www.everyspec.com

TABLE XIII. Qualification and group C periodic tests - Continued.

Inspection	Requirement paragraph	Test paragraph
Group 1 (all classes and finishes)		
Shell-to-shell conductivity (not applicable to class C and finish C)	3.29	4.5.25
Contact resistance	3.18.2	4.5.14.2
Electrical engagement	3.19	4.5.15
External bending moment	3.20	4.5.16
Bayonet coupling pin strength (series I and II only)	3.21	4.5.17
Post test examination	3.52 and 3.53	4.5.49
Group 2 (all classes except hermetics)		
Visual and mechanical examination	3.1, 3.3, 3.4, 3.5, 3.52 and 3.53	4.5.1
Gauge location	3.22	4.5.18
Gauge retention	3.23	4.5.19
Maintenance aging	3.6	4.5.2
Contact retention	3.24	4.5.20.1
Altitude-low temperature	3.25	4.5.21
Insulation resistance at ambient temperature	3.14.1	4.5.10.1
Dielectric withstanding voltage at sea level	3.15	4.5.11.1
Temperature cycling	3.8	4.5.4
Coupling and uncoupling torque	3.11	4.5.7
Insulation resistance at elevated temperature	3.14.2	4.5.10.2
Dielectric withstanding voltage at sea level	3.15	4.5.11.1
Dielectric withstanding voltage at altitude 1/	3.15	4.5.11.2
Durability	3.12	4.5.8
Accessory thread strength	3.26	4.5.22
Contact resistance (series III only)	3.18.1	4.5.14.1
Vibration 5/	3.27	4.5.23
Contact resistance (series III only)	3.18.1	4.5.14.1
Shock	3.28	4.5.24.1
Shell-to-shell conductivity (except finish C and class C)	3.29	4.5.25
High temperature exposure (series III) 1/	3.38.2	4.5.34.2

See footnotes at end of table.

Downloaded from http://www.everyspec.com

TABLE XIII. Qualification and group C periodic tests - Continued.

Inspection	Requirement paragraph	Test paragraph
Group 2 (all classes except hermetics)		
Humidity	3.30	4.5.26
Insulation resistance at ambient temperature	3.14.1	4.5.10.1
Dielectric withstanding voltage at sea level	3.15	4.5.11.1
Contact retention	3.24	4.5.20.1
Post test examination	3.52 and 3.53	4.5.49
Group 3 (hermetic receptacles)		
Visual and mechanical examination	3.1, 3.3, 3.4, 3.5, 3.52 and 3.53	4.5.1
Thermal shock	3.7	4.5.3
Air leakage	3.10	4.5.6
Insulation resistance at elevated temperature	3.14.2	4.5.10.2
Durability	3.12	4.5.8
Coupling and uncoupling torque	3.11	4.5.7
Contact resistance	3.18.2	4.5.14.2
Vibration 5/	3.27	4.5.23
Contact resistance	3.18.2	4.5.14.2
Shock	3.28	4.5.24.1
Insulation resistance at ambient temperature	3.14.1	4.5.10.1
Dielectric withstanding voltage at sea level	3.15	4.5.11.1
Humidity	3.30	4.5.26
Insulation resistance at ambient temperature	3.14.1	4.5.10.1
Dielectric withstanding voltage at sea level	3.15	4.5.11.1
Post test examination	3.52 and 3.53	4.5.49

See footnotes at end of table.

Downloaded from http://www.everyspec.com

TABLE XIII. Qualification and group C periodic tests - Continued.

Inspection	Requirement paragraph	Test paragraph
Group 4 (shells with spring fingers)		
Visual and mechanical examination	3.1, 3.3, 3.4, 3.5, 3.52 and 3.53	4.5.1
Durability (series I, III, and IV) (except classes J and M)	3.12	4.5.8
Shell spring finger forces	3.31	4.5.27
Shell-to-shell conductivity (except finish C and class C)	3.29	4.5.25
EMI shielding (except finish C and class C)	3.32	4.5.28
Post test examination	3.52 and 3.53	4.5.49
Group 5 (dielectric)		
Visual and mechanical examination	3.1, 3.3, 3.4, 3.5, 3.52 and 3.53	4.5.1
Ozone exposure	3.33	4.5.29
Insulation resistance at ambient temperature	3.14.1	4.5.10.1
Dielectric withstanding voltage at sea level	3.15	4.5.11.1
Fluid immersion 1/	3.34	4.5.30
Dielectric withstanding voltage at sea level	3.15	4.5.11.1
Coupling and uncoupling torque	3.11	4.5.7
Post test examination	3.52 and 3.53	4.5.49
Group 6 (retention system)		
Visual and mechanical examination	3.1, 3.3, 3.4, 3.5, 3.52 and 3.53	4.5.1
Retention system fluid immersion	3.34.1	4.5.30.1
Contact retention	3.24	4.5.20
Post test examination	3.52 and 3.53	4.5.49

See footnotes at end of table.

Downloaded from http://www.everyspec.com

TABLE XIII. Qualification and group C periodic tests – Continued.

Inspection	Requirement paragraph	Test paragraph
Group 7 (retention system)		
Visual and mechanical examination	3.1, 3.3, 3.4, 3.5, 3.52 and 3.53	4.5.1
Pin contact stability	3.35	4.5.31
Contact walkout	3.36	4.5.32
Installing/removal tool abuse	3.37	4.5.33
High temperature exposure with contact loading	3.38.1	4.5.34.1
Insert retention	3.16	4.5.12
Post test examination	3.52 and 3.53	4.5.49
Group 8 (hermetic receptacles mated with crimp counterparts)		
Visual and mechanical examination	3.1, 3.3, 3.4, 3.5, 3.52 and 3.53	4.5.1
Contact resistance	3.18.2	4.5.14.2
Contact engagement and separating force	3.42	4.5.38
Resistance to probe damage	3.43	4.5.39
Contact engagement and separating force	3.42	4.5.38
Contact plating thickness (hermetic)	3.41	4.5.37
Post test examination	3.52 and 3.53	4.5.49

See footnotes at end of table.

Downloaded from http://www.everyspec.com

TABLE XIII. Qualification and group C periodic tests - Continued.

Inspection	Requirement paragraph	Test paragraph
Group 9 (series I and II – finishes B, C, E, L, N, T and Z) (series III and IV – classes C, F, G, H, J, K, L, M, N, R, S, T, U, W, Y and Z)		
Visual and mechanical examination	3.1, 3.3, 3.4, 3.5, 3.52 and 3.53	4.5.1
Shock (high impact) (series I, III, and IV only)	3.28	4.5.24.2
Dielectric withstanding voltage (at sea level)	3.15	4.5.11.1
Electrolytic erosion (series III and IV)	3.39	4.5.35
Shell-to-shell conductivity (not applicable to class C and finish C)	3.29	4.5.25
Temperature cycling (except hermetics)	3.8	4.5.4
Salt spray (corrosion) (dynamic test applicable to series I and II finishes B, C, E, L, T and Z and series III and IV classes C,H,J,K,L,M,S,T,W, Y and Z)	3.17	4.5.13.2
Coupling and uncoupling torque	3.11	4.5.7
Shell-to-shell conductivity (not applicable to class C and finish C)	3.29	4.5.25
Bayonet coupling pin strength (series I and II only)	3.21	4.5.17
Post test examination	3.52 and 3.53	4.5.49
Group 10 3/ (firewall - classes K and S)		
Visual and mechanical examination	3.1, 3.3, 3.4, 3.5, 3.52 and 3.53	4.5.1
Firewall (classes K and S connectors)	3.40	4.5.36
Post test examination	3.52 and 3.53	4.5.49

See footnotes at end of table.

Downloaded from http://www.everyspec.com

TABLE XIII. Qualification and group C periodic tests - Continued.

Inspection	Requirement paragraph	Test paragraph
Group 11 (series I, III and IV)		
Visual and mechanical examination	3.1, 3.3, 3.4, 3.5, 3.52 and 3.53	4.5.1
Ice resistance	3.44	4.5.40
Dust (fine sand)	3.45	4.5.41
Impact (classes J and M)	3.49	4.5.45
Post test examination	3.52 and 3.53	4.5.49
Group 12 (series I, II, III, and IV)		
Visual and mechanical examination	3.1, 3.3, 3.4, 3.5, 3.52 and 3.53	4.5.1
Cavity leakage 2/	3.48	4.5.44
Insert bond strength 2/	3.50	4.5.46
Thermal vacuum outgassing (classes G and H) 1/ 2/	3.46	4.5.42
Post test examination	3.52 and 3.53	4.5.49
Group 13 (classes J and M)		
Visual and mechanical examination	3.1, 3.3, 3.4, 3.5, 3.52 and 3.53	4.5.1
Hydrolytic stability (classes J and M)	3.47	4.5.43
Post test examination	3.52 and 3.53	4.5.49

See footnotes at end of table.

Downloaded from http://www.everyspec.com

TABLE XIII. Qualification and group C periodic tests – Continued.

Inspection Group 14 1/ 4/ (series III only)	Requirement paragraph	Test paragraph
Visual and mechanical examination	3.1, 3.3, 3.4, 3.5, 3.52 and 3.53	4.5.1
Coupling and uncoupling torque	3.11	4.5.7
Backshell shield braid-to-shell conductivity	3.29.1	4.5.25.1
Resistance to indirect lightning strike	3.51	4.5.47
Backshell shield braid-to-shell conductivity	3.29.1	4.5.25.1
Coupling and uncoupling torque	3.11	4.5.7
Insulation resistance	3.14.1	4.5.10.1
Dielectric withstanding voltage	3.15	4.5.11.1
Post test examination	3.52 and 3.53	4.5.49

1/ Initial qualification only, unless otherwise specified. For exceptions, see 4.4.2.1.2.

2/ Additional parts may be used.

3/ Insert arrangements using multiaxial contacts (i.e., twinax or coax contacts) shall not be used for classes K and S connectors, as they may fail the firewall test. Applicable insert arrangements include 17-2, 17-11, 19-18, 21-75, 25-7, 25-8, 25-20, 25-46 and 25-90.

4/ If the supplier's plating system changes (e.g., change to method of plating, or change in plating thicknesses of underplates and finishes), then the manufacturer shall notify the qualifying activity and submit a requalification test plan for approval.

5/ Vibration and shock testing are required for all classes during initial qualification. For periodic requalification, series III only, random vibration testing at elevated temperature (see 4.5.23.2.3) is required.

4.4 Conformance inspection.

4.4.1 Inspection of product for delivery. Inspection of product for delivery shall consist of groups A and B inspections. The documentation requirements of the applicable military or industry test procedures do not apply.

4.4.1.1 Group A inspection. Group A inspection shall consist of the inspections specified in table XIV.

4.4.1.1.1 Visual examination (group A inspection). Each connector and accessory shall be visually examined for completeness, workmanship, and identification requirements. For those assemblies that require a gasket, the condition of the gasket shall be visually examined. Gaskets missing, twisted, buckled, kinked, or damaged in any way shall be cause for rejection. Each connector (except hermetics) shall be visually inspected for the presence of filler compound in the cavity between the wire termination end of the insert and the shell.

Downloaded from http://www.everyspec.com

4.4.1.1.2 Critical examinations (group A inspection). The following dimensions and features shown on the pertinent military standard are considered critical.

a. Mating diameters H and W for series I, II, and III; LL, L and MM for series IV as specified on figures 1, 2, 3, and 7 (maximum on plugs, minimum on receptacles).
b. Key or keyway positions.
c. Contact pattern relative to datum features (hermetics only).
d. Registration of grommet and insert markings (hole pattern between the grommet and the front face of the insert).
e. Red band dimension in accordance with applicable receptacle specification sheet.

TABLE XIV. Group A inspection. 1/

Inspection	Requirement paragraph	Test paragraph
Visual inspection 2/ 3/	3.1, 3.3, 3.4, 3.5, 3.52 and 3.53	4.4.1.1.1
Critical examination 2/ 3/	3.1	4.4.1.1.2
Insulation resistance at ambient temperature 2/ 3/ 4/	3.14.1	4.5.10.1
Dielectric withstanding voltage at sea level 2/ 3/ 4/	3.15	4.5.11.1
Air leakage (hermetics only) 2/ 3/	3.10	4.5.6

1/ Contacts shipped with connectors (crimp type only) shall be qualified in accordance with SAE-AS39029.
2/ 100 percent inspection.
3/ The contractor may use in-process controls for this requirement.
4/ Test 100 percent of contacts. Points of measurement and application of voltage shall be between circuits consisting of each contact and its closest adjacent contact and between connector shell and closest contacts adjacent to the shell. Multiple circuits may be tested concurrently.

4.4.1.2 Group B inspection. Group B inspection shall consist of the inspections specified in table XV in the order shown and shall be made on sample units which have been subjected to and have passed the group A inspection.

TABLE XV. Group B inspection.

Inspection	Requirement paragraph	Test paragraph	Number of samples
Plating adhesion (classes J and M) 1/ 2/ 3/	3.9	4.5.5	As specified in table XVI
Contact engaging and separating forces (hermetic receptacles with sockets only) 1/	3.42	4.5.38	
Shell spring finger forces (plugs with spring fingers only) 1/ 2/ 3/	3.31	4.5.27	

1/ The contractor may use in-process controls for this requirement.
2/ No failures permitted.
3/ Test 5 pieces.

Downloaded from http://www.everyspec.com

4.4.1.2.1 Sampling plan (group B inspection). A sample size shall be randomly selected as specified in table XVI, except sampling for plating adhesion and shell spring finger forces shall be as specified in table XV footnote 3/. If one or more defects are found, then the lot shall be rescreened and defects removed. A new sample as specified in table XVI shall then be randomly selected. If one or more defects are found in the second sample, then the lot shall not be supplied to this specification.

TABLE XVI. Sampling plan.

Lot size	Sample size
1 to 13	100 percent
14 to 150	13 units
151 to 280	20 units
281 to 500	29 units
501 to 1,200	34 units
1,201 to 3,200	42 units

4.4.1.2.2 Lot definition (group B inspection). The production lot, as defined in MIL-STD-790, is further specified as follows:

a. A production lot consists of all connectors covered under one military specification or standard, manufactured from the specified raw materials, processed under the same specification and procedures, produced by the same type of equipment, and submitted for inspection at one time. Each production lot of assembled connectors shall be a group identified by a common manufacturing record through all significant assembly operations.

b. Common manufacturing records and traceability shall begin with machining and molding and shall include connector assembly. Traceability of connectors to specific physical/chemical test reports of incoming raw material is not required.

4.4.1.2.3 Disposition of sample units. Sample units which have completely passed group B inspection may be delivered on the contract or purchase order if the lot is accepted and the sample units are still within specified tolerances.

4.4.2 Periodic inspection. Periodic inspection shall consist of group C inspection. Except where the results of this inspection show noncompliance with the applicable requirements (see 4.4.2.1.5), delivery of products which have passed groups A and B inspections shall not be delayed pending the results of this periodic inspection.

4.4.2.1 Group C inspection (periodic tests). Periodic tests shall be performed on a 24-month basis. Random vibration at temperature (series III only) shall be performed during 24-month periodic testing, beginning with the first 24-month periodic test, but shall only be required during every alternate 24-month time period (i.e., random vibration shall be required during the first group C inspection after initial qualification, and then it shall be required every 48 months thereafter, unless otherwise required by the qualifying activity). Samples submitted to periodic tests shall have passed groups A and B inspections.

Downloaded from http://www.everyspec.com

4.4.2.1.2 Twenty-four month periodic tests. Every 24 months, mated connector pair sample units shall be selected, configured and tested as specified below (Note: At the discretion of the qualifying activity, an alternate test sequence may be performed):

a. Group 1 (all classes and finishes) and Group 2 (all classes except hermetics), test sample quantity and configuration: For each series qualified, two mating plugs and receptacles (non-hermetics) from each shell size range and having each service rating represented shall be provided. The three shell size ranges are small (sizes 8 through 13), medium (sizes 14 through 19), and large (sizes 20 through 25). One mating pair from each shell size range shall be fully wired with the applicable wire listed in table XII maximum diameter and subjected to the applicable tests in table XIII, group 1. The remaining samples shall be fully wired with the applicable wire listed in table XII minimum diameter and subjected to the applicable tests in table XIII, group 2. Random vibration at temperature (series III only, see 4.5.23.1,) shall be included in group 2 during every alternate 24-month periodic testing time period.

b. Corrosion: In addition to the Group 1 salt spray (corrosion) testing specified in 4.4.2.1.2.a, for each series qualified, two mating plugs and receptacles (non-hermetics) from each shell size range (see 4.4.2.1.2.1.a for size ranges) and having each service rating represented, shall be provided for dynamic salt spray testing in accordance with 4.5.13.2, followed by coupling torque in accordance with 4.5.7. The dynamic test is applicable to series I and II, finishes B, C, E, L, T and Z, and to series III and IV, classes C, H, J, K, L, M, S, T, W, Y and Z. Half the mated pairs from each shell size range shall be fully wired with the applicable maximum diameter wire listed in table XII, and the remaining samples shall be fully wired with the applicable minimum diameter wire listed in table XII.

c. Group 1 (all classes and finishes) and Group 3 (hermetic receptacles), test sample quantity and configuration: Two mating plugs and hermetic receptacles in each series (all classes and finishes) shall be provided. These samples shall include at least three shell sizes, small (sizes 8 through 13), medium (sizes 14 through 19), and large (sizes 20 through 25) manufactured during the period, and all three service ratings. One mating sample of each configuration shall be fully wired per 4.3.2b and subjected to the applicable tests in table XIII, group 1. The remaining samples shall be fully wired in accordance with 4.3.2 and subjected to the applicable test in table XIII, group 3.

d. Group 8 (hermetic receptacles mated with crimp counterparts) , test sample quantity and configuration: Sufficient hermetic receptacles shall be provided to furnish a minimum of 50 socket contacts of each mating end size. Mating plugs with pin contacts shall be provided to furnish mating pins. These samples shall be fully wired with wire specified in table XII and subjected to the tests in table XIII, group 8. Examples of wire that can be used are specified in SAE-AS22759 or MIL-DTL-81381.

e. Group 12 (all series), test sample quantity and configuration: Two bonded insert grommet subassemblies and two bonded insert interfacial seal subassemblies with the highest density insert arrangement for each shell size (small, medium and large, see 4.4.2.1.2 a) shall be provided. One set of each type of insert assembly shall be installed in the connector shell. Assemblies shall be subjected to the tests in table XIII, group 12, with the exception of thermal vacuum outgassing. The set of inserts assembled into shells shall be subjected to cavity-to-cavity leakage bonding integrity as specified in group 12. The set of inserts provided without shells shall be subjected to insert bond strength as specified in group 12.

f. Humidity: In addition to group 2 and group 3 humidity testing, two mating connector pairs in -35 insert arrangement of the largest shell size in regular production during that period shall be subjected to humidity in accordance with 4.5.26.

Downloaded from http://www.everyspec.com

g. High temperature: One mating pair of connectors, except hermetics, of any representative shell size and insert arrangement for each contact size qualified, shall be subjected to high temperature exposure with contact loading in accordance with 4.5.34.1, except that the time period shall be 250 hours.

4.4.2.1.3 Failures. If one or more sample units fail to pass group C inspection, the sample shall be considered to have failed and corrective action shall be taken in accordance with 4.4.2.1.5.

4.4.2.1.4 Disposition of sample units. Sample units which have been subjected to group C inspection shall not be delivered on the contract or purchase order.

4.4.2.1.5 Noncompliance. If a sample fails to pass group C inspection, the manufacturer shall take corrective action on the materials or processes or both, as warranted, and on all units of product which are to be corrected and which were manufactured with essentially the same materials and processes, and which are considered subject to the same failure. Acceptance and shipment of the product shall be discontinued until corrective action acceptable to the qualifying activity has been taken. After the corrective action has been taken, group C inspection shall be repeated on additional sample units (all inspections, or the inspection which the original sample failed, at the option of the qualifying activity). Groups A and B inspections may be reinstituted; however, final acceptance shall be withheld until the group C reinspection has shown that corrective action was successful. In the event of failure after reinspection, information concerning the failure shall be furnished to the cognizant inspection activity and the qualifying activity.

4.4.3 Failures of groups A, B or C. Lots which fail groups A, B or C and also either fail retesting or are not submitted for retesting, shall not be shipped, and the PIN and "JAN" marking shall be removed within 30 days from product produced to these lots (see 3.52.2).

4.5 Methods of inspection.

4.5.1 Visual and mechanical examination.

4.5.1.1 Connectors, accessories and piece parts. The connectors, accessories and piece parts covered by this specification shall be visually and mechanically examined to ensure conformance with the specification and the applicable military standards (see 3.1, 3.3, 3.4, 3.5, 3.52 and 3.53). The contractor may use in-process controls to satisfy these requirements.

4.5.1.2 Contacts (hermetics only). The contacts shall be visually examined for mechanical defects (see 3.1, 3.3, 3.4, 3.5, and 3.53). The contacts shall be inspected through a device having approximately three power (3X) magnification. The contractor may use in-process controls to satisfy these requirements.

4.5.1.3 Test methods. The following identified tests and methods assure connector integrity within typical operating conditions and applications. Alternate commercial industry standard test methods are allowed when determined to provide equivalent results; however when an alternate method is proposed, the manufacturer shall submit details of the alternate method to the qualifying activity for their review and approval prior to the performance of the test. The test methods described herein are proven methods and shall be the referee methods in the event of a dispute.

Downloaded from http://www.everyspec.com

4.5.2 Maintenance aging. Not applicable to hermetics, see 3.6. Connectors shall be tested in accordance with test procedure EIA-364-24. The following details shall apply:

a. Installing/removal tools shall be in accordance with MIL-I-81969/8, MIL-I-81969/14, SAE-AS81969/1 and SAE-AS81969/8.
b. A minimum of twenty (20) percent, but not less than three contacts of each connector shall be tested.
c. Fifty (50) percent of maintenance aging shall be performed with MIL-I-81969/8 tools and fifty percent with MIL-I-81969/14 tools, except for connectors with size 23 contacts, which shall use fifty percent SAE-AS81969/8 tools and fifty percent SAE-AS81969/1 tools.
d. Contact installing and removal force measurements may be made with the appropriate installing and removal tips adapted to measure installing and removal forces on the initial and final cycle of maintenance aging.
e. No lubricant shall be used during this test.

4.5.3 Thermal shock. Applicable to hermetics only, see 3.7. Unmated receptacles shall be subjected to 10 cycles of thermal shock in the following manner:

a. Step 1. The receptacle shall be suspended for 10 +1/-0 minutes in the center of a cold water bath with a volume of approximately 1 cubic foot. No dimension of the bath shall be less than 10 inches (254.0 mm). The water temperature shall not exceed + 4°C.

b. Step 2. The receptacle shall be suspended for 10 +1/-0 minutes in the center of a hot water bath with a volume of approximately 1 cubic foot. No dimension of the bath shall be less than 10 inches (254.0 mm). The water temperature shall not be less than + 90°C.

The transfer time from one bath to the other shall not exceed 5 seconds. At the end of the 10th cycle, the receptacle shall have the excess moisture shaken off and then be dried in a forced air oven at 66° ±5°C for 15 ±1 minutes.

4.5.4 Temperature cycling. Applicable to all classes except hermetics, see 3.8. Mated connectors shall be tested in accordance with test procedure EIA-364-32, test method A, test duration A. Test conditions shall be as follows, except that the duration of steps 2 and 4 shall be 2 minutes maximum. For series I and II, finishes A and U, use test condition IV (-65°C to 150°C). For series I and II, finish B, and series III and IV, classes J, P, T, W and Z, use test condition V (-65°C to 175°C). For all other finishes and classes, use test condition VI (-65°C to 200°C).

4.5.5 Plating adhesion. Applicable to classes J and M only, see 3.9. Immerse plated connector shells in canola, peanut or other similar oil. The oil shall be heated to the maximum operation temperature of the connector, see 1.3.1d. Leave the connector shells in the boiling oil for 2 minutes. Then remove the shells and within 10 seconds transfer it to an ambient temperature solvent or ice water. Let stand for 45 seconds. Then remove and examine visually for conformance to the requirements of 3.8. Optional procedure: Place connector shells into a hot oven until shells are heated to the maximum operational temperature of the connector. Once the maximum temperature is attained, the shells shell remain in the oven for an additional 2 minutes, after which they shall be removed and transferred to an ambient temperature solvent or ice water within 10 seconds. Shells shall remain in solvent or ice water for 2 minutes, then removed and examined visually for conformance to the requirements of 3.9.

4.5.6 Air leakage. Applicable to hermetics only, see 3.10. The connector shall be subjected to test procedure EIA-364-02, except the minimum period of measurement shall be 10 seconds. Testing shall be conducted at a pressure differential of 1 atmosphere across the connector.

Downloaded from http://www.everyspec.com

4.5.7 Coupling and uncoupling torque. See 3.11. Mated connectors shall be tested in accordance with test procedure EIA-364-114, except mated pairs shall be fully coupled in no less than 5 seconds, and shall be fully uncoupled in no less than 5 seconds. For qualification testing, mated connectors shall be coupled and uncoupled; the axial mating force (series IV) and the torque which must be applied to facilitate full coupling and uncoupling shall be measured and recorded. The following detail applies:

a. Full coupling: Full coupling is achieved when the red band is covered by the plug coupling ring.

4.5.8 Durability.

4.5.8.1. Durability. Not applicable to lanyard release plugs, see 3.12. The wired, assembled plugs and receptacles shall be mated and unmated 250 cycles for series II with spring fingers and lanyard release plugs, 1500 cycles for classes J and M (contacts may be changed after 500 cycles when contact styles P or S are used), and 500 cycles for all other connectors, at a rate of 300 cycles per hour maximum. The mating and unmating shall be accomplished so that the plug and receptacle are completely separated during each cycle.

4.5.8.2. Durability, lanyard release plugs. The wired, assembled plugs and receptacles shall be mated and unmated as specified in the detail specification sheets.

4.5.9 Altitude immersion. Applicable to all classes except hermetics, see 3.13. Mated connectors shall be tested in accordance with test procedure EIA-364-03. The following details shall apply:

a. All wire ends shall be located within the chamber and exposed to the chamber atmosphere but not submerged or sealed.
b. At the end of the third cycle, while the connectors are still submerged in the solution, the insulation resistance at ambient temperature shall be measured as specified in 4.5.10.1, and the dielectric withstanding voltage test shall be performed as specified in 4.5.11.1.

4.5.10 Insulation resistance.

4.5.10.1 Insulation resistance at ambient temperature. See 3.14.1. Unmated connectors shall be tested in accordance with test procedure EIA/ECA-364-21. The following details and exceptions apply:

a. For lot acceptance testing, where it is undesirable to install actual contacts in connectors, simulated contacts and special techniques may be used in performing this test.
b. The tolerance on the applied voltage shall be ±10 percent.
c. Connectors shall be mated when testing after altitude immersion, humidity and altitude-low temperature.

4.5.10.2 Insulation resistance at elevated temperature. See 3.14.2. Unmated connectors shall be tested in accordance with test procedure EIA/ECA-364-21. The following details and exceptions shall apply:

a. The tolerance on the applied voltage shall be ±10 percent.
b. Applicable elevated temperature for 30 minutes:

(1) Series I and II: Finishes A, D and U: 150°C +5°C/-0°C;
Finishes B, T, X and Z: 175°C +5°C/-0°C;
Finishes C, E, F, N, and R: 200°C +5°C/-0°C.

(2) Series III and IV: Classes J, T, W, X and Z: 175°C +5°C/-0°C;
Classes C, F, G, H, K, L, M, N, R, S, X, and Y: 200°C +5°C/-0°C.

c. Measurements shall be made while the connectors are still in the chamber at the specified temperature.

Downloaded from http://www.everyspec.com

4.5.11 Dielectric withstanding voltage. See 3.15.

4.5.11.1 Dielectric withstanding voltage at sea level. Wired, unmated connectors shall be tested in accordance with test procedure EIA-364-20, method A. Connectors shall be mated when testing after altitude immersion, humidity, and altitude-low temperature. The following details and exceptions apply:

a. The magnitude of the test voltage shall be as specified in table III (see MIL-STD-1560 for service rating of insert arrangement).
b. Fifty (50) percent of the contacts available shall be tested, but in no case shall less than six dielectric withstanding voltage readings be taken. If the number of contacts is three or less, all contacts shall be tested. The test voltage shall be applied between each wired contact, and each adjacent contact, and the shell.
c. The test voltage shall be maintained at the specified value for 2 seconds minimum.
d. For conformance testing, simulated contacts and special techniques may be used in performing this test.

4.5.11.2 Dielectric withstanding voltage at altitude. Mated connectors and unmated connector halves with pin contacts shall be tested in accordance with test procedure EIA-364-20, method A, with the following details and exceptions:

a. The magnitude of the test voltage shall be as specified in table III.
b. Fifty (50) percent of the contacts available shall be tested, but in no case shall less than six dielectric withstanding voltage readings be taken. If the number of contacts is three or less, all contacts shall be tested. The test voltage shall be applied between each wired contact and each adjacent contact and the shell.
c. The test voltage shall be maintained at the specified value for 2 seconds minimum.
d. The leads of all test circuits shall be brought out through the walls of the chamber. There shall be no wire splices inside the chamber. The wire ends of all leads shall be unsealed.
e. Only the engaging faces of hermetically sealed and box mounting receptacle connectors shall be subjected to the high altitude. The rear face shall be suitably protected.
f. The chamber shall be evacuated to each of the specified altitude pressure equivalents listed below.

Altitude	Equivalent pressure
50,000 feet	87 torr
70,000 feet	33 torr
100,000 feet	8 torr

4.5.12 Insert retention. See 3.16. Unmated connectors shall be tested in accordance with test procedure EIA-364-35 with the following details and exceptions:

a. Force to be applied: 100 ± 5 pounds per square inch with a 25 pounds minimum force.
b. Connectors may be wired.

Downloaded from http://www.everyspec.com

4.5.13 Salt spray (corrosion). See 3.17.

4.5.13.1 Standard test. Applicable to series I and II, finishes A, D, F, N, U and R and to series III and IV, classes F, G, N and R. Unmated connectors shall be tested in accordance with test procedure EIA/ECA-364-26. The following details and exceptions shall apply:

a. Test condition B (48 hours), except for series I and II, finish D which shall be tested for 24 hours.
b. Test condition A (96 hours) for classes U and R.
c. The samples shall not be mounted but shall be suspended from the top of the chamber using waxed twine or string, glass rods, or glass cord.
d. Wire ends must be protected to prevent salt migration.

4.5.13.2 Dynamic test**.** Applicable to series I and II, finishes B, C, E, L, T and Z; and to series III and IV, classes C, H, J, K, L, M, S, T, W, Y and Z. The wired, assembled plugs and receptacles shall be mated and unmated 50 cycles at a rate of 300 cycles per hour maximum. The mating and unmating shall be accomplished so that the plug and receptacle are completely separated during each cycle. The connectors shall then be subjected to the salt spray test in accordance with test procedure EIA/ECA-364-26. The following details and exceptions apply:

a. The connector series I and II finishes (all series I and II classes) and series III and IV classes listed above, except classes J and M, shall be tested for 452 hours mated followed by 48 hours unmated. For classes J and M only, initial qualification only, the connectors shall be subjected to 50 cycles durability followed by 1952 hours salt spray mated, then 48 hours salt spray unmated followed by 1450 cycles durability. For periodic inspection, for classes J and M only, connector pairs shall be tested 452 hours mated followed by 48 hours unmated.
b. The connectors shall not be mounted but shall be suspended from the top of the chamber using waxed twine or string, glass rods, or glass cord.
c. Wire ends shall be protected to prevent salt migration.

After salt spray exposure, the remaining number of durability cycles specified in 4.5.8 shall be completed.

4.5.14 Contact resistance. See 3.18.

4.5.14.1 Contact resistance, crimp removable contacts. Applicable to series III, only. Mated connectors shall be tested in accordance with the contact resistance requirements of SAE-AS39029. The following details shall apply: Contact resistance testing shall be performed at ambient temperature. 10% of contacts shall be tested in accordance with SAE-AS39029 except the millivolt drop shall be measured at the end of the test article wire bundles and recorded. Of the 10%, 1/3 of the contacts shall be selected from the center of the insert arrangement, 1/3 of the contacts shall be selected from those located nearest to the connector shell, and the remaining 1/3 shall be selected from random locations. After vibration testing, a second millivolt drop measurement shall be conducted at the same location at the end of the wire bundles. The differential between the first millivolt drop measurement and the second millivolt drop measurement shall not be greater than 100 milliohms. If the insert arrangement includes 11 contacts or more, then circuits for the contacts selected for contact resistance testing prior to and following vibration testing are not required to be monitored for discontinuities during vibration testing,

4.5.14.2 Contact resistance, hermetic connectors. Contacts of mated connectors shall be tested in accordance with test procedure EIA-364-06.

Downloaded from http://www.everyspec.com

4.5.15 Electrical engagement. See 3.19. Counterpart plugs and receptacles shall be wired to provide a complete series circuit through all contacts of the mated connector. A suitable power source and indicator shall be provided such that the earliest point at which the circuit is completed, during normal connector mating, can be established. Connector halves shall be slowly mated by the normal mating means until first indication of a completed circuit is observed. Means shall be provided to assure that electrical contact is made between the pin and the spring of the socket contact, rather than the hood of the socket contact. The mating operation shall be held at this point and the overall connector length shall be measured from solid reference points on the connector halves. The mating operation shall then be continued until the connector halves are in the completely mated position. A second overall length measurement shall then be taken from the same reference points. The difference of these two measurements shall be not less than specified in 3.19. Both the outer shield and inner conductor circuits shall be included in the test of shielded contacts.

4.5.16 External bending moment. See 3.20. The receptacle connector shall be mounted as in normal service to a rigid panel. Before mating the plug connector to the receptacle, an adapter or test torque arm shall be attached as shown on figure 22. After mating the plug and receptacle connectors, the distance "L" from the point of load application "P" to the mounting panel shall be determined. The load to be applied at point "P" shall then be determined as the bending moment specified in table XVII divided by the lever arm "L". This load shall be applied at a rate of approximately 10 pounds per second until the required load is achieved. The applied load shall be held for 1 minute, then the load shall be released. Continuity of the contacts shall be monitored during the test. The test circuit used to monitor the circuit shall be capable of detecting a discontinuity in excess of 1 microsecond.

TABLE XVII. External bending moment.

Series I		Series II		Series III		Series IV	
Size	Pound inches	Size	Pound inches	Size	Newton meters	Size	Newton meters
9	75	8	50	9	11.3	9	---
11	230	10	75	11	33.9	11	26.0
13	310	12	75	13	45.2	13	35.0
15	380	14	100	15	56.5	15	42.9
17	450	16	125	17	67.8	17	50.9
19	500	18	125	19	79.1	19	56.5
21	530	20	125	21	90.4	21	59.9
23	650	22	125	23	101.7	23	73.5
25	650	24	150	25	113.0	25	73.5

4.5.17 Bayonet coupling pin strength. Applicable to series I and II only, see 3.21. One coupling pin in each receptacle shall be subjected to 50 -0/+5 pounds load applied to the swaged end along the major axis of the coupling on swaged pins, and perpendicular to the pin centerline on the exposed portion of welded or brazed pins. A steel test tip shall be used for application of the load on swaged pins. A steel test fixture contoured to the shape of the coupling pin shall be used for application of the load on the welded or brazed pins.

4.5.18 Gauge location. See 3.22. Applicable test gauges, specified on figure 16, figure 17, figure 18, and figure 19, shall be installed in three randomly selected cavities in each connector, with the accessory rear hardware removed. With each test gauge fully seated back against its contact retention device, the axial location of the front end of each gauge shall be measured relative to the reference point specified on figure 1, figure 2, figure 3, and figure 4, as applicable. The test shall be repeated on pin assemblies using gauges specified on figure 17 and seating them forward in the contact cavity.

Downloaded from http://www.everyspec.com

4.5.19 Gauge retention. See 3.23. Applicable test gauges, specified on figure 16, figure 20, and figure 21 shall be installed in three randomly selected cavities in each connector, with the accessory rear hardware removed. The axial load specified in table XVIII shall be applied to individual test gauges in both directions. The load shall be applied at a rate of approximately 1 pound per second until the specified load has been reached. Gauge displacement shall be measured with respect to the connector shell after an initial load of 2 pounds has been applied to assure that all slack has been taken up.

4.5.20 Contact retention. See 3.24. Unless otherwise specified, contacts shall be tested to procedures I and II.

4.5.20.1 Procedure I, axial displacement from front to rear. Contact retention shall be tested in accordance with test procedure EIA/ECA-364-29. The following details and exceptions shall apply:

a. Number of samples - The test shall be performed on 20 percent of the contact complement; but not less than three contacts in each connector half.
b. Applied axial load - Preload to 3 pounds maximum, (13.6 Newtons). Apply load as specified in table XVIII.
c. Special requirements - Where the test sequence required maintenance aging prior to contact retention, the contacts which were subjected to maintenance aging shall also be selected for contact retention.
d. Axial direction - The applicable forces shall be applied along the longitudinal axis of individual contacts in the direction tending to displace the contacts to the rear.
e. Only the contacts to be tested need be installed in the connector.

4.5.20.2 Procedure II, axial displacement from rear to front. Contact retention shall be tested in accordance with test procedure EIA/ECA-364-29. The following details and exceptions shall apply:

a. 4.5.10.1a through 4.5.10.1.c apply.
b. Axial direction - Same as 4.5.20.1.d, except the direction shall tend to displace the contacts to the front.
c. Only the contacts to be tested need be installed in the connector.

TABLE XVIII. Contact retention.

Contact size (mating end)	Wire barrel size	Pounds	Newtons
		Load ± 10 percent	
23	-22	10	44
22	-22D, -22 1/ and -22M 1/	10	44
20	-20	15	67
16	-16	25	111
12	-12	25	111
10	-10	25	111
8 twinax or coax	N/A	25	111

1/ Contact sizes 22-22 and 22-22M are inactive for new design.

Downloaded from http://www.everyspec.com

4.5.21 Altitude-low temperature. See 3.25. Wired, mated, assembled connectors shall be tested in accordance with test procedure EIA-364-105. The following details and exceptions apply:

a. No wire ends or splices inside the chamber.
b. Chamber pressure shall be reduced to simulate an altitude of 100,000 feet. The chamber internal temperature shall be reduced to -65 °C, +0 °C, -4 °C. Temperature shall be maintained until the mated pair stabilizes.
c. Insulation resistance test to be performed at 100,000 feet at -65 °C, +0 °C, -4 °C, and shall be in accordance with 4.5.10.1.
d. Dielectric withstanding voltage test to be performed after return to ambient conditions and shall be in accordance with 4.5.11.1.

4.5.22 Accessory thread strength. See 3.26. The mated connector shall be mounted as in normal service to a rigid panel. The torque wrench shall be attached as shown on figure 23. After mating the plug and receptacle connectors, a torque shall be applied to the accessory end of the plug at a rate of approximately 10 pounds-inches per second until the required torque is achieved. The applied load shall be held for 1 minute, then the load shall be released. The test shall then be repeated on the accessory end of the receptacle.

4.5.23 Vibration. See 3.27. Wired and mated connectors shall be subjected to the applicable test(s) specified. Connectors shall be mounted on the vibration table by normal means. All contacts shall carry a test current of 100 milliamperes maximum and shall be continuously monitored for discontinuities throughout the test. A detector capable of detecting any discontinuities in excess of 1 microsecond shall be used. All series I and II connectors shall have the wire bundles clamped to fixed points at least 8 inches (203.2 mm) behind the connector. All series I, III, and IV plugs shall have an accessory load fixture specified on figure 24 attached during vibration.

4.5.23.1 Random vibration. Applicable to series II only. Connectors shall be tested in accordance with test procedure EIA-364-28. The following details shall apply:

a. Test condition VI, letter "J", except class Y shall be tested to letter "G".
b. Duration shall be 8 hours in the longitudinal direction and 8 hours in a perpendicular direction for a total of 16 hours.
c. Means may be provided to relieve hermetic solder terminations, and jumper wires may be used between contacts.

4.5.23.2 Vibration. Applicable to series I, III and IV only. Mated connector pairs shall be divided equally into three groups. One connector group shall be subjected to sine vibration as specified, one connector group shall be subjected to random vibration in accordance with 4.5.23.2.3, and the third connector group shall be subjected to random vibration in accordance with 4.5.23.2.4. See below for requirements for each connector series:

a. Series I:
   Sine vibration (see 4.5.23.2.2).
   Random vibration (see 4.5.23.2.3).
   Random vibration (see 4.5.23.2.4).
b. Series III:
   Sine vibration (see 4.5.23.2.1).
   Random vibration (see 4.5.23.2.3).
   Random vibration (see 4.5.23.2.4).
c. Series IV:
   Sine vibration (see 4.5.23.2.2).
   Random vibration (see 4.5.23.2.3).
   Random vibration (see 4.5.23.2.4).

Means may be provided to relieve hermetic solder terminations, and jumper wires may be used between contacts.

Downloaded from http://www.everyspec.com

4.5.23.2.1 Sine vibration. Applicable to series III only. Connector samples shall be subjected to a simple harmonic motion from 10 to 2,000 Hz in each of three mutually perpendicular axes. The level of vibration shall be a velocity of 254 mm/sec from 10-50 Hz; 1.5 mm double amplitude from 50-140 Hz, and 60 G from 140-2,000 Hz. The entire frequency range from 10-2,000 Hz and back shall be traversed in 20 minutes. The vibration shall be applied for a duration of 12 hours in each of the three mutually perpendicular axes for a total of 36 hours. Each axis of vibration shall be accomplished by vibrating for 4 hours at ambient room temperature, 4 hours at -55°C ± 5°C, and 4 hours at +175°C ± 5°C for classes J, T, W and Z, and 200°C ± 5°C for classes C, F, G, H, K, L, N, M, R, S, and Y.

4.5.23.2.2 Sine vibration. Applicable to series I and IV only. Connectors shall be subjected to the test specified in accordance with MIL-STD-202-204, test condition G.

4.5.23.2.3 Random vibration. Applicable to series I, III and IV only. Connectors shall be subjected to the test specified in test procedure EIA-364-28. The following details shall apply:

a. Test condition VI - Letter "J". Series III at elevated temperature and series I and IV at ambient temperature, including verification of metal-to-metal shell bottoming for series III only (see 3.4.6.2.2). The verification of plug to receptacle metal-to-metal shell bottoming (or composite-to-composite shell bottoming) shall be accomplished by demonstrating that the connector meets a minimum rigidity requirement of 300 Hz (i.e. no resonances at frequencies less than 300 Hz). Two accelerometers, one for the perpendicular axis and one for the longitudinal axis (see figure 30), shall be placed on the backshell of the plug connector in the location as specified on figure 24 (dimension LL). Additionally, an input or control accelerometer shall be placed on a non-resonant point of the fixture to control the input vibration. If the accelerometers on the backshell indicate a resonance at a frequency below 300 Hz during any part of the vibration test procedures, the connector shall be considered to have failed (see 3.4.6.2.2). Verification of resonance shall be accomplished by monitoring the accelerometers placed on the backshell assembly. Prior to the random vibration test, a 2 g sinusoidal resonance search shall be performed to verify system response. During the random vibration test, the accelerometers data shall be recorded at 1 hour intervals. Following the random vibration test, the sinusoidal resonance search shall be performed again to verify any change in system resonance. In the case of the sinusoidal tests, resonance shall be defined as a response greater than twice the input vibration level. In the case of the random vibration test, resonance shall be defined as a response greater than four times the input vibration level ($1g^2$ vs $4g^2$). Note: Lightweight accelerometers and mounting features shall be selected so that the total mass of the backshell/cable assembly shall be as specified on figure 24.

b. Vibration to be at the following temperatures:

   (1) Series III, classes J, T, W and Z: 175°C ± 5°C, classes C, F, G, H, K, L, M, N, R, S and Y: 200°C ± 5°C.

   (2) Series I and IV: Ambient temperature.

c. Duration shall be 8 hours in the longitudinal direction and 8 hours in a perpendicular direction for a total of 16 hours for classes C, E, F, G, J, K, L, M, N, R, S, T, W and Z. Duration shall be 4 hours in the longitudinal direction and 4 hours in a perpendicular direction for a total of 8 hours for classes H, Y, and N hermetic receptacles.

4.5.23.2.4 Random vibration. Applicable to series I, III and IV only. Connectors shall be tested in accordance with test procedure EIA-364-28. The following details shall apply:

a. Test condition V - Using the vibration envelope shown on figure 25.
b. Vibration to be conducted at ambient temperature.
c. Duration shall be 8 hours in the longitudinal direction and 8 hours in a perpendicular direction for a total of 16 hours.
d. Figure 24 test accessory shall not be required.

Downloaded from http://www.everyspec.com

4.5.24 Shock. See 3.28. Wired and mated connectors shall be subjected to the applicable test specified. Connectors shall be mounted by normal means and held together by normal coupling means. All contacts shall be wired in a series circuit with 100 milliamperes maximum current flow through the series circuit during shock. Connectors shall be monitored for any discontinuities. A detector capable of detecting all discontinuities of 1.0 microsecond or longer shall be used.

4.5.24.1 Standard shock (all series). Connectors shall be tested in accordance with test procedure EIA-364-27. The following details shall apply:

a. The pulse shall be an approximate half sine wave of 300 G ± 15 percent magnitude with a duration of 3 ± 1 milliseconds.
b. The wire bundle shall be clamped to fixed points at least 8 inches (203.2 mm) from the rear of the connector.

4.5.24.2 High-impact shock. Applicable to series I, III and IV only. Wired and mated connectors shall be tested in accordance with MIL-S-901, grade A with the following modifications and additions. Mounting fixture shall be in accordance with MIL-S-901, light weight. The wire bundle shall be supported on a stationary frame in such a manner to provide a free flexing length between the frame and fixture of not less than 36 inches (914.4 mm). Each plug shall be terminated with at least 80 percent of wired contacts. The wire bundle shall be provided with a straight, environmental, backshell, category 2B in accordance with SAE-AS85049, the longest length available per shell size. Discontinuity monitoring shall be performed in accordance with EIA-364-46.

4.5.25 Shell-to-shell conductivity. Applicable to all classes and finishes except class C and finish C, see 3.29. Mated connectors shall be tested in accordance with test procedure EIA-364-83.

4.5.25.1 Backshell shield braid-to-shell conductivity. Applicable to Series III only, all classes and finishes, see 3.29.1. Mated connectors shall be tested in accordance with test procedure EIA-364-83, except that measurement shall be made between the plug backshell's shield braid and either the accessory threads or mounting flange of the receptacle (see figure 31 for test setup). A backshell in accordance with SAE-AS85049 shall be utilized.

4.5.26 Humidity. See 3.30. Wired, mated connectors shall be tested in accordance with test procedure EIA-364-31. The following details and exceptions shall apply:

a. Test method IV, test duration B (10 24-hr cycles, 240 hrs total), including "cold shock" sub-cycle (step 7a).
b. The mated connectors shall be mounted in a vertical position.
c. For qualification testing, insulation resistance readings shall be made on a minimum of 50 percent of the circuits. Outer circuits shall be measured to the connector shell.

4.5.27 Shell spring finger forces. See 3.31. Plugs shall be completely mated and unmated 10 times with counterpart receptacles less coupling pins (if applicable) and inserts. On the mating of the first cycle, the forces necessary to engage the connectors shall be within the values specified in table VII. On the unmating of the last cycle, the forces necessary to separate the connectors shall be within the value specified in table VII. When measuring the engagement and separation forces, the axial loads shall be applied at a displacement rate of 0.5 inches per minute.

Downloaded from http://www.everyspec.com

4.5.28 EMI shielding. Applicable to all classes and finishes except class C and finish C, see 3.32.

4.5.28.1 EMI shielding, low frequencies. Applicable frequency range is 100 to 1,000 MHz only. The EMI shielding effectiveness of mated connectors with EMI backshells (backshells may be soldered to the connector) shall be measured in a triaxial radio frequency leakage fixture as shown on figure 26. The EMI leakage from the conductor inside the connector in the same inner coaxial line into the outer coaxial line shall be measured at the frequencies specified in table X within a frequency accuracy of ±5 percent. The level of detected signal power shall be specified by a tunable radio frequency field intensity meter isolated from the test circuit by a 3 to 10 dB pad. Care shall be taken to ensure that the signal is a result of EMI leakage from within the mated connector and not due to a faulty termination inside the fixture. All terminations inside the fixture, whether to the EMI backshells or between internal conductors, shall have a leakage at least 10 dB less than the test requirements. The signal source shall be set to the desired frequency. The signal shall be fed through a 3 to 10 dB isolation pad to a parallel circuit consisting of a coaxial switch (DPDT) so connected that the signal can be manually or electronically fed alternately to the fixture and to a variable 100 dB reference attenuator. The attenuator shall be adjustable in 1 dB steps and calibrated to ± 3 dB.

a. The inserts may be removed from the connectors under test or the contacts removed and a hole drilled through the inserts to accommodate a center conductor of suitable geometry to provide a good 50-ohms impedance match with the inside diameter of the mated connector shells and EMI backshells. Tapered transition may be used to provide a means of changing diameters without introducing significant discontinuities in the line. The maximum voltage standing wave ratio (VSWR) in the inner coaxial line shall be 1.5. The outer shell of the test fixture shall be so constructed as to provide a good 50-ohms impedance match with the outside diameter of the mated connector shells, coupling ring, and EMI backshells. The maximum VSWR of the outer coaxial line shall be 1.5.

b. A sliding circumferential short shall be positioned behind the connector on the signal input end of the fixture to provide for tuning the outer coaxial line for maximum output at each test frequency. The allowable travel of this short shall be greater than 1/2 wave length at the lowest test frequency of 1.5 meters minimum for 100 MHz. The inner coaxial line shall be terminated in a fixed 50-ohms load impedance behind the connector at the output end of the fixture.

c. The connectors used to couple together the various elements of the test system shall be of a low-leakage type which have a nominal impedance of 50 ohms, a VSWR of less than 1.5, and a minimum leakage attenuation of 100 dB. The output impedance of the signal source and the input impedance of the detector shall be nominally 50 ohms with a maximum VSWR of 1.5. The input and output VSWR of the standard attenuator shall be less than 1.5 in the 20 to 100 dB range.

d. The relative signal level in the variable attenuator shall be equaled to the signal level through the leakage fixture by adjusting the attenuator. The signal loss in the fixture can then be read from the setting on the variable attenuator.

4.5.28.2 EMI shielding, high frequencies. Applicable frequency range is 1,000 to 10,000 MHz only. The EMI shielding effectiveness of mated connectors with EMI backshells shall be measured using the mode-stirred technique in accordance with test procedure EIA-364-66.

4.5.29 Ozone exposure. See 3.33. Wired, mated connectors shall be tested in accordance with test procedure EIA-364-14.

4.5.30 Fluid immersion. Initial qualification, see 3.34. Connector samples shall be tested in accordance with test procedure EIA-364-10 (one sample per fluid). Following the fluid immersion cycles, the connectors shall be tested for coupling torque in accordance with 4.5.7 and dielectric withstanding voltage at sea level in accordance with 4.5.11.1 within 3 hours.

Downloaded from http://www.everyspec.com

4.5.30.1 Retention system fluid immersion. See 3.34.1. Unmated connectors with contacts removed shall be immersed in the fluids in accordance with test procedure EIA-364-10 (one sample per fluid) for 2 hours at room temperature. After removal, excess fluid shall drain from the connectors for 4 hours and the contacts reinstalled. Following the test, the connectors shall be subjected to contact retention as specified in 4.5.20.

4.5.31 Pin contact stability. See 3.35. The unmated connectors shall have 10 percent of their pin contacts subjected to this test. Gauge pins conforming dimensionally to the requirements on figure 16 shall be used. The connector shall be held in a holding device. The forces specified in table XI shall be applied to the exposed rod as shown on figure 27. The load shall be applied gradually at a rate not exceeding 1 inch (25.4 mm) per minute. The total pin tip displacement shall be measured as shown on figure 27.

4.5.32 Contact walkout. See 3.36. Two contacts in each plug and receptacle shall be tested. The contacts shall be crimped to stranded steel cable of an appropriate size and installed in the connector. The unmated connector shall be mounted in a test fixture as shown on figure 28. A 3 pound load shall be applied to the cable. One 360° rotation of the fixture with the connector mounted shall constitute one cycle. The connector shall be subjected to 100 cycles at a rate of 10 to 20 cycles per minute.

4.5.33 Installing and removal tool abuse. Applicable at initial qualification only, see 3.37. Five contact cavities in each connector shall be subjected to the following removal tool rotation test. Different contact cavities shall be used for each test. Tools in accordance with MIL-I-81969/14 (except size 23) or SAE-AS81969/1 (size 23 only), as applicable, shall be utilized to perform this test. Should a tool become damaged during any of the testing, it shall be replaced. Failure of a tool shall not constitute a test failure.

4.5.33.1 Removal tool rotation. The tool shall be inserted as if to remove a contact, and a total of 3 pounds axial load shall be applied. With the force applied, the tool shall be rotated 180° and then removed also removing the contact. The contact shall be reinserted. The steps shall be repeated three times on each of five contacts selected.

4.5.34 High temperature exposure.

4.5.34.1 High temperature exposure with contact loading. See 3.38.1. Connectors with removable contacts shall have one mating pair of contacts removed from an untested contact cavity and replaced with contacts crimped or otherwise attached to steel cable or steel-cored copper wire (copper-weld, or equivalent) of an appropriate size. The axial location of these contacts shall be measured for conformance to the applicable dimensions on figure 1, figure 2, figure 3, and figure 4, as applicable, with a load of approximately 2 pounds applied to seat the contact back against the retention device. The connector shall then be mounted in a fixture equivalent as shown on figure 29. A weight equal to 50 percent of the axial load specified in table XVIII for the applicable contact size shall be suspended freely from each steel wire.

A current of 100 milliamperes maximum shall be applied to the test contacts and a suitable instrument shall be used to monitor the circuit for discontinuities in excess of 1 microsecond. The mounted connector shall then be exposed to 150°C for finish A of series I and II, 175°C + 3°C/- 0°C for finish B of series I and II, and classes J, T, W and Z of series III and IV, and 200°C + 3°C/- 0°C for all other finishes and classes for 1,000 hours minimum. After the connectors return to ambient temperature, they shall be unmated and the contact locations shall be remeasured with approximately 2 pounds axial load applied to seat the contact back against the retention device.

4.5.34.2 High temperature exposure. Applicable to all classes of series III except hermetic connectors, see 3.38.2. Mated connectors shall be subjected to an ambient temperature of 175°C + 3°C/ - 0°C for classes J, T, W and Z, and 200°C + 3°C/-0°C for all other classes. The temperature shall be maintained for 1,000 hours.

Downloaded from http://www.everyspec.com

4.5.35 Electrolytic erosion. Applicable to all classes of series III and IV, see 3.39. The wired receptacle half of the connector containing the pin contacts shall be firmly mounted in a vertical position pins facing up. A salt-water solution (5 percent salt by weight) shall be poured onto the pin interface until the solution level just reaches the pin tips. The solution shall remain in the connector for a minimum of 30 seconds and then poured out, lightly shaking excesses from the connector. The counterpart plug shall immediately be mated with the receptacle. One cell pattern, with all contacts adjacent to a central contact at a positive polarity and the center contact at a negative polarity, shall be set up at a location giving the most uniform distribution of contacts adjacent to the center contact. A potential of 60 volts dc shall be applied between the contacts adjacent to the center contact. The contacts shall be energized for 40 hours. Following this, with the voltage disconnected, the connectors shall be unmated and the pin contacts removed (except for hermetics). The contacts shall be examined under three power (3X) magnification for erosion to base metal.

4.5.36 Firewall. Applicable to classes K and S connectors, series III only, see 3.40. The mated, torqued, and wired connectors shall be tested in accordance with test procedure EIA-364-45. The following details shall apply: Wire bundles to be clamped to fixed points at least 8 inches (203.2 mm) behind the connector. The dc current shall be applied for the first 5 minutes without break in electrical continuity. After the fifth minute a test potential of 220 - 260 V ac (rms), 50 - 60 Hz, shall be applied for 1 minute between each of the circuits, and a test potential of 110 - 130 V ac (rms) between each circuit and the connector shells. There shall be no leakage current equal to or greater than 2 amperes during the sixth minute of the test.

4.5.37 Contact plating thickness. Applicable to hermetically sealed connectors only, see 3.41. Measurement shall be made on the external surface of the contact, .100 to .150 inches (2.54 to 3.81 mm) from end of mating end. Contact plating thickness shall be measured by any procedure which will give results within ± 10 percent of the true thickness.

4.5.38 Contact engagement and separating force. Applicable to hermetically sealed connectors with sockets only, see 3.42. Contact engagement and separating force shall be measured as specified in SAE-AS39029.

4.5.39 Resistance to test probe damage. Applicable to hermetically sealed connectors with sockets only, see 3.43. Resistance to probe damage shall be performed as specified in SAE-AS39029, except contacts shall be installed in connector.

4.5.40 Ice resistance. Applicable to all classes under series I, III and IV, see 3.44. Mated connectors shall be immersed in tap water for 1 minute and then placed in an ambience of - 65° C +0°C/- 5°C for 1 hour. A minimum of three such cycles shall be performed until the connector surfaces are completely iced over. Immediately after removal from the last cycle, the frozen connectors shall be uncoupled and then recoupled. The connectors shall be uncoupled and recoupled a second time with the uncoupling and coupling torque measured in accordance with 4.5.7. The uncoupling and coupling torque shall not be measured on the first uncoupling and recoupling.

4.5.41 Dust (fine sand). Applicable to all classes under series I, III and IV, see 3.45. Mated connectors shall be tested in accordance MIL-STD-202-110.

4.5.42 Thermal vacuum outgassing. Applicable to space grade classes G and H for initial qualification only, see 3.46. All materials used in the finished connector shall be tested in accordance with ASTM E595. Samples to be tested shall have been processed in the same manner as that used in production of the qualification lot.

4.5.43 Hydrolytic stability (classes J and M). Initial qualification, see 3.47. Mated connectors less inserts shall be subjected to the following water absorption test (connectors shall be unplated). The connectors shall be tested in accordance with ASTM D570 for long-term immersion.

Downloaded from http://www.everyspec.com

4.5.44 Cavity leakage. See 3.48. Unmated connectors shall be tested in accordance with test procedure EIA-364-78. The following details apply: The test probe shall be inserted into the contact cavity to the point where it seals against the surface of the connector face. Each contact cavity shall be pressurized to 1.5 +/- 0.5 psi for 5 seconds minimum.

4.5.45 Impact. Applicable to classes J and M only, see 3.49. Connector plugs with SAE-AS85049 straight strain relief clamps shall be tested in accordance with test procedure EIA-364-42. The following conditions apply.

a. Drop height shall be 4 feet (1.219 meters).
b. Number of drops shall be 8.
c. Plate shall be indexed at 36° intervals.
d. Plugs shall have no caps or covers installed.

4.5.46 Insert bond strength. See 3.50. The connector's bonded insert assembly shall be tested in accordance with test procedure EIA-364-79.

4.5.47 Resistance to indirect lightning strike. See 3.51. Series III only, all classes. Mated connectors as specified in test procedure EIA/ECA-364-75 shall be tested in accordance with test procedure EIA/ECA-364-75 with the following details and exceptions:

a. Test sequence shall be as specified in table XIII, group 14.
b. Each specimen shall be subjected to three current pulses in each polarity (a total of six pulses). After each current pulse, the connectors shall be unscrewed ½ turn counter-clockwise without removing or unmating in order to break any weld points that may have occurred. Connectors shall then be re-tightened ½ turn, back to the fully mated position.
c. Visual examination shall be conducted under three-five power (3-5X) magnification in accordance with test procedure EIA/ECA-364-75.
d. Coupling torque shall be in accordance with 4.5.7.
e. Shell-to-shell conductivity testing shall be in accordance with 4.5.25.1.
f. The peak current, I_{pk}, shall be as specified in table XIX.
g. Insulation resistance at ambient temperature shall be in accordance with 4.5.10.1, followed by dielectric withstanding voltage at sea level in accordance with 4.5.11.1.
h. The waveform for indirect lightning strike effects, as specified on figure 32, shall be utilized. Indirect lightning strike test setup, as specified on figure 33, shall be utilized.

TABLE XIX. Resistance to indirect lightning strike test currents.

Connector class	Peak current (Amps)
Class C	not applicable
Classes F, G, H, K, L, N, R, T, S, W, Y and Z	10,000
Classes J and M (shell sizes 11 and larger)	6,000
Classes J and M (shell sizes 9)	3,000

4.5.48 Magnetic permeability. See 3.3.4. Connectors shall be tested in accordance with test procedure EIA-364-54.

4.5.49 Post test examination. The tested connectors and contacts shall be examined for compliance with 3.52 and 3.53 to determine the effects of previous testing. Any evidence of cracking, loosening of parts, carbon tracking, excess wear, or missing parts shall be recorded.

Downloaded from http://www.everyspec.com

5. PACKAGING

5.1 Packaging. For acquisition purposes, the packaging requirements shall be as specified in the contract or order (see 6.2). When actual packaging of materiel is to be performed by DoD or in-house contractor personnel, these personnel need to contact the responsible packaging activity to ascertain packaging requirements. Packaging requirements are maintained by the Inventory Control Point's packaging activities within the Military Service or Defense Agency, or within the military service's system commands. Packaging data retrieval is available from the managing Military Department's or Defense Agency's automated packaging files, CD-ROM products, or by contacting the responsible packaging activity.

6. NOTES

(This section contains information of a general or explanatory nature that may be helpful, but is not mandatory.)

6.1 Intended use. The various configurations of the connectors are intended for use as follows:

a. Series I connectors: General application within weapon system where a quick disconnect coupling system is required for blind mating or other mating problem areas. These connectors provide high-vibration characteristics and are suitable for severe wind and moisture problem (SWAMP) areas with proper connector accessories.

   Class G, finish F: Provides a conductive shell for EMI considerations but with additional requirements for space grade applications.
   Class H: Same as class Y, but with additional requirements for space grade applications.
   Class T, finish F: Provides a conductive shell for EMI considerations.
   Class Y: Applications where pressure must be maintained.
   Classes R and U: Applications requiring high corrosion resistance.

b. Series II connectors: General application within weapon systems which are not subjected to high vibration or SWAMP areas. These connectors are not scoop-proof (see 6.1.1). Connectors are lightweight.

c. Series III connectors: General application within weapons systems and are suitable for blind mating areas. These connectors provide high-vibration characteristics at elevated temperature and are suitable for SWAMP areas with the proper connector accessories.

   Class W: Provides a corrosion resistant, conductive shell.
   Class F: Provides a conductive shell for EMI requirements.
   Class K: Provides a stainless steel, firewall connector for engine applications.
   Class L: Provides a stainless steel connector with conductive plating for enhanced EMI performance for general applications.
   Class S: Provides a stainless steel, firewall connector with conductive plating for enhanced EMI performance.
   Class Y: Applications where pressure must be maintained.
   Class J: Provides a corrosion resistant, lightweight composite shell with conductivity equivalent to class W.
   Class M: Provides a corrosion resistant, lightweight composite connector with conductive plating for EMI performance equivalent to class F.
   Class N: Provides a hermetically sealed connector with conductive plating for enhanced EMI performance.
   Class G: Same as class F but additional requirements for space grade applications.
   Class H: Same as class Y but additional requirements for space grade applications.
   Class R: Applications requiring high corrosion resistance (for metallic shells).
   Classes T and Z: Applications requiring alternatives to cadmium plating.

Downloaded from http://www.everyspec.com

d. Series IV connectors: General application within weapons systems where a quick disconnect coupling system is required for blind mating or other mating problem areas. These connectors provide high-vibration characteristics and are suitable for SWAMP areas with the proper connector accessories.

Classes W, F, G, H, J, M, and Y: Same as series III.
Class R: Applications requiring high corrosion resistance.
Classes T and Z: Applications requiring alternatives to cadmium plating.
Class N: Provides a hermetically sealed connector with conductive plating for enhanced EMI performance.

e. Series I and II are intermateable with MIL-DTL-27599, series I and II, respectively.

6.1.1 Application guidance and restrictions.

a. When evaluating connectors for use in new design systems and support equipment, users are advised to evaluate carefully for each application the relative merits of the long shell series I, III, IV, and short shell series II connectors. When considering use of the short shell series II connectors, the following areas must be evaluated:

(1) Series II connectors are vulnerable to pin contact bending from scooping, with contact size 22 being the most vulnerable.

(2) Use of series II connectors must be avoided in areas of blind mating.

(3) Receptacles must be located so as to minimize the amount of required cable bending. When using series II connectors with large cables which must be bent at right angles, the cables must have the right angle bend permanently established.

(4) Series II connector should not be used with heavy jacketed cable and excessive overhang moments, because of possible shell damage.

(5) Series II connectors should not be used in areas of rough handling such as experienced near engine removal, generators, support equipment, or portable equipment, etc.

(6) When mating series II connectors in areas of difficult visibility, care must be exercised to make sure that all bayonet pins are engaged by the coupling ring, since it is possible to engage only one bayonet pin and therefore only partially couple.

(7) When mating series II connectors in areas of difficult visibility, care must be exercised to make sure that connector plugs with pins are not coupled to receptacles with pins. This situation will result in the contacts touching.

b. When the use of series IV connectors is considered, the design of the coupling system should be evaluated. If the coupling mechanism between the coupling ring and the shell is not properly positioned prior to the mating operation, the coupling ring must be repositioned prior to mating.

c. Series I and II, class P connectors should not be used in Air Force new design applications, except when specifically approved by the procuring activity.

Downloaded from http://www.everyspec.com

d. Application restrictions concerning the use of these connectors are set forth in MIL-STD-1353.

Additional application restrictions are listed below:

(1) Finish A, series I and II, is inactive for new design.

(2) Class E, series I and II wall mount and jam nut receptacles: Inactive for new design. For new design requiring wall mount or jam nut types, use class T.

(3) Class P, series I and II, (for potting): Inactive for new design for Air Force.

(4) Finish F, all environment resistant classes, series I and II: Finish F is not for Navy use. Finish F is inactive for new design for Air Force use.

(5) Class F, series III and IV: Class F is not for Navy use. Class F is inactive for new design for Air Force use. Since class G has the same finish as class F, Class G is not for Navy or Air Force use (see note below).

Note: Classes or surface treatments and finishes that are listed as “inactive for new design” are not for use in new design or equipment, but may continue to be used to support existing designs or equipment. Classes F and G are considered to be unsuitable for Navy and most Air Force applications due to the relatively low corrosion resistance of the electroless nickel surface finish.

e. Recommended panel cutout dimensions are shown on figure 11.

f. Compatibility of connectors should be addressed when intermating different classes and finishes. Galvanically incompatible classes and finishes should not be intermated together. When intermating classes with different performance requirements, the lower performance requirements of the two classes apply.

g. Composite class connectors should be considered for applications requiring increased corrosion resistance, increased durability, or decreased weight.

h. Box mount connectors are intended to be used on environmentally sealed boxes. If full wire sealing capability is needed, a wall mount or jam-nut mount connector should be used.

i. A summary of shell materials and finishes for each series is listed in table XX.

j. For environment resisting classes, wire sealing for size 8 shielded (twinax or coax) contacts for some insert arrangement, including 17-2, 19-18, 21-75, 25-7, 25-8, 25-20, 25-46 and 25-90, may be accomplished by the use of separate non-standardized sealing boots that are furnished with the connector (see 3.4.3.2.2) (note: some manufacturers’ designs may accomplish wire sealing with a heat shrink sleeve, only; the majority of qualified connectors with insert arrangement 25-20 use a heat shrink sleeve with size 8 contacts). If size 8 shielded contacts with sealing boots for the above-listed insert arrangements are replaced, it is recommended that the boots be retained for use with the new contacts. Insert arrangements 17-3, 19-19, 21-76, 25-9, 25-10, 25-21, 25-47 and 25-91, which use size 8 shielded contacts, require the use of a standardized sealing boot in accordance with MIL-DTL-38999/62.

k. Class T, series III and IV and finish T, series I and II, is required to be nonreflective. Finish W is required to be an olive drab color in accordance with SAE-AMS-QQ-P-416. Class Z is required to be black in accordance with ASTM B841 (see 3.3.6.4). These nonreflective finishes and colors may vary in color depending on the method of manufacture. This variance in color does not alter the performance capabilities of the finish.

l. Storage, cadmium plated connectors: See SAE-AMS-QQ-P-416 for packaging limitations for cadmium plated products. Users are advised that cadmium plated parts should not be packed in non-ventilated containers or in direct contact with wood or cardboard, especially under conditions of high humidity or moisture, due to a corrosive reaction that often occurs between the cadmium plating and organic acids (i.e. formic acid, butyric acid, etc.) which form under these conditions.

Downloaded from http://www.everyspec.com

m. Composite connector plating: The plating on composite class J and M connectors is subject to minor chipping (i.e., chipped places in plating less than 1.02 mm (.040 in)). This minor chipping is considered a cosmetic issue. As long as the composite base material is intact in the exposed area of the chipped plating, the chip should not affect form, fit or function. Connector shell areas most often subject to minor chipping include the keys or keyways, the mounting flange edges, or the plug shell nose.

TABLE XX. Shell materials and finishes. 1/ 2/

Class Code or Finish Code	Series	Description (finish or surface treatment)	Shell material	Salt spray (hours)	Upper temp	Electrically conductive	Shell-to-shell conductivity (millivolts) 3/)
A	I & II	Cadmium over nickel, light gold	AL	48	150°C	Yes	2.5
B	I & II	Cadmium over nickel, olive-drab	AL	96/500	175°C	Yes	2.5
C	I & II	Anodic, black	AL	48/500	200°C	No	N/A
D	I & II	Tin (see 3.3.1.3)	CRS	24	150°C	Yes	10.0
E	I & II	Passivate	SST	48/500	200°C	Yes	50.0
F	All	Electroless nickel	AL	48	200°C	Yes	1.0
G	All	Electroless nickel	AL	48	200°C	Yes	1.0
H	III & IV	Passivate	SST	500	200°C	Yes	10.0
J	III & IV	Cadmium over nickel, olive-drab	C	2000	175°C	Yes	3.0
K	III & IV	Passivate	SST	500	200°C	Yes	10.0
L	All	Electrodeposited nickel	SST	500	200°C	Yes	1.0
M	III & IV	Electroless or electrodeposited nickel	C	2000	200°C	Yes	3.0
N	All	Electrodeposited nickel	SST	48	200°C	Yes	1.0
R	All	Electroless nickel	AL	96	200°C	Yes	1.0
S	III & IV	Electrodeposited nickel	SST	48	200°C	Yes	1.0
T	All	Nickel fluorocarbon polymer	AL	500	175°C	Yes	2.5
U	All	Cadmium over nickel, light gold	AL	96	175°C	Yes	2.5
W	III & IV	Cadmium over nickel, olive-drab	AL	500	175°C	Yes	2.5
X	All	Cadmium over nickel, olive-drab	AL	1000	175°C	Yes	2.5
Y	III & IV	Passivate	SST	500	200°C	Yes	10.0
Z	All	Zinc nickel	AL	500	175°C	Yes	2.5

1/ Shell material: AL = aluminum alloy, CRS = cold rolled steel, SST = stainless steel, C = composite

2/ Salt spray (hours): Indicates duration hours in salt spray chamber.

3/ Conductivity of series II and IV connectors without spring fingers: 200 millivolts maximum. After conditioning, all listed values may increase 100 percent (see 3.29).

Note: The term stainless steel (SST in table XX) is used interchangeably with the term “corrosion resistant steel” in this specification.

Downloaded from http://www.everyspec.com

6.1.2 Military unique statement. This connector is military unique because it is a miniature, high density, bayonet, threaded, breach coupling, environment resisting, high shock, high vibration, high corrosion connector that uses crimp removable or fixed hermetic solder contacts. It is capable of operating at temperatures up to 200°C. It is also designed to withstand 500 hours of salt spray. This connector is the most versatile and most preferred for military applications. A full commercial substitute is not available.

6.2 Acquisition requirements. Acquisition documents should specify the following:

a. Title, number, and date of the specification.
b. Packaging requirements (see 5.1).
c. Nomenclature by class, type, finish, style, size, and PIN (see 1.3, 1.4 and 3.52).
d. Specify requirements for inclusion of contacts, sealing plugs, sealing boots and /or tools (see 1.4.2, 3.4.1, 3.4.1.2, 3.4.1.4, and 3.4.3.2).

6.3 Qualification. With respect to products requiring qualification, awards will be made only for products which are, at the time of award of contract, qualified for inclusion in Qualified Product List QPL No. 38999 whether or not such products have actually been so listed by that date. The attention of the contractors is called to these requirements, and manufacturers are urged to arrange to have the products that they propose to offer to the Federal Government tested for qualification in order that they may be eligible to be awarded contracts or orders for the products covered by this specification. Information pertaining to qualification of products may be obtained from the qualifying activity, Defense Supply Center Columbus, DLA Land and Maritime-VQ, 3990 East Broad Street, Columbus, Ohio 43218-3990. An online listing of products qualified to this specification may be found in the Qualified Products Database (QPD) at https://assist.dla.mil.

6.3.1 Copies of "Provisions Governing Qualification SD-6". Copies of "Provisions Governing Qualification SD-6" are available on the DLA Document Services' website at https://assist.dla.mil

6.4 Definitions.

Blind-mate:	A situation in which personnel wishing to mate a connector pair can neither see nor touch the connector halves being mated and must rely on some mechanism to accomplish the mating.
Conditioning:	A term used to describe the preconditioning of a component by exposure to a specified environment(s), or the preconditioning of a part through some other specified process(es). Preconditioning is intended to simulate environmental wear or aging prior to additional testing.
Environmental:	A term used to describe environment resistant / resisting electrical connectors. Connectors are provided with means such as temperature-resistant and fluid-resistant gaskets, seals and other features for protection against moisture, gases, dust, dirt or other contaminants.
Grommet:	The back section of the insert, molded from resilient silicone or fluorosilicone rubber, which provides environmental sealing around the wire or cable.
Hermetic:	A term used to describe hermetically sealed electrical connectors. Connectors have fused vitreous glass-to-metal seals to provide gas-tight or air-tight sealing, and feature fixed, permanently installed contacts with solderable terminations.
Inactive:	In this specification, some finishes or surface treatments, some insert arrangements, and some SAE-AS39029 crimp contacts are referenced as "inactive for new design". These finishes, surface treatments, insert arrangements or crimp contacts are not to be used in new design or equipment. However, inactive finishes, surface treatments, insert arrangements or crimp contacts may continue to be used to support existing designs or equipment.

Downloaded from http://www.everyspec.com

Insert: The insulating dielectric within a connector shell. The insert houses the contacts. (Note: For insert arrangements (number, spacing and arrangement of contacts) see MIL-STD-1560).

Interfacial seal: The front section of the pin insert, molded from resilient silicone or fluorosilicone rubber, which provides a moisture seal.

Lanyard release: Also called “breakaway” or “fail safe”. A plug connector with a lanyard release system is designed to separate when a specified force is applied to the lanyard. Separation is designed to take place without damaging the cable (lanyard) or the mated receptacle and plug connectors.

Mating pair: A “mating” or “mated” connector pair is a plug and receptacle with compatible shell sizes, insert arrangements and polarization (matching key/keyway rotation).

Metal-to-metal: A mated pair of series III circular connectors attain metal-to-metal bottoming when the engaging shell surface of the receptacle physically contacts (or “bottoms”) the internal engaging shell surface of the plug. Bottoming is achieved by tightening the coupling nut of the plug.

Polarization: Also called “keying” or “clocking”, polarization is the angular position of keys (plug shells) or keyways (receptacle shells) that are machined into the connector shell for compatible mating of a plug and receptacle. Polarization is intended to prevent mis-mating or cross-mating of connectors of the same size and type. For MIL-DTL-38999 connectors, a connector shell with an “alternate” polarization (as compared with the “normal” polarization) has keys or keyways rotated from the normal position.

Rear-release: A connector has “rear-release” contacts if the contact removal tool is inserted into the back end of the contact cavity in order to release the contact from the insert retention device. If a connector has a rear-release type retention system, then it will be marked with a blue band around the circumference of the connector shell.

Scoop-proof: Scoop-proof means that because of the connector long shell design, it is impossible for the mating plug connector to inadvertently be cocked into the mating receptacle and damage the pins or electrically short the contacts.

Sealing boot: A protective device that environmentally seals a cable to the electrical contact and the electrical contact to the grommet cavity within a connector insert (Note: sealing boots were referred to as “bushings” in previous revisions of this specification).

Sealing plug: A plug that is inserted to fill an unoccupied contact cavity in a connector insert. Its function is to seal unoccupied cavities in the insert of an environmental connector.

Self-locking: A design that incorporates an automatic, anti-decoupling, locking mechanism that prevents the coupling ring from disengaging under vibration.

Downloaded from http://www.everyspec.com

Service rating: For this specification, the “service rating” is based on the test voltage, which in turn, is established based on the combination of the contact sizes and the center-to-center distances between contacts in any given insert arrangement. The test voltage is not intended for the establishment of safety factors. During qualification testing and group A testing, the service rating of the fully populated connector is derived from the nondestructive, maximum voltage or current conditions, at a specified temperature or altitude, for which a connector is designed to function without breakdown. Actual operating voltages, or the maximum continuous working voltage that the product should be used at, will normally be a lower value. Operating voltages will depend on the operating conditions of the application. The operating voltage is normally approximately 1/3 of the DWV voltage. Since the user is aware of application-specific parameters such as peak voltages, switching currents, transients, and other factors, the user should establish safety factors based on the operating conditions of the application.

Shrink sleeve: Also called a “heat shrink boot”. A heat shrink sleeve is supplied with size 8, SAE AS39029/90 and /91 twinax, and with size 8, SAE-AS39029/113 and /114 twinax. Heat shrink sleeves have a temperature rating of 175°C maximum. A connector rated at 200°C max will be derated to 175°C if contacts requiring a heat shrink sleeve are used.

Space grade: Connectors that are classified as “space grade” are those connectors that are nickel plated and meet the outgassing requirements as specified herein. Note: Connectors with cadmium, tin, and zinc nickel finishes are not considered to be suitable for space applications, particularly at higher temperatures, since particles of plating material may evaporate in a vacuum environment. Evaporated particles can condense on other parts, degrading optics and creating conductive paths on electrical components, causing shorting.

Spring fingers: Spring fingers (also called “EMI bands”, “grounding springs” or “grounding fingers”) are flexible metal rings that provide shielding (electrical bonding and grounding) from EMI or RFI noise between the connector and other electrical components within a system, as well as EMI/RFI noise (such as lightning) from outside a system. MIL-DTL-38999 plug shells include spring fingers when specified.

Qualifying activity: The organizational element of the Government which grants qualification for specific product in accordance with this specification.

For additional connector definitions, see ECA EIA/ECA-622, Glossary of Electrical Connector Related Terms.)

Downloaded from http://www.everyspec.com

6.5 Applicable crimp contacts. Table XXI lists applicable pin and socket contacts for series I, II, III and IV. For connectors with removable crimp contacts, the standard power contact style designators "P" and "S" (see 1.4.2) are contacts in accordance with SAE-AS39029/56, SAE39029/57 (series II socket contacts only) and SAE-AS39029/58. Unless otherwise specified in MIL-STD-1560 for a specified insert arrangement, the above-referenced standard power contacts will be supplied with connectors with crimp contacts. Other contact styles are specified by including the appropriate contact style designators in the PIN.

TABLE XXI. Applicable crimp contacts.

SAE-AS39029 contact selection						
Contact	Power	Shielded/Coax	Twinax 2/	Thermocouple	Wirewrap	Engine 3/
Pin	AS39029/58 AS39029/107 1/ AS39029/122	AS39029/28 AS39029/60 AS39029/76 AS39029/102	AS39029/90 AS39029/113	AS39029/87	AS39029 /71	AS39029 /118
Socket	AS39029/56 AS39029/57 AS39029/106 1/ AS39029/121	AS39029/27 AS39029/59 AS39029/75 AS39029/77 AS39029/78 AS39029/103	AS39029/91 AS39029/114	AS39029/88 AS39029/89	AS39029 /72	AS39029 /117

1/ 1,500 cycles durability contacts; contact style designators "H" and "J".

2/ Application notes for size 8 concentric twinax contacts: SAE-AS39029/113 pins are intermateable with SAE-AS39029/91 sockets, and SAE-AS39029/114 sockets are intermateable with SAE-AS39029/90 pins. SAE-AS39029/113 and SAE-AS39029/114 incorporate design changes intended to improve reliability over contacts in accordance with SAE-AS39029/90 and SAE-AS39029/91. SAE-AS39029/113 and /114 contacts are designed to be more concentric and robust than SAE-AS39029/90 and /91. In addition, the contact's engaging end is preassembled for user convenience, and the socket contact's engaging end is hooded to increase durability.

3/ "Engine contacts"; options including heavy gold plated with contact style designators "G" (pin) and "U" (socket), and rhodium plated with contact style designators "R" (pin) and "M" (socket).

6.6 PIN. The PIN should be structured in accordance with applicable specification sheets and MS sheets.

6.7 Subject term (key word) listing.

Beryllium	Copper	Metal	Receptacle
Cadmium	Firewall	Nickel	Silver
Composite	Lead	Plug	Space grade

Downloaded from http://www.everyspec.com

6.8 Guidance information.

6.8.1 Regrind materials. Reference SAE-AIR4567 for guidance on regrind materials.

6.8.2 Environmentally preferable material. Environmentally preferable materials should be used to the maximum extent possible to meet the requirements of this specification.

6.8.3 Guidance on the use of alternative parts with less hazardous or nonhazardous materials. This specification provides for a number of alternative plating materials via the PIN. Users should select the PIN with the least hazardous material that meets the form, fit and function requirements of their application.

6.8.4 Guidance on performance determination of connectors. Users and suppliers of connectors should be cognizant of the fact that the lowest performing member of a connector assembly, determines the performance characteristics of the connector. Certain combinations of connector components can be selected in the PIN system of the document in such a manner as to create a connector with degraded performance. Following are just a few of the examples:

a. D38999/26KJ20PN, is a series III stainless steel plug with twin axial and coaxial contacts that may not meet the firewall requirement of the specification.
b. D38999/26KJ61HN, is a series III stainless steel plug with high durability contacts. However, the connector will be limited to 500 cycles of durability.
c. Insert arrangements using multi-axial (i.e. coax, twinax, triax, shielded) contacts should not be used in firewall applications.

6.8.5 Guidance on use of inactive documents. The term “Inactive for New Design” is defined by DoD 4120-24M, “Defense Standardization Program, Policies and Procedures, which is available at http://www.dtic.mil/whs/directives/corres/pdf/412024m.pdf. In accordance with the above-referenced policy document, an inactive document is a term applied to an existing standardization document for an item that is no longer approved for use in new designs or equipment. An inactive document can be used for procurements in support of existing designs or equipment.

6.9 Tin whisker growth. The use of alloys with tin content greater than 97 percent, by mass, may exhibit tin whisker growth problems after manufacture. Tin whiskers may occur anytime from a day to years after manufacture and can develop under typical operating conditions, on products that use such materials. Conformal coatings applied over top of a whisker-prone surface will not prevent the formation of tin whiskers. Alloys of 3 percent lead, by mass, have shown to inhibit the growth of tin whiskers. For additional information on this matter, refer to ASTM B545 (Standard Specification for Electrodeposited Coatings of Tin) (see 3.3.1.3).

6.10 Changes from previous issue. The margins of this specification are marked with vertical lines to indicate where changes from the previous issue were made. This was done as a convenience only and the Government assumes no liability whatsoever for any inaccuracies in these notations. Bidders and contractors are cautioned to evaluate the requirements of this document based on the entire content irrespective of the marginal notations and relation to the previous issue.

Downloaded from http://www.everyspec.com

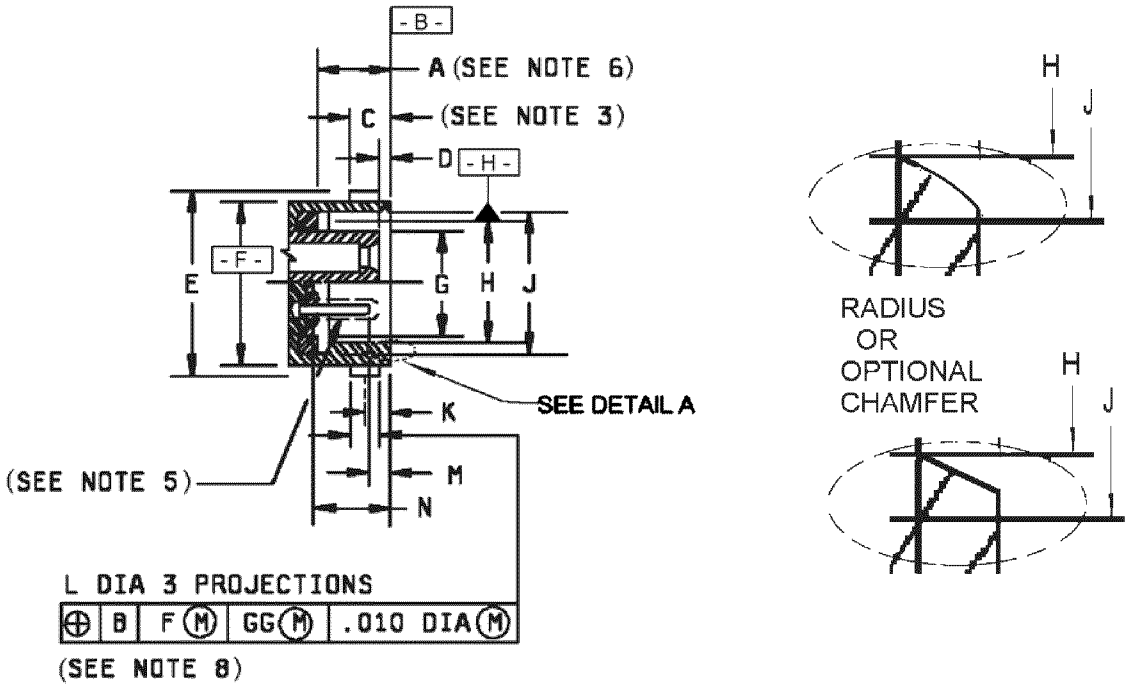

RECEPTACLE

DETAIL A

FIGURE 1. Connector intermateability dimensions (series I).

Downloaded from http://www.everyspec.com

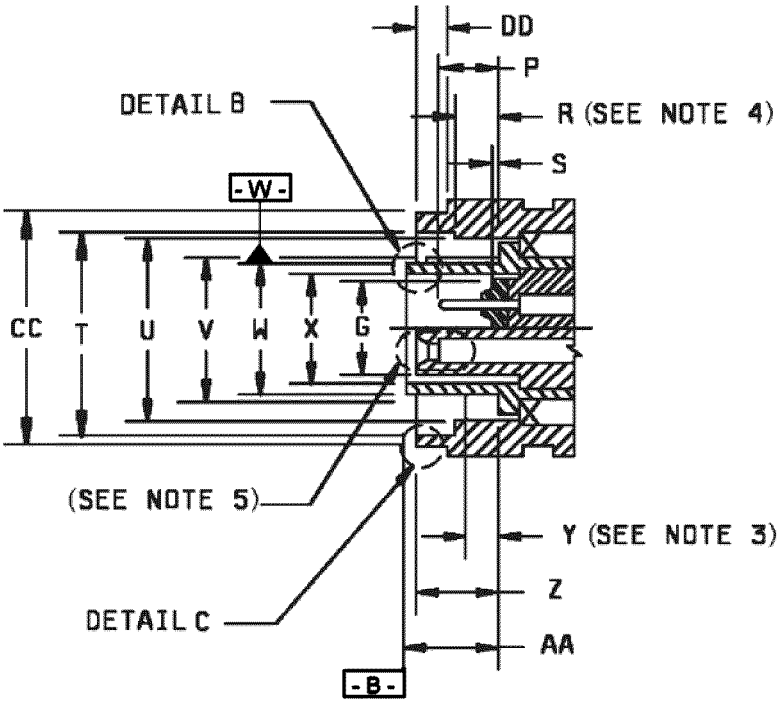

PLUG

FIGURE 1. Connector intermateability dimensions (series I) - Continued.

Downloaded from http://www.everyspec.com

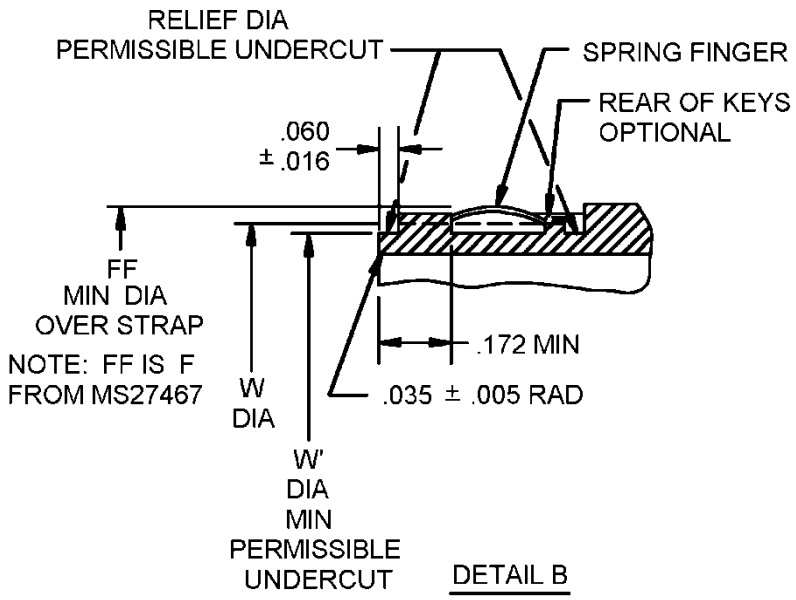

DETAIL B

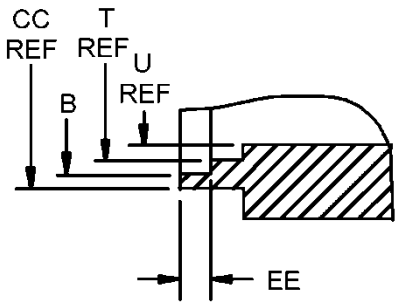

DETAIL C

NOTE: B Ø IS C Ø FROM MS27467
EE IS AA FROM MS27467

FIGURE 1. Connector intermateability dimensions (series I) - Continued.

Downloaded from http://www.everyspec.com

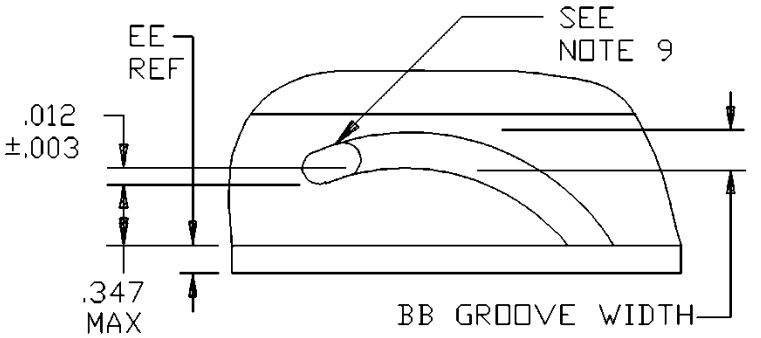

COUPLING RING
BAYONET GROOVE DETAIL
TYP 3 PLACES
GROOVES EQUALLY SPACED WITHIN .005

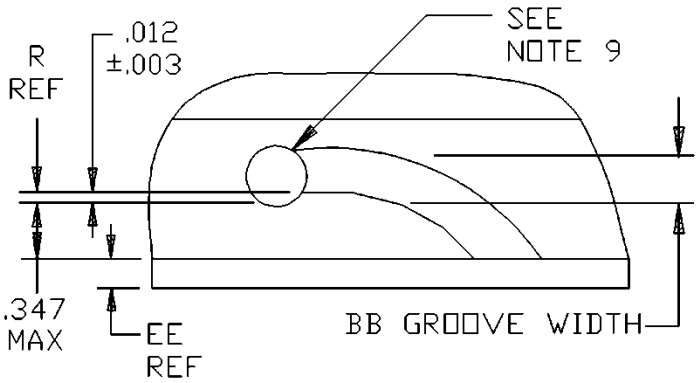

COUPLING RING
BAYONET GROOVE DETAIL
TYP 3 PLACES
GROOVES EQUALLY SPACED WITHIN .005

ALTERNATE DESIGN

FIGURE 1. Connector intermateability dimensions (series I) - Continued.

Downloaded from http://www.everyspec.com

Shell size	A gasket location	C (see note 3)	D socket insert location	E dia +.000 -.016	F dia +.001 -.005	G dia +.005 -.010
9	.569 .553	.111 max	.023 .015	.662	.572	.285
11				.810	.700	.413
13				.960	.850	.527
15				1.085	.975	.652
17				1.210	1.100	.777
19				1.317	1.207	.866
21				1.442	1.332	.991
23				1.567	1.457	1.116
25				1.692	1.582	1.241

Shell size	H dia +.005 -.001	J dia +.005 -.006	K bay location BSC	L dia +.006 -.002	M pin contact location	N pin insert location
9	.442	.492	.100	.078	.404 .368	.579 .566
11	.570	.620				
13	.687	.769				
15	.812	.894				
17	.937	1.019				
19	1.042	1.124				
21	1.167	1.249				
23	1.292	1.374				
25	1.417	1.499	.109	.125		

FIGURE 1. Connector intermateability dimensions (series I) - Continued.

Downloaded from http://www.everyspec.com

Shell size	P pin contact location	R (see note 4)	S pin insert location	T dia +.005 -.006	U dia +.005 -.001	V dia over keys +.001 -.010	W dia between keys +.001 -.005	W' dia min front of keys	X dia min
9				.674	.580	.482	.437	.417	.312
11				.822	.712	.610	.565	.545	.430
13				.972	.861	.759	.677	.657	.544
15	.228	.133	.031	1.097	.985	.884	.802	.782	.669
17	.190	.093	.016	1.222	1.110	1.009	.927	.907	.794
19				1.329	1.217	1.114	1.032	1.012	.883
21				1.454	1.342	1.239	1.157	1.137	1.008
23				1.579	1.467	1.364	1.282	1.262	1.133
25		.172 .132		1.704	1.592	1.489	1.407	1.387	1.257

Shell size	Y (see note 3)	Z socket insert location	AA shield location	BB +.016 -.001	CC dia +.011 -.000	DD +.045 -.036	B +.005 -.001	EE +.005 -.006	FF dia min
9					.780		.684		.447
11					.905		.832		.575
13					1.061		.981		.692
15	.483	.582	.597	.090	1.186	.160	1.106	.068	.817
17	min	.572	.592		1.301		1.230		.942
19					1.422		1.347		1.047
21					1.544		1.462		1.172
23					1.667		1.587		1.297
25				.137	1.793		1.712	.047	1.422

FIGURE 1. Connector intermateability dimensions (series I) – Continued.

Downloaded from http://www.everyspec.com

Inches	mm	Inches	mm	Inches	mm	Inches	mm	Inches	mm
.001	0.03	.190	4.83	.662	16.81	.981	24.92	1.262	32.05
.002	0.05	.228	5.79	.672	17.07	.985	25.02	1.282	32.56
.003	0.08	.285	7.24	.674	17.12	.991	25.17	1.292	32.82
.004	0.10	.315	8.00	.677	17.20	1.009	25.63	1.297	32.99
.005	0.13	.347	8.81	.684	17.37	1.011	25.68	1.301	33.05
.006	0.15	.368	9.35	.687	17.45	1.012	25.70	1.317	33.45
.007	0.18	.404	10.26	.692	17.58	1.019	25.88	1.329	33.76
.008	0.20	.413	10.49	.700	17.78	1.032	26.21	1.332	33.83
.010	0.25	.417	10.59	.712	18.08	1.042	26.47	1.342	34.09
.011	0.28	.433	11.00	.759	19.28	1.047	26.59	1.347	34.21
.012	0.30	.437	11.10	.769	19.53	1.061	26.95	1.364	34.65
.015	0.38	.442	11.23	.777	19.74	1.085	27.56	1.374	34.90
.016	0.41	.447	11.35	.780	19.81	1.097	27.86	1.387	35.23
.023	0.58	.482	12.24	.782	19.86	1.100	27.94	1.407	35.74
.024	0.61	.483	12.27	.797	20.24	1.106	28.09	1.417	35.99
.030	0.76	.492	12.50	.802	20.37	1.110	28.19	1.422	36.12
.031	0.79	.527	13.39	.810	20.57	1.114	28.30	1.442	36.63
.035	0.89	.545	13.84	.812	20.62	1.116	28.35	1.454	36.93
.036	0.91	.547	13.89	.817	20.75	1.124	28.55	1.457	37.01
.045	1.14	.553	14.05	.822	20.88	1.136	28.85	1.462	37.13
.047	1.19	.565	14.35	.832	21.13	1.137	28.88	1.467	37.26
.060	1.52	.566	14.38	.850	21.59	1.157	29.39	1.489	37.82
.068	1.73	.569	14.45	.861	21.87	1.167	29.64	1.499	38.07
.078	1.98	.570	14.48	.866	22.00	1.172	29.77	1.544	39.22
.090	2.29	.572	14.53	.884	22.45	1.186	30.12	1.567	39.22
.093	2.36	.575	14.61	.886	22.50	1.207	30.66	1.579	40.11
.100	2.54	.579	14.71	.894	22.71	1.210	30.73	1.582	40.18
.109	2.77	.580	14.73	.905	22.99	1.217	30.91	1.587	40.31
.111	2.82	.582	14.78	.907	23.04	1.222	31.04	1.592	40.44
.125	3.18	.592	15.04	.927	23.55	1.230	31.24	1.667	42.34
.132	3.35	.597	15.16	.937	23.80	1.239	31.47	1.692	42.98
.133	3.38	.610	15.49	.942	23.93	1.241	31.52	1.704	43.28
.137	3.48	.620	15.75	.960	24.38	1.249	31.72	1.712	43.48
.160	4.06	.652	16.56	.972	24.69	1.260	32.00	1.793	45.54
.172	4.37	.657	16.69	.975	24.77				

NOTES:

1. Dimensions are in inches.
2. Metric equivalents are given for information only.
3. A point at which a gauge pin, having the same basic diameter as the mating contact and a square face touches socket contact spring.
4. Distance from plug shell shoulder to locking point of coupling ring.
5. Details "A" (socket entry) and "B" (pin barrier) on figure 13 apply to plugs and receptacles.
6. "A" initial contact with static seal.

FIGURE 1. Connector intermateability dimensions (series I) - Continued.

Downloaded from http://www.everyspec.com

7. The least amount of electrical engagement occurs when the insert faces are at their minimum interference location. When this condition exists, the coupling spring force shall be sufficient to guarantee .024 inch (0.61 mm) compression of the peripheral sealing gasket. Minimum electrical contact engagement is therefore computed with the peripheral sealing gasket compressed .024 inch (0.61 mm) from its MMC position.
8. Receptacle keyway gauge features for GG shall be .010 inch (0.254 mm) smaller than their MMC at basic location (see main key/keyway polarization detail on figure 5 and applicable MS sheets).
9. Three holes (design optional) equally spaced within .010 inch (0.25 mm) shall be given for visual inspection of lock when mated with receptacle.
10. Insert front surface shall be flat within .005 inch (0.13 mm) TIR.
11. Diameters F and H shall be concentric within .015 inch (0.38 mm) TIR.
12. Diameter F with respect to diameter E and diameter H with respect to diameter J shall be concentric at MMC.
13. Diameters H and G shall be concentric within .005 inch (0.13 mm) TIR at MMC.
14. Diameter W with respect to diameter V shall be concentric at MMC.
15. Diameters U and T shall be concentric within .008 inch (0.20 mm) TIR.
16. Diameter CC to be concentric to U within .005 inch (0.13 mm) TIR.
17. Radius shall be .016 in (0.4 mm) minimum, or optional chamfer shall be .007 in (0.18 mm) X 45° ± 5° angle minimum. When the receptacle is mated to the plug, the radius or chamfer shall neither damage the plug's EMI bands nor impede EMI sealing.

FIGURE 1. Connector intermateability dimensions (series I) - Continued.

Downloaded from http://www.everyspec.com

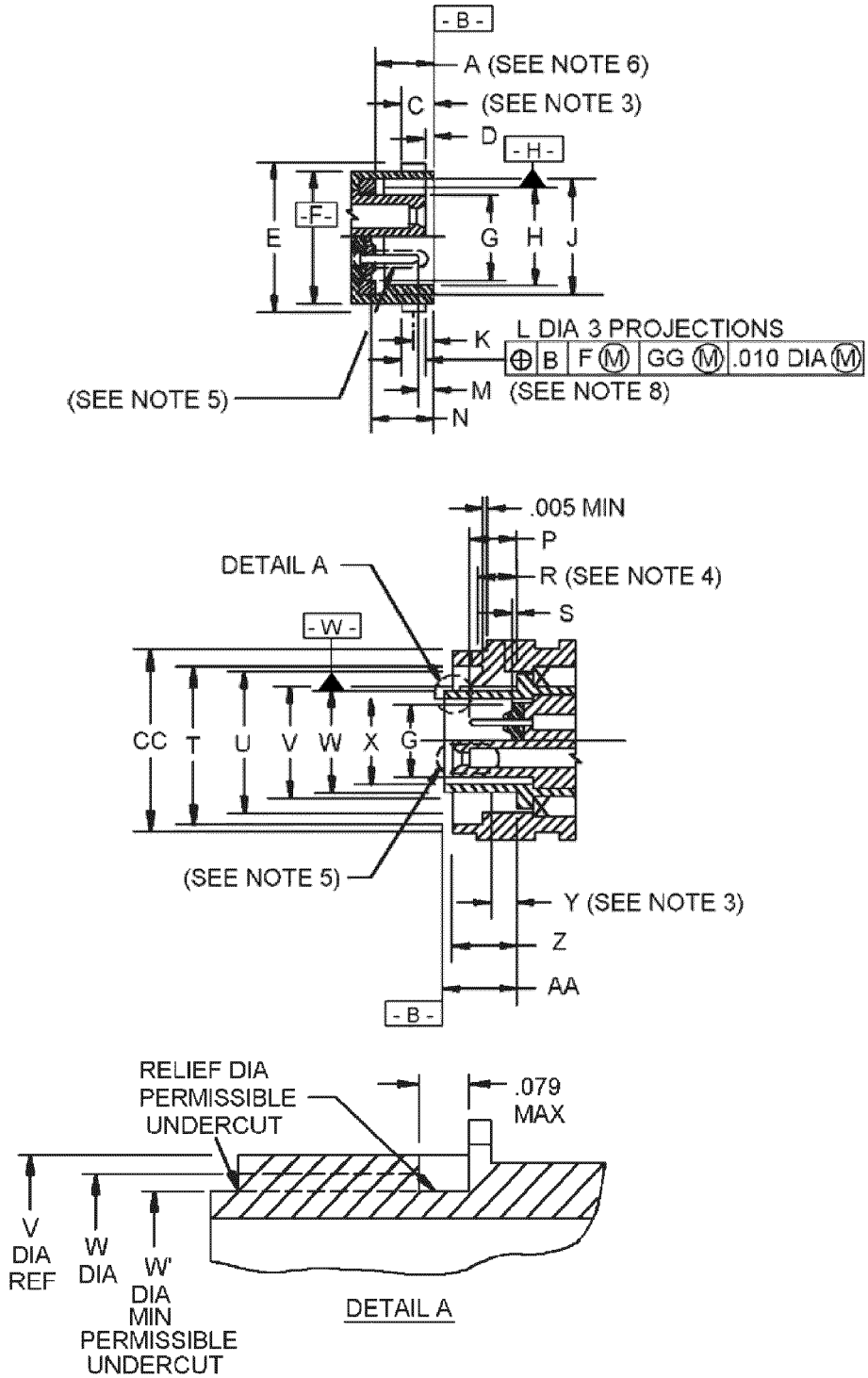

RECEPTACLE (TOP VIEW) AND PLUG (MIDDLE VIEW)

FIGURE 2. Connector intermateability dimensions (series II).

Downloaded from http://www.everyspec.com

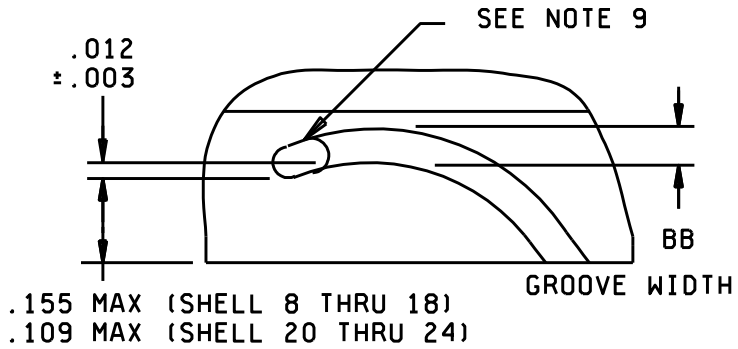

COUPLING RING
BAYONET GROOVE DETAIL
TYP 3 PLACES
GROOVES EQUALLY SPACED WITHIN .005

Shell size	A gasket location	C (see note 3)	D socket insert location	E dia +.000 -.016	F dia +.001 -.005	G dia +.005 -.010	H dia +.005 -.001
8	.232 .216	.111 max	.023 .015	.563	.473	.285	.362
10				.680	.590	.413	.490
12				.859	.750	.527	.607
14				.984	.875	.652	.732
16				1.108	1.000	.777	.857
18				1.233	1.125	.866	.962
20				1.358	1.250	.991	1.087
22				1.483	1.375	1.116	1.212
24				1.610	1.500	1.241	1.337

FIGURE 2. Connector intermateability dimensions (series II) - Continued.

Downloaded from http://www.everyspec.com

Shell size	J dia +.005 -.006	K bay location BSC	L dia +.006 -.002	M pin contact location	N pin insert location	P pin contact location
8	.412	.078	.078	.067 .031	.241 .228	.228 .190
10	.540					
12	.689					
14	.814					
16	.939					
18	1.039					
20	1.164		.125			
22	1.289					
24	1.414					

Shell size	R (see note 4)	S pin insert location	T dia +.005 -.006	U dia +.005 -.001	V dia over keys +.001 -.010	W dia between keys +.001 -.005	W' dia min front of keys
8	.116 .076	.031 .016	.576	.481	.402	.357	.337
10			.697	.602	.530	.485	.465
12			.871	.761	.679	.597	.557
14			.995	.885	.804	.722	.702
16			1.120	1.010	.929	.847	.827
18			1.245	1.136	1.029	.947	.927
20	.143 .103		1.370	1.260	1.154	1.072	1.052
22			1.495	1.385	1.279	1.197	1.177
24			1.624	1.510	1.404	1.322	1.302

FIGURE 2. Connector intermateability dimensions (series II) - Continued.

Downloaded from http://www.everyspec.com

Shell size	X dia min	Y (see note 3)	Z soc ins loc	AA shield location	BB +.016 -.001	CC dia +.000 -.006
8	.306	.146 min	.244 .234	.260 .256	.090	.630
10	.423					.752
12	.537					.925
14	.662					1.050
16	.787					1.172
18	.876					1.304
20	1.001				.137	1.435
22	1.126					1.560
24	1.251					1.688

FIGURE 2. Connector intermateability dimensions (series II) - Continued.

Downloaded from http://www.everyspec.com

Inches	mm	Inches	mm	Inches	mm	Inches	mm	Inches	mm
.001	0.03	.234	5.94	.607	15.42	.927	23.55	1.212	30.78
.002	0.05	.241	6.12	.630	16.00	.929	23.60	1.233	31.32
.003	0.08	.244	6.20	.652	16.56	.939	23.85	1.241	31.52
.005	0.13	.256	6.50	.662	16.81	.947	24.05	1.245	31.62
.006	0.15	.260	6.60	.679	17.25	.962	24.43	1.250	31.75
.010	0.25	.285	7.24	.680	17.27	.984	24.99	1.251	31.78
.012	0.30	.306	7.77	.689	17.50	.991	25.17	1.260	32.00
.015	0.38	.337	8.56	.697	17.70	.995	25.27	1.279	32.49
.016	0.41	.357	9.07	.702	17.83	1.000	25.40	1.289	32.74
.023	0.58	.362	9.19	.722	18.34	1.001	25.43	1.302	33.07
.031	0.79	.402	10.21	.732	18.59	1.010	25.65	1.304	33.12
.067	1.70	.412	10.46	.750	19.05	1.029	26.14	1.322	33.58
.076	1.93	.413	10.49	.752	19.10	1.039	26.39	1.337	33.96
.078	1.98	.423	10.74	.761	19.33	1.050	26.67	1.358	34.49
.079	2.01	.465	11.81	.777	19.74	1.052	26.72	1.370	34.80
.090	2.29	.473	12.01	.787	19.99	1.072	27.23	1.375	34.93
.103	2.62	.481	12.22	.804	20.42	1.087	27.61	1.385	35.18
.109	2.77	.485	12.32	.814	20.68	1.108	28.14	1.404	35.66
.111	2.82	.490	12.45	.827	21.01	1.116	28.35	1.414	35.92
.116	2.95	.527	13.39	.847	21.51	1.120	28.45	1.435	36.45
.125	3.18	.530	13.46	.857	21.77	1.125	28.58	1.483	37.67
.137	3.48	.537	13.64	.859	21.82	1.126	28.60	1.495	37.97
.143	3.63	.540	13.72	.866	22.00	1.136	28.85	1.500	38.10
.146	3.71	.557	14.15	.871	22.12	1.154	29.31	1.510	38.35
.155	3.94	.563	14.30	.875	22.23	1.164	29.57	1.560	39.62
.190	4.83	.576	14.63	.876	22.25	1.172	29.77	1.610	40.89
.216	5.49	.590	14.99	.885	22.48	1.177	29.90	1.624	41.25
.228	5.79	.597	15.16	.925	23.50	1.197	30.40	1.688	42.88
.232	5.89	.602	15.29						

NOTES:
1. Dimensions are in inches.
2. Metric equivalents are given for information only.
3. A point at which a gauge pin, having the same basic diameter as the mating contact and a square face, touches socket contact spring.
4. Distance from plug shell shoulder to locking point of coupling ring.
5. Details “A” (socket entry) and “B” (pin barrier) on figure 13 apply to both plugs and receptacles.
6. “A” initial contact with static seal.
7. The least amount of electrical engagement occurs when the insert faces are at their minimum interference location. When this condition exists, the coupling spring force shall be sufficient to guarantee .024 inch (0.61 mm) compression of the peripheral sealing gasket. Minimum electrical contact engagement is therefore computed with the peripheral sealing gasket compressed .024 inch (0.61 mm) from its MMC position.
8. Receptacle keyway gauge features for GG shall be .004 inch (0.10 mm) smaller for shell size 8 and .010 inch (0.25 mm) smaller for shell sizes 10 through 24 at MMC (see main key/keyway polarization detail on figure 5 and applicable MS sheets).

FIGURE 2. Connector intermateability dimensions (series II) - Continued.

Downloaded from http://www.everyspec.com

9. Three holes (design optional) equally spaced within .010 inch (0.25 mm) shall be provided for visual inspection of lock when mated with receptacle.
10. Insert front surface shall be flat within .005 inch (0.13 mm) TIR.
11. Diameters F and H shall be concentric within .015 inch (0.38 mm) TIR.
12. Diameter F with respect to diameter E and diameter H with respect to diameter J shall be concentric at MMC.
13. Diameters H and G shall be concentric with .005 inch (0.13 mm) TIR at MMC.
14. Diameter W with respect to diameter V shall be concentric at MMC.
15. Diameters U and T shall be concentric within .008 inch (0.20 mm) TIR.
16. Diameter CC shall be concentric to U within .005 (0.13 mm) TIR.

FIGURE 2. Connector intermateability dimensions (series II) - Continued.

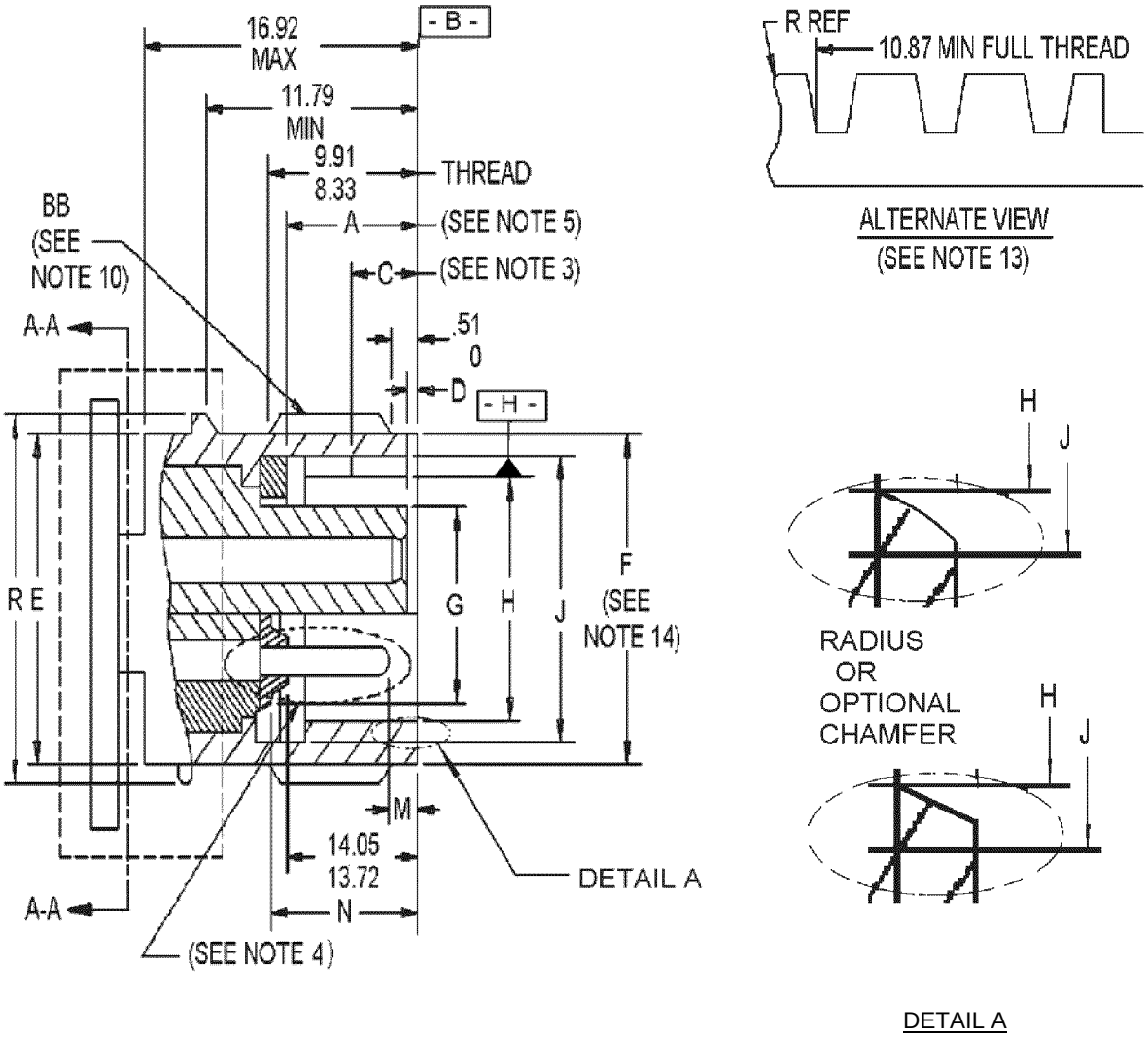

FIGURE 3. Connector intermateability dimensions (series III).

Downloaded from http://www.everyspec.com

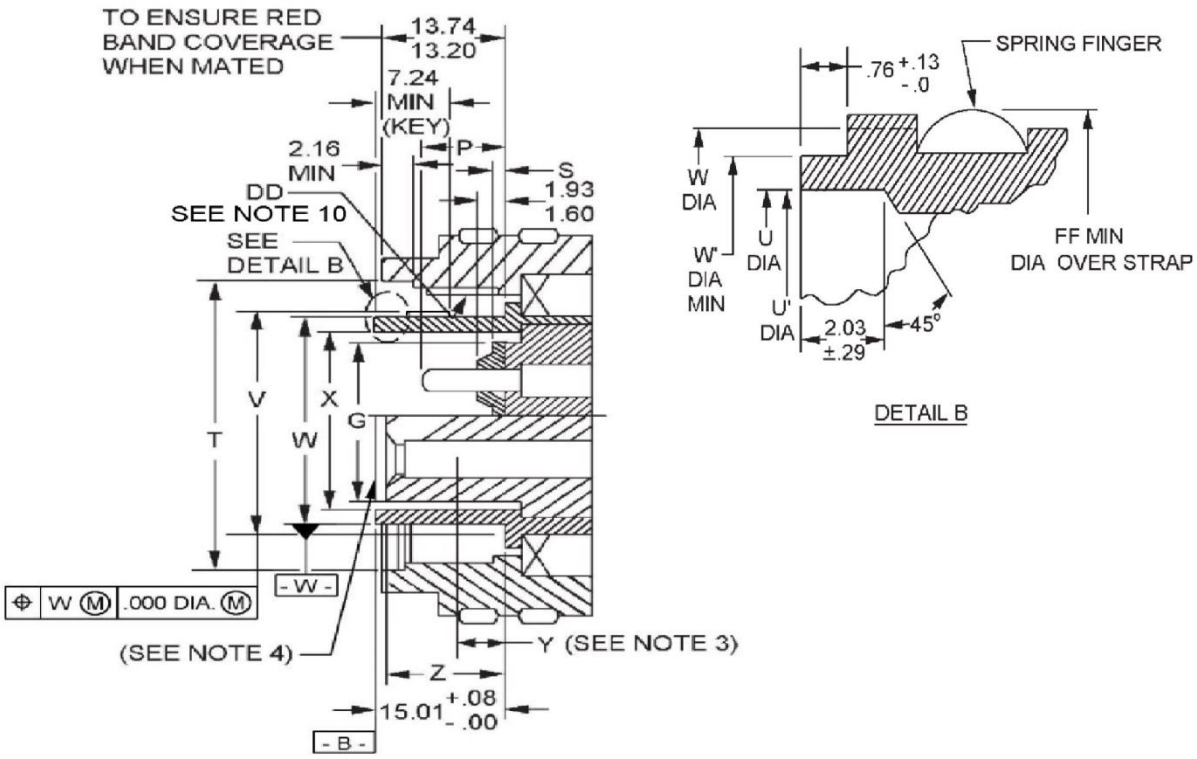

PLUG

FIGURE 3. Connector intermateability dimensions (series III) - Continued.

Downloaded from http://www.everyspec.com

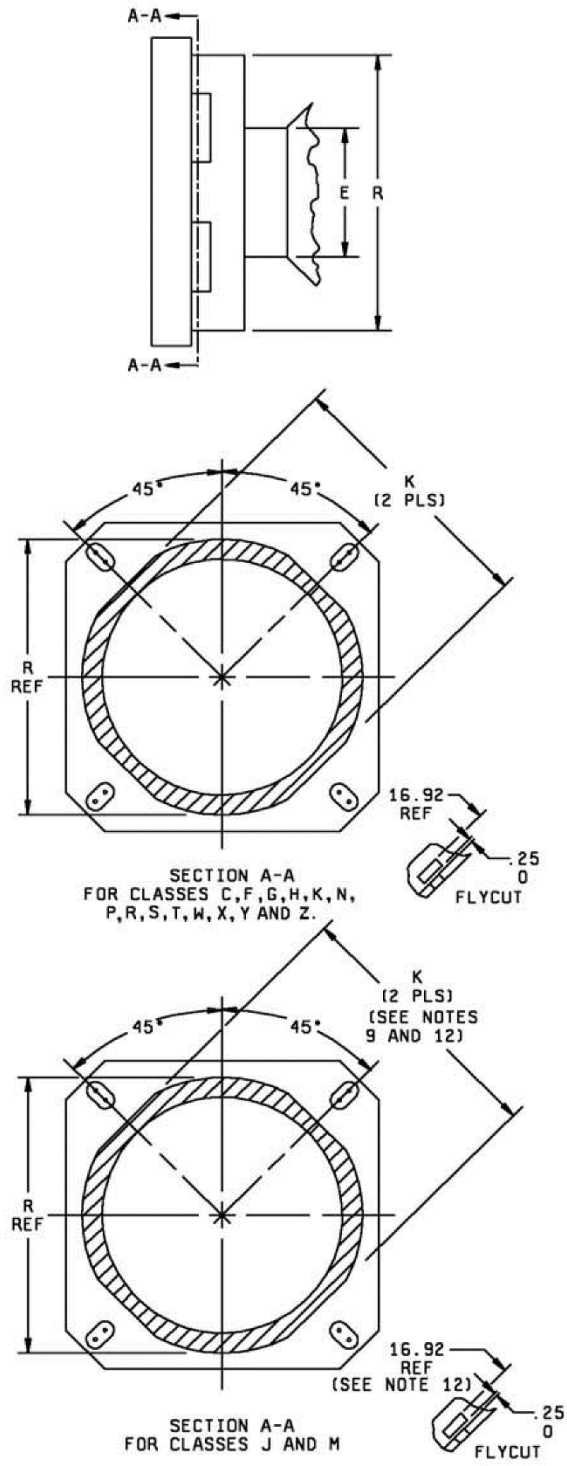

FIGURE 3. Connector intermateability dimensions (series III) - Continued.

Downloaded from http://www.everyspec.com

Shell size	A Gasket location	C (see note 3)	D Socket insert location	E dia max	F dia
9	14.73 14.50	3.25 max	0.94 0.64	14.55	14.42 14.14
11				17.73	17.60 17.32
13				20.90	20.77 20.49
15				24.08	23.95 23.67
17				28.52	28.30 27.97
19				30.12	29.89 29.56
21				33.30	33.07 32.74
23				36.47	36.24 35.91
25				39.65	39.42 39.02

FIGURE 3. Connector intermateability dimensions (series III) - Continued.

Downloaded from http://www.everyspec.com

Shell size	FF dia min	G dia +.13 -.25	H dia (except classes J & M)	H dia (classes J & M only)	J dia (except classes J & M)	J dia (classes J & M only)
9	11.48	7.24	11.36 11.20	11.43 11.20	12.63 12.34	12.70 12.34
11	14.73	10.49	14.61 14.45	14.68 14.45	15.88 15.60	15.95 15.60
13	17.58	13.39	17.45 17.30	17.52 17.30	19.66 19.38	19.73 19.38
15	20.75	16.56	20.63 20.44	20.70 20.44	22.84 22.56	22.91 22.56
17	23.92	19.74	23.80 23.64	23.87 23.64	26.01 25.73	26.08 25.73
19	26.59	22.00	26.47 26.31	26.54 26.31	28.63 28.40	28.70 28.40
21	29.77	25.17	29.64 29.49	29.71 29.49	31.85 31.57	31.92 31.57
23	32.94	28.35	32.82 32.66	32.89 32.66	35.03 34.75	35.10 34.75
25	36.12	31.52	35.99 35.84	36.06 35.84	38.20 37.92	38.27 37.92

FIGURE 3. Connector intermateability dimensions (series III) - Continued.

Downloaded from http://www.everyspec.com

Shell size	K max	M pin contact location	N pin insert location	P pin contact location	R dia max	S pin insert location	T dia +.25 -.03
9	11.84				15.88		16.51
11	15.01				19.05		19.69
13	19.08				22.23		22.86
15	22.25	10.54	15.46	6.15	25.40	0.65	26.04
17	25.43	9.50	15.04	5.11	30.16	0.24	30.89
19	28.60				31.75		32.49
21	31.78				34.73		35.66
23	34.95				38.10		38.84
25	38.13				41.28		42.01

Shell size	U dia min/max	U dia +.13 -.03	U' dia min	V dia over keys	W dia between keys (except classes J & M)	W dia between keys (classes J & M only)	W' dia min front of keys	X dia min	Y (see note 3)	Z socket insert location
9	9.96 9.55	9.83	8.51	12.27 11.99	11.13 10.97	11.13 10.85	10.59	7.92		
11	13.19 12.61	13.06	11.74	15.52 15.24	14.38 14.22	14.38 14.10	13.84	10.92		
13	16.08 15.45	15.95	14.63	19.31 19.02	17.22 17.07	17.22 16.95	16.68	13.81		
15	19.26 18.63	19.13	17.81	22.48 22.20	20.40 20.24	20.40 20.12	19.86	16.99	12.45 min	15.06 14.76
17	22.43 21.80	22.30	20.98	25.66 25.37	23.57 23.42	23.57 23.30	23.03	20.16		
19	24.82 24.47	24.69	23.57	28.32 28.04	26.24 26.09	26.24 25.97	25.70	22.42		
21	27.99 27.64	27.86	26.74	31.50 31.22	29.42 29.26	29.42 29.14	28.87	25.60		
23	31.17 30.82	31.04	29.92	34.67 34.39	32.59 32.44	32.59 32.32	32.05	28.77		
25	34.34 33.99	34.21	33.09	37.85 37.57	35.77 35.61	35.77 35.49	35.22	31.92		

FIGURE 3. Connector intermateability dimensions (series III) - Continued.

Downloaded from http://www.everyspec.com

BB thread (plated or finished) (see notes 10 and 17)										
Shell size	Designation				External thread limits of size class 2A					
	Thread size	Pitch	Lead	Allowance (see note 18)	Major diameter		Pitch diameter		Minor diameter	
					Limits tolerance is .0080		Limits tolerance is .0080		Limits	
					max	min	max	min	max	min
9	.6250	.1	.3	.0015	.6235	.6155	.5975	. 5895	.5675	.5535
11	.7500				.7485	.7405	.7225	. 7145	.6925	.6785
13	.8750				.8735	.8655	.8475	.8395	.8175	.8035
15	1.0000				.9985	.9905	.9725	.9645	.9425	.9285
Shell size	Thread size	Pitch	Lead	Allowance (see note 18)	Major diameter		Pitch diameter		Minor diameter	
					Limits tolerance is .0120		Limits tolerance is .0100		Limits	
					max	min	max	min	max	min
17	1.1875	.1	.3	.0020	1.1855	1.1735	1.1515	1.1415	1.1135	1.0955
19	1.2500				1.2480	1.2360	1.2140	1.2040	1.1760	1.1580
21	1.3750				1.3730	1.3610	1.3390	1.3290	1.3010	1.2830
23	1.500				1.4980	1.4860	1.4640	1.4540	1.4260	1.4080
25	1.625				1.6230	1.6110	1.5890	1.5790	1.5510	1.5330

FIGURE 3. Connector intermateability dimensions (series III) – Continued.

Downloaded from http://www.everyspec.com

DD thread (plated) (see notes 10 and 17)									
Shell size	Designation			Internal thread limits of size class 2B					
	Thread size	Pitch	Lead	Minor diameter		Pitch diameter		Major diameter	
				Limits tolerance is .0100		Limits tolerance is .0100		Limits	
				min	max	min	max	min	max
9	.6250	.1	.3	.5792	.5892	.5990	.6090	.6290	.6450
11	.7500			.7042	.7142	.7240	.7340	.7540	.7700
13	.8750			.8292	.8392	.8490	.8590	.8790	.8950
15	1.0000			.9542	.9642	.9740	.9840	1.0040	1.0200
Shell size	Thread size	Pitch	Lead	Minor diameter		Pitch diameter		Major diameter	
				Limits tolerance is .0120		Limits tolerance is .0120		Limits	
				min	max	min	max	min	max
17	1.1875	.1	.3	1.1274	1.1394	1.1535	1.1655	1.1915	1.2115
19	1.2500			1.1900	1.2020	1.2160	1.2280	1.2540	1.2740
21	1.3750			1.3150	1.3270	1.3410	1.3530	1.3790	1.3990
23	1.5000			1.4400	1.4520	1.4660	1.4780	1.5040	1.5240
25	1.6250			1.5650	1.5770	1.5910	1.6030	1.6290	1.6490

FIGURE 3. Connector intermateability dimensions (series III) – Continued.

Downloaded from http://www.everyspec.com

NOTES:

1. Dimensions are in millimeters (except coupling threads).
2. Inch equivalents are given for general information only.
3. A point at which a gauge pin, having the same basic diameter as the mating contact and a square face, touches socket contact spring.
4. Details "A" (socket entry) and "B" (pin barrier) on figure 14 apply to both plugs and receptacles.
5. "A" initial contact with static seal.
6. Insert front surface shall be flat within 0.13 mm TIR.
7. Diameters “H” and “G” shall be concentric within 0.13 mm TIR at MMC.
8. Diameter “W” with respect to diameter V shall be concentric at MMC.
9. Dimension “K” is for clearance of mounting screw heads.
10. Thread approach modified to eliminate cross-threading.
11. Receptacle coupling threads may have modified minor diameters.
12. Flycuts are an optional design for composite.
13. The "E" dimension does not apply.
14. Witness marks as result of threading are permissible on "F" diameter.
15. Diameter “W” (dia between keys) is for metallic and composite plugs, diameter “W’ (W prime min – dia front of keys)” is for metallic and composite plugs, diameter “U” is for metallic plugs, and diameter “U’ (U prime min)” is for composite plugs.
16. Red band location is critical. Dimensional verification of red band location is performed in Group A Inspection.
17. Threads are modified 60° stub configuration.
18. Gauges for plated threads: Maximum gauging limits of class 2A threads which are plated, are increased by the allowance. Unplated threads, for example class K, may be checked with standard after plate gauges.
19. Radius shall be 0.4 mm (.016 in) minimum, or optional chamfer shall be 0.18 mm (.007 in) X 45° ± 5° angle minimum. When the receptacle is mated to the plug, the radius or chamfer shall neither damage the plug's EMI band nor impede EMI sealing.
20. For shell size code used for part numbering, see table I.

FIGURE 3. Connector intermateability dimensions (series III) – Continued.

Downloaded from http://www.everyspec.com

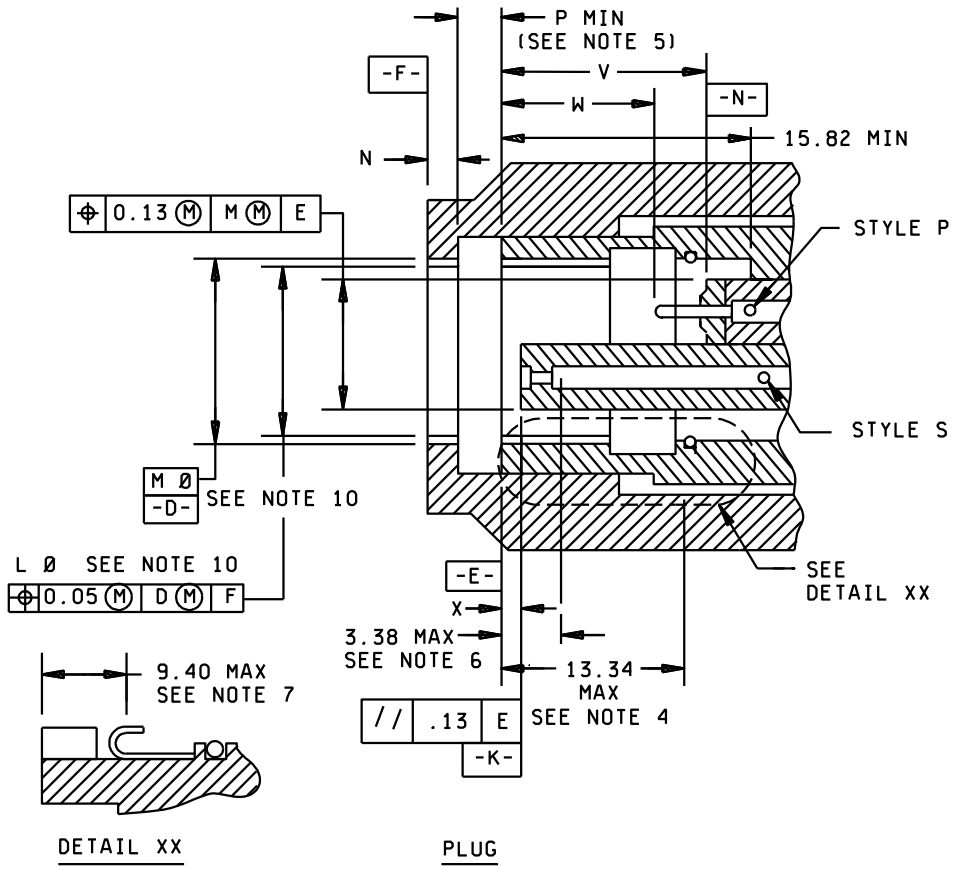

NOTE: Detail XX applicable to EMI grounding plug only.

mm	Inches
0.05	.002
0.13	.005
3.38	.113
13.34	.525
15.82	.623

FIGURE 4. Connector intermateability dimensions (series IV).

Downloaded from http://www.everyspec.com

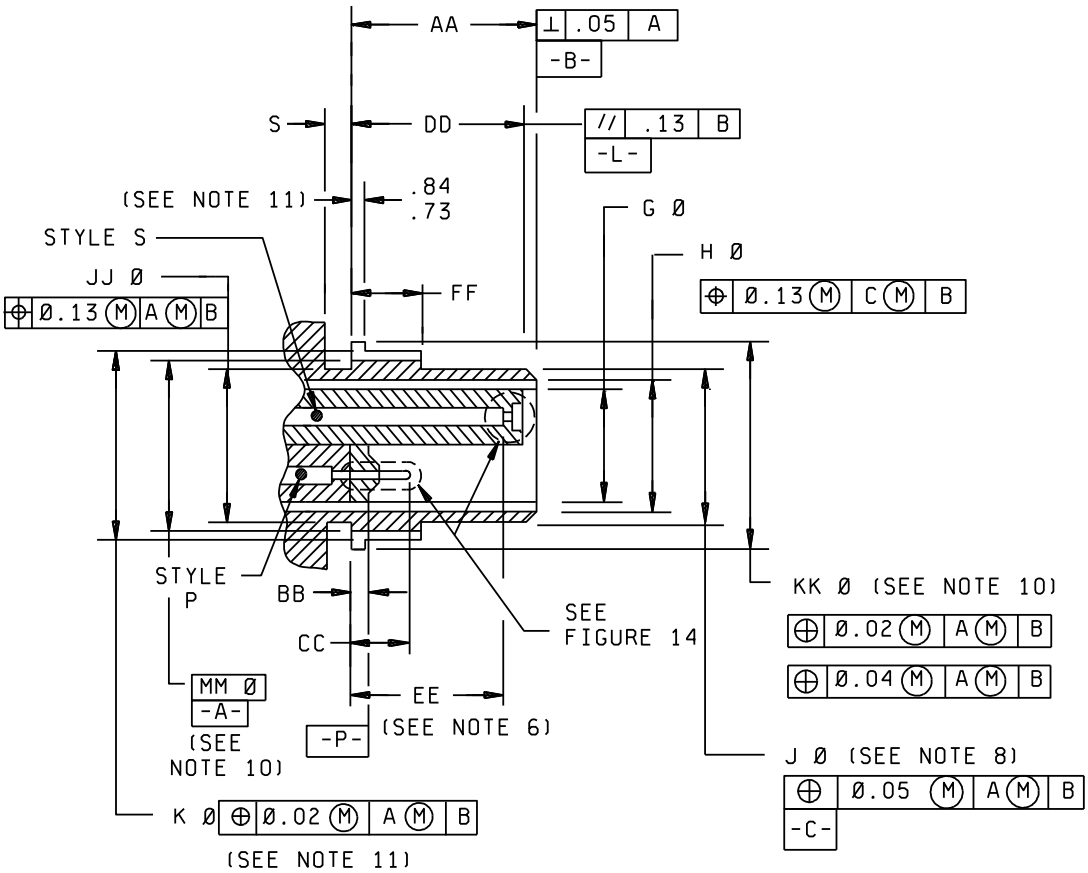

RECEPTACLE

mm	Inches
0.02	.001
0.04	.002
0.05	.002
0.11	.004
0.13	.005
0.73	.029
0.84	.033

FIGURE 4. Connector intermateability dimensions (series IV) - Continued.

Downloaded from http://www.everyspec.com

Receptacle								
Shell size code (see note 12)	Shell size	AA	G dia	BB pin Insert location	CC pin contact location	DD socket Insert location	EE min	FF
B	11	17.15 (.675) 16.99 (.669)	10.62 (.418) 10.36 (.408)	2.08 (.082) 1.71 (.067)	7.09 (.279) 6.12 (.241)	16.03 (.631) 15.81 (.622)	13.46 (.530)	7.02 (.276) 6.85 (.270)
C	13		13.52 (.532) 13.25 (.522)					
D	15		16.69 (.657) 16.43 (.647)					
E	17		19.87 (.782) 19.60 (.772)					
F	19	16.90 (.665) 16.73 (.659)	22.13 (.871) 21.86 (.861)	1.85 (.073) 1.46 (.057)	6.84 (.269) 5.86 (.231)	15.78 (.621) 15.55 (.612)	13.20 (.520)	6.76 (.266) 6.60 (.260)
G	21		25.30 (.996) 25.04 (.986)					
H	23		28.48 (1.121) 28.21 (1.111)					
J	25		31.65 (1.246) 31.39 (1.236)					

FIGURE 4. Connector intermateability dimensions (series IV) - Continued.

Downloaded from http://www.everyspec.com

Receptacle				
Shell size code (see note 12)	Shell size	H dia min	J dia	JJ dia
B	11	10.74 (.423)	12.93 (.509) 12.77 (.503)	13.09 (.515) 12.97 (.511)
C	13	13.63 (.537)	16.10 (.634) 15.94 (.628)	16.51 (.650) 16.39 (.645)
D	15	16.81 (.662)	19.28 (.759) 19.12 (.753)	19.69 (.775) 19.57 (.770)
E	17	19.98 (.787)	22.48 (.885) 22.32 (.879)	22.89 (.901) 22.77 (.896)
F	19	22.25 (.876)	25.63 (1.009) 25.47 (1.003)	25.79 (1.015) 25.67 (1.011)
G	21	25.42 (1.001)	28.80 (1.134) 28.64 (1.128)	28.96 (1.140) 28.84 (1.135)
H	23	28.60 (1.126)	31.98 (1.259) 31.82 (1.253)	32.14 (1.265) 32.02 (1.261)
J	25	31.77 (1.251)	35.15 (1.384) 35.00 (1.378)	35.31 (1.390) 35.19 (1.385)

FIGURE 4. Connector intermateability dimensions (series IV) - Continued.

Downloaded from http://www.everyspec.com

Receptacle				
Shell size code (see note 12)	Shell size	S	K dia	KK dia
B	11	2.52 (.099) 2.38 (.094)	14.99 (.590) 14.89 (.586)	16.26 (.640) 16.16 (.636)
C	13		18.32 (.721) 18.22 (.717)	19.33 (.761) 19.23 (.757)
D	15		21.47 (.845) 21.37 (.841)	22.48 (.885) 22.38 (.881)
E	17		24.64 (.970) 24.54 (.966)	25.66 1.010) 25.56 (1.006)
F	19	2.77 (.109) 2.64 (.104)		27.67 (1.089) 27.57 (1.085)
G	21			30.84 (1.214) 30.74 (1.210)
H	23			34.12 (1.343) 34.02 (1.339)
J	25			37.34 (1.470) 37.24 (1.466)

FIGURE 4. Connector intermateability dimensions (series IV) - Continued.

Downloaded from http://www.everyspec.com

Plug						
Shell size code (see note 12)	Shell size	N	P min	V pin insert location	W pin contact location	X socket insert location
B	11	2.37 (.093) 2.26 (.089)	4.08 (.161)	15.14 (.596) 14.73 (.580)	10.72 (.422) 9.70 (.382)	1.05 (.041) 0.76 (.030)
C	13					
D	15					
E	17					
F	19	2.62 (.103) 2.51 (.099)	3.83 (.151)			
G	21					
H	23					
J	25					

NOTES:
1. Dimensions are in millimeters.
2. Inch equivalents are given for information only.
3. Inch equivalents are in parentheses.
4. Initial contact with static seal.
5. Unmated dimensions.
6. A point at which a gauge pin, having the same basic diameter as the mating contact and a square face, touches socket contact spring.
7. A point at which a gauge, having the same basic diameter as the mating receptacle shell, and a square face, touches the RFI spring.
8. Sealing/grounding surface.
9. Applies to sizes 19 through 25.
10. For diameters "L", "M", and "MM" see main key/keyway polarization figure (see figure 7).
11. Applies to shell sizes 11 through 17.
12. For shell size code used for part numbering, see table I.

FIGURE 4. Connector intermateability dimensions (series IV) - Continued.

Downloaded from http://www.everyspec.com

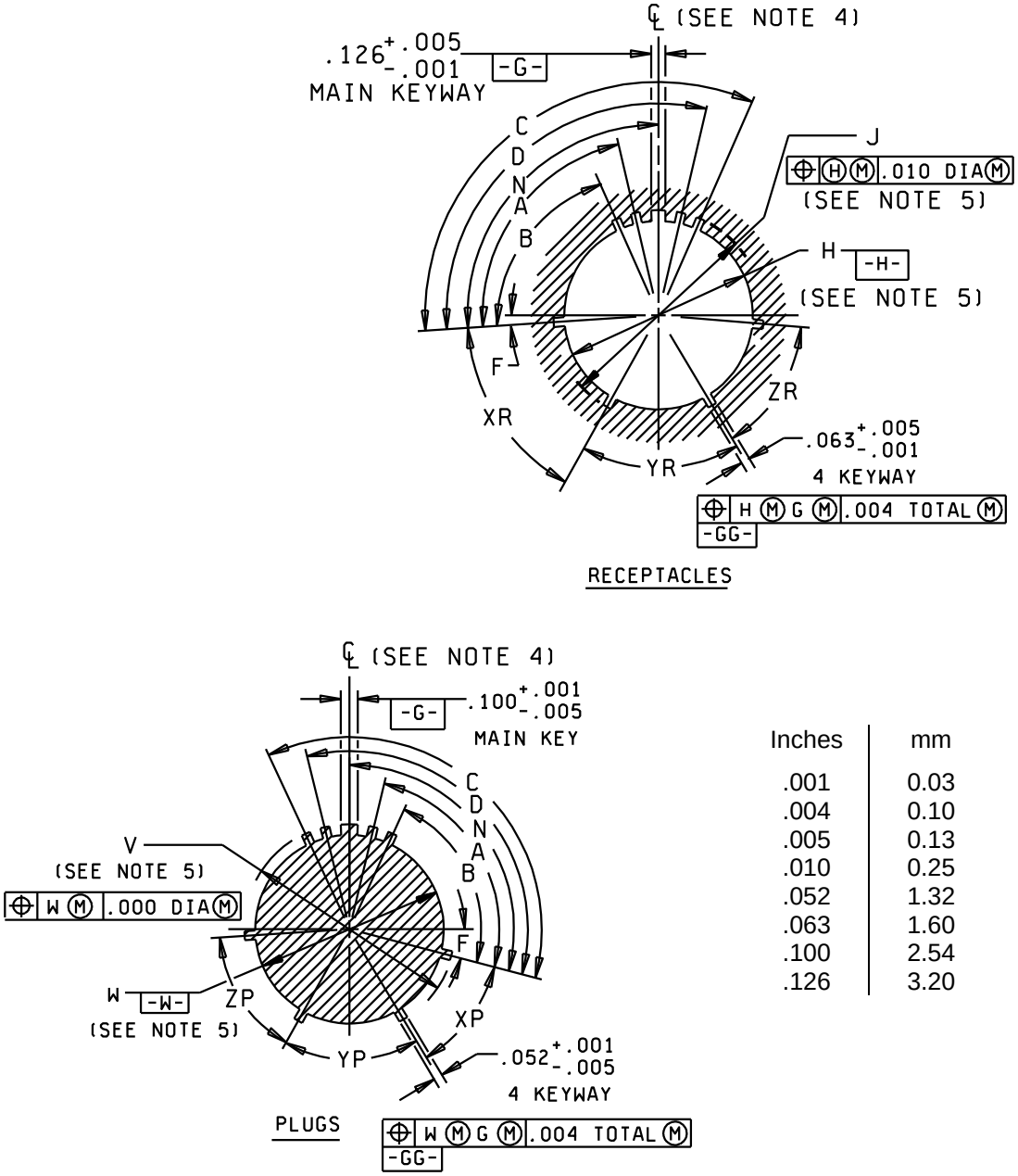

Inches	mm
.001	0.03
.004	0.10
.005	0.13
.010	0.25
.052	1.32
.063	1.60
.100	2.54
.126	3.20

MAIN KEY/KEYWAY POLARIZATION

FIGURE 5 Connector intermateability dimensions.
Main key / keyway polarization (series I and II).

Downloaded from http://www.everyspec.com

Series I assemblies, main key and keyway polarization									
Shell size	F	Normal rotation, letter designator "N"				Alternate rotations, letter designators "A", "B"."C" or "D"			
		Main key/ keyway	Minor keys/keyways rotations						
		N	XR XP	YR YP	ZR ZP	A	B	C	D
9	5°	95°	45°	88°	27°	77°	---	---	113°
11	5°	95°	45°	88°	27°	81°	67°	123°	109°
13	5°	95°	45°	88°	27°	75°	63°	127°	115°
15	5°	95°	45°	88°	27°	74°	61°	129°	116°
17	5°	95°	45°	88°	27°	77°	65°	125°	113°
19	5°	95°	45°	88°	27°	77°	65°	125°	113°
21	5°	95°	45°	88°	27°	77°	65°	125°	113°
23	5°	95°	45°	88°	27°	80°	69°	121°	110°
25	5°	95°	45°	88°	27°	80°	69°	121°	110°

Series II assemblies, main key and keyway polarization									
Shell size	F	Normal rotation, letter designator "N"				Alternate rotations, letter designators "A", "B"."C" or "D"			
		Main key/ keyway	Minor keys/keyways rotations						
		N	XR XP	YR YP	ZR ZP	A	B	C	D
8	10°	100°	28°	100°	37°	82°	---	---	118°
10	10°	100°	28°	100°	37°	86°	72°	128°	114°
12	10°	100°	28°	100°	37°	80°	68°	132°	120°
14	10°	100°	28°	100°	37°	79°	66°	134°	121°
16	10°	100°	28°	100°	37°	82°	70°	130°	118°
18	10°	100°	28°	100°	37°	82°	70°	130°	118°
20	10°	100°	28°	100°	37°	82°	70°	130°	118°
22	10°	100°	28°	100°	37°	85°	74°	126°	115°
24	10°	100°	28°	100°	37°	85°	74°	126°	115°

NOTES:
1. Dimensions are in inches. Metric equivalents are given for information only.
2. All angles are BSC.
3. $^{C}_{L}$ indicates center line of insert arrangement. The insert arrangement and the 4 minor keyways do not rotate with main key/keyway. The main key/keyway rotates to position A, B, C or D for alternates.
4. For specified dimensions, see applicable series detail of this figure.

FIGURE 5 Connector intermateability dimensions.
Main key / keyway polarization (series I and II) - Continued.

Downloaded from http://www.everyspec.com

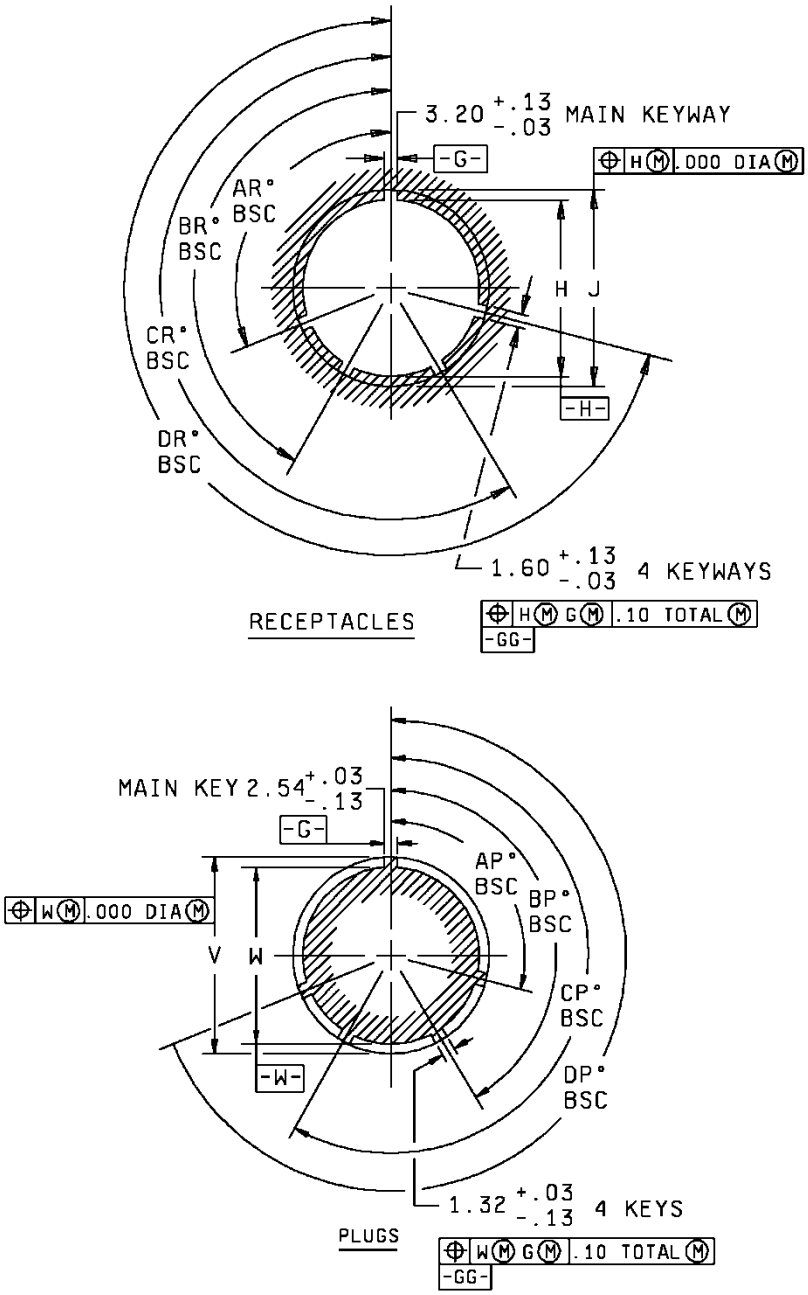

MAIN KEY/KEYWAY POLARIZATION

FIGURE 6. Connector intermateability dimensions. Main key / keyway polarization (series III).

Downloaded from http://www.everyspec.com

Shell size	Key and keyway arrangement identification letter	Minor key/keyway rotations			
		AR° or AP° BSC	BR° or BP° BSC	CR° or CP° BSC	DR° or DP° BSC
9	N	105	140	215	265
	A	102	132	248	320
	B	80	118	230	312
	C	35	140	205	275
	D	64	155	234	304
	E	91	131	197	240
11, 13, and 15	N	95	141	208	236
	A	113	156	182	292
	B	90	145	195	252
	C	53	156	220	255
	D	119	146	176	298
	E	51	141	184	242
17 and 19	N	80	142	196	293
	A	135	170	200	310
	B	49	169	200	244
	C	66	140	200	257
	D	62	145	180	280
	E	79	153	197	272
21, 23, and 25	N	80	142	196	293
	A	135	170	200	310
	B	49	169	200	244
	C	66	140	200	257
	D	62	145	180	280
	E	79	153	197	272

NOTES:
1. Dimensions are in millimeters.
2. Inch equivalents are given for information only.
3. All angles are BSC.
4. The insert arrangement does not rotate with main key/keyway.
5. For alternate rotations A through E, the main key stays fixed, and the minor keys rotate.

FIGURE 6 Connector intermateability dimensions.
Main key / keyway polarization (series III) - Continued.

Downloaded from http://www.everyspec.com

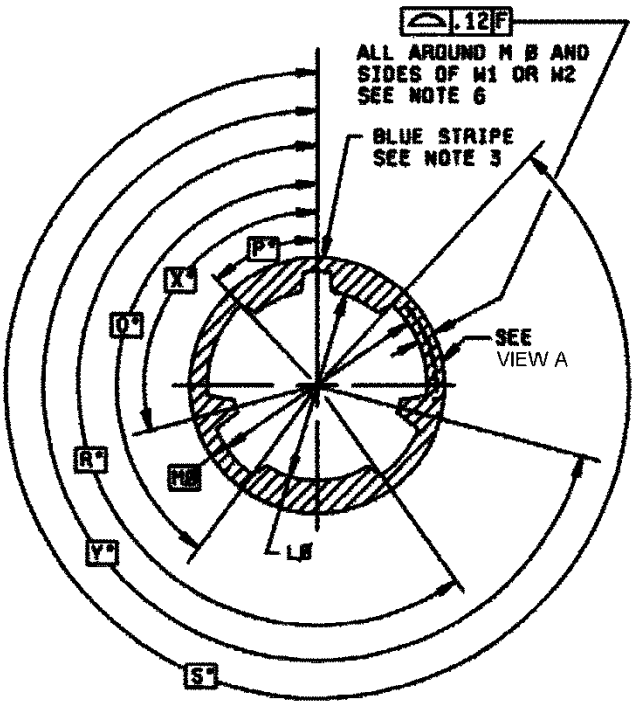

mm	Inches
0.050	.002
0.12	.005
0.127	.005
0.13	.005
0.34	.013
0.47	.019

PLUG, OUTER COUPLING RING
MAIN KEY/KEYWAY POLARIZATION

FIGURE 7. Connector intermateability dimensions (series IV), Main key / keyway polarization.

Downloaded from http://www.everyspec.com

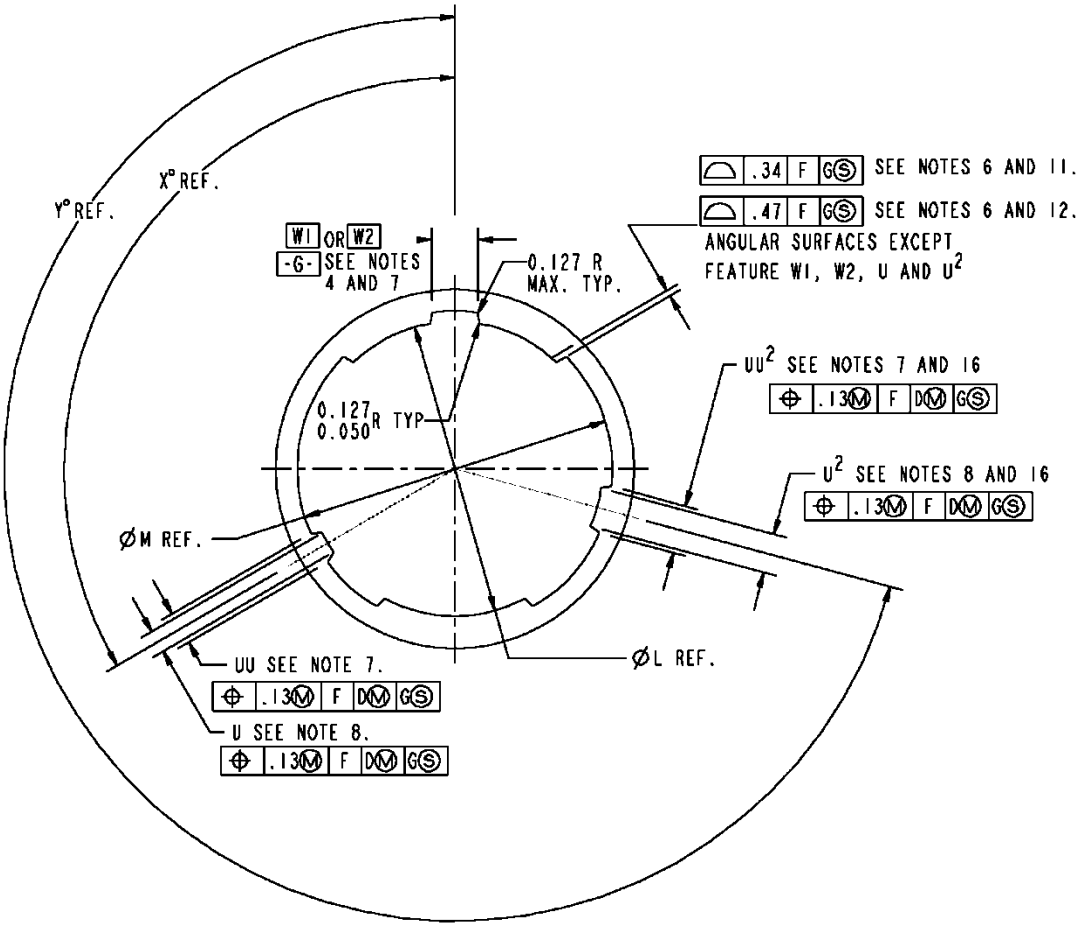

VIEW A
PLUG
MAIN KEY/KEYWAY POLARIZATION

FIGURE 7. Connector intermateability dimensions (series IV), Main key / keyway polarization - Continued.

Downloaded from http://www.everyspec.com

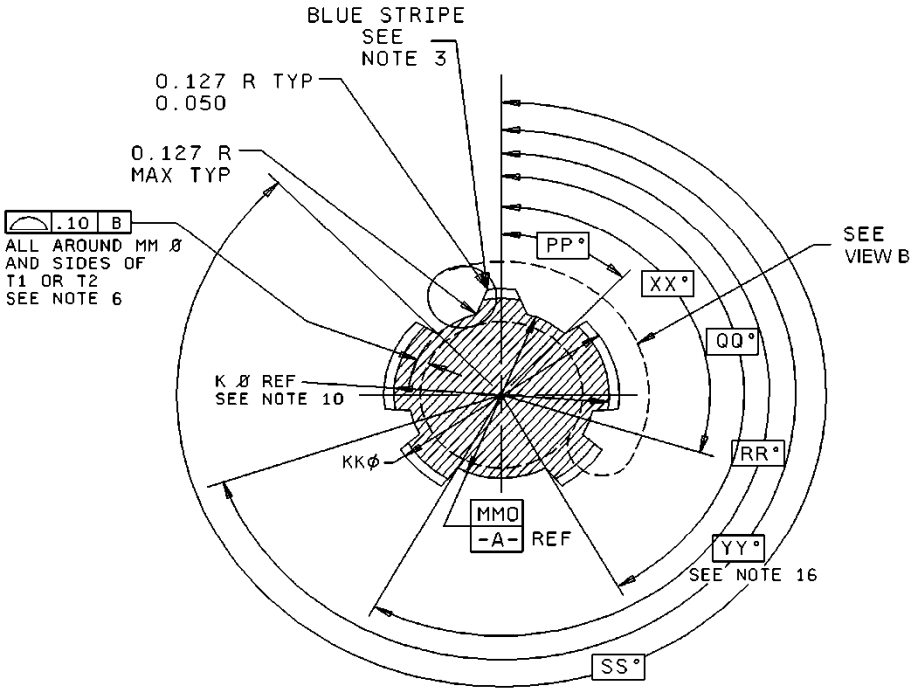

RECEPTACLE
MAIN KEY/KEYWAY POLARIZATION

mm	Inches
0.050	.002
0.10	.004
0.127	.005
0.13	.005
0.16	.006

FIGURE 7. Connector intermateability dimensions (series IV), Main key / keyway polarization - Continued.

Downloaded from http://www.everyspec.com

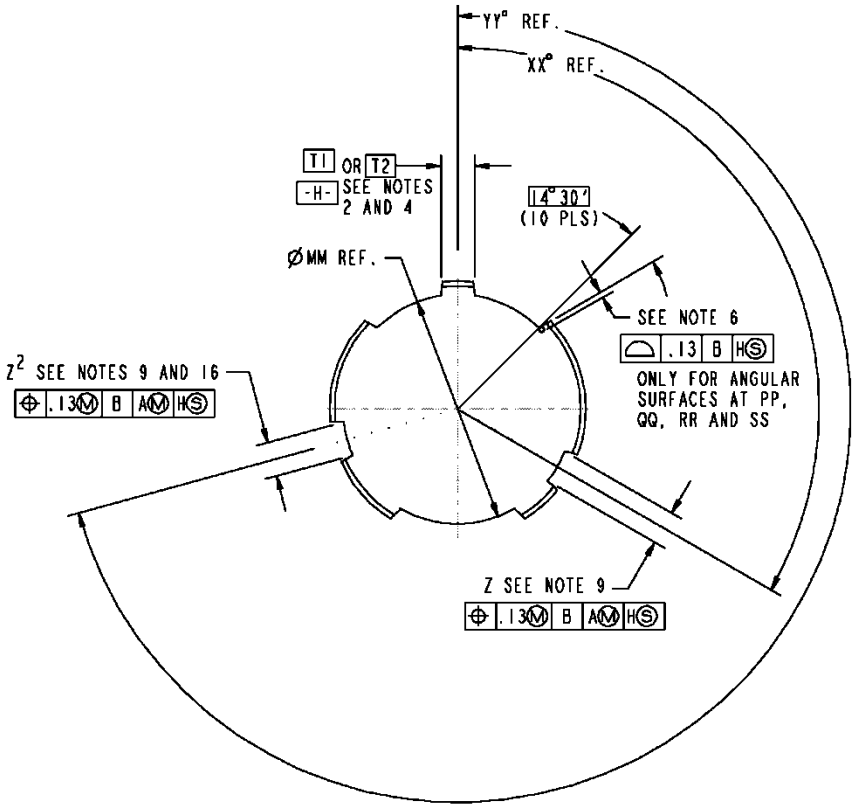

VIEW B
RECEPTACLE
MAIN KEY/KEYWAY POLARIZATION

FIGURE 7. Connector intermateability dimensions (series IV), Main key / keyway polarization - Continued.

Downloaded from http://www.everyspec.com

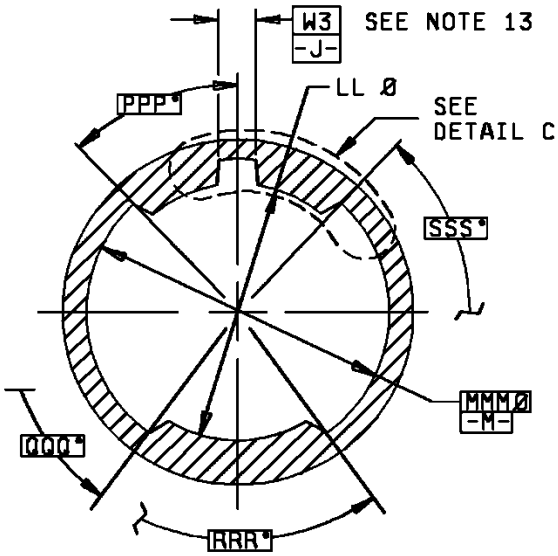

INNER PLUG SHELL

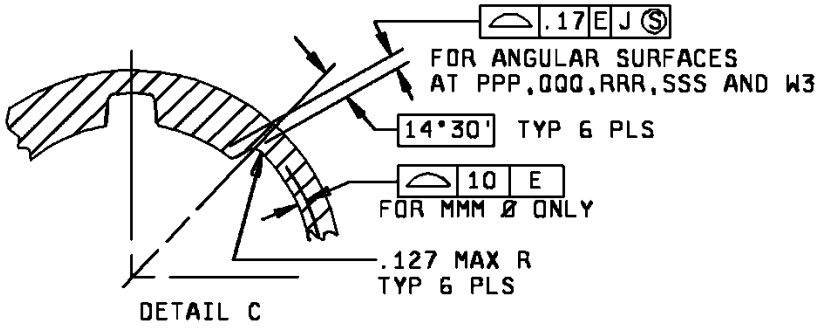

MAIN KEY/KEYWAY POLARIZATION

mm	Inches
0.10	.004
0.127	.005
0.17	.007
0.20	.008

FIGURE 7. Connector intermateability dimensions (series IV), Main key / keyway polarization - Continued.

Downloaded from http://www.everyspec.com

Shell size code (see note 15)	Plug, inner shell Main key and keyway polarization							Main keyway inner shell
	Shell size	LL dia	MMM dia BSC	PPP BSC	QQQ BSC	RRR BSC	SSS BSC	W3 BSC (see note 13)
B	11	13.33 (.525) 13.10 (.516)	15.01 (.591)	46°22'	149°13'	210°47'	313°38'	2.73 (.107)
C	13	16.79 (.661) 16.53 (.651)	18.34 (.722)	45°54'	149°3'	210°57'	314°6'	
D	15	19.96 (.786) 19.71 (.776)	21.49 (.846)	45°48'	149°10'	210°50'	314°12'	3.26 (.128)
E	17	23.17 (.912) 22.91 (.902)	24.66 (.971)	45°40'	149°19'	210°41'	314°20'	
F	19	26.06 (1.026) 25.81 (1.016)	27.69 (1.090)	45°34'	149°27'	210°33'	314°26'	3.76 (.148)
G	21	29.24 (1.151) 28.98 (1.141)	30.86 (1.215)	45°29'	149°29'	210°31'	314°31'	
H	23	32.41 (1.276) 32.16 (1.266)	34.14 (1.344)	45°27'	149°28'	210°32'	314°33'	4.28 (.169)
J	25	35.59 (1.401) 35.33 (1.391)	37.36 (1.471)	45°30'	149°34'	210°26'	314°30'	

FIGURE 7. Connector intermateability dimensions (series IV), Main key / keyway polarization - Continued.

Downloaded from http://www.everyspec.com

Receptacle Main key and keyway polarization										Main key (receptacle) (BSC) (see note 2)	
Shell size code (see note 15)	Shell size	MM dia (BSC)	PP°	QQ°	RR°	SS°	Z	Z² (all polariza-tions except K)	Z² (K polarization only, see note 16)	Socket contact T1	Pin contact T2 (see note 4)
B	11	13.09 (.515)	44°28'	151°6'	208°54'	315°32'	1.83 (.072) 1.52 (.060)	1.83 (.072) 1.52 (.060)	2.46 (.097) 2.16 (.085)	1.90 (.075)	2.78 (.109)
C	13	16.51 (.650)	44°25'	150°31'	209°29'	315°35'				1.94 (.076)	2.85 (.112)
D	15	19.69 (.775)	44°33'	150°24'	209°36'	315°27'	2.34 (.092) 2.03 (.080)	2.34 (.092) 2.03 (.080)	3.23 (.127) 2.92 (.115)	2.43 (.096)	3.36 (.132)
E	17	22.89 (.901)	44°36'	150°22'	209°38'	315°24'				2.45 (.096)	3.40 (.134)
F	19	25.79 (1.015)	44°33'	150°27'	209°33'	315°27'	2.85 (.112) 2.54 (.100)	2.85 (.112) 2.54 (.100)	3.99 (.157) 3.68 (.145)	2.96 (.117)	3.91 (.154)
G	21	28.96 (1.140)	44°34'	150°23'	209°37'	315°26'				2.99 (.118)	3.94 (.155)
H	23	32.14 (1.265)	44°34'	150°20'	209°40'	315°26'	3.35 (.132) 3.04 (.120)	3.35 (.132) 3.04 (.120)	4.75 (.187) 4.45 (.175)	3.50 (.138)	4.46 (.176)
J	25	35.31 (1.390)	44°42'	150°22'	209°38'	315°18'				3.53 (.139)	4.49 (.177)

FIGURE 7. Connector intermateability dimensions (series IV), Main key / keyway polarization - Continued.

Downloaded from http://www.everyspec.com

Key and keyway arrangement polarity dimensions									
	N	A	B	C	D	K (see note 16)	L	M	R
X° XX°	110°	100°	90°	80°	70°	120°	120°	120°	120°
Y° YY°	250°	260°	270°	280°	290°	255°	265°	275°	285°

Plug, outer coupling ring, main key and keyway polarization							
Shell size code (see note 15)	Shell size	L dia	M dia (BSC)	P°	Q°	R°	S°
B	11	13.26 (.522) 13.16 (.518)	16.28 (.641)	47°21'	148°13'	211°47'	312°39'
C	13	16.68 (.657) 16.58 (.653)	19.35 (.762)	46°34'	148°22'	211°38'	313°26'
D	15	19.86 (.782) 19.76 (.778)	22.50 (.886)	46°23'	148°35'	211°25'	313°37'
E	17	23.06 (.908) 22.96 (.904)	25.68 (1.011)	46°11'	148°47'	211°13'	313°49'
F	19	25.96(1.022) 25.86(1.018)	27.71 (1.091)	45°33'	149°27'	210°33'	314°27'
G	21	29.13(1.147) 29.03(1.143)	30.88 (1.216)	45°28'	149°29'	210°31'	314°32'
H	23	32.31 (1.272) 32.21 (1.268)	34.16 (1.345)	45°25'	149°29'	210°31'	314°35'
J	25	35.48 (1.397) 35.38 (1.393)	37.38 (1.472)	45°30'	149°34'	210°26'	314°30'

FIGURE 7. Connector intermateability dimensions (series IV), Main key / keyway polarization - Continued.

Downloaded from http://www.everyspec.com

Plug, outer coupling ring, main key and keyway polarization							
Shell size code (see note 15)	Shell size	U	U² (all polarizations except K)	U² (K polarization only)	UU max	UU² max (all polarizations except K)	UU² max (K polarization only)
B	11	1.26 (.050)	1.26 (.050)	2.06 (.081)	2.42 (.095)	2.42 (.095)	3.20 (.126)
C	13	0.95 (.037)	0.95 (.037)	1.96 (.077)	2.22 (.087)	2.22 (.087)	3.00 (.118)
D	15	1.77 (.070)	1.77 (.070)	2.82 (.111)	2.76 (.109)	2.76 (.109)	3.81 (.150)
E	17	1.46 (.057)	1.46 (.057)	2.72 (.107)	2.71 (.107)	2.71 (.107)	3.58 (.141)
F	19	2.28 (.090)	2.28 (.090)	3.58 (.141)	2.94 (.116)	2.94 (.116)	4.24 (.167)
G	21	1.97 (.078)	1.97 (.078)	3.48 (.137)	2.92 (.115)	2.92 (.115)	4.22 (.166)
H	23	2.78 (.109)	2.78 (.109)	4.34 (.171)	3.47 (.137)	3.47 (.137)	5.05 (.199)
J	25	2.47 (.097)	2.47 (.097)	4.24 (.167)	3.47 (.137)	3.47 (.137)	5.05 (.199)

Plug, outer coupling ring, main key and keyway polarization			
Shell size code (see note 15)	Shell size	W1 BSC pin contact (see note 7)	W2 BSC socket contact (see notes 4 and 7)
B	11	1.82 (.072)	2.84 (.112)
C	13	1.85 (.073)	2.87 (.113)
D	15	2.36 (.093)	3.37 (.133)
E	17		
F	19	2.87 (.113)	3.89 (.153)
G	21		
H	23	3.37 (.133)	4.39 (.173)
J	25		

FIGURE 7. Connector intermateability dimensions (series IV), Main key / keyway polarization - Continued.

Downloaded from http://www.everyspec.com

NOTES:

1. Dimensions are in millimeters. Inch equivalents are given for information only.
2. Dimensions "T1" and "T2" (main key) apply at MM diameter.
3. Color code main key or keyway.
4. Main key/keyway dimensions "T2" (receptacles with pins) and "W2" (plugs with sockets) are for use with polarities N through K.
5. Key and keyway arrangements defined in table apply to all shell sizes.
6. See figure 4 for datum's B, C, D, and F.
7. Dimensions "W1", "W2" (main keyway) and "UU" and UU² apply at "M" diameter.
8. Dimension "U" and "U²" (polarity keys) applies at "L" diameter.
9. Dimension "Z" and "Z²" (polarity keys) applies at "MM" diameter.
10. See figure 4 for dimensions K diameter and KK diameter.
11. Applies to shell sizes 19 through 25 only.
12. Applies to shell sizes 11 through 17 only.
13. Dimensions "W3" applies at MMM diameter.
14. In the ready to mate position datum -G- and -J- are colinear.
15. For shell size code used for part numbering, see table I.
16. For K polarization, see U², UU², and Z² for key/keyway dimensions width increase on "Y°" and "YY°" positions.

FIGURE 7. Connector intermateability dimensions (series IV), Main key / keyway polarization - Continued.

Downloaded from http://www.everyspec.com

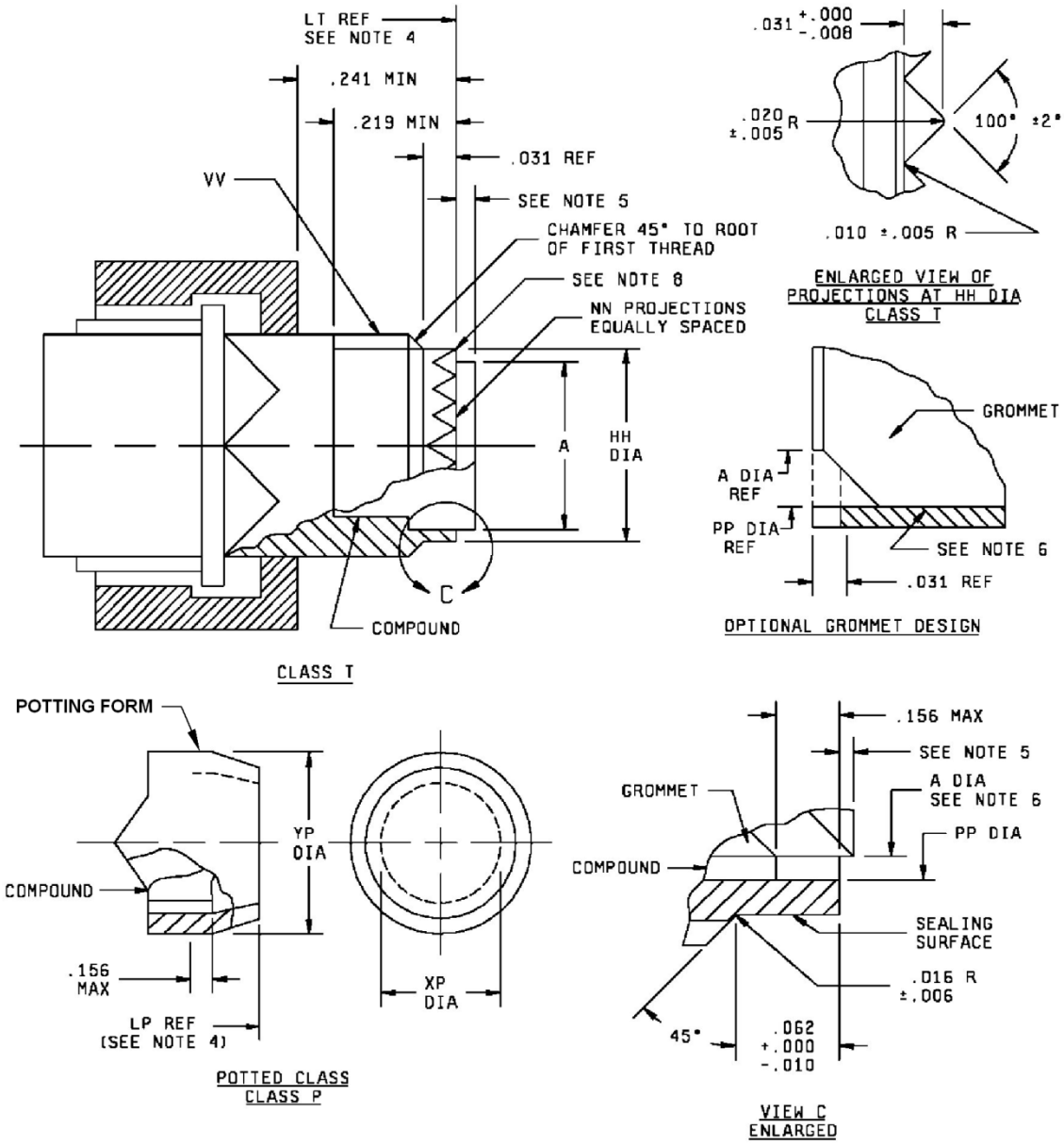

FIGURE 8. Connector accessory interface dimensions (series I).

Downloaded from http://www.everyspec.com

Shell size	A dia (grommet) max	HH dia +.001 -.005	NN	PP dia ±.003	XP min dia	YP max dia	V V thread class 2A UNEF(plated) (see note 3)
9	0.299	0.386	12	0.344	0.434	0.641	.4375-28
11	0.427	0.503	16	0.472	0.548	0.766	.5625-24
13	0.541	0.628	20	0.586	0.673	0.891	.6875-24
15	0.666	0.742	24	0.711	0.798	1.016	.8125-20
17	0.791	0.866	28	0.836	0.899	1.125	.9375-20
19	0.897	0.984	32	0.942	1.024	1.250	1.0625-18
21	1.022	1.109	36	1.067	1.149	1.375	1.1875-18
23	1.147	1.234	40	1.192	1.274	1.500	1.3125-18
25	1.272	1.359	44	1.317	1.399	1.625	1.4375-18

Inches	mm	Inches	mm	Inches	mm	Inches	mm	Inches	mm
.001	0.03	.299	7.59	.666	16.92	.899	22.83	1.192	30.28
.005	0.13	.344	8.73	.673	17.09	.942	23.93	1.234	31.34
.006	0.15	.386	9.80	.711	18.06	.984	24.99	1.250	31.75
.008	0.20	.427	10.85	.742	18.85	1.016	25.81	1.272	32.31
.010	0.25	.434	11.02	.766	19.46	1.022	25.96	1.274	32.36
.016	0.41	.472	11.99	.791	20.09	1.024	26.01	1.317	33.45
.020	0.51	.503	12.78	.798	20.27	1.067	27.10	1.359	34.52
.031	0.79	.541	13.74	.836	21.23	1.109	28.17	1.375	34.92
.062	1.57	.548	13.92	.866	22.00	1.125	28.58	1.399	35.53
.156	3.96	.586	14.88	.891	22.63	1.147	29.13	1.500	38.10
.219	5.56	.628	15.95	.897	22.78	1.149	29.18	1.625	41.28
.241	6.12	.641	16.28						

NOTES:
1. Dimensions are in inches.
2. Metric equivalents are given for information only.
3. Threads may have modified major diameter.
4. For dimensions of LP and LT, see MS sheet form standards.
5. Grommet extension shall not exceed .060. For connectors containing size 10 contacts the grommet extension shall not exceed .234 inch.
6. Grommet may taper to inner diameter.
7. The centerline of specified projection must be located on vertical centerline within 2° of -GG- (see main key/keyway polarization detail on figure 5).
8. Class P view shown with potting form installed. Class P, potted connectors kitted with ring and potting form. Class P connectors include “VV” accessory threads but do not require “NN” projections.
9. Box mount connectors do not include accessory threads.

FIGURE 8. Connector accessory interface dimensions (series I) - Continued.

Downloaded from http://www.everyspec.com

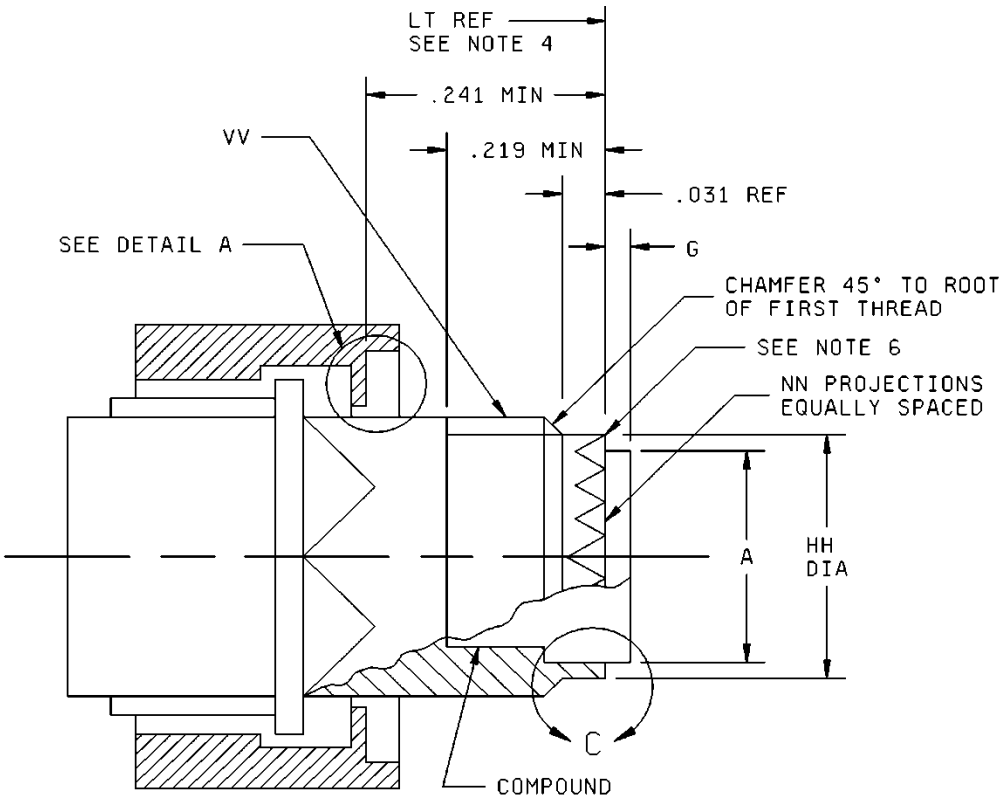

CLASS T

FIGURE 9. Connector accessory interface dimensions (series II).

Downloaded from http://www.everyspec.com

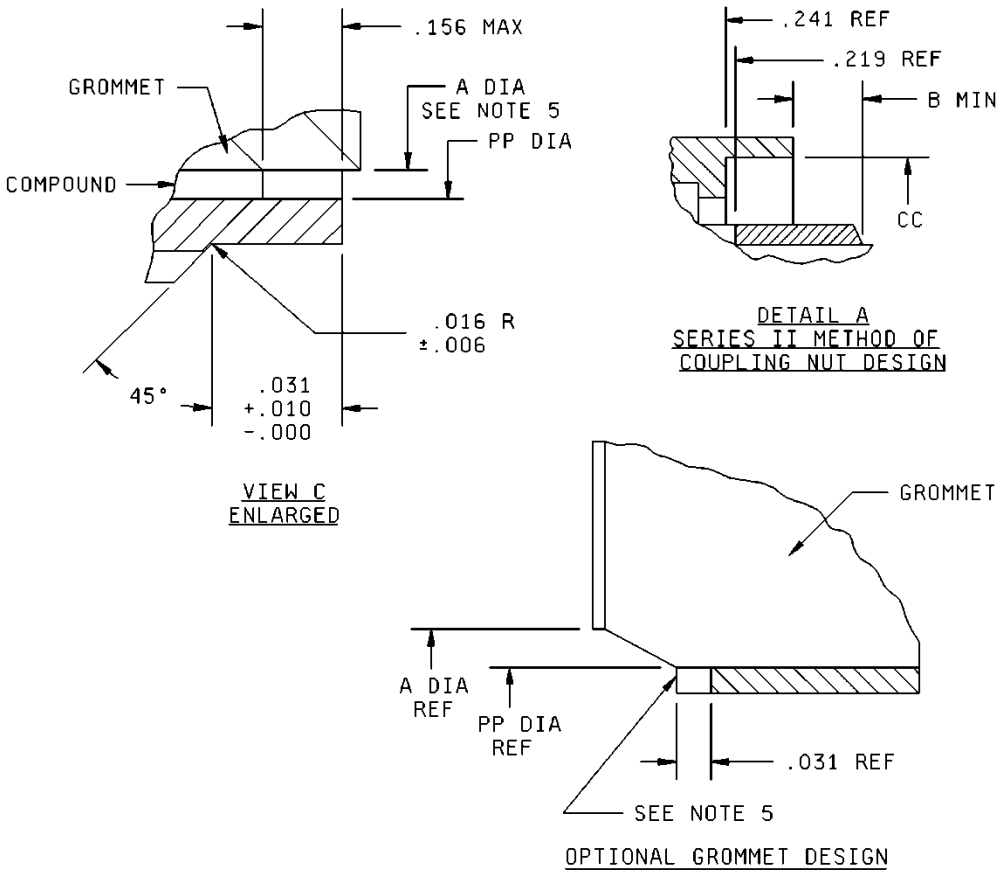

FIGURE 9. Connector accessory interface dimensions (series II) - Continued.

Downloaded from http://www.everyspec.com

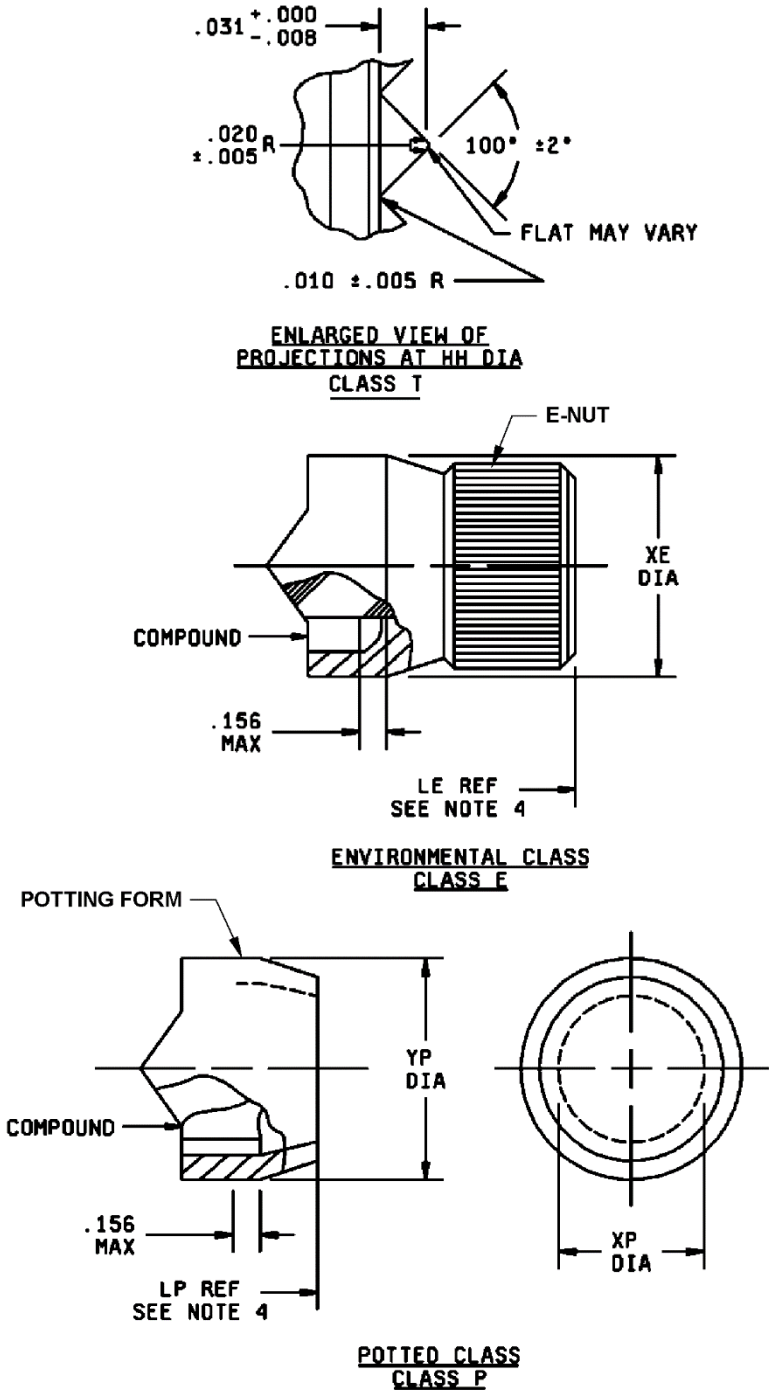

FIGURE 9. Connector accessory interface dimensions (series II) - Continued.

Downloaded from http://www.everyspec.com

Shell size	G grommet projection class T only	HH dia +.001 -.005	NN	PP dia ±.003	XE max dia	XP min dia
8	.120 ±.030	.387	12	.344	.594	.434
10		.515	16	.472	.719	.548
12		.628	20	.586	.844	.673
14		.754	24	.711	.969	.798
16		.879	28	.836	1.094	.899
18		.985	32	.942	1.219	1.024
20		1.110	36	1.067	1.344	1.149
22		1.235	40	1.192	1.469	1.274
24	.090 ±.050	1.360	44	1.317	1.594	1.399

Shell size	YP max dia	VV thread class 2A UNEF plated (see note 3)	A dia grommet max	CC min dia	B min
8	.641	.4375-28	.299	.578	.135
10	.766	.5625-24	.427	.719	
12	.891	.6875-24	.541	.844	
14	1.016	.8125-20	.666	.969	
16	1.125	.9375-20	.791	1.094	
18	1.250	1.0625-18	.897	1.219	.109
20	1.375	1.1875-18	1.022	1.344	
22	1.500	1.3125-18	1.147	1.469	
24	1.625	1.4375-18	1.272	1.594	

FIGURE 9. Connector accessory interface dimensions (series II) - Continued.

Downloaded from http://www.everyspec.com

Inches	mm	Inches	mm	Inches	mm	Inches	mm	Inches	mm
.001	0.03	.219	5.56	.641	16.28	.899	22.83	1.219	30.96
.005	0.13	.241	6.12	.666	16.92	.942	23.93	1.235	31.37
.006	0.15	.299	7.59	.673	17.09	.969	24.61	1.250	31.75
.008	0.20	.344	8.74	.711	18.06	.985	25.02	1.272	32.31
.010	0.25	.387	9.83	.719	18.26	1.016	25.81	1.274	32.36
.016	0.41	.427	10.85	.754	19.15	1.022	25.96	1.317	33.45
.020	0.51	.434	11.02	.766	19.46	1.024	26.01	1.344	34.14
.030	0.76	.472	11.99	.791	20.09	1.067	27.10	1.360	34.54
.031	0.79	.515	13.08	.798	20.27	1.094	27.79	1.375	34.92
.050	1.27	.541	13.74	.836	21.23	1.110	28.19	1.399	35.53
.090	2.29	.548	13.92	.844	21.44	1.125	28.58	1.469	37.31
.109	2.77	.578	14.68	.879	22.33	1.147	29.13	1.500	38.10
.120	3.05	.586	14.88	.891	22.63	1.149	29.18	1.594	40.49
.135	3.43	.594	15.09	.897	22.78	1.192	30.28	1.625	41.28
.156	3.96	.628	15.95						

NOTES:

1. Dimensions are in inches.
2. Metric equivalents are given for information only.
3. Thread may have modified major diameters.
4. For dimensions LE, LP and LT, see applicable MS sheet form standard.
5. Grommet may taper to shell inner diameter.
6. The centerline of specified projection must be located on vertical centerline within 2° of -GG- (see main key-keyway polarization detail on figure 5).
7. Class E kitted with E-nut. Class E view shown with E-nut installed. Class P, potted connectors kitted with ring and potting form. P view shown with potting form installed. Class E and class P connectors include “VV” accessory threads. Class E connectors include “NN” projections. Class P connectors do not require “NN” projections.
8. Box mount connectors do not include accessory threads.

FIGURE 9. Connector accessory interface dimensions (series II) - Continued.

Downloaded from http://www.everyspec.com

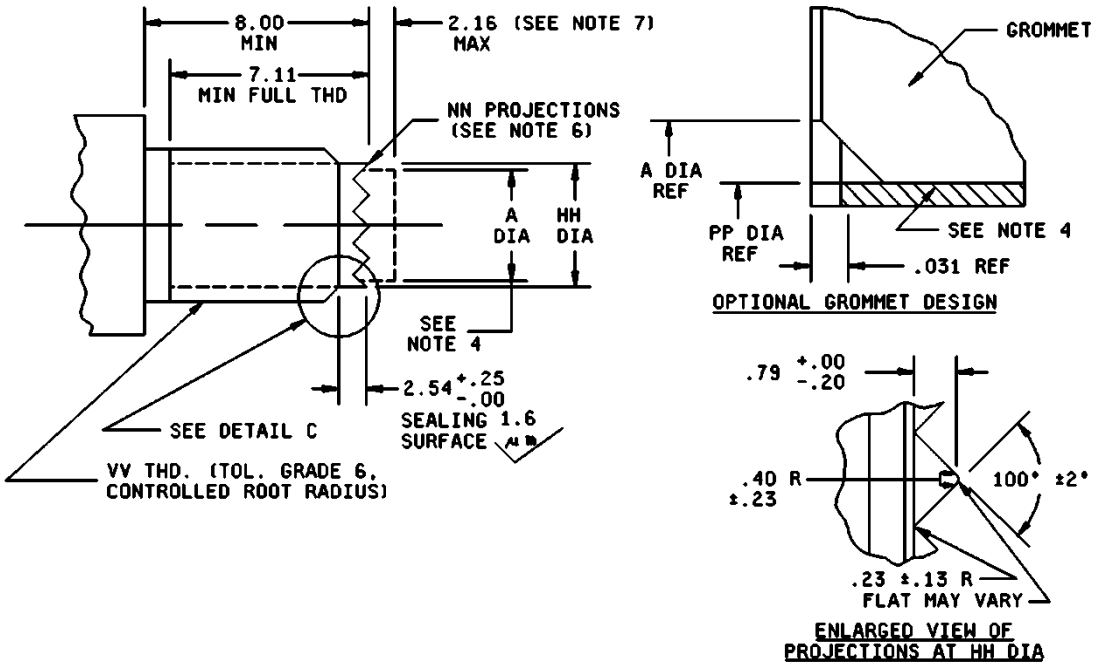

FIGURE 10. Connector accessory interface dimensions (series III and IV).

Downloaded from http://www.everyspec.com

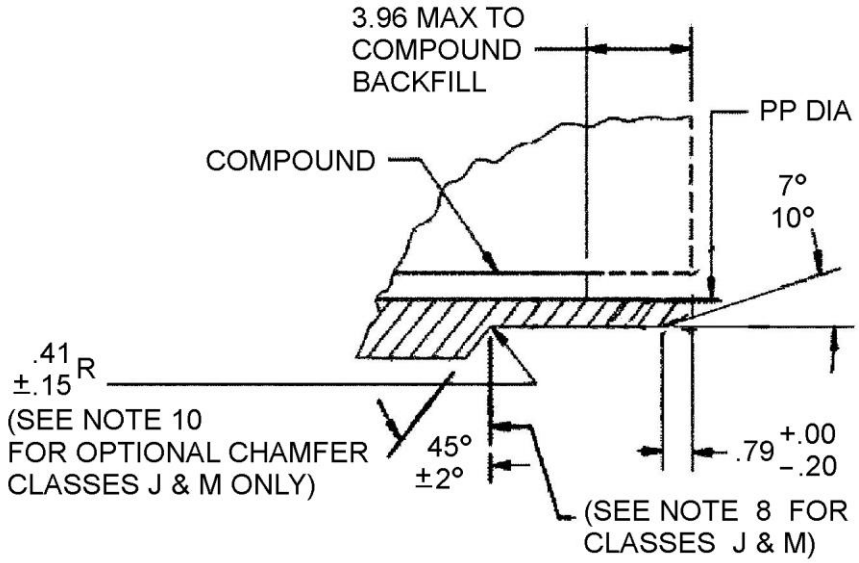

DETAIL C ENLARGED

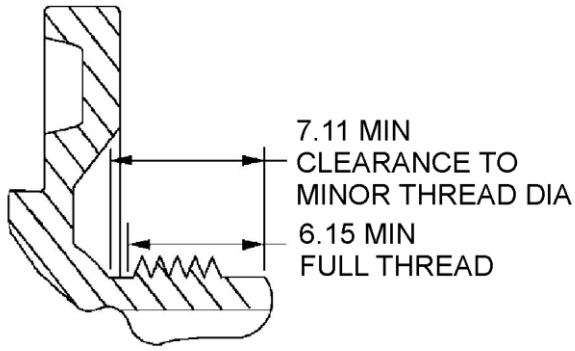

OPTION FOR JAM-NUT RECEPTACLES
CLASSES J AND M

FIGURE 10. Connector accessory interface dimensions (series III and IV) - Continued.

Downloaded from http://www.everyspec.com

Shell size code (see note 5)	Shell size	A max	HH +.00 -.15	NN	PP max	VV thread
A	9	7.59 (.299)	10.57 (.416)	12	8.80 (.346)	M12x1.0-6g 0.100R
B	11	10.85 (.427)	13.56 (.534)	16	12.07 (.475)	M15x1.0-6g 0.100R
C	13	13.74 (.541)	16.58 (.653)	20	14.96 (.589)	M18x1.0-6g 0.100R
D	15	16.92 (.666)	20.57 (.810)	24	18.14 (.714)	M22x1.0-6g 0.100R
E	17	20.09 (.791)	23.57 (.928)	28	21.31 (.839)	M25x1.0-6g 0.100R
F	19	22.78 (.897)	26.57 (1.046)	32	24.00 (.945)	M28x1.0-6g 0.100R
G	21	25.96 (1.022)	29.57 (1.164)	36	27.18 (1.070)	M31x1.0-6g 0.100R
H	23	29.13 (1.147)	32.56 (1.282)	40	30.35 (1.194)	M34x1.0-6g 0.100R
J	25	32.31 (1.272)	35.56 (1.400)	44	33.53 (1.320)	M37x1.0-6g 0.100R

NOTES:

1. Dimensions are in millimeters (mm).
2. Inch equivalents are in given in parentheses.
3. Threads are to be inspected with a 6h go-gauge and a 6g no-go-gauge.
4. Grommet may taper to shell inner diameter.
5. For shell size code used for part numbering, see table I.
6. The centerline of specified projection must be located on vertical centerline within 2° of -G- (see key/keyway polarization detail of figure 6 for series III and figure 7 for series IV).
7. For size 8 and 10 contact arrangements, 5.95 maximum.
8. Angle shall be 30° ± 2° for classes J and M.
9. The 7.112 mm (.280 inch) minimum shall be to the root of the thread (in accordance with FED-STD-H28/2, as specified in the requirements for standard diameter, incomplete formed threads, full shank fastener). Minimum runout / clearance as follows: Standard runout - 7.11 mm (.280 inch) minimum full thread (MFT) with .5P min runout. Blunt stop - 7.11 mm min (.280 inches MFT) with .18P additional clearance.
10. For classes J and M only, optional 45° chamfer and blunt start permissible at transition area between HH diameter and start of first thread.

FIGURE 10. Connector accessory interface dimensions (series III and IV) - Continued.

Downloaded from http://www.everyspec.com

Metric external thread dimensions (VV) for series III and IV						
Designation (thread size)	Major diameter		Pitch diameter		Minor diameter	
	max	min	max	min	max	min
M12x1.0-6g 0.100R	11.974	11.794	11.324	11.206	10.747	10.557
M15x1.0-6g 0.100R	14.974	14.794	14.324	14.206	13.747	13.557
M17x1.0-6g 0.100R	16.974	16.794	16.324	16.206	15.747	15.557
M18x1.0-6g 0.100R	17.974	17.794	17.324	17.206	16.747	16.557
M20x1.0-6g 0.100R	19.974	19.794	19.324	19.206	18.747	18.557
M22x1.0-6g 0.100R	21.974	21.794	21.324	21.206	20.747	20.557
M25x1.0-6g 0.100R	24.974	24.794	24.324	24.199	23.747	23.550
M28x1.0-6g 0.100R	27.974	27.794	27.324	27.199	26.747	26.550
M31x1.0-6g 0.100R	30.974	30.794	30.324	30.199	29.747	29.550
M32x1.0-6g 0.100R	31.974	31.794	31.324	31.199	30.747	30.550
M34x1.0-6g 0.100R	33.974	33.794	33.324	33.199	32.747	32.550
M35x1.0-6g 0.100R	34.974	34.794	34.324	34.199	33.747	33.550
M37x1.0-6g 0.100R	36.974	36.794	36.324	36.199	35.747	35.550
M38x1.0-6g 0.100R	37.974	37.794	37.324	37.199	36.747	36.550
M41x1.0-6g 0.100R	40.974	40.794	40.324	40.199	39.747	39.550
M44x1.0-6g 0.100R	43.974	43.794	43.324	43.199	42.747	42.550
M47x1.0-6g 0.100R	46.974	46.794	46.324	46.199	45.747	45.550

FIGURE 10. Connector accessory interface dimensions (series III and IV) - Continued.

Downloaded from http://www.everyspec.com

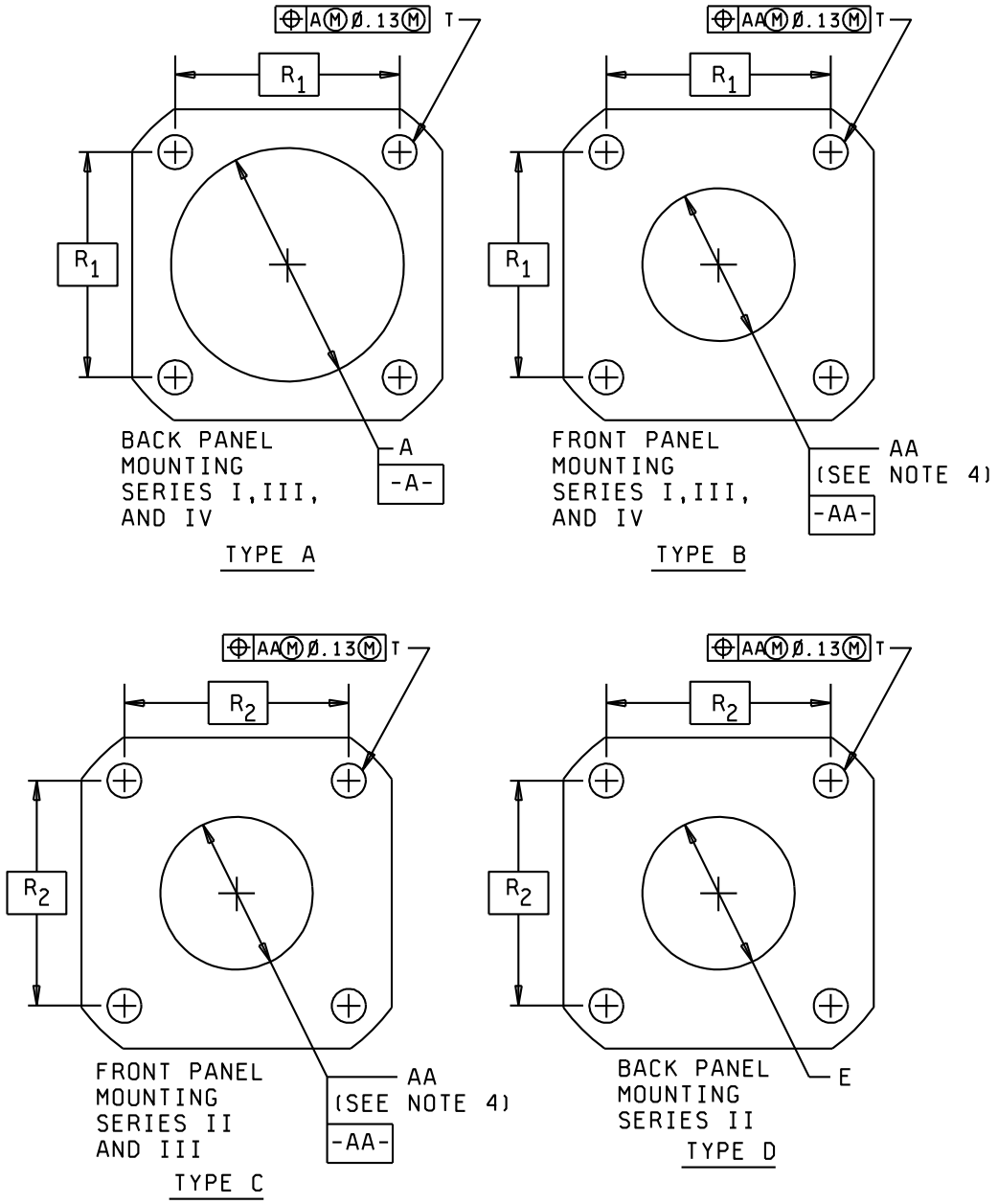

FIGURE 11. Recommended panel dimensions.

Downloaded from http://www.everyspec.com

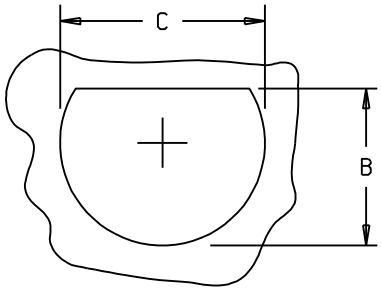

JAM NUT MOUNTING SERIES I AND III CRIMP AND HERMETIC, AND SERIES IV HERMETIC

TYPE E

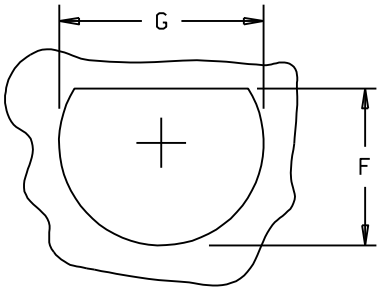

JAM NUT MOUNTING SERIES II CRIMP AND HERMETIC, AND SERIES IV CRIMP

TYPE F

Shell size	A dia min	AA dia min	B +.00 -.25 (see note 5 for size 8-9)	C +.25 -.00	E dia min	F +.00 -.25	G +.25 -.00	R1	R2	T dia ±.13
8-9	16.66 (.656)	13.11 (.516)	16.70 (.657)	17.6 (.693)	14.15 (.557)	21.08 (.830)	22.48 (.885)	18.26 (.719)	15.09 (.594)	3.25 (.128)
10-11	20.22 (.796)	15.88 (.625)	19.59 (.771)	20.96 (.825)	17.32 (.682)	24.26 (.955)	25.65 (1.010)	20.62 (.812)	18.26 (.719)	3.25 (.128)
12-13	23.42 (.922)	19.05 (.750)	24.26 (.955)	25.65 (1.010)	21.69 (.854)	27.56 (1.085)	28.83 (1.135)	23.01 (.906)	20.62 (.812)	3.25 (.128)
14-15	26.59 (1.047)	23.01 (.906)	27.56 (1.085)	28.83 (1.135)	24.87 (.979)	30.73 (1.210)	32.01 (1.260)	24.61 (.969)	23.01 (.906)	3.25 (.128)
16-17	30.96 (1.219)	25.81 (1.016)	30.73 (1.210)	32.01 (1.260)	28.04 (1.104)	33.91 (1.335)	35.18 (1.385)	26.97 (1.062)	24.61 (.969)	3.25 (.128)
18-19	32.94 (1.297)	28.98 (1.141)	33.91 (1.335)	35.18 (1.385)	31.22 (1.229)	37.08 (1.460)	38.35 (1.510)	29.36 (1.156)	26.97 (1.062)	3.25 (.128)
20-21	36.12 (1.422)	32.16 (1.266)	37.08 (1.460)	38.35 (1.510)	34.39 (1.354)	40.26 (1.585)	41.53 (1.635)	31.75 (1.250)	29.36 (1.156)	3.25 (.128)
22-23	39.29 (1.547)	34.93 (1.375)	40.26 (1.585)	41.53 (1.635)	37.57 (1.479)	43.42 (1.709)	44.70 (1.760)	34.93 (1.375)	31.75 (1.250)	3.91 (.154)
24-25	42.47 (1.672)	37.69 (1.484)	43.43 (1.710)	44.70 (1.760)	40.74 (1.604)	46.61 (1.835)	47.88 (1.885)	38.10 (1.500)	34.93 (1.375)	3.81 (.150)

FIGURE 11. Recommended panel dimensions - Continued.

Downloaded from http://www.everyspec.com

Recommended jam nut torque values			
UN thread sizes -2B	Torque min/max (inch-lbs)	Connector shell size reference	
		Series I	Series II
.6875-24 UNEF	28/34	9	--
.8125-20 UNEF	34/40	11	--
.875-20 UNEF	40/46	--	8
1.000-20 UNEF	50/55	13	10
1.125-18 UN	70/75	15	12
1.250-18 UN	80/85	17	14
1.375-18 UNEF	80/85	19	16
1.500-18 UN	105/115	21	18
1.625-18 UNEF	105/115	23	20
1.750-18 UNS	110/120	25	22
1.875-16 UN	120/130	--	24
--	--	--	--

Recommended jam nut torque values			
Metric thread sizes X1-6H	Torque min/max	Connector shell size reference	
		Series III	Series IV
M17	30/36	9	--
M20	40/46	11	--
M25	55/60	13	11
M28	70/75	15	13
M31	70/75	--	15
M32	80/85	17	--
M34	80/85	--	17
M35	90/95	19	--
M38	100/110	21	19
M41	110/120	23	21
M44	120/130	25	23
M47	120/130	--	25

NOTES:

1. Dimensions are in millimeters.
2. Inch equivalents are in parentheses.
3. Inch equivalents are given for information only.
4. "AA" minimum is the recommended clearance for connectors less accessories and having skirt diameters no larger than the metric thread illustrated on figure 10 (series III and IV connector accessory interface dimensions).
5. For dimension B, shell size 8-9 only, tolerance is + 0.10 / -0.06 mm.

FIGURE 11. Recommended panel dimensions - Continued.

Downloaded from http://www.everyspec.com

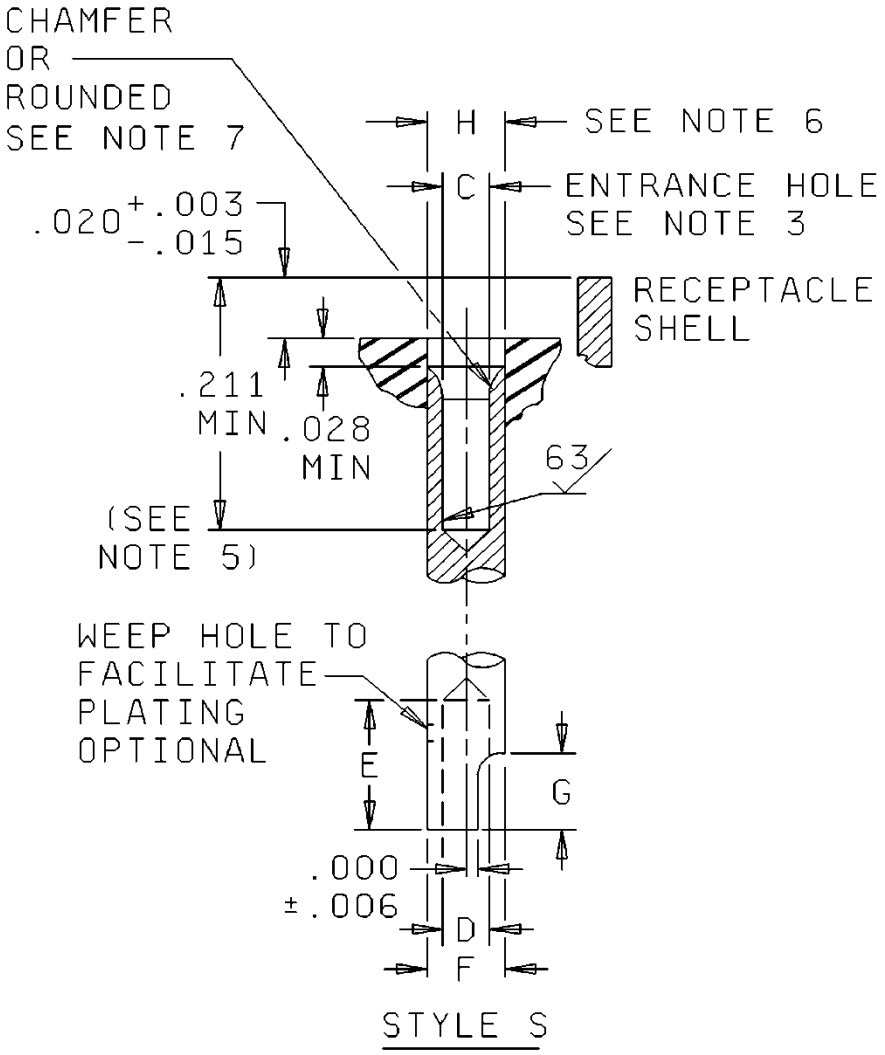

FIGURE 12. Hermetic contact configuration and dimensions.

Downloaded from http://www.everyspec.com

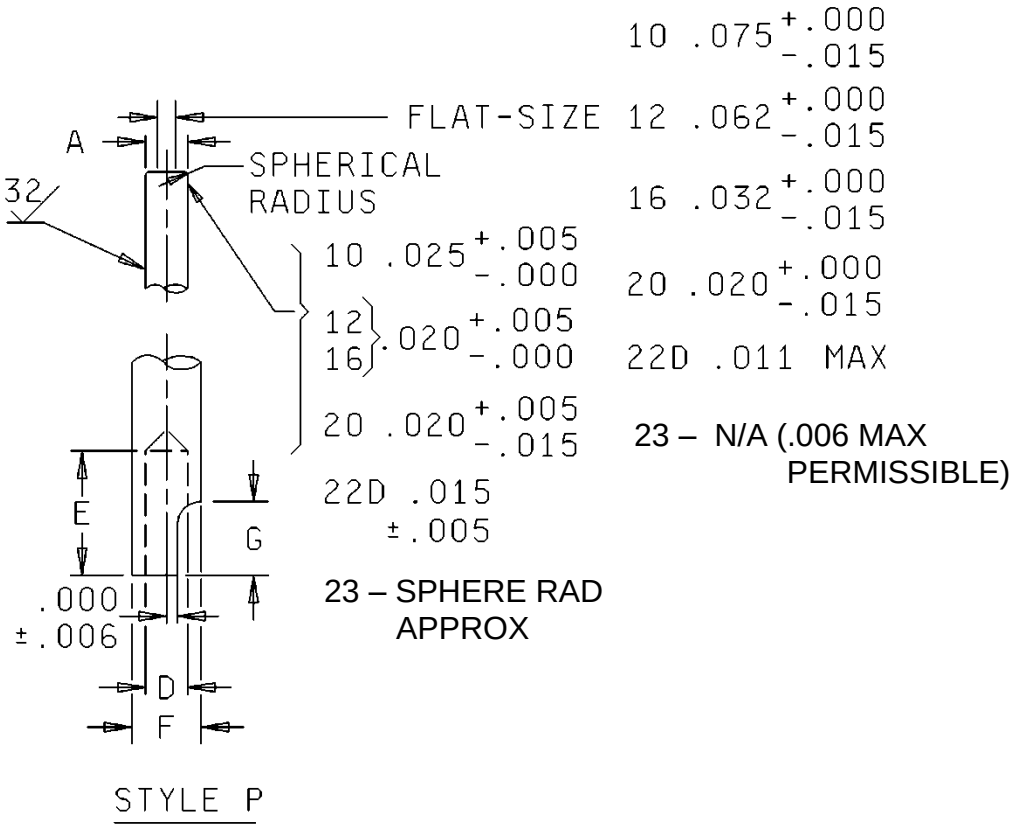

FIGURE 12. Hermetic contact configuration and dimensions - Continued.

Downloaded from http://www.everyspec.com

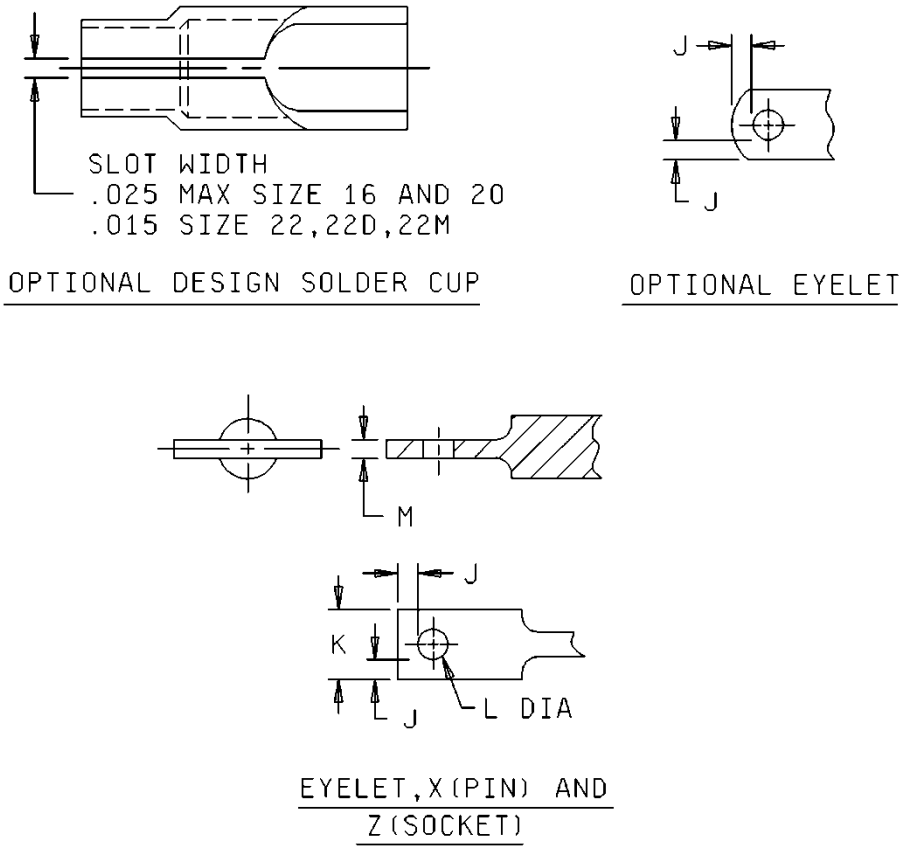

FIGURE 12. Hermetic contact configuration and dimensions - Continued.

Downloaded from http://www.everyspec.com

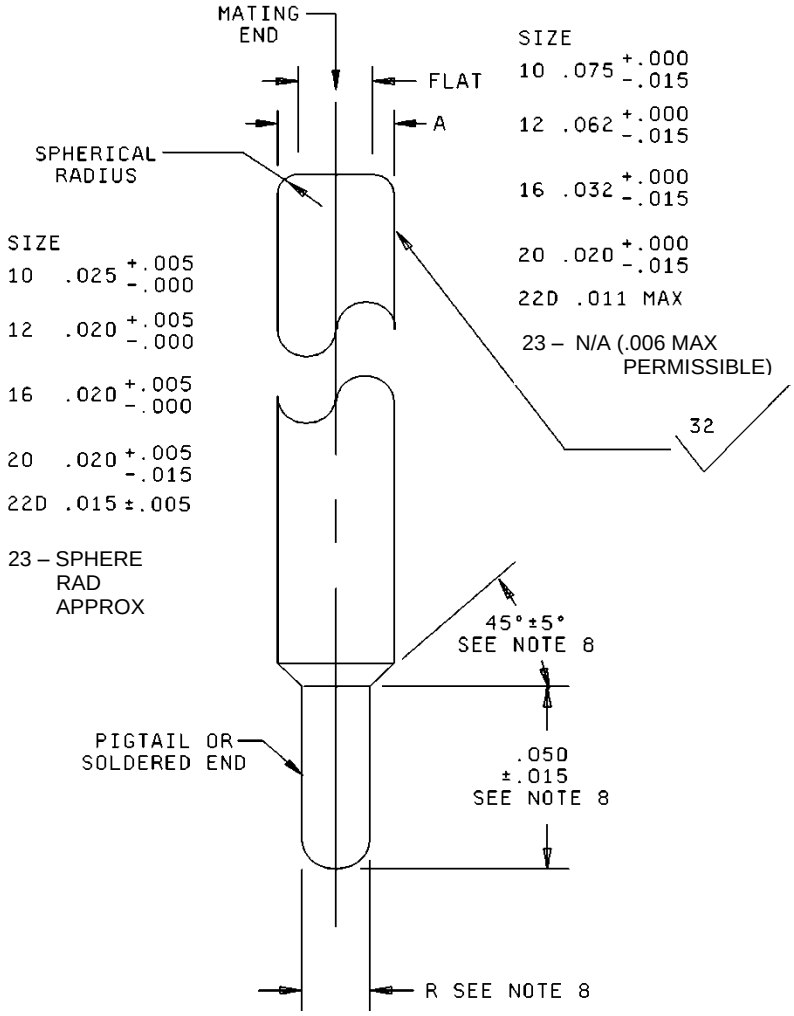

FIGURE 12. Hermetic contact configuration and dimensions - Continued.

Downloaded from http://www.everyspec.com

Contact size	A dia	C dia min	D dia	E min	F dia	G
23	.0260 .0275	.033	.040 .035	.125 .094	.055 .051	.080 .050
22 22D 22M (see note 8)	.0305 .0295	.036	.040 .035	.125 .094	.055 .051	.080 .050
20	.041 .039	.045	.048 .042	.156 .125	.088 .061	.114 .068
16	.0635 .0615	.067	.082 .069	.172 .141	.103 .097	.114 .068
12	.095 .093	.099	.120 .112	.172 .141	.142 .136	.114 .068
10	.126 .124	.130	.146 .138	.188 .157	.173 .167	.145 .097

Contact size	H dia +.005 -.000	R ±.002	J min	K max	L min	M min
23	.050	.013	.010	.062	.031	.012
22 22D 22M (see note 8)	.062	.013	.010	.062	.031	.012
20	.071	.026	.015	.085	.042	.012
16	.104	---	.015	.118	.065	.020
12	.140	---	0.025	.190	.096	.020
10	.171	---	.040	.250	.127	.030

FIGURE 12. Hermetic contact configuration and dimensions - Continued.

Downloaded from http://www.everyspec.com

Inches	mm	Inches	mm	Inches	mm	Inches	mm	Inches	mm
.0005	0.013	.0305	0.775	.052	1.32	.080	2.03	.112	2.84
.001	0.03	.035	0.89	.055	1.40	.082	2.08	.114	2.90
.003	0.08	.036	0.91	.061	1.55	.083	2.11	.118	3.00
.005	0.13	.038	0.97	.0615	1.562	.088	2.24	.120	3.05
.006	0.15	.039	0.99	.062	1.57	.093	2.36	.125	3.18
.008	0.20	.040	1.02	.0625	1.588	.094	2.39	.136	3.45
.010	0.25	.041	1.04	.0635	1.613	.095	2.41	.140	3.56
.011	0.28	.042	1.07	.067	1.70	.097	2.46	.141	3.58
.015	0.38	.045	1.14	.068	1.73	.099	2.51	.142	3.61
.020	0.51	.048	1.22	.069	1.75	.102	2.59	.156	3.96
.028	0.71	.050	1.27	.071	1.80	.103	2.62	.172	4.37
.0295	0.749	.051	1.30	.075	1.91	.104	2.64	.211	5.36
.0300	0.762								

NOTES:

1. Dimensions are in inches and over plating.
2. Metric equivalents are given for information only.
3. Size 10 contacts shall refuse entry to a .133 minimum diameter pin.
   Size 12 contacts shall refuse entry to a .102 minimum diameter pin.
   Size 16 contacts shall refuse entry to a .071 minimum diameter pin.
   Size 20 contacts shall refuse entry to a .048 minimum diameter pin.
   Size 22D contacts shall refuse entry to a .038 minimum diameter pin.
   Size 23 contacts shall refuse entry to a .035 minimum diameter pin.
   C dimension to be maintained for .060 minimum.
4. Dimensions shown effect interchangeability, function, and fit.
   Unless specified, other design features are optional.
5. A .0270 +/-.0005 diameter pin shall enter size 23 socket contact to the depth specified.
   A .0300 ±.0005 diameter pin shall enter size 22D socket contact to the depth specified.
   A .040 ±.001 diameter pin shall enter size 20 socket contact to the depth specified.
   A .0625 ±.001 diameter pin shall enter size 16 socket contact to the depth specified.
   A .094 ±.001 diameter pin shall enter size 12 socket contact to the depth specified.,
   A .125 ±.001 diameter pin shall enter size 10 socket contact to the depth specified.
6. Dimension H is the inner diameter of insert entry hole.
7. Edges are not permissible.
8. Dimensions shown are not applicable to size 10, 12 and 16 contacts. The termination end for style C, size 10, 12 and 16 contacts is dimension "A" throughout. Size 20 contacts are applicable to this design, but use of size 20 contacts is inactive for new design. Size 22 and size 22M contacts are inactive for new design.

FIGURE 12. Hermetic contact configuration and dimensions - Continued.

Downloaded from http://www.everyspec.com

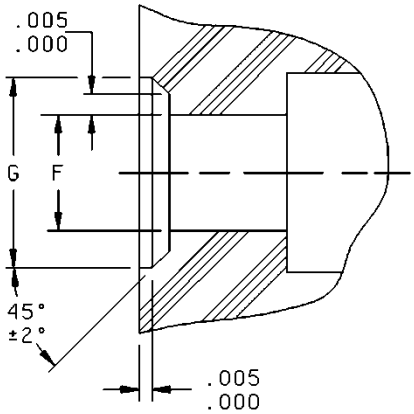

DETAIL A SOCKET ENTRY

Inches	mm
.000	0.00
.005	0.13

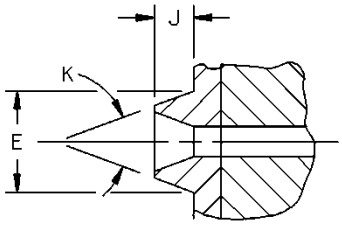

DETAIL B PIN BARRIER

Contact size	Detail A		Detail B		
	F dia	G dia	E dia	J	K
22 22D 22M (see note 4)	.038 (0.97) .035 (0.89)	.067 (1.70) .063 (1.60)	.077 (1.96) .069 (1.75)	.040 (1.02) .030 (0.76)	28° 26°
20	.052 (1.32) .049 (1.24)	.089 (2.26) .085 (2.16)	.099 (2.51) .091 (2.31)		
16	.074 (1.88) .071 (1.80)	.112 (2.84) .108 (2.74)	.122 (3.10) .114 (2.90)		
12	.106 (2.69) .103 (2.62)	.144 (3.66) .140 (3.56)	.154 (3.91) .146 (3.71)		

NOTES:
1. Dimensions are in inches.
2. Metric equivalents are given for information only.
3. Detail A is not applicable to hermetic or thru-bulkhead receptacles.
4. Size 22 and size 22M contacts are inactive for new design.

FIGURE 13. Interface design (series I and II).

Downloaded from http://www.everyspec.com

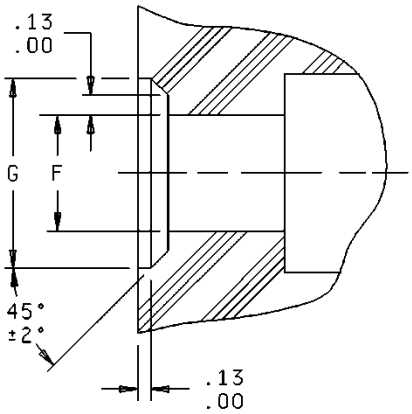

DETAIL A SOCKET ENTRY

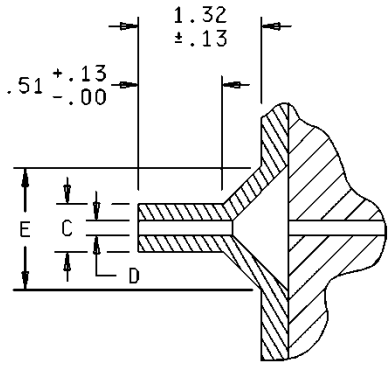

DETAIL B PIN BARRIER

Contact size	Detail A		Detail B		
	F dia	G dia	E dia	C dia	D dia max
23	0.89 (.035) 0.81 (.032)	1.52 (.060) 1.42 (.056)	1.50 (.059) 1.37 (.054)	1.22 (.048) 1.14 (.045)	0.64 (.025)
22D	0.97 (.038) 0.89 (.035)	1.70 (.067) 1.60 (.063)	1.88 (.074) 1.75 (.069)	1.35 (.053) 1.27 (.050)	0.71 (.028)
20	1.32 (.052) 1.24 (.049)	2.26 (.089) 2.16 (.085)	2.44 (.096) 2.31 (.091)	1.91 (.075) 1.83 (.072)	0.97 (.039)
16	1.88 (.074) 1.80 (.071)	2.84 (.112) 2.74 (.109)	3.02 (.119) 2.90 (.114)	2.49 (.098) 2.41 (.095)	1.52 (.060)
12	2.69 (.106) 2.62 (.103)	3.66 (.144) 3.56 (.140)	3.84 (.151) 3.71 (.146)	3.30 (.130) 3.23 (.127)	2.34 (.092)
10	3.48 (.137) 3.40 (.134)	4.45 (.175) 4.34 (.171)	4.62 (.182) 4.50 (.177)	4.09 (.161) 4.01 (.158)	3.12 (.123)
8 twinax or coax	5.84 (.230) 5.77 (.227)	6.81 (.268) 6.71 (.264)	7.06 (.278) 6.93 (.273)	6.50 (.256) 6.38 (.251)	5.49 (.216)

NOTES:

1. Dimensions are in millimeters.
2. Inch equivalents (in parentheses) are given for information only.
3. Detail A is not applicable to hermetic or thru-bulkhead receptacles.

FIGURE 14. Interface design (series III).

Downloaded from http://www.everyspec.com

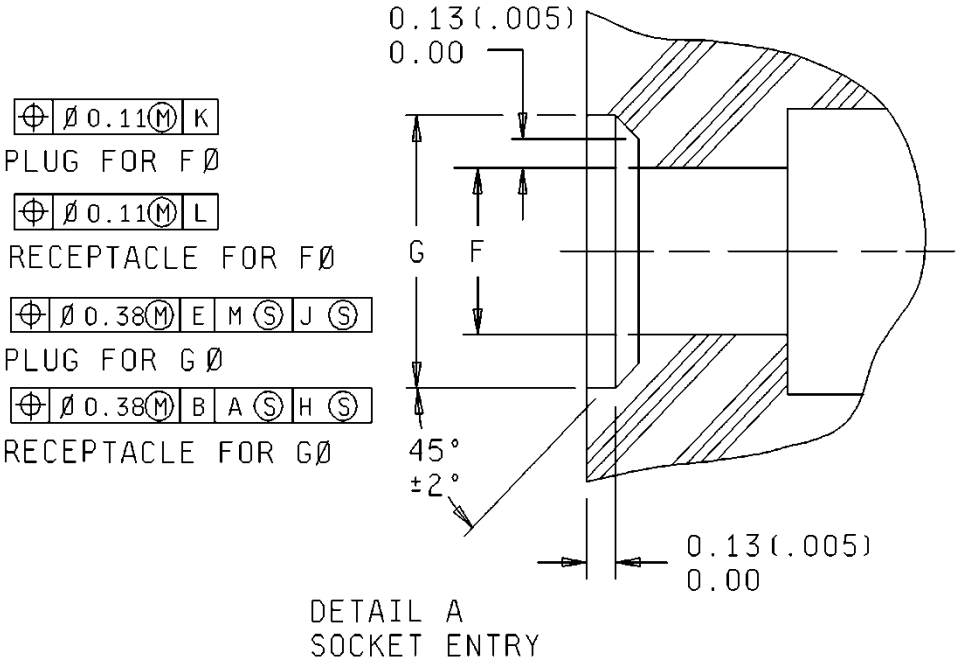

FIGURE 15. Interface design (series IV).

Downloaded from http://www.everyspec.com

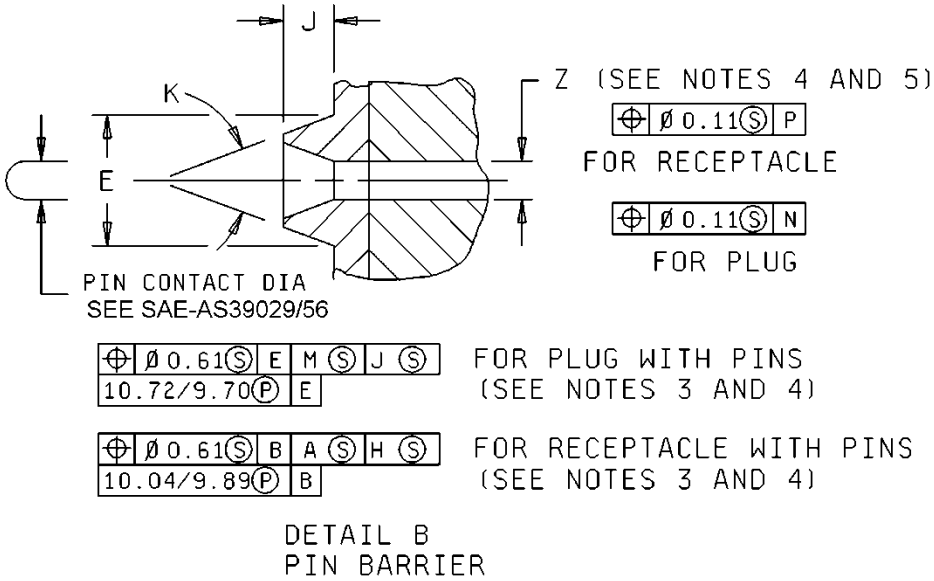

Contact size	Detail A		Detail B		
	F dia	G dia	E dia	J	K
22 22D 22M (see note 6)	0.97 (.038) 0.89 (.035)	1.70 (.067) 1.60 (.063)	1.96 (.077) 1.75 (.069)	1.02 (.040) 0.76 (.030)	28° 26°
20	1.32 (.052) 1.24 (.049)	2.26 (.089) 2.16 (.085)	2.51 (.099) 2.31 (.091)		
16	1.88 (.074) 1.80 (.071)	2.84 (.112) 2.74 (.108)	3.10 (.122) 2.90 (.114)		
12	2.69 (.106) 2.62 (.103)	3.66 (.144) 3.56 (.140)	3.91 (.154) 3.71 (.146)		

NOTES:

1. Dimensions are in millimeters, inch equivalents are in parentheses.
2. Detail A is not applicable to hermetic or thru-bulkhead receptacles.
3. Position tolerance is for pin contact only.
4. See figures 4 and 7 for datum A, B, D, E, H, J, K, L, M, N, and P.
5. Z is undefined for pin contact in pin insert.
6. Size 22 and size 22M contacts are inactive for new design.

FIGURE 15. Interface design (series IV) - Continued.

Downloaded from http://www.everyspec.com

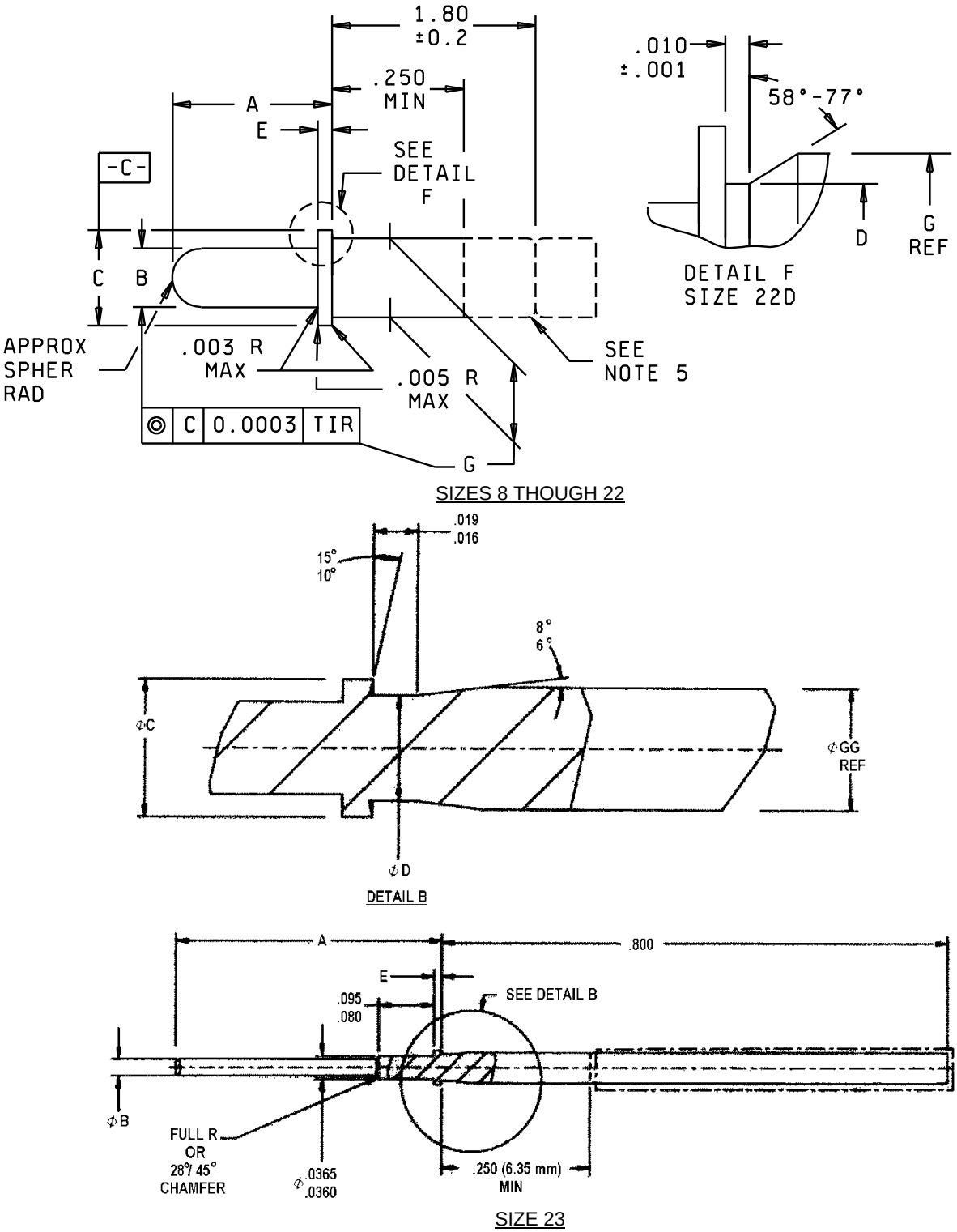

FIGURE 16. Test gauge, pin, gauge location, and retention (all series).

Downloaded from http://www.everyspec.com

Contact size	A +.0005 -.0000	B dia +.0002 -.0000	C dia +.0002 -.0000	D dia +.0000 -.0002	E +.0000 -.0002	G dia +.0000 -.0002
23	.4200	.0265	.0540	.0415	.0120	.0480
22D	.2950	.0295	.0600	.0410	.0330	.0480
20	"	.0390	.0910	---	"	.0700
16	"	.0615	.1270	---	"	.1030
12	"	.0930	.1790	---	"	.1510
10	"	.1240	.2380	---	"	.2130
8 twinax or coax	"	.2170	.3110	---	"	.2760

Inches	mm	Inches	mm	Inches	mm
.0002	0.005	.0390	0.991	.1270	3.226
.0003	0.008	.0410	1.041	.1510	3.835
.0005	0.013	.0480	1.219	.1790	4.547
.001	0.03	.0600	1.524	.2130	5.41
.003	0.08	.0615	1.562	.2170	5.51
.005	0.13	.0700	1.778	.2380	6.05
.010	0.25	.0910	2.311	.250	6.35
.02	0.5	.0930	2.362	.2760	7.01
.0295	0.749	.1030	2.616	.2950	7.493
.0330	0.838	.1240	3.15	1.80	45.7

NOTES:
1. Dimensions are in inches.
2. Metric equivalents are given for information only.
3. Material: Hardened tool steel.
4. Finish: 32 microinches polished.
5. Design of rear extension is optional, but must have a groove provided as specified.
6. Burrs and sharp edges shall be removed .005 inch max.

FIGURE 16. Test gauge, pin, gauge location, and retention (all series) - Continued.

Downloaded from http://www.everyspec.com

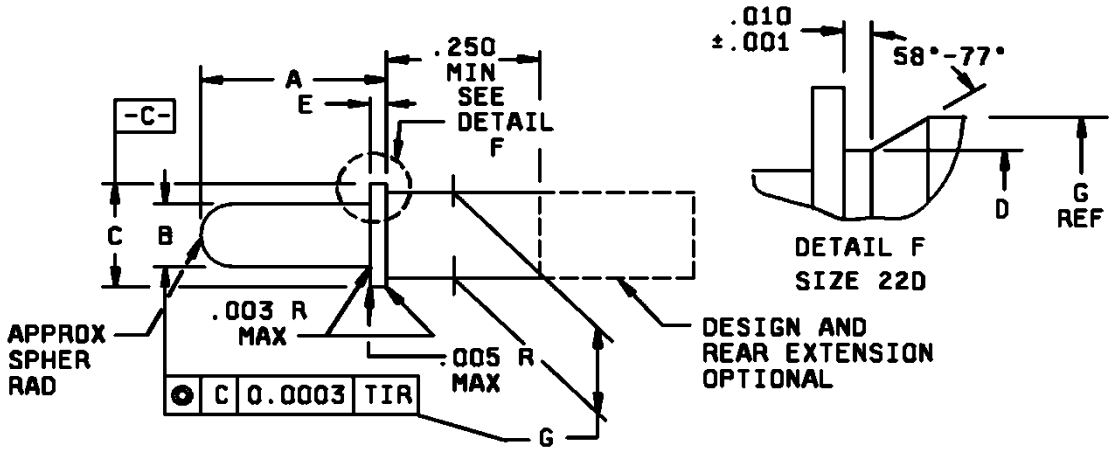

SIZES 8 THROUGH 22

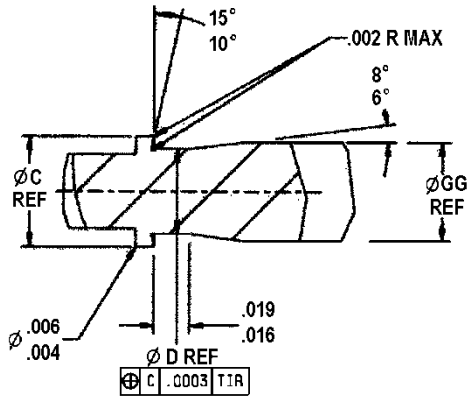

DETAIL B

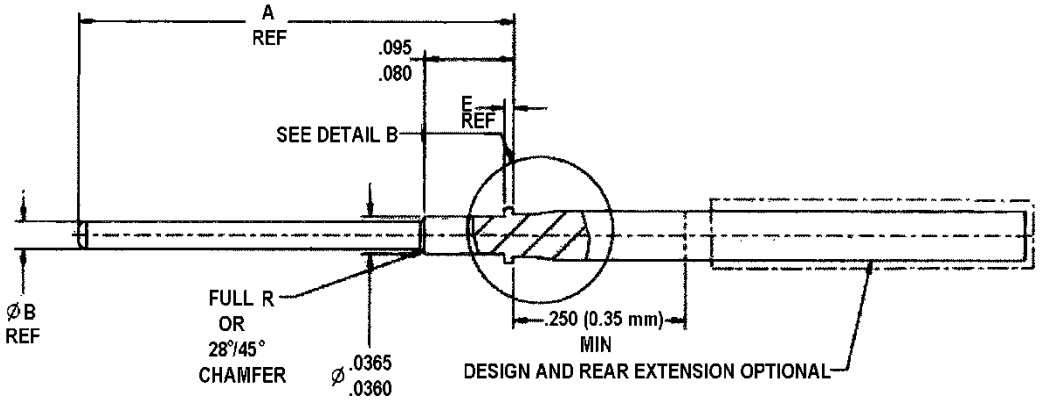

SIZE 23

FIGURE 17. Test gauge, pin, gauge location (all series).

Downloaded from http://www.everyspec.com

Contact size	A +.0005 -.0000	B dia +.0002 -.0000	C dia +.0002 -.0000	D dia +.0000 -.0002	E +.0000 -.0002	G dia +.0000 -.0002
23	.4260	.0265	.0540	.0415	.0090	.0480
22D	.3000	.0295	.0600	.0410	.0290	.0480
20	"	.0390	.0910	---	"	.0700
16	"	.0615	.1270	---	"	.1030
12	"	.0930	.1790	---	"	.1510
10	"	.1240	.2380	---	"	.2130
8 twinax or coax	"	.2170	.3110	---	"	.2760

Inches	mm	Inches	mm	Inches	mm
.0002	0.005	.0410	1.041	.1510	3.835
.0003	0.008	.0480	1.219	.1790	4.547
.0005	0.013	.0600	1.524	.2130	5.41
.001	0.03	.0615	1.562	.2170	5.51
.003	0.08	.0700	1.778	.2380	6.05
.005	0.13	.0910	2.311	.250	6.35
.010	0.25	.0930	2.362	.2760	7.01
.0290	0.737	.1030	2.616	.3000	7.620
.0295	0.749	.1240	3.15	.3110	7.899
.0390	0.991	.1270	3.226		

NOTES:
1. Dimensions are in inches.
2. Metric equivalents are given for information only.
3. Material: Hardened tool steel.
4. Finish: 32 microinches polished.
5. Burrs and sharp edges shall be removed .005 inch max.

FIGURE 17. Test gauge, pin, gauge location (all series) - Continued.

Downloaded from http://www.everyspec.com

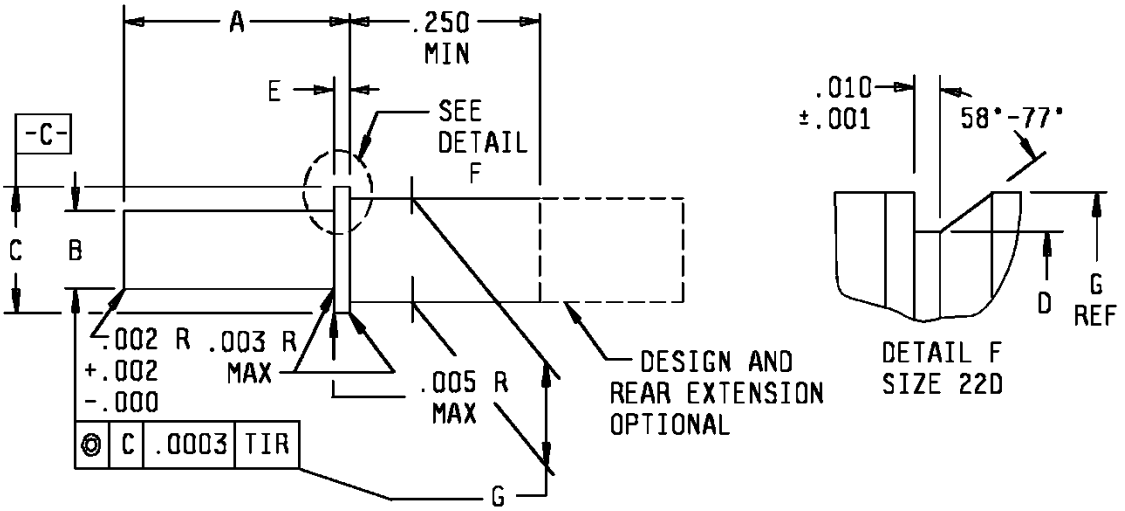

SIZE 8 THOUGH 22

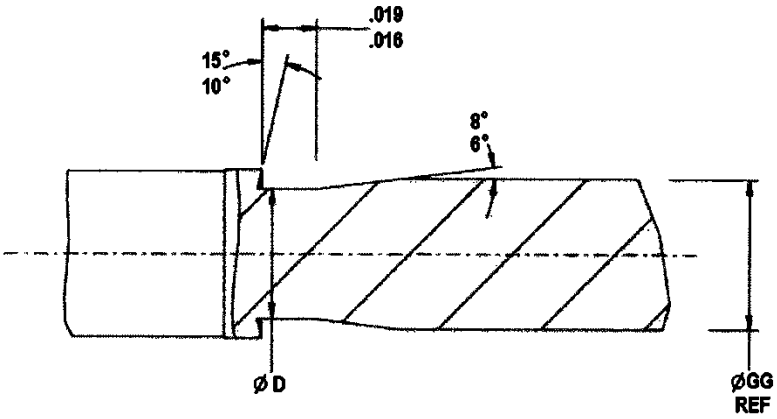

DETAIL B

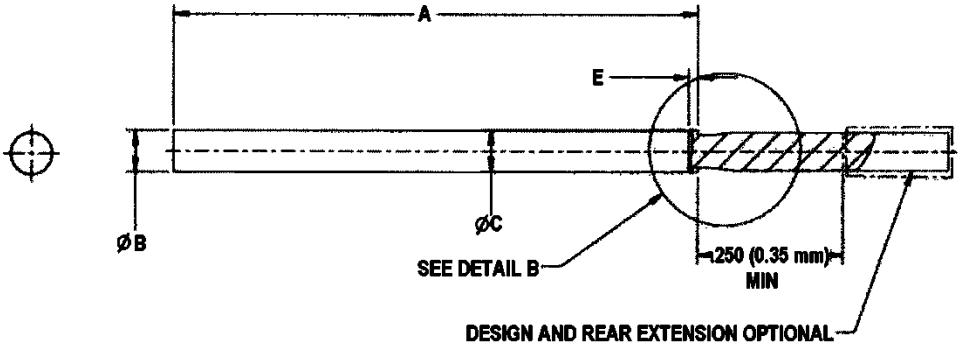

SIZE 23

FIGURE 18. Test gauge, socket, gauge location (series I, III, and IV).

Downloaded from http://www.everyspec.com

Contact size	A +.0005 -.0000	B dia +.0002 -.0000	C dia +.0002 -.0000	D dia +.0000 -.0002	E +.0000 -.0002	G dia +.0000 -.0002
23	.6780	.0540	.0540	.0415	.0120	.0480
22D	.5850	.0600	.0600	.041	---	.0480
20	"	.0770	.0910	---	.0330	.0700
16	"	.1120	.1270	---	"	.1030
12	"	.1600	.1790	---	"	.1510
10	"	.2190	.2380	---	"	.2130
8 twinax or coax	.5900	.2870	.3110	---	"	.2760

Inches	mm	Inches	mm	Inches	mm
.0002	0.005	.0480	1.219	.1790	4.547
.0003	0.008	.0600	1.524	.2130	5.41
.0005	0.013	.0700	1.778	.2190	5.56
.001	0.03	.0770	1.956	.2380	6.05
.002	0.05	.0910	2.311	.250	6.35
.003	0.08	.1030	2.616	.2760	7.01
.005	0.13	.1120	2.845	.2870	7.29
.010	0.25	.1270	3.226	.5850	14.859
.0330	0.838	.1510	3.835	.5900	14.99
.0410	1.041	.1600	4.064		

NOTES:
1. Dimensions are in inches.
2. Metric equivalents are given for information only.
3. Material: Hardened tool steel.
4. Finish: 32 microinches polished.
5. Dimension A conforms to point of spring engagement (C and Y, figures 1, 3, and 4).
6. Burrs and sharp edges shall be removed .005 inch max.

FIGURE 18. Test gauge, socket, gauge location (series I, III, and IV) - Continued.

Downloaded from http://www.everyspec.com

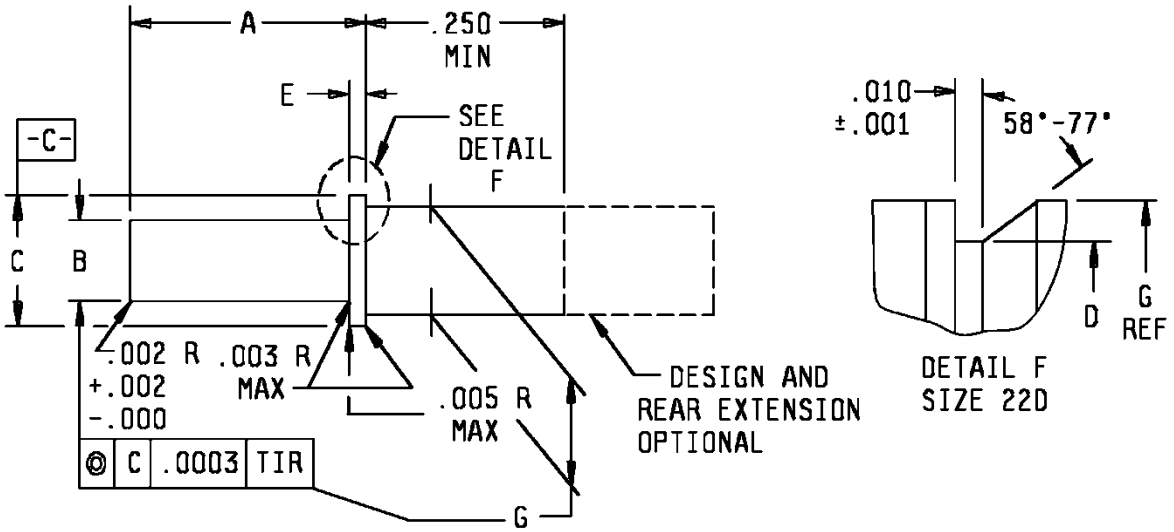

SIZE 12 THROUGH 22

Contact size	A +.0005 -.0000	B dia +.0002 -.0000	C dia +.0002 -.0000	D dia +.0000 -.0002	E +.0000 -.0002	G dia +.0000 -.0002
22D	.2480 (6.30)	.0600 (1.52)	.0600 (1.52)	.0410 (1.04)	---	.0480 (1.22)
20	"	.0770 (1.96)	.0910 (2.31)	---	.0330 (.84)	.0700 (1.78)
16	"	.1120 (2.84)	.1270 (3.23)	---	"	.1030 (2.62)
12	"	.1600 (4.06)	.1790 (4.55)	---	"	.1510 (3.84)

FIGURE 19. Test gauge, socket, gauge location (series II).

Downloaded from http://www.everyspec.com

Inches	mm	Inches	mm	Inches	mm
.0002	0.005	.0330	0.838	.1120	2.845
.0003	0.008	.0410	1.041	.1270	3.226
.0005	0.013	.0480	1.219	.1510	3.835
.001	0.03	.0600	1.524	.1600	4.064
.002	0.05	.0700	1.778	.1790	4.547
.003	0.08	.0770	1.956	.2480	6.299
.005	0.13	.0910	2.311		
.010	0.25	.1030	2.616		

NOTES:
1. Dimensions are in inches.
2. Metric equivalents are given for information only.
3. Material: Hardened tool steel.
4. Finish: 32 microinches polished.
5. Dimension A conforms to point of spring engagement (C and Y, figure 2).
6. Burrs and sharp edges shall be removed .005 inch max.

FIGURE 19. Test gauge, socket, gauge location (series II) - Continued.

Downloaded from http://www.everyspec.com

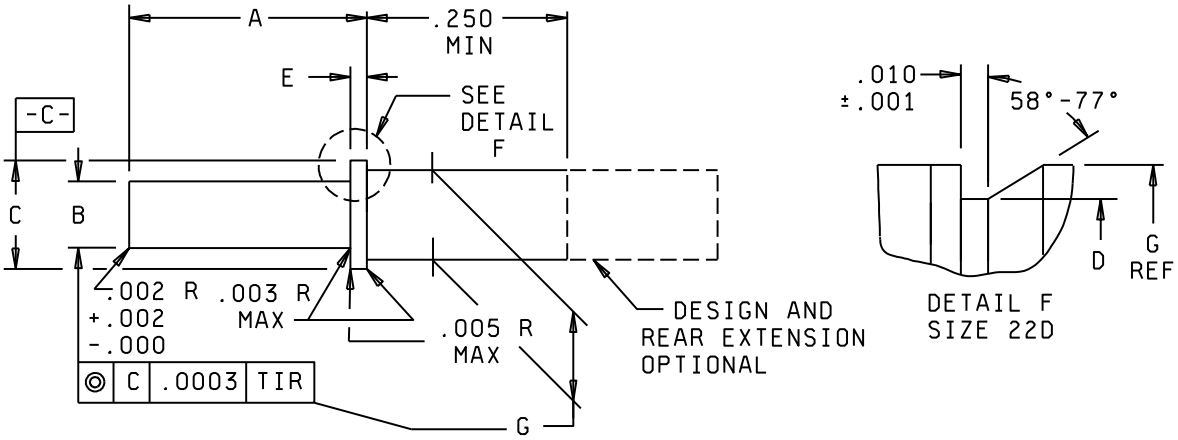

SIZE 8 THROUGH 22

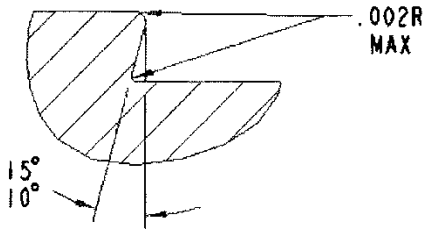

DETAIL A

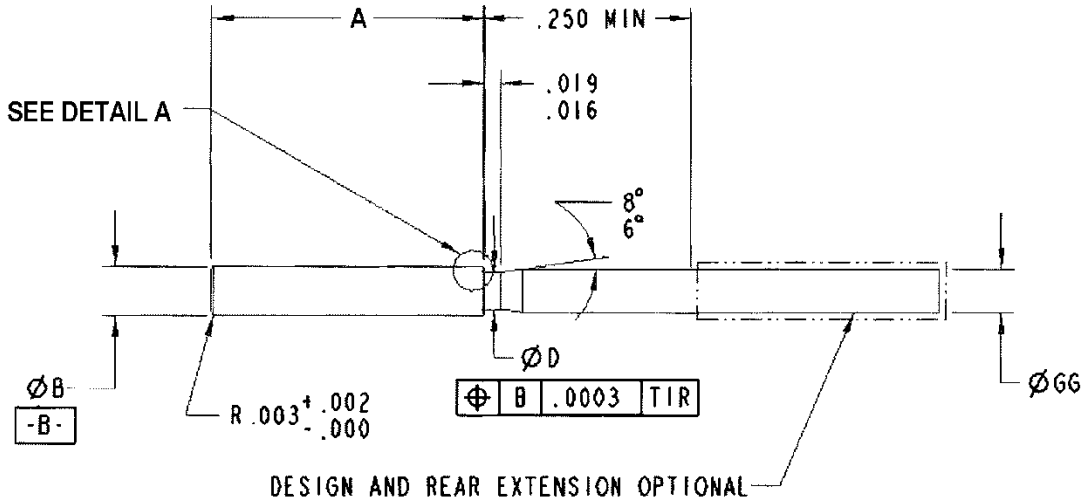

SIZE 23

FIGURE 20. Test gauge, socket, retention (series I, III, and IV).

Downloaded from http://www.everyspec.com

Contact size	A +.0005 -.0000	B dia +.0002 -.0000	C dia +.0002 -.0000	D dia +.0000 -.0002	E +.0000 -.0002	G dia +.0000 -.0002
23	.7260	.0540	-----	.0415	----	.0480
22D	.6260	.0600	.0600	.0410	---	.0480
20	"	.0770	.0910	---	.0330	.0700
16	"	.1120	.1270	---	"	.1030
12	"	.1600	.1790	---	"	.1510
10	"	.2190	.2380	---	"	.2130
8 twinax or coax	.6310	.2870	.3110	---	"	.2760

Inches	mm	Inches	mm	Inches	mm
.0002	0.005	.0480	1.219	.1790	4.547
.0003	0.008	.0600	1.524	.2130	5.41
.0005	0.013	.0700	1.778	.2190	5.56
.001	0.03	.0770	1.956	.2380	6.05
.002	0.05	.0910	2.311	.250	6.35
.003	0.08	.1030	2.616	.2760	7.01
.005	0.13	.1120	2.845	.2870	7.29
.010	0.25	.1270	3.226	.3110	7.90
.0330	0.838	.1510	3.835	.6260	15.900
.0410	1.041	.1600	4.064	.6310	16.03

NOTES:
1. Dimensions are in inches.
2. Metric equivalents are given for information only.
3. Material: Hardened tool steel.
4. Finish: 32 microinches polished.
5. Burrs and sharp edges shall be removed .005 inch max.

FIGURE 20. Test gauge, socket, retention (series I, III, and IV) - Continued.

Downloaded from http://www.everyspec.com

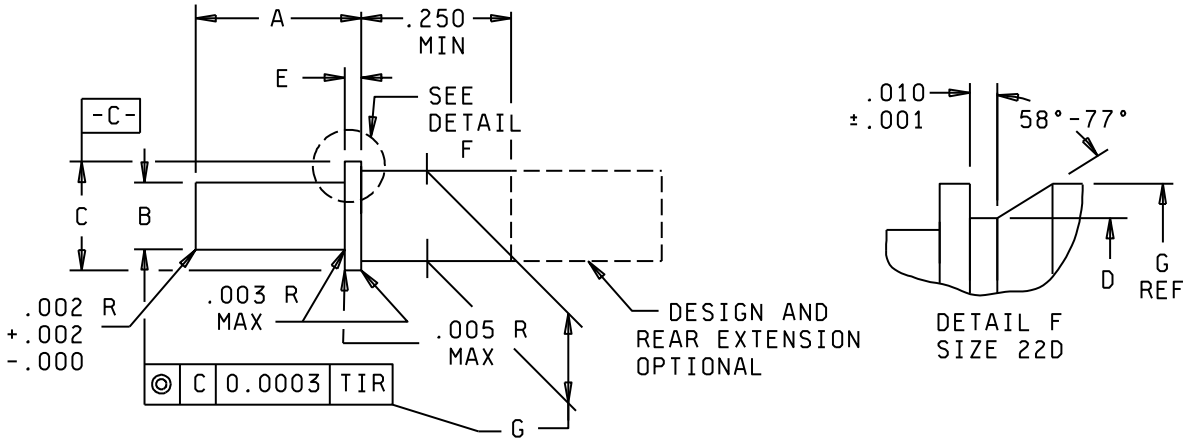

SIZE 12 THROUGH 22

Contact size	A +.0005 -.0000	B dia +.0002 -.0000	C dia +.0002 -.0000	D dia +.0000 -.0002	E +.0000 -.0002	G dia +.0000 -.0002
22D	.2890 (7.34)	.0600 (1.52)	.0600 (1.52)	.0410 (1.04)	---	.0480 (1.22)
20	"	.0770 (1.96)	.0910 (2.31)	---	.0330 (.84)	.0700 (1.78)
16	"	.1120 (2.84)	.1270 (3.23)	---	"	.1030 (2.62)
12	"	.1600 (4.06)	.1790 (4.55)	---	"	.1510 (3.84)

FIGURE 21. Test gauge, socket, retention (series II).

Downloaded from http://www.everyspec.com

Inches	mm	Inches	mm	Inches	mm
.0002	0.005	.0330	0.838	.1120	2.845
.0003	0.008	.0410	1.041	.1270	3.226
.0005	0.013	.0480	1.219	.1510	3.835
.001	0.03	.0600	1.524	.1600	4.064
.002	0.05	.0700	1.778	.1790	4.547
.003	0.08	.0770	1.956	.250	6.35
.005	0.13	.0910	2.311	.2890	7.341
.010	0.25	.1030	2.616		

NOTES:
1. Dimensions are in inches.
2. Metric equivalents are given for information only.
3. Material: Hardened tool steel.
4. Finish: 32 microinches polished.
5. Burrs and sharp edges shall be removed .005 inch max

FIGURE 21. Test gauge, socket, retention (series II) - Continued.

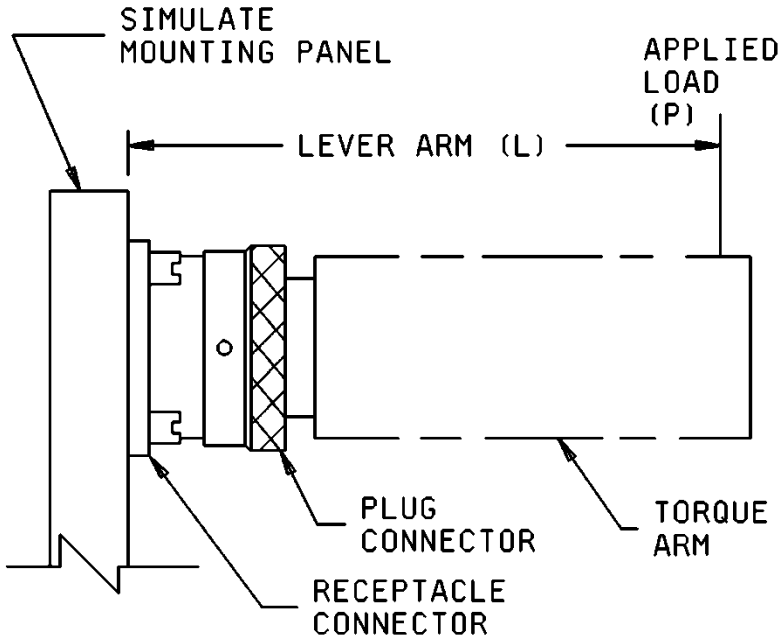

FIGURE 22. External bending moment test setup.

Downloaded from http://www.everyspec.com

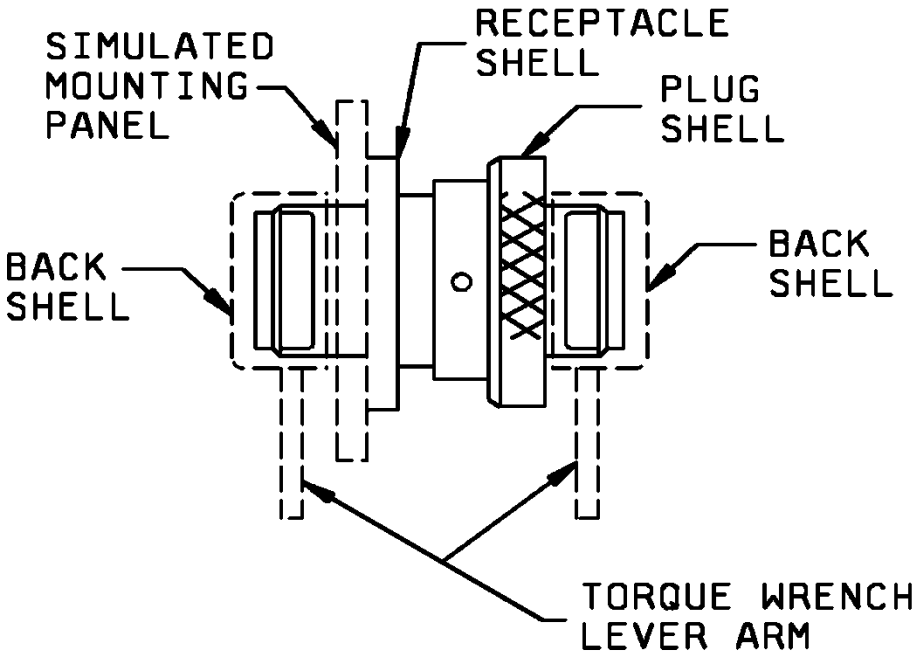

FIGURE 23. Rear accessory thread strength test.

Downloaded from http://www.everyspec.com

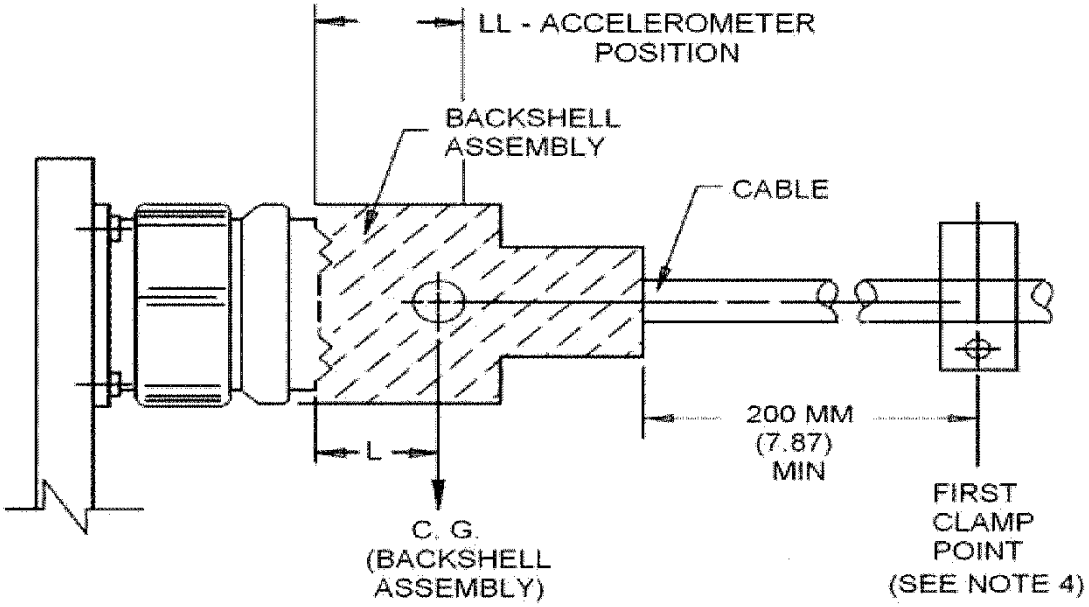

Shell size	L (mm) root to C.G. + 10% - 0%	Weight (kg) backshell assembly + 10% - 0%	LL (mm) ± 1
9	15.24	.05	10.2
11	17.78	.06	10.2
13	19.05	.07	17.8
15	19.05	.09	25.4
17	19.05	.11	25.4
19	22.86	.18	30.5
21	22.86	.22	30.5
23	23.37	.25	35.6
25	23.37	.31	35.6

NOTES:
1. Dimensions are in millimeters.
2. Shape of test accessory is optional.
3. The test accessory may include a strain relief clamp.
4. For series III, clamp point to be located on vibration table, and cable weight between rear of grommet and tie down clamp point to be considered a portion of the backshell assembly weight. Clamp point for series I and IV is to be on nonvibrating member.

FIGURE 24. Series I, III, and IV vibration test accessory.

Downloaded from http://www.everyspec.com

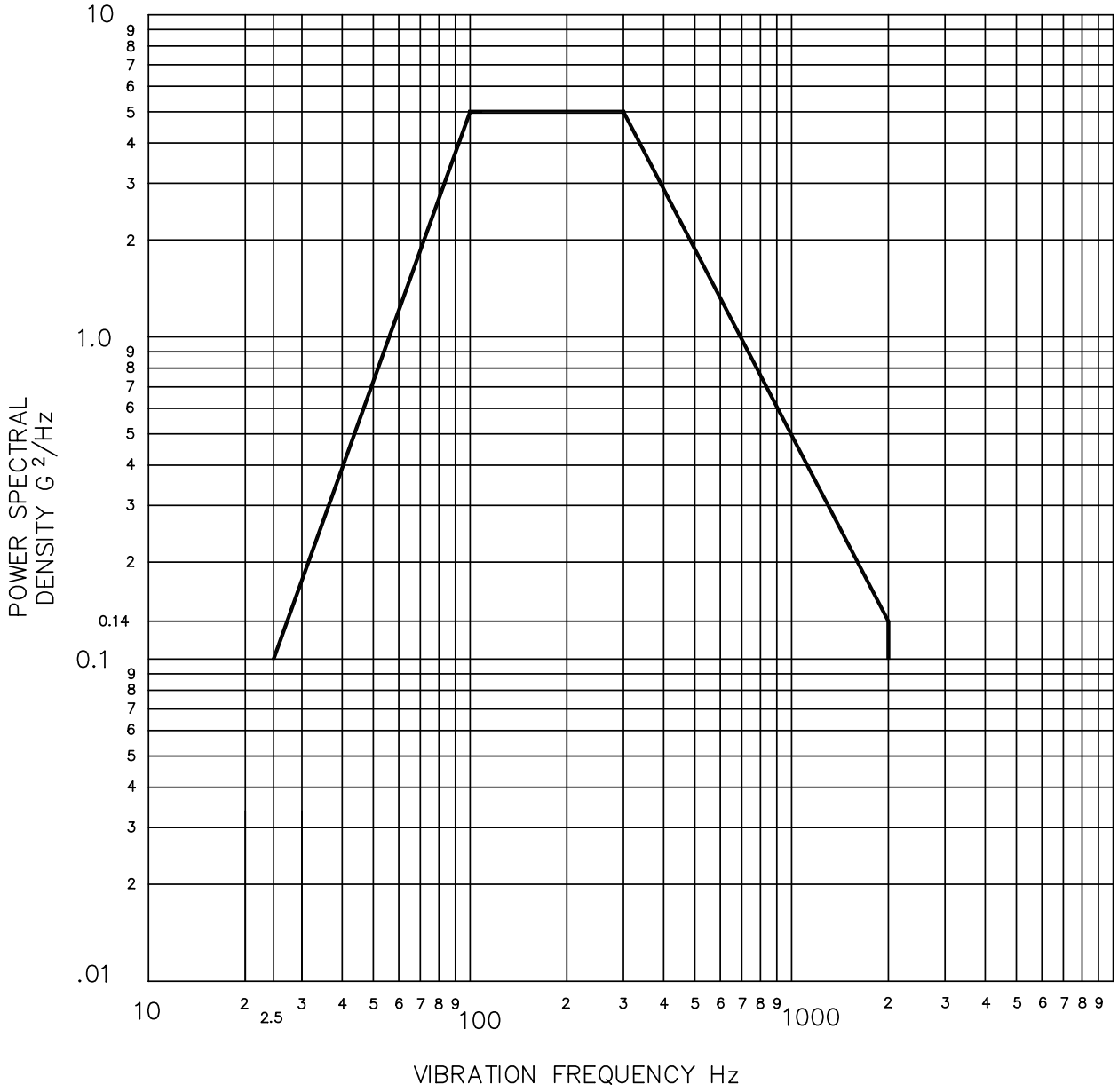

FIGURE 25. Random vibration (series I, III and IV).

Downloaded from http://www.everyspec.com

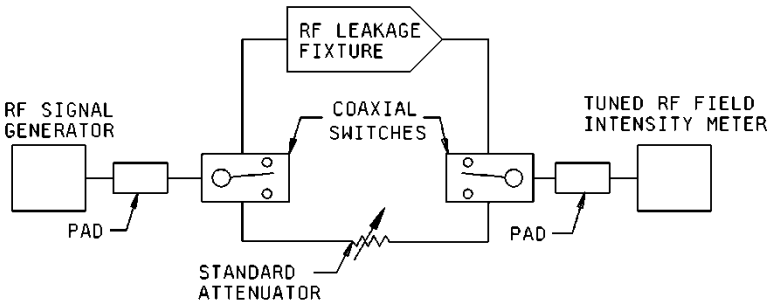

SCHEMATIC TEST SYSTEM

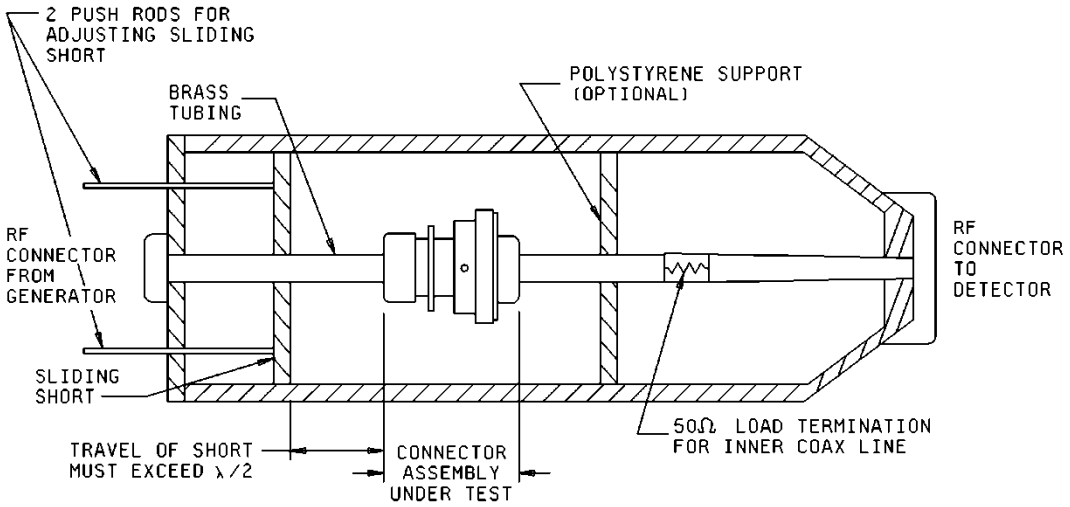

FIGURE 26. RFI leakage test fixture.

Downloaded from http://www.everyspec.com

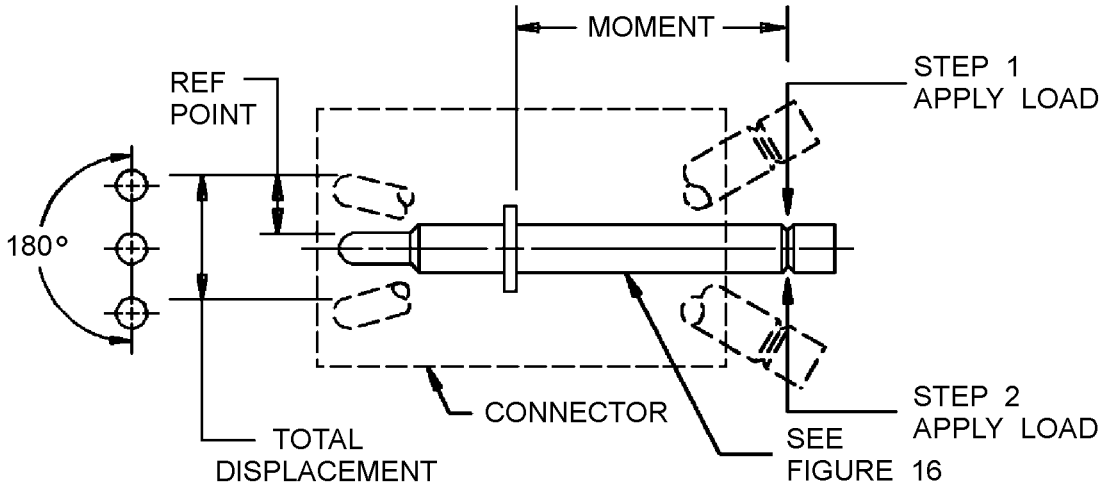

Step 1 - Apply load to determine reference point.

Step 2 - Apply load to opposite direction (180°) and measure total displacement.

FIGURE 27. Pin contact stability test.

Downloaded from http://www.everyspec.com

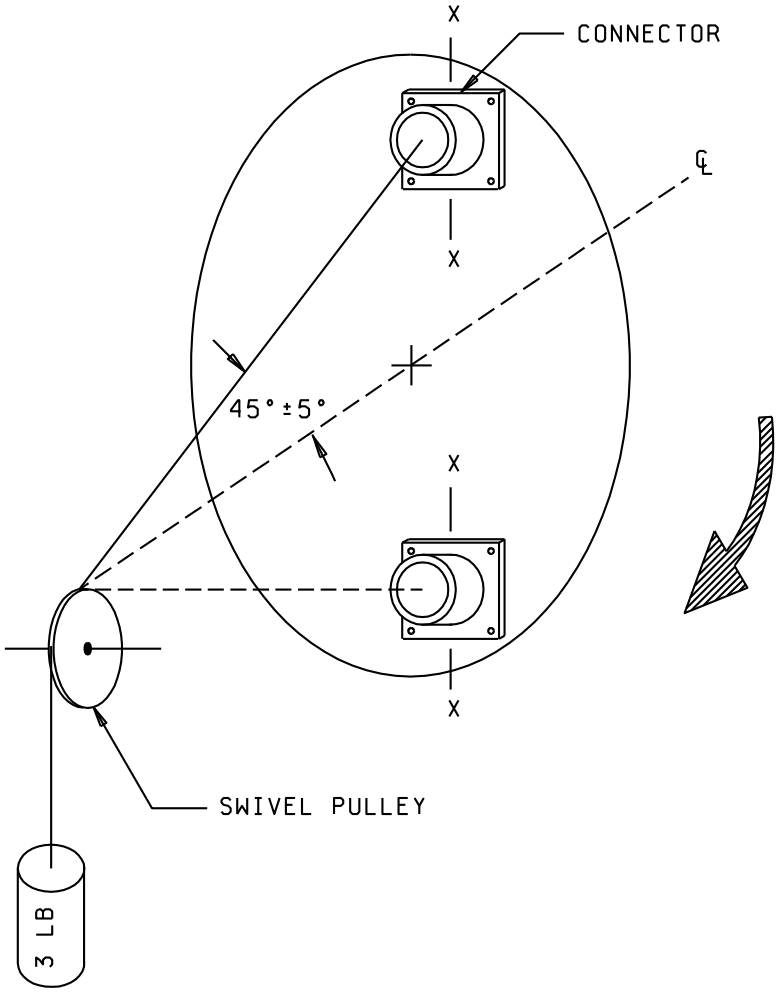

FIGURE 28. Contact walk-out test setup.

Downloaded from http://www.everyspec.com

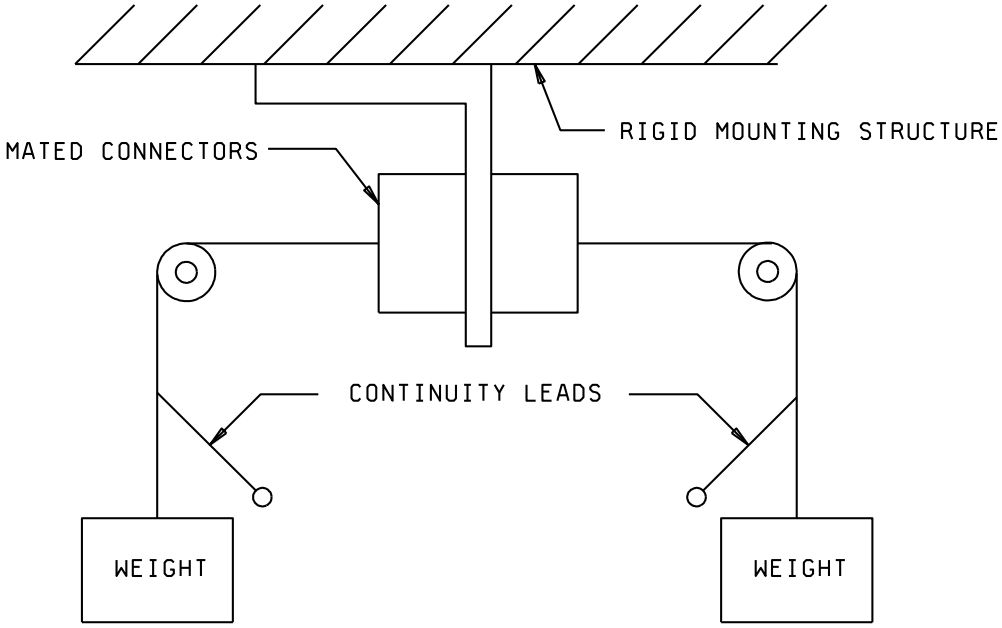

FIGURE 29. Typical fixturing for temperature life with contact loading (orientation optional).

Downloaded from http://www.everyspec.com

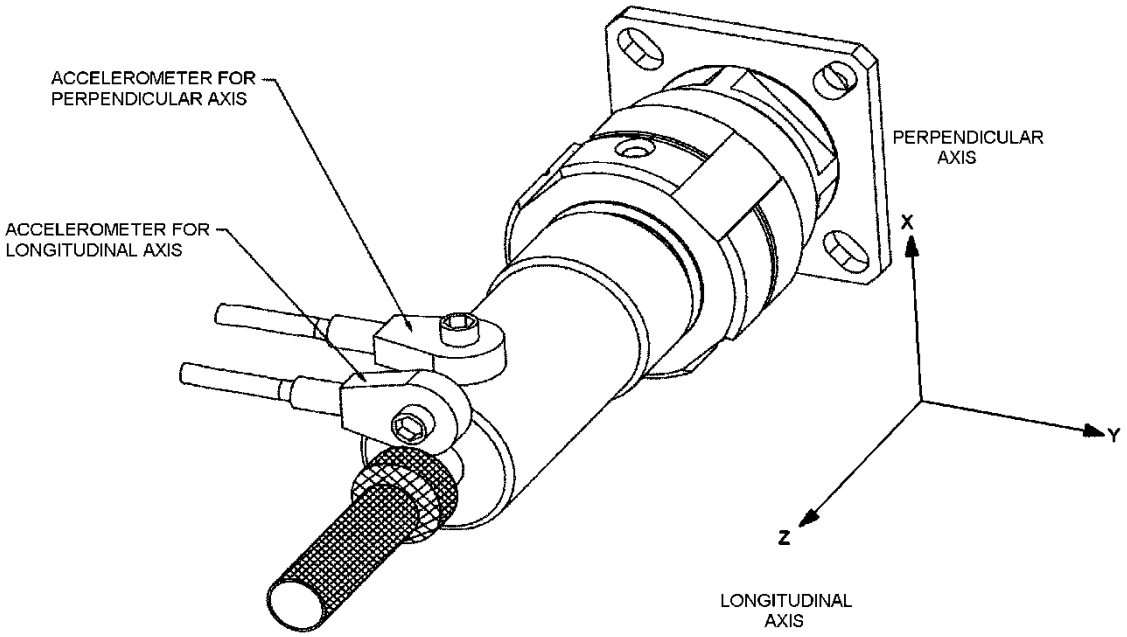

FIGURE 30. Vibration test setup for metal-to-metal shell bottoming verification.

Downloaded from http://www.everyspec.com

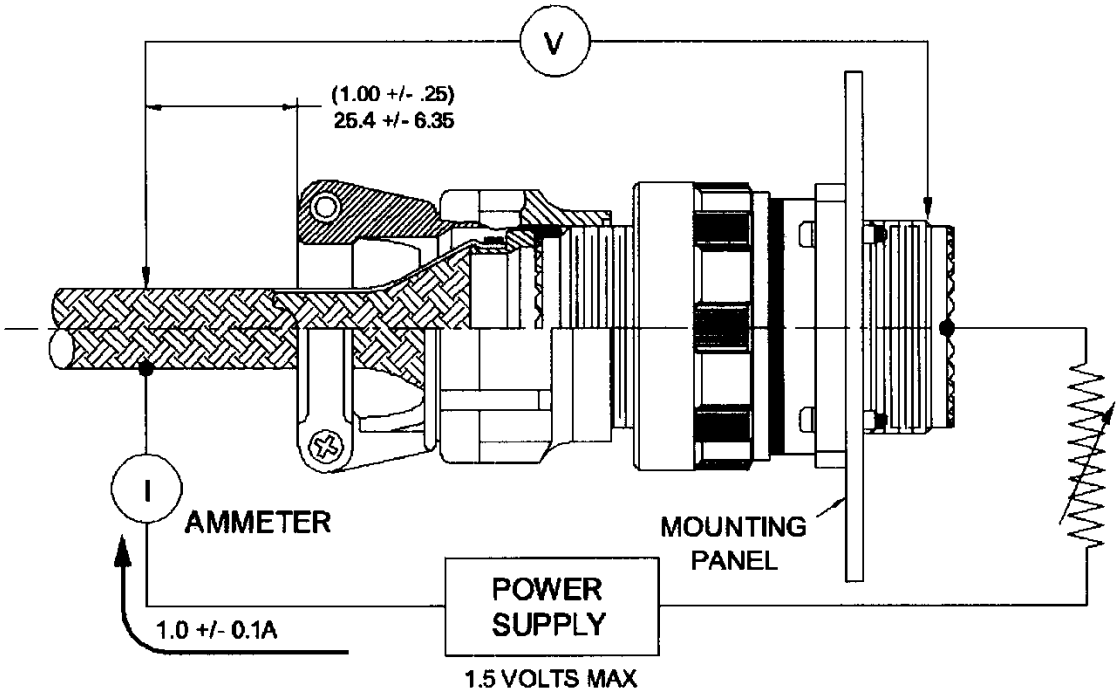

FIGURE 31. Backshield braid-to-shell conductivity.

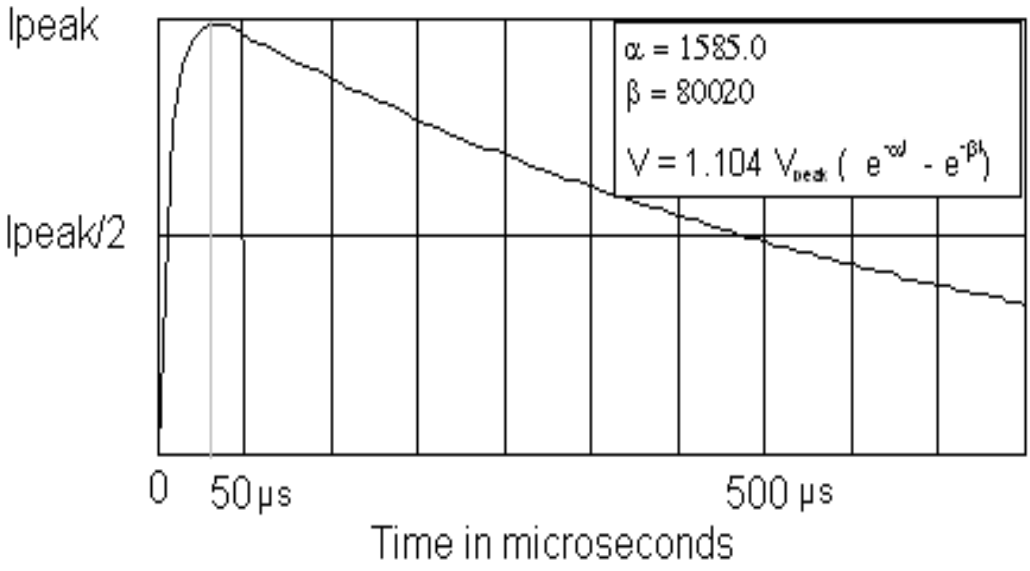

FIGURE 32. Waveform for indirect lightning strike effects.

Downloaded from http://www.everyspec.com

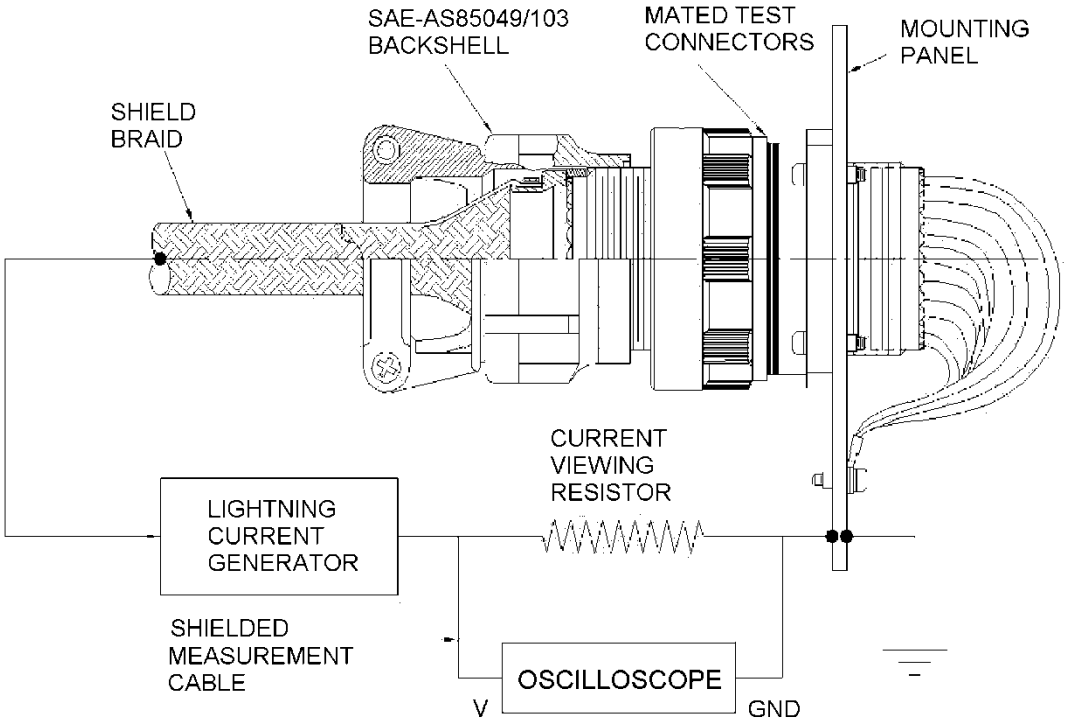

FIGURE 33. Indirect lightning strike test setup.

CONCLUDING MATERIAL

Custodians:
Army - CR
Navy - AS
Air Force - 85
DLA - CC

Preparing activity:
DLA - CC

(Project 5935-2016-144)

Review activities:
Army - AR, MI
Navy - EC, MC, OS
Air Force - 19, 99
Other - MDA

NOTE: The activities listed above were interested in this document as of the date of this document. Since organizations and responsibilities can change, you should verify the currency of the information above using the ASSIST Online database at https://assist.dla.mil.