Downloaded from http://www.everyspec.com

NOT MEASUREMENT SENSITIVE

MIL-DTL-38807D(USAF)
w/AMENDMENT 2
27 March 2020

SUPERSEDING
MIL-DTL-38807D(USAF)
w/AMENDMENT 1
22 August 2017

DETAIL SPECIFICATION
MANUALS, TECHNICAL - ILLUSTRATED PARTS BREAKDOWN

Comments, suggestions, or questions on this document should be addressed to AFLCMC/HIS Technical Data Section, 4170 Hebble Creek Road, Bldg. 280, Door 15, Area A, Wright-Patterson AFB, OH 45433-5653 or emailed to SGMLsupport@us.af.mil. Since contact information can change, you may want to verify the currency of this address information using the ASSIST Online database at https://assist.dla.mil.

AMSC 10139 **AREA TMSS**

Downloaded from http://www.everyspec.com

This specification is approved for use by the Department of the Air Force and is available for use by all Departments and Agencies of the Department of Defense.

1 SCOPE

1.1 Scope. This specification covers the requirements for the preparation of Illustrated Parts Breakdown (IPB) Technical Manuals (TM). The TMs are to be prepared in single or subdivided format, or as a chapter of a maintenance/operation or overhaul manual, as specified by the acquiring activity (see 6.2b). This specification provides for electronic delivery of data through the use of markup language tools as specified in A.1.

1.2 Detail. DELETED.

1.3 Illustrations in this specification. The illustrations appearing in this specification are used only as examples. If there is any conflict between the text and illustrations of this document, the text applies.

2 APPLICABLE DOCUMENTS

2.1 General. The documents listed in this section are specified in sections 3 and 4 of this specification. This section does not include documents cited in other sections of this specification or recommended for additional information or as examples. While every effort has been made to ensure the completeness of this list, document users are cautioned that they must meet all specified requirements of documents cited in sections 3 and 4 of this specification, whether or not they are listed.

2.2 Government documents.

2.2.1 Specifications, standards, and handbooks. The following specifications, standards, and handbooks form a part of this document to the extent specified herein. Unless otherwise specified, the issues of these documents are those cited in the solicitation or contract.

DEPARTMENT OF DEFENSE SPECIFICATIONS

MIL-DTL-83495	Manuals, Technical - On-Equipment Maintenance Manual Set
MIL-DTL-87929	Manuals, Technical - Operation and Maintenance Instructions in Work Package Format (for USAF Equipment)

DEPARTMENT OF DEFENSE STANDARDS

MIL-STD-1808	Standard System Subsystem Sub-Subsystem Numbering
MIL-STD-38784	General Style and Format Requirements for Technical Manuals

(Copies of these documents are available online at https://quicksearch.dla.mil).

2.2.2 Other Government documents, drawings, and publications. The following other Government documents, drawings, and publications form a part of this document to the extent specified herein. Unless otherwise specified, the issues of these documents are those cited in the solicitation or contract.

DOD INSTRUCTIONS

DoDI 5330.03	DEFENSE LOGISTICS AGENCY (DLA) DOCUMENT SERVICES

(Copies of these documents are available online at http://www.esd.whs.mil/DD/).

AIR FORCE TECHNICAL MANUALS

TO 00-25-195	AF Technical Order System Source, Maintenance, and Recoverability Coding of Air Force Weapons, Systems, and Equipments
TO 00-25-234	General Shop Practice Requirements for the Repair, Maintenance, and Test of Electrical Equipment

(Copies of these documents required by users with ".mil" government web address access are available online at https://www.my.af.mil/etims/ETIMS/index.jsp. Copies of documents required by contractors in connection with specific procurement functions should be obtained from the acquiring activity or as directed by the contracting officer.)

Downloaded from http://www.everyspec.com

2.3 Order of precedence. Unless otherwise noted herein or in the contract, in the event of a conflict between the text of this document and the references cited herein, the text of this document takes precedence. Nothing in this document, however, supersedes applicable laws and regulations unless a specific exemption has been obtained.

3 REQUIREMENTS

3.1 Preparation. The general manner of preparation shall be in accordance with the requirements of MIL-STD-38784. Appendix A provides information for obtaining digital tools for the preparation and delivery of illustrated parts breakdown manuals.

3.1.1 Technical Manual (TM) PDF or paper functionality/formatting requirements. As specified by the acquiring activity (see 6.2e), the PDF or paper output unique functionality/formatting requirements shall apply for the development of all manuals specified herein (see 6.5.2 and 6.5.3).

3.1.2 IPB manual size. IPB manuals shall be prepared in the 8.5 by 11-inch size.

3.2 Manual layout. When the maintenance instructions for the equipment are in a single manual, the IPB shall also be in a separate single manual, except as specified in 3.2.1 and 3.2.2. All parts of the end item shall be listed in accordance with the requirements found elsewhere in this specification, regardless of the level of coverage (organizational, intermediate, or depot) of the associated maintenance manual(s).

3.2.1 Combined manuals. When specified by the acquiring activity (see 6.2f), the IPB shall be included in the maintenance instructions manual as the last chapter or last Work Package (WP) and numbered in accordance with MIL-DTL-87929 (MIL-STD-38784 for legacy). However, if difference data sheets are to be included, the IPB shall precede them. Chapter 1 (see 3.5) material shall be included in the manual introduction or, when using MIL-DTL-87929 format, in the IPB WP introduction. Chapter 3 (see 3.7) and 4 (see 3.8) material shall follow the Maintenance Parts List (MPL) (see 3.6).

Paper output: Combined manuals shall not exceed 800 page units (including foldouts).

3.2.2 Subdivided manual. When specified by the acquiring activity (see 6.2g), the IPB manual MPL chapter shall be subdivided to follow the chapter or WP structure of the maintenance manuals. Each subdivision shall be assigned a separate Technical Order (TO) number, for example, 1X-XX-4-1, 1X-XX-4-2, 1X-XX-4-3, etc.

Paper output: Chapters 1, 3, and 4 shall be combined in the first TM if it will not cause the manual to exceed 800 pages. The sequence shall be: Introduction, Numerical Index, and Reference Designation Index. If combining chapters would cause the first TM to exceed 800 pages, chapter 1 shall be included in the first TM and chapters 3 and 4 in the last TM.

3.3 Arrangement. The manual shall contain as applicable:

Front Matter (see 3.4).
Chapter 1 - Introduction (see 3.5).
Chapter 2 - Maintenance Parts List (see 3.6).
Chapter 3 - Numerical Index (see 3.7).
Chapter 4 - Reference Designator Index and System Subsystem Sub-subsystem Number (SSSN) Index (see 3.8).

3.4 Front matter. Front matter shall be prepared in accordance with the requirements of MIL-STD-38784 with the following exceptions:

3.4.1 Table of contents. The illustrations shall be listed by title in alphabetical order. When portions of an IPB are divided into groups, systems, etc., illustration titles shall be listed below group, system, etc. For combined manuals, the illustrations shall be listed in the manual's list of illustrations, if used. Otherwise, they shall be listed as previously described.

In lieu of a separate list of illustrations, illustration titles shall be a part of the Table of Contents. Under the “Chapter 2 Maintenance Parts List” heading in the Table of Contents, the title of each illustration and its appropriate page number shall be shown.

Downloaded from http://www.everyspec.com

3.4.2 Introduction. Introduction requirements of MIL-STD-38784 shall be contained in Chapter 1, Introduction (see 3.5).

3.4.2.1 List of Related Publications (LRP). In addition to the requirements of MIL-STD-38784, separate IPB manuals for accessories, components, assemblies, vendor items, etc., shall be listed. The list shall include the part number and shall be listed in alphanumeric sequence by part number. Model or type number shall be used when no part number has been assigned. If applicable, the publication number and title for a power package buildup manual with IPB shall also be listed.

3.5 Chapter 1, Introduction. Chapter 1 shall contain the following:

3.5.1 Model(s) covered. A listing of the models, types, configurations, modifications, task numbers, and series or blocks of the end item covered by the manual.

3.5.2 Serialization. When specified by the acquiring activity (see 6.2h), the serialization table shall be used to specify "Usable On" codes.

3.5.3 Finding part numbers, illustration, description.

When the MPL exceeds 16 pages, an illustrated explanation (see figure 1) shall be included to describe:

a. How to find a part number or description using the table of contents and illustration titles.

b. How to find the illustration or description if a part number or reference designator is known.

3.5.4 Listing of similar assemblies. An explanation of the method used to list parts of similar assemblies shall be included (see 3.6.9.7).

3.5.5 Parts in kits or quick change units. When repair parts are supplied in the form of kits or quick change units, an explanation shall be included, and shall include information on determining what parts are included.

3.5.6 Symbols. An explanation of the dash (-) (see 3.6.7.1.4), number sign (#) (see 3.6.9.2 and 3.6.10.3), asterisk (*) (see 3.6.9.9), and "F" (see 3.7.2.2 and 3.8.2.2) symbols shall be included.

3.5.7 Sheet number explanation. If multisheet illustrations are used, an explanation shall be included that the sheet number follows the index number and is separated with a slash (/) (see 3.6.7.1). The explanation shall also state that, if an indexed item is on more than one sheet of an illustration, the first and last sheet numbers on which the item appears are given.

3.5.8 Usable on codes. Definitions of the usable on codes used in the MPL of the manual shall be provided. An explanation that codes are omitted for assemblies and parts installed in all configurations of the end items covered in the manual shall be included. Codes shown shall not be limited to the initial production configuration of a part or assembly.

3.5.9 Source, Maintenance, and Recoverability (SMR) codes. The following statement shall be included: "This manual contains Joint Military Service Uniform Source, Maintenance, and Recoverability (SMR) codes. Definitions of these SMR codes are available in TO 00-25-195."

3.5.10 Nuclear hardness. If equipment covered has nuclear survivability requirements (for example, Over Pressure and Burst, Thermal Radiation, Electromagnetic Pulse, or Transient Radiation Effects on Electronics), all Hardness Critical Items (HCI) shall be marked with HCI. Unless otherwise specified by the acquiring activity, all HCIs shall be marked with the symbol immediately preceding the description of the item (see 3.6.7.4a and 6.2i). When approved by the acquiring activity, **HCI** may be used in lieu of the boxed HCI symbol (see 6.2i).

3.5.10.1 Nuclear hardness symbol explanation. Chapter 1 shall include a listing and explanation of the HCI symbol and other pertinent information, as necessary, to emphasize the uniqueness of hardness features. This shall include an explanation that the HCI symbol establishes special requirements limiting changes and substitutions, and that the specific parts listed must be used to ensure hardness is not degraded. This statement shall be preceded by a CAUTION heading. All changes to, or proposed substitutions of, HCIs must be specified by the acquiring activity (see 6.2j).

Downloaded from http://www.everyspec.com

3.5.11 Electrostatic Discharge Sensitive (ESDS) parts. If equipment covered contains ESDS parts, they shall be marked as shown in TO 00-25-234 (see figure 8). Unless otherwise specified by the acquiring activity (see 6.2k), all ESDS parts shall be marked with the ESDS symbol immediately preceding the description of the item (see 3.6.7.4a). When specified by the acquiring activity, **ESDS** may be used in lieu of the ESDS symbol (see 6.2k).

3.5.11.1 ESDS symbol explanation. Chapter 1 shall include a listing and explanation of the ESDS symbol. Other pertinent information shall be included as necessary to emphasize the uniqueness of ESDS parts. This shall include an explanation that the ESDS symbol requires that all ESDS parts be handled in accordance with the ESDS device handling procedures in TO 00-25-234. This explanation shall be preceded by a CAUTION heading.

3.5.12 Parts standardization. The following paragraph shall be included in the introduction chapter:

> "Parts Standardization. Authority for use of a part number different than the part number listed in this IPB is established by the Department of Defense (DoD) Interchangeability and Substitution (I&S) Program. Refer to the D043B Master Item Identification Base for Air Force I&S information. The maintenance technician has final responsibility and authority for determining acceptability of substitute parts."

3.5.13 Manufacturers list. When specified by the acquiring activity (see 6.2l), a manufacturers list shall be provided. The list shall contain the Commercial and Government Entity (CAGE) code and the name and address of all manufacturers whose CAGE codes are referenced in the MPL.

3.6 Chapter 2, Maintenance parts list (MPL). The MPL shall contain:

a. A breakdown of the assemblies and parts contained in the end item(s) or sold to the government as a peculiarly configured spare. These assemblies can be disassembled, repaired, obtained from reclamation, manufactured, reinstalled, replaced, or reassembled, in agreement with government assigned Source, Maintenance, and Recoverability (SMR) coding (see 3.6.5 for exceptions). The listings shall follow the same sequence they are discussed in the applicable maintenance manual. If the maintenance manual discusses the compressor, augmenter, and accessories, in that sequence, the MPL shall list these components and their detail parts in the same sequence (see 3.6.7 for additional information on the sequence of listing parts).

b. Oversize and undersize parts, attaching parts, undrilled/untrimmed parts, repair parts kits, quick change units, decalcomanias, markings, etc.

c. Special support equipment (other than test equipment), which must be designed and developed in conjunction with development of the end item. This equipment may be locally manufactured for use with the end item for which no separate IPB manual has been procured. When such equipment is source coded MO, MF, or MD in the SMR column, the drawing number shall be included in the description column.

d. Identification of all HCI and ESDS components using the appropriate symbols (see 3.5.10 and 3.5.11).

3.6.1 Margin data. Margin data shall be in accordance with the requirements of MIL-STD-38784.

When the MPL is to be used in conjunction with MIL-DTL-83495 type manuals, the MPL shall display the applicable SSSN, in 18 point type, directly above the page number.

3.6.2 Nomenclature. When SSSNs are used, the equipment and nomenclature shall be followed by the applicable higher level designation in parentheses. Chapter/section titles and system, subsystem, or sub-subsystem nomenclature shall be followed by the applicable SSSN in parentheses.

3.6.3 Front matter. This chapter shall not contain front matter unless the IPB is a subdivided manual.

Paper output: If subdivided, each subdivision shall have a title page, list of effective pages, and table of contents.

3.6.4 Parts to be listed. Each item (e.g., detail, part, assembly, etc.), shall be listed as follows:

Downloaded from http://www.everyspec.com

a. An item covered by an approved standard, and used without alteration or selection, shall be identified by the standard part number (such as Military Standard (MS) number of the Military Specification Sheet).

b. An item covered by an approved government specification containing a part identification system, used without alteration, shall be identified by that specification part identification.

c. All other items shall be identified by a part number and CAGE code (see note 1 below).

d. Design activities using items other than their own design, without alteration or selection, shall identify such items by the original design activity part number and CAGE code.

e. Items which are altered, selected, or source controlled, shall be identified by a part number, established by the using design activity, and CAGE code.

f. Item(s) of supply part number(s) and CAGE code that is stocked, stored, and issued by the Government, as identified by the Government during the initial provisioning process. When items of supply have not been identified in time for publication in the initial issue, subsequent updates shall incorporate the identified items of supply received from the Government.

g. Only the preferred or master part shall be listed. IPBs shall not be updated, changed, or revised solely to reflect a new preferred or master part number (see notes 2 and 3 below).

NOTE

NOTE 1: A specification control drawing or vendor item drawing number (with any applicable dash numbers, if tabulated) is a part identification number used for control purposes only and shall not be listed, but shall be part of the description.

NOTE 2: When an original assembly or part does not have continued application (no spares of the original were procured or such spares are no longer authorized for replacement), only the preferred assembly or part is listed.

NOTE 3: When an assembly or part was installed during modification and the original part does not have continued application, only the preferred item is listed (see 3.6.7.6.1).

3.6.5 Parts not to be listed. The MPL shall omit:

a. Parts which lose their identities by being welded, sealed, or joined to other pieces as a permanent assembly.

b. Parts made of bulk stock, such as safety wire, bonding braid, upholstery cloth, friction tape, electrical wire, insulation, etc.

c. Structural items, such as stringers, stiffeners, skin, etc. (Applicable only to IPB manuals for aircraft and missiles).

d. Commonly used hardware, such as standard rivets, screws, bolts, nuts, cotter pins, washers, etc., when not used as attaching parts for frequently detached assemblies, subassemblies, or detailed parts.

e. Support equipment, such as tools and test equipment, other than that defined in 3.6c.

3.6.6 Illustrations. Illustrations shall be provided to identify listed parts. Illustrations shall be selected, prepared, and located in accordance with the requirements of MIL-STD-38784, and as specified herein. When necessary, an illustration shall show the relation of a component to the end item. When identical parts appear in the same relative location, only one needs to be illustrated. Exploded views shall be used to portray disassembly sequence clearly or to identify parts rapidly. Every effort shall be made to limit the number of parts shown on an illustration, so that no more than one page/graphics view is required.

If multisheet illustrations are required, they shall be in accordance with MIL-STD-38784. Foldout pages shall not be used.

Downloaded from http://www.everyspec.com

3.6.6.1 Main groups/major assemblies. Unless otherwise specified by the acquiring activity (see 6.2m), when the MPL is divided into main groups or major assemblies of the end item, the first illustration shall portray this information with a key to the main groups or major assemblies (see figures 2 and 3).

3.6.6.2 Functional systems. A functional system (air conditioning, communications, flight controls, fuel, hydraulic power, landing gear, etc.) shall be illustrated to permit the individual assemblies of the system to be readily located in the MPL by the use of keys (see figure 4).

3.6.6.3 Exploded view. Figure 5 provides a typical exploded view for equipment.

3.6.6.4 Similar assemblies and parts. When assemblies and parts have the same appearance and functional purpose, they need to be illustrated only once, provided the criteria of 3.6.9.7 are met.

3.6.6.5 Differing components, assemblies, and parts. Components, assemblies, and parts which differ from an earlier or later configuration, yet have a similar appearance, need to be illustrated only once, providing the changed and added parts are clearly identified. When space does not permit this arrangement, or major differences exist, separate illustrations shall be provided.

3.6.6.6 Subassemblies. When space permits, all the detail parts of each subassembly contained in any one assembly shall be shown on one illustration. When space limitations prohibit this requirement, a subassembly shall be illustrated completely assembled on the assembly illustration, and a separate exploded view of the subassembly prepared. In both descriptions of the subassembly (where listed assembled and where listed with detail parts), there shall be a cross-reference to the other illustration.

3.6.6.7 Attaching parts. Illustrations of attaching parts shall only be exploded when disassembly/assembly procedures merit explosion because of complexity. When the attaching parts at a specific location are not visible in an illustration (a top view may show the bolts and washers above, but not the washers and nuts beneath), an index number shall be assigned to each item, and all index numbers shall be shown with one leader line terminating on the visible part(s).

3.6.6.8 Indicating relationship. When unlisted parts are illustrated to show relationship, the unlisted parts shall be toned down, or shown in phantom, to give emphasis to listed parts.

3.6.6.9 Index numbers. Each illustration shall have index numbers beginning with 1. Any suitable method which will effectively identify a part may be employed, such as use of leader lines, index number directly on a part, etc. Index numbers must agree with those shown in the listings (see 3.6.7.1, 3.6.7.1.1 and 3.6.7.1.2). When disassembly/assembly procedures do not merit explosion because of simplicity (for example, the insulating pad or socket for a microcircuit), an index number shall be assigned to each item, and all index numbers shall be shown with one leader line terminating on the visible part(s) (see figure 6). When specified by the acquiring activity (see 6.2n), reference designators shall follow or be placed immediately below the applicable index number, in parentheses, on the illustration.

3.6.6.10 Figure titles and numbering. The requirements of MIL-STD-38784 are applicable except the chapter number shall not precede the figure number, unless the IPB is a chapter of a maintenance manual.

3.6.6.11 Added and deleted figures and index numbers. The requirements of MIL-STD-38784 apply.

3.6.6.12 Circuit Card Assemblies (CCA). CCAs and their components shall be illustrated and broken down in accordance with SMR code assignments (maintenance concept), as established by the acquiring activity. If the CCA is of such a nature that it cannot be adequately illustrated by a single indexed view, it shall be indexed by sections as separate views. In such cases, a view showing the complete CCA, and identifying each section, shall be shown. Each section shall then be indexed (see figure 6). Exploded views shall be used when necessary to clearly portray all indexed components of the CCA.

3.6.7 Format. The MPL shall be arranged as a table in the format indicated below, (see figures 2, 3, 4, 6, and 7) and shall not be right justified. The parts listing shall be considered part of the associated figure, and shall not be separately labeled. (e.g., an illustration of the filter assembly and its associated parts list would form “Figure X. Filter Assembly”) The width of the columns (description column excepted) shall be adjusted to accommodate the information to be inserted in each; the remaining space shall form the description column. Parts shall be listed to show parts relationship and in the sequence of disassembly, except where that sequence cannot be maintained.

Downloaded from http://www.everyspec.com

FIGURE & INDEX/ SHEET NO.	PART NUMBER	CAGE	DESCRIPTION 1234567	UNITS PER ASSY	USABLE ON CODE	SMR CODE

When specified by the acquiring activity (see 6.2o), if the end item consists of main groups and/or systems, the title of each main group or system shall be shown beneath the publication number on each applicable page.

3.6.7.1 Figure & Index/Sheet No. Column. This column shall list applicable figure, index, and sheet numbers (see 3.6.7.1.3). The figure and index numbers shall be separated by two spaces. The index and sheet numbers shall be separated by a slash (/). Figure 12, index 1, on sheet two of the illustration would be listed as "12 1/2". Authors shall ensure that the index numbers in the parts list are in sequence. When the same part appears more than once on an illustration, and is part of different assemblies or subassemblies, or it is otherwise necessary to list it more than once, each listing shall be assigned a different index number. An index number shall not be assigned to an assembly when the detail parts are indexed unless the assembly is shown completely assembled on the same illustration, or a bracket or circle shows which parts comprise the assembly. When a change to an end item requires addition of parts to a listing and illustration, the requirements of MIL-STD-38784 apply for suffixed index numbers.

The figure number shall precede the first index number in each listing and the first index number on each page of a multi page listing, but shall not be repeated before each subsequent index number.

3.6.7.1.1 Index numbers for CCAs. Because of the many like items, when the same part appears more than once in an illustration, the same index number shall be assigned to all identical parts.

3.6.7.1.2 Index numbers for attaching parts. When a group of parts (bolt, washer, nut) is used at a specific location for attachment purposes, each part shall be assigned a separate index number (see 3.6.6.7).

3.6.7.1.3 Sheet numbers. Sheet numbers shall be used only with multisheet illustrations. When an indexed item appears on more than one sheet of the illustration, the first and last sheet number on which the item appears shall be listed.

3.6.7.1.4 Parts which are not illustrated. Parts which are indexed in the listing, but are not shown on the illustration (e.g., attaching parts or a microcircuit socket which are not exploded) (see 3.6.6.7 and 3.6.6.9) shall have a dash (-) preceding the index number (e.g., -47). Chapter 1 shall include an explanation that the symbol denotes a part which is not illustrated (see 3.5.6).

3.6.7.2 Part Number column. This column shall contain part numbers, including dash numbers, assigned to each listed part in accordance with current industry engineering practices. Only the preferred or master part shall be listed (see 3.6.4g). As applicable, part numbers for prime contractor, subcontractor, vendor, commercial parts, and standard (government, contractor, and industry) parts shall all be listed. When the part number and drawing number differ (excluding dash numbers), refer to 3.6.7.4d. When a component is identified only by a model or type number, such a number shall be used in lieu of a part number. Numerical footnotes will be allowed in the part number column with explanations located at the end of the MPL.

3.6.7.3 CAGE column. The appropriate CAGE code can be found at https://cage.dla.mil, and shall be listed in this column directly opposite each part, model, or type number listed in the part number column. The CAGE code shall identify the design activity or government agency whose number appears in the part number column.

3.6.7.3.1 CAGE code not listed. When a CAGE code for the appropriate design activity or government agency is not published at https://cage.dla.mil, the word "none" shall be inserted in the CAGE column directly opposite the part, model, or type number listed in the part number column (see 3.6.7.4h).

3.6.7.4 Description column. This column shall contain the description of each part listed. The nomenclature appearing in the title block of the drawing, to which the detail part was manufactured, shall be used. Incomplete nomenclature (e.g., noun only) of detail parts, appearing in the body of an assembly or installation drawing, shall not be used (government standard parts excepted). When necessary, the size,

Downloaded from http://www.everyspec.com

dimensions, material, and tolerances for a part shall be indicated to make the description complete. The description shall be arranged to show the following:

a. The identifying noun shall be the first word. When the part is identified as a HCI or ESDS, the HCI and ESDS markings, as appropriate, shall precede the first word (see 3.5.10, 3.5.11, and the example following 3.6.7.4.1). When the listing is an assembly or installation, the word "assembly" or "installation" shall follow the noun. A comma shall separate these words from the rest of the description (see 3.6.7.4).

b. The item name (including the word "assembly" or "installation") shall be in upper-case. The first letter of the first word following the item name shall be in upper-case; remaining words shall be in lower-case. The first letter of proper nouns, regardless of location, shall always be in upper-case.

c. When units of measurement are the same, they shall not be repeated with each dimension; example: 1/8 by 3/4-inches (not 1/8-inch by 3/4-inch). To avoid confusion, a dash shall be used between a whole number and a fraction; example: 1-1/16, 2-3/4, 4-9/64. Dashes may be omitted if fraction characters (e.g., ½, ¼) are used. When a decimal with a value of less than 1.0 is given, a zero shall precede the decimal point; example: 0.002-inch.

d. The appropriate numbers for the type, model, specification, specification control drawing, and the source control drawing shall follow the nomenclature. When the drawing number for a part is different than the part number (excluding dash number differences), the drawing number shall follow the description (see 3.6.7.2). When a part is authorized for local manufacture, and a specific drawing is required for such accomplishment, the drawing number shall follow the description.

e. The requirements of MIL-STD-38784 apply to the use of abbreviations.

f. Leader points (a series of periods) shall be used to join the description and the next column to the right. When the description requires more than one line, leader points shall be used on the first line only. Leader point spacing shall be at least double-spaced.

g. Reference to another illustration for information on the detail parts of an assembly and reference to another illustration for information on the next higher assembly shall be made.

h. When the word "none" is listed in the CAGE code column in accordance with 3.6.7.3.1, the complete name and address of the design activity or government agency, whose part, model, or type number appears in the part number column, shall be shown in parentheses at the end of the description. When several CAGE codes are not available, or the design activity's name and address must be repeated several times, numerically identified footnotes may be used in the CAGE column and identified at the end of the MPL and in chapter 1.

Downloaded from http://www.everyspec.com

3.6.7.4.1 Indentation. The description for parts listed shall be indented to indicate relationship. The indentation shall be indicated by leader points, each point shall signify each indentation. When the description exceeds one line, the second (and succeeding lines) shall be indented two additional indentations from the first line. Example:

Description
1 2 3 4 5 6 7
END ITEM, COMPONENT, MAJOR ASSEMBLY
. HCI DETAIL PARTS FOR END ITEM, COMPONENT, MAJOR ASSEMBLY
. ASSEMBLY
. Attaching parts for assembly (AP)
. . **ESDS** Detail parts for assembly
. . Subassemblies
. . Attaching parts for subassemblies (AP)
. . . Detail parts for subassemblies
. . . Sub-subassemblies
. . . Attaching parts for sub-subassemblies (AP)
. . . . Detail parts for sub-subassemblies

3.6.7.5 Units per assembly column. The column shall show the following:

a. Quantity required for each detail part in an assembly.

b. Quantity required for each assembly in the next higher assembly.

c. Quantity required for each attaching part to attach one unit or one assembly.

d. The abbreviation “AR” for oversize and undersize parts and “as required” for parts when quantities are indefinite.

e. The abbreviation “REF” where items are listed for reference purposes. Such items shall show a quantity where the item is listed assembled, or listed in detail, and show “REF” in other listings.

f. The quantity shall be listed opposite the first line of the description when the description requires more than one line.

3.6.7.6 Usable on code column. This column shall contain codes to indicate the configurations (type, model, series, blocks, etc.) of the end items to which listed assemblies and parts apply. When a part applies to all configurations, no code is required in this column; likewise, when the manual covers only one configuration, no coding system is required. The coding system shall consist of capital letters of the alphabet beginning with single letters, A through Z, and when necessary, continue with double letters, AA through AZ, BA, through BZ, etc.

3.6.7.6.1 Usable on code. The meaning of usable on codes, if used, shall appear at the end of each MPL (for each figure) in the description column (see figure 7). Example:

CODE	USABLE ON
A	Aircraft Number/Serial Number through Aircraft Number/Serial Number
B	Aircraft Number/Serial Number through Aircraft Number/Serial Number before TCTO XX-XX-XXX
C	Aircraft Number/Serial Number through Aircraft Number/Serial Number after TCTO XX-XX-XXX

The MPL shall not list Time Compliance Technical Orders (TCTOs) that have been completed.

Downloaded from http://www.everyspec.com

3.6.7.7 SMR code column. This column shall contain the Joint Military Services Uniform SMR codes assigned by the government and furnished by the acquiring activity. The definitions of these codes are available in TO 00-25-195. When codes are not available for publication in the initial issue, scheduled changes or revisions, as applicable, shall incorporate SMR codes approved by the government during the initial provisioning process.

3.6.7.7.1 Multiple Service TMs. When specified by the acquiring activity (see 6.2p), multiple SMR columns shall be displayed as required. The columns shall appear in the order listed below, as required. The headings for the SMR code columns shall also contain the appropriate service designation(s): (ARMY), (NAVY), (USAF), (USMC), (USCG). Each service shall identify the appropriate SMR code entry in their designated column. When services share the same SMR code for an item, the SMR code shall be listed for each service. When supported by the viewing system, only the SMR codes applicable to the user may be displayed.

3.6.8 Layout.

Paper output: Whenever the size of an illustration and the length of its corresponding parts list warrant, the MPL shall be laid out so that a full-page illustration is on the left-hand page and the applicable parts list is on the right-hand facing page. Whenever a smaller illustration and parts list length permits, the illustration and parts list shall be placed on the same page; the illustration may be placed above or below the parts list.

3.6.9 Subjects requiring special attention.

3.6.9.1 Standard items and standard part. Government standard items and parts shall be identified by the assigned government standard part number and CAGE code. Part numbers, design activity codes, and complete descriptions are required for industry and contractor standard items and parts. When an item is part of an assembly and covered in the intermediate level IPB, it must be shown in the aircraft IPB if it is SMR coded for organizational level maintenance.

3.6.9.2 Government Furnished Equipment (GFE) and Contractor Furnished Equipment (CFE) covered by separate manuals. The item and attaching parts shall be listed for both GFE and CFE. Other detail parts shall not be listed. Following the part number of the GFE/CFE item, a number sign (#) shall be inserted flush right to indicate that detail parts are listed in a separate manual. Chapter 1 shall include an explanation that the number sign (see 3.5.6) signifies that detail parts are listed in a separate manual and the publication number is in the list of related technical manuals.

3.6.9.3 Vendor Parts (including commercial hardware). When vendor items are used exactly as manufactured, and are not selected or source controlled, vendor part numbers shall be listed. When a separate IPB is available for a vendor item, the requirements of 3.6.9.2 are applicable.

3.6.9.4 Altered, selected, or source controlled items. When a government standard, industry standard, vendor, or commercial item is altered, selected, or source controlled, the part number from the design activity responsible for the alteration, selection, or source control shall be listed in the part number column.

3.6.9.5 Oversize and undersize parts. The description of oversize and undersize parts shall include dimensions.

3.6.9.6 Matched parts. When parts are manufactured as a matching set (lapped assembly, electronic, etc.) to meet certain requirements, the description of the part shall be coded or annotated that the parts must be requisitioned as a set.

3.6.9.7 Similar assemblies. When similar assemblies contain 51 percent or more identical parts, the assemblies shall be combined and listed as follows; otherwise the assemblies shall be listed separately.

a. All the assemblies (figure and index numbers, part numbers, description, quantities, codes) shall be listed first, followed by the detail parts.

b. A part common to all assemblies in the same quantity shall be listed once and the quantity per assembly designated.

c. A part common to all assemblies in differing quantities shall be listed once for each quantity and be identified to which assembly each listing pertains by use of a usable on code.

d. Peculiar parts shall be listed once and be identified to which assembly each pertains by use of a usable on code.

Downloaded from http://www.everyspec.com

3.6.9.8 Attaching parts. Attaching parts shall be identified by the abbreviation (AP) following the description of the part. Example:

Plate
Screw (AP)
Washer (AP)
Connector

3.6.9.9 Marking. Decals, vinyl film markings, etc., shall be considered as parts. The identifying drawing number for each marking shall appear in the part number column. The part number for each marking shall be followed (flush right) by an asterisk (*) symbol. Chapter 1 shall explain that such a symbol means, "requisition this marking in accordance with the requirements of DoDI 5330.03" (see 3.5.6). The nomenclature or title of each marking shall appear in the description column. The location of each marking shall be illustrated, but a separate readable illustration is not necessary.

3.6.10 Parts in kits, change units, power packages.

3.6.10.1 Repair parts kits. When replaceable parts of an assembly are available in the form of kits, the words "(Repair kit available)" shall follow the description of the applicable assembly. The detail parts of the assembly that are contained in the kit shall be assigned kit source codes and these codes shall appear in this column. The kit listing shall follow the last detail part of the applicable assembly and be listed at the same indentation as the assembly. Illustrations of kits are not required.

3.6.10.2 Quick Change Units (QCU). When an item is supported by a QCU, the words "(QCU available)" shall follow the description of the applicable item. The detail parts of the item that are contained in the QCU shall be identified with the words "QCU detail" following the description of each detail part. The QCU listing shall follow the last detail part of the applicable item and be listed at the same indentation as the item. Following the listing of the QCU, a quick change kit, if applicable, shall be listed. Illustrations of QCUs are not required.

3.6.10.3 Power package. When specified by the acquiring activity (see 6.2q), a separate power package buildup manual (including IPB) is to be prepared. The end item IPB shall contain an illustration and listing of the assembled power package and illustrations and listings of attaching parts for the power package. Detail parts of the power package shall not be listed. Following the part number of the power package, a number sign (#) shall be inserted flush right to indicate that detail parts are listed in a separate manual. Chapter 1 shall include an explanation that the number sign (see 3.5.6) signifies that detail parts are listed in a separate manual and the publication number is in the list of related publications.

3.7 Chapter 3, Numerical Index. This chapter shall contain the part numbers of all parts listed in the MPL, including model and type numbers for components not assigned part numbers. A numerical index is not required when the MPL contains less than 200 different part numbers.

3.7.1 Front matter.

a. Single manuals. This chapter shall not contain front matter.

b. Subdivided manuals. This chapter shall have a title page and list of effective pages.

c. Subdivided manuals with chapters 1, 2, and 3 combined. This chapter shall not contain front matter.

3.7.2 Format. The numerical index shall be arranged in the following format. Unless otherwise specified by the acquiring activity (see 6.2r), a space shall be skipped beneath each tenth listing. The width of the columns shall be adjusted to accommodate the information to be inserted in each. A triple division of the format shall be used when this will not cause a cluttered or difficult to read index, in which case a double division shall be used.

PART NUMBER	FIGURE & INDEX	PART NUMBER	FIGURE & INDEX	PART NUMBER	FIGURE & INDEX

3.7.2.1 Part Number columns. Part number arrangement shall begin at the extreme left and continue from left to right, one position at a time. For the first character of the part number, the letters

Downloaded from http://www.everyspec.com

A through N and P through Z take precedence over the numerals, 0 through 9. (Alphabetic Os are considered numeric zeros). For the second and succeeding characters of a part number, precedence is as follows: (1) diagonal, (2) period, (3) dash, (4) letters A through N and P through Z, (5) numerals 0 through 9. The following is a sample arrangement:

AN931-4-13	B2	16.W2
A2460	S/1	16W060
A317	1140	32P010-1
A32	121873	32P0101
B12	128	39A46

3.7.2.2 Figure and Index Number column. This column shall contain the figure and index number(s) for all parts listed, as applicable. When an assembly or part has not been assigned an index number, the figure and index number of the preceding part in the MPL shall be used with the letter "F" before the figure number, such as F7-6. Chapter 1 shall include an explanation that the letter "F" means "follows" (see 3.5.6). For subdivided manuals, the applicable manual number shall be added to the figure and index number column.

3.8 Chapter 4, Reference Designator Index. This index is required only when reference designators have been established for any parts listed in the MPL. When the MPL contains less than 200 different part numbers, a reference designator index is not required, provided the applicable reference designators have been inserted on the illustrations. When specified by the acquiring activity (see 6.2s), the SSSN shall be used in conjunction with, or in lieu of, the reference designator. The SSSN is assigned in accordance with MIL-STD-1808.

3.8.1 Front matter.

a. Single manuals. This chapter shall not contain front matter.

b. Subdivided manuals. This chapter shall have a Title Page and List of Effective Pages.

c. Subdivided manuals with chapters 1, 2, and 3 combined. This chapter shall not contain front matter.

3.8.2 Format. The Reference Designator Index shall be arranged as follows:

a. A space shall be skipped beneath each tenth listing.

b. The width of the columns shall be adjusted to accommodate the information to be inserted in each.

c. Format shall be three double-columns, as shown below.

Reference Designator	Figure & Index No.	Reference Designator	Figure & Index No.	Reference Designator	Figure & Index No.

3.8.2.1 Reference Designator column. This column shall contain all applicable reference designators shown on schematic and wiring diagrams, and those cited in applicable operation and maintenance manuals. They shall be arranged in alphanumeric sequence. When the block or unit system of designations is employed, identical items having reference designators which are consecutive and are at the same location may be grouped. When use of SSSN has been specified (see 3.8), this column shall be headed as "SSSN" with the SSSNs following in numeric order.

3.8.2.2 Figure and index number column. This column shall contain the figure and index number(s) applicable to all reference designations listed. When an assembly or part has a reference designator, but not an index number, the figure and index number of the preceding part in the MPL shall be used with the letter "F" before the figure number, such as F7-6. Chapter 1 shall include an explanation that the letter "F" means "follows" (see 3.5.6). For subdivided manuals, the applicable manual number shall be added to the figure and index number column. For work package type manuals, the work package number shall be included with the figure and index number.

3.9 Changes and revisions. DELETED.

Downloaded from http://www.everyspec.com

4 VERIFICATION

4.1 Verification requirements. When the technical data produced according to this specification is offered for acceptance, all tests, reviews, and verifications specified by the acquiring activity to determine that it conforms to the requirements in Section 3 of the specification, shall be accomplished as specified (see 6.2t and 6.7).

4.2 Compliance. Technical Manuals (TMs) shall meet all requirements of Section 3 of this specification and the applicable Digital Support Suite (DSS) appendix, as specified by the acquiring activity (see 6.2). The requirements set forth in this specification shall become a part of the contractor's overall inspection system or quality program. The absence of any requirements in this specification shall not relieve the contractor of the responsibility of ensuring that all products or supplies submitted to the government for acceptance comply with all requirements of the contract. Use of sampling inspections shall be at the discretion of the contractor, and in accordance with commercially acceptable quality assurance procedures. However, use of sampling in QA procedures does not authorize submission of known defective material, either indicated or actual, nor does it commit the government to accept defective material.

5 PACKAGING

5.1 Packaging. For acquisition purposes, the packaging requirements shall be as specified in the contract or order (see 6.2u). When packaging of materiel is to be performed by DoD or in-house contractor personnel, these personnel need to contact the responsible packaging activity to ascertain packaging requirements. Packaging requirements are maintained by the Inventory Control Point's packaging activities within the Military Service or Defense Agency, or within the military service's system commands. Packaging data retrieval is available from the managing Military Department's or Defense Agency's automated packaging files, CD-ROM products, or by contacting the responsible packaging activity.

6 NOTES

(This section contains information of a general or explanatory nature that may be helpful, but is not mandatory.)

6.1 Intended use. Technical manuals prepared in accordance with the requirements of this specification are intended for use in the identification and requisitioning of parts and for illustrating assembly and disassembly relationships.

6.2 Acquisition requirements. Acquisition documents must specify the following:

a. Title, number, and date of this document.

b. If TMs are to be prepared in single or subdivided format, or as a chapter of a maintenance/operation or overhaul manual (see 1.1).

c. DELETED.

d. DELETED.

e. Which of either the PDF or paper output unique requirements herein apply, i.e., "all paper output requirements apply for IPBs..."; identify any exceptions by specific paragraph number (see 3.1).

f. If the IPB is to be developed as a combined manual (see 3.2.1).

g. If the IPB is to be developed as a series of subdivided manuals (see 3.2.2).

h. If serialization tables are to be provided whenever two or more configurations of the equipment covered by the IPB exist and not all subcomponents are interchangeable between configurations (see 3.5.2).

i. If all HCIs are to be marked with the HCI symbol, and if **HCI** may be used in lieu of the HCI symbol (see 3.5.10).

j. If changes or substitutions of HCI are required (see 3.5.10.1).

k. If all ESDS parts are to be marked with the ESDS symbol, and if **ESDS** may be used in lieu of the ESDS symbol (see 3.5.11).

Downloaded from http://www.everyspec.com

l. If a manufacturers list is to be provided (see 3.5.13).

m. If the top level illustration is required to portray the main group/major assemblies when the IPB is broken up as such (see 3.6.6.1).

n. If reference designations are to follow or be placed immediately below the applicable index number on the illustrations (see 3.6.6.9).

o. If MPL pages are to show group or system titles beneath the publication number (see 3.6.7).

p. If multiple SMR columns will be displayed (see 3.6.7.7.1).

q. If a separate power package buildup manual is being procured (see 3.6.10.3).

r. If spacing between listings is to be other than that specified in this specification (see 3.7.2).

s. If SSSN is to be used in chapter 4 and, if used, whether it is to be in conjunction with or in lieu of the reference designator (see 3.8).

t. The requirements for tests, reviews, and verifications specified for manuals developed under this specification (see 4.1).

u. Packaging requirements (see 5.1).

6.3 Technical manuals. The requirement for technical manuals should be considered when this specification is applied on a contract. If technical manuals are required, specifications and standards that have been authorized and assigned an Acquisition Management Systems Control (AMSC) number must be listed on a separate Contract Data Requirements List (DD Form 1423), which is included as an exhibit to the contract. The technical manuals must be acquired under separate contract line item in the contract.

6.4 Acronyms. The acronyms used in this document are defined as follows:

AF TOPP	The Air Force Technical Order Policy and Procedures
AMSC	Acquisition Management Systems Control
CAGE	Commercial and Government Entity
CCA	Circuit Card Assembly
CFE	Contractor Furnished Equipment
DoD	Department of Defense
ASSIST	Acquisition Streamlining and Standardization Information System
DTD	Document Type Definition
ESDS	Electrostatic Discharge Sensitive
GFE	Government Furnished Equipment
HCI	Hardness Critical Item
IPB	Illustrated Parts Breakdown
I&S	Interchangeability and Substitution
MPL	Maintenance Parts List
PDF	Portable Document Format
QA	Quality Assurance
QCU	Quick Change Units
SMR	Source, Maintenance, and Recoverability
SSSN	System Subsystem Sub-subsystem Number
TCTO	Time Compliance Technical Order
TM	Technical Manual
WP	Work Package

6.5 Definitions. For the purposes of this document, the following definitions apply.

6.5.1 Interchangeable Item. An item which possesses such functional and physical characteristics as to be equivalent in performance, reliability, and maintainability, to another item of similar or identical purposes,

Downloaded from http://www.everyspec.com

and is capable of being exchanged for the other item without selection for fit or performance and without alteration of the items themselves or adjoining items, except for adjustment (reference DoDM 4100.39).

6.5.2 Paper output. Specifies requirements used to develop TM data to be used as printed or paper publications. These are requirements that only apply due to the medium of the publication being paper, such as the need for volumes, binding edges, various page sizes, blank aprons for foldouts, etc.

6.5.3 PDF output. Specifies requirements used to develop TM data to be used as PDF publications. These are requirements that only apply due to the PDF medium, such as hyperlinks and bookmarks.

6.5.4 Substitute Item. An item which possesses such functional and physical characteristics as to be capable of being exchanged for another only under specified conditions or for particular applications and without alteration of the items themselves or of adjoining items. This term is synonymous with the phrase "one way interchangeability", such as item B can be interchanged in all applications for item A, but item A cannot be used in all applications requiring item B (reference DoDM 4100.39).

6.6 Subject term (key word) listing.

Commercial and Government Entity code
Maintenance Parts List
Reference Designator
Source, Maintenance and Recoverability code
Units Per Assembly
Usable On Code

6.7 TM verification requirements. The Air Force Technical Order Policy and Procedures (AF TOPP) team, AFMC/A4FI, provides the specific requirements for verification of technical data developed and delivered through this specification, as well as guidance for including these requirements in the solicitation or contract (see TO 00-5-3, AF Technical Order Life Cycle Management).

6.8 Amendment notations. The margins of this specification are marked with vertical lines to indicate modifications generated by this amendment. This was done as a convenience only and the Government assumes no liability whatsoever for any inaccuracies in these notations. Bidders and contractors are cautioned to evaluate the requirements of this document based on the entire content irrespective of the marginal notations.

Downloaded from http://www.everyspec.com

HOW TO USE THE ILLUSTRATED PARTS BREAKDOWN

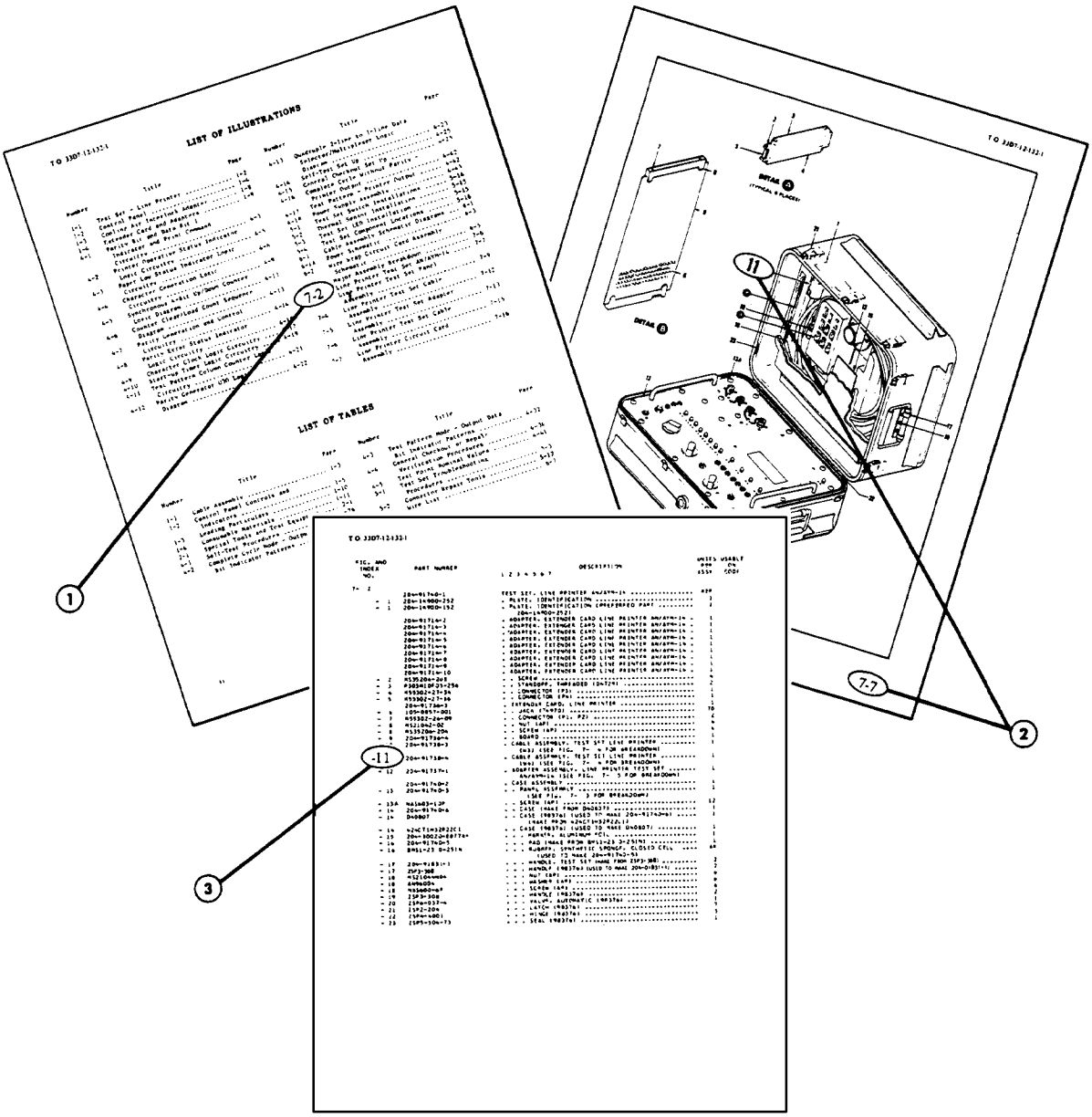

WHEN THE PART NUMBER IS NOT KNOWN

1. Determine the function and application of the part required. Turn to the List of Illustrations and select the most appropriate title. Note the illustration page number.

2. Turn to the page indicated and locate the desired part on the illustration.

3. From the illustration, obtain the index number assigned to the part desired. Refer to the accompanying description for specific information regarding the part.

G0100658

FIGURE 1. Example how to use the illustrated parts breakdown.

Downloaded from http://www.everyspec.com

HOW TO USE THE ILLUSTRATED PARTS BREAKDOWN

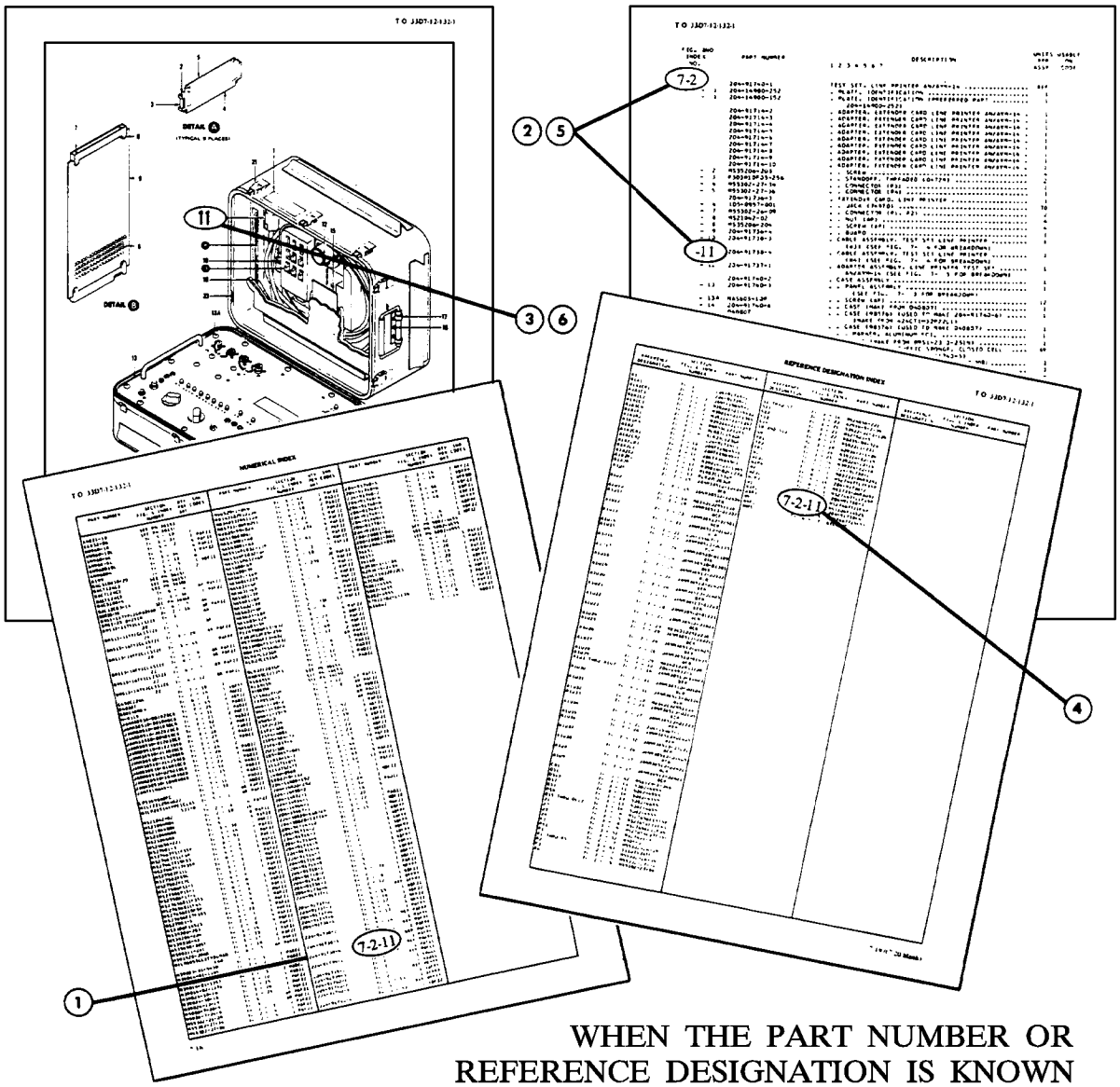

WHEN THE PART NUMBER OR REFERENCE DESIGNATION IS KNOWN

1. When the part number is known, locate the part number in the Numerical Index. Note the figure and index number assigned to the part number.

2. Turn to the figure number indicated; locate the index number referenced in the Numerical Index.

3. If a pictorial representation or location of the part is desired, refer to the same index number on the accompanying illustration.

4. When the referenced designation is known, locate the reference designation number in the Reference Designation Index. Note the figure and index number, and the part number assigned.

5. Turn to the figure indicated; locate the index number referenced in Reference Designation Index.

6. If a pictorial representation or location of the part is desired, refer to the same index number on the accompanying illustration.

G0100659

FIGURE 1. Example how to use the illustrated parts breakdown - Continued.

Downloaded from http://www.everyspec.com

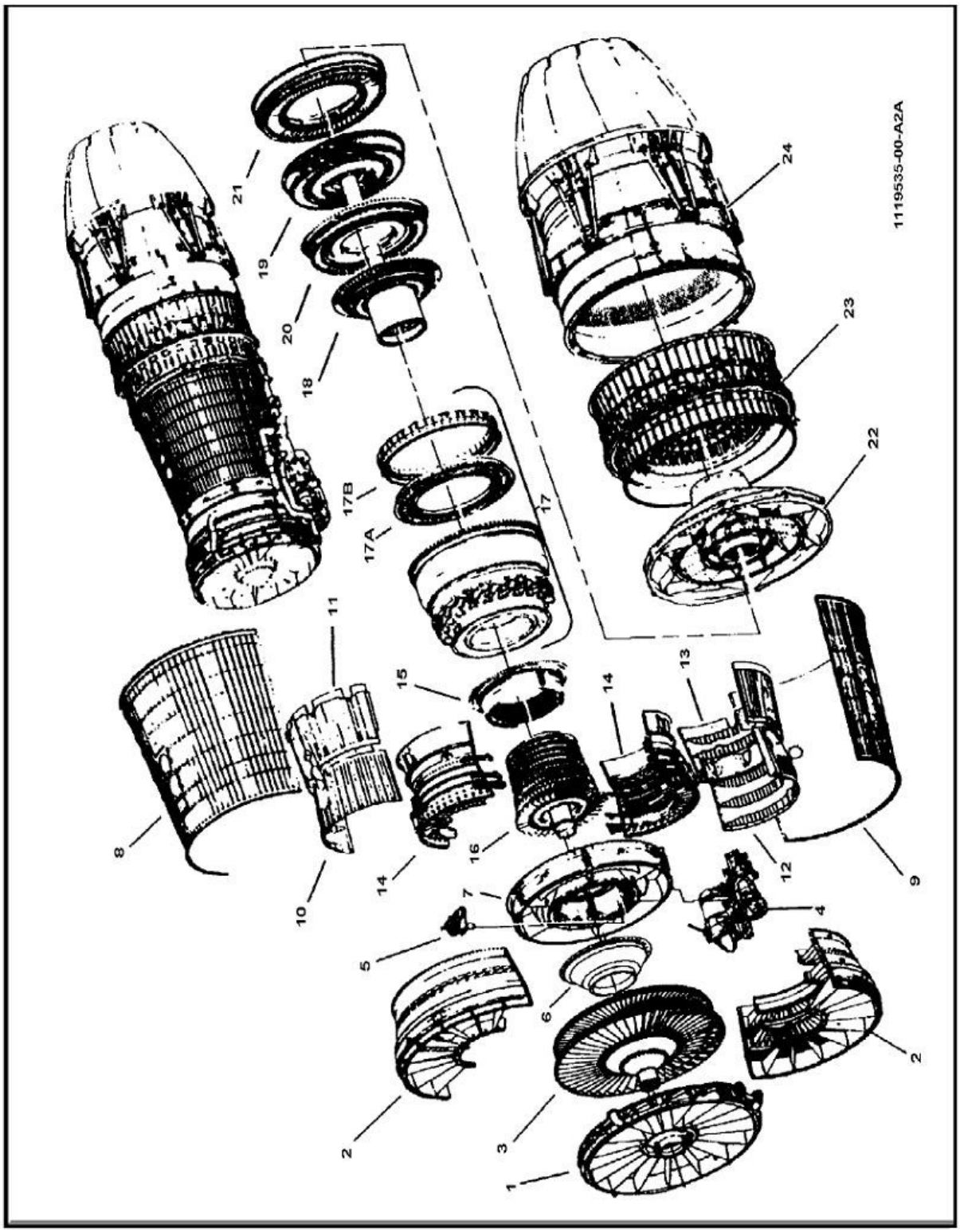

(EXAMPLE NOT TO SCALE)

FIGURE 2. Typical main groups listing.

Downloaded from http://www.everyspec.com

FIGURE & INDEX / SHEET NO.	PART NUMBER	CAGE	DESCRIPTION 1 2 3 4 5 6 7	UNITS PER ASSY	USEABLE ON CODE	SMR CODE
			LOCATOR FOR MAJOR ENGINE ASSEMBLIES			
1 -	9550M10G01	07482	ENGINE ASSY	1		
- 1	9550M13G03	07482	. FRAME ASSY, Front (see figure 2 thru 5)	1		AFF
- 2	9550M11G01	07482	. STATOR ASSY, Fan (replaceed by ..... 9550M11G02 per TO 2J-F101-517 (see Figure 6 thru 11)	1		AFF
	9550M11G02	07482	. STATOR ASSY Fan (replaceed by ..... 9550M11G02 PER TO 2J-F101-517 (see Figure 6 thru 11)	1		AFF
	9550M11G02	07482	. STATOR ASSY, Fan (replaceed by ..... 9550M11G03 PER B035 (rework and reidentify to 9550M11G06 per ECP B078 (see Figure 6 thru 11)	1		AFF
	9550M11G03	07482	. STATOR ASSY, Fan (replaceed by ..... 9550M11G05 PER B050 (rework and reidentify to 9550M11G05 PER ECP B050 (see Figure 6 thru 11)	1		AFF
	9550M11G05	07482	. STATOR ASSY, Fan (replaceed by ..... 9550M11G06 PER B078 (rework and reidentify from 9550M11G03 PER ECP B050/SEE (see Figure 6 thru 11)	1		AFF
	9550M11G06	07482	. STATOR ASSY, Fan reworked and ..... reidentified from 9550M11G02 per B078 (see Figure 6 thru 11)	1		AFF
- 3	9550M28G07	07482	. ROTOR ASSY, Fan (replaceed by ..... 9550,28G11 per ECP B140 (rework and reidentify to 9550M8G11 PER ECP B140) see Figure 12	1		PAFDD
	9550M28G08	07482	. ROTOR ASSY, Fan (replaceed by ..... 9550,28G12 per ECP B140) (rework and reidentifv to 9550M8G1: per ECP B140) see Figure 12 see Figure 14 for breakdown	1		PAFDD
	9550M28G09	07482	. ROTOR ASSY, Fan (replaceed by ..... 9550,28G13 PER ECP B140 (rework and reidentify to 9550M8G13 per ECP B140) see Figure 12 (see Figure 14 for breakdown)	1		PAFDD
	9550M28G10	07482	. ROTOR ASSY, Fan (replaceed by ..... 9550,28G14 PER ECP B140 (rework and reidentify to 9550M8G14 PER ECP B140) see Figure 12 (see Figure 14 for breakdown)	1		PAFDD
	9550M28G11	07482	. ROTOR ASSY, Fan reworked and ..... reidentified from 9550M28G07 per ECP B140) see Figure 12 (see Figure 14 for breakdown)	1		PAFDD
	9550M28G12	07482	. ROTOR ASSY, Fan reworked and ..... reidentified from 9550M28G08 per ECP B140) see Figure 12 (see Figure 14 for breakdown)	1		PAFDD

(EXAMPLE NOT TO SCALE)

FIGURE 2. Typical main groups listing - Continued.

Downloaded from http://www.everyspec.com

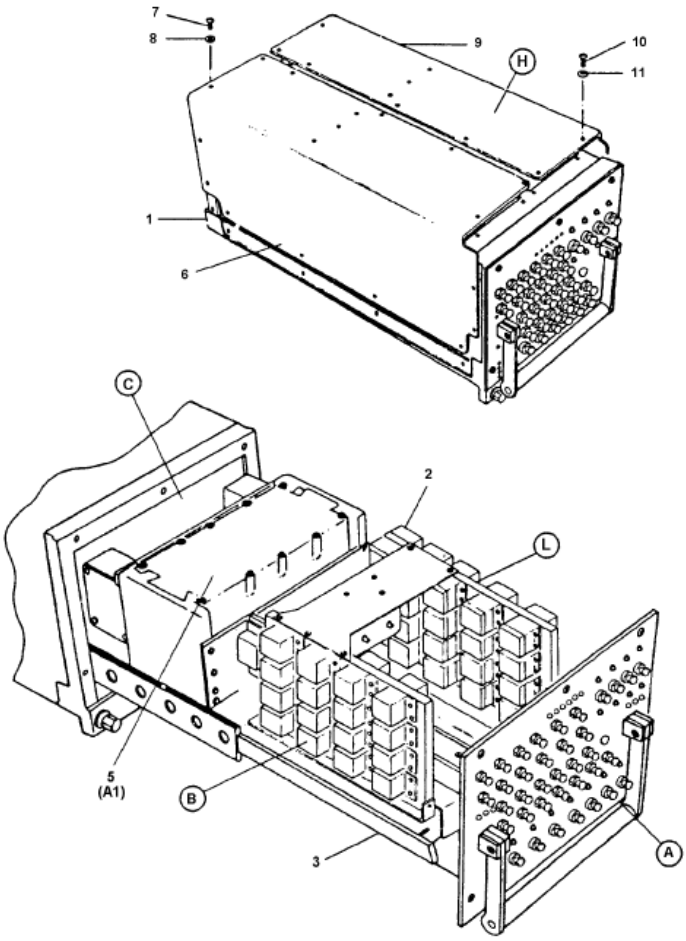

(EXAMPLE NOT TO SCALE)

FIGURE 3. Typical main assemblies listing.

Downloaded from http://www.everyspec.com

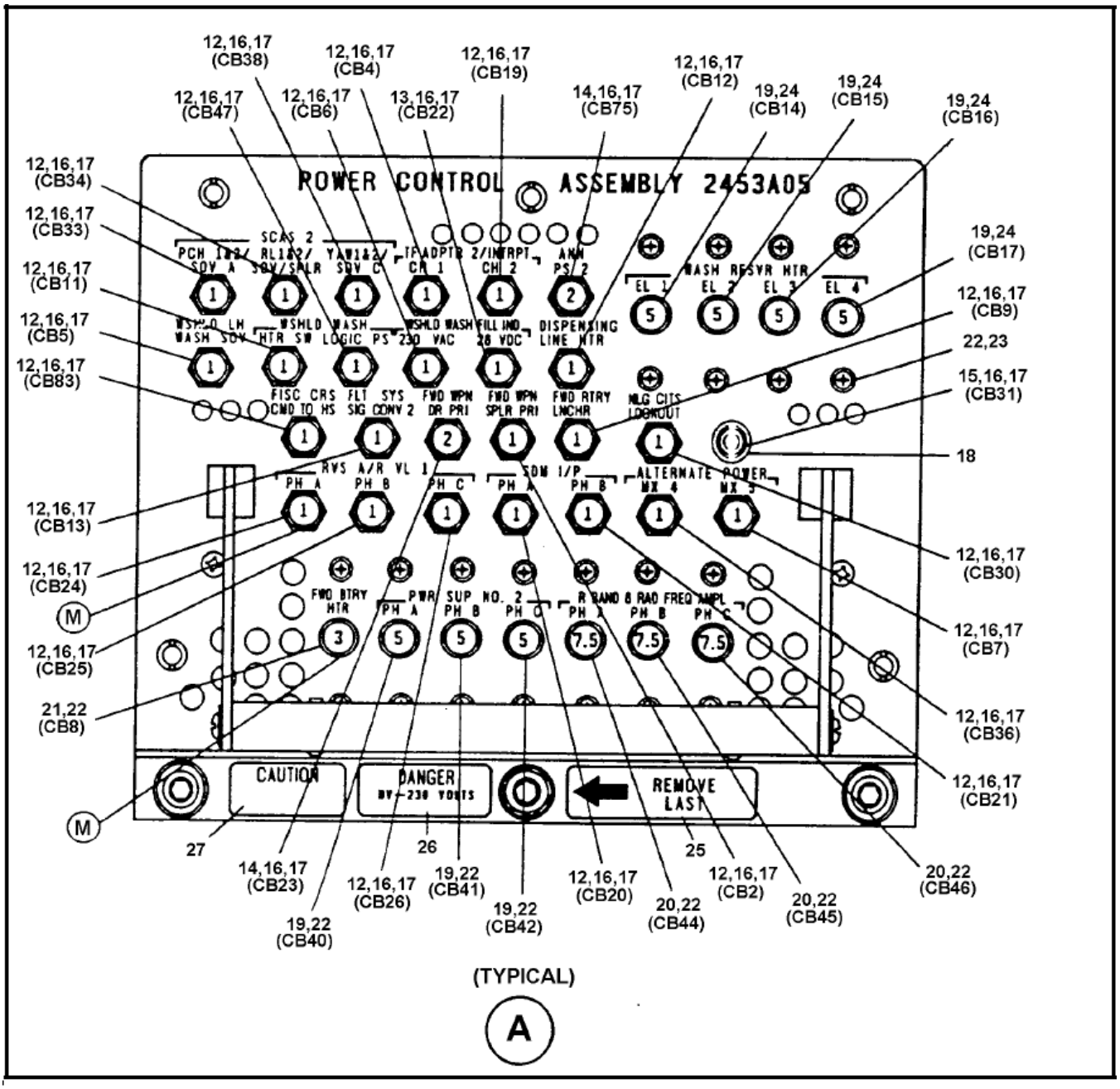

(EXAMPLE NOT TO SCALE)

FIGURE 3. Typical main assemblies listing - Continued.

Downloaded from http://www.everyspec.com

FIGURE & INDEX/ SHEET NO.	PART NUMBER	CAGE	DESCRIPTION 1 2 3 4 5 6 7	UNITS PER ASSY	USEABLE ON CODE	SMR CODE
			POWER CONTROL ASSEMBLY 2453A05			
1/1	15280-507-41	94756	POWER CONTROL ASSEMBLY	REF	A	PAFDA
1/1	15280-507-61	94756	POWER CONTROL ASSEMBLY	REF	B	PAFDA
1/1	15280-507-71	94756	POWER CONTROL ASSEMBLY	REF	C	PAFDA
1/1	15280-507-81	94756	POWER CONTROL ASSEMBLY	REF	D	PAFDA
1/1	15280-507-91	94756	POWER CONTROL ASSEMBLY	REF	E	PAFDA
1/1	15280-507-101	94756	POWER CONTROL ASSEMBLY	REF	F	PAFDA
2/1	15404-507-41	94756	. CHASSIS ASSEMBLY, Inner (for details. . . see Figure 2)	REF	A	XB
2/1	15404-507-61	94756	. CHASSIS ASSEMBLY, Inner (for details. . . see Figure 2)	REF	B	XB
2/1	15404-507-71	94756	. CHASSIS ASSEMBL Inner (for details . . . . see Figure 2)	REF	C	XB
2/1	15404-507-81	94756	. CHASSIS ASSEMBLY, Inner (for details . . see Figure 2)	REF	D	XB
2/1	15404-507-91	94756	. CHASSIS ASSEMBLY, Inner (for details . . see Figure 2)	REF	E	XB
2/1	15404-507-101	94756	. CHASSIS ASSEMBLY, Inner (for details . . see Figure 2)	REF	F	XB
3/1	15400-507-11	94756	. CHASSIS AND SLIDE ASSEMBLY, ... Outer (for details, see Figure 3)	REF	G	XB
3/1	15400-507-31	94756	. CHASSIS AND SLIDE ASSEMBLY, ... Outer (for details, see Figure 3)	REF	H	XB
- 4	15424-507-41	94756	. WIRE HARNESS ASSEMBLY (For . . . . . details, see Figure 4)	REF	A	XB
- 4	15424-507-61	94756	. WIRE HARNESS ASSEMBLY (For . . . . . details, see Figure 4)	REF	B	XB
- 4	15424-507-71	94756	. WIRE HARNESS ASSEMBLY (For. . . . . details, see Figure 4)	REF	C	XB
- 4	15424-507-81	94756	. WIRE HARNESS ASSEMBLY (For. . . . . details, see Figure 4)	REF	D	XB
- 4	15424-507-91	94756	. WIRE HARNESS ASSEMBLY (For . . . . . details, see Figure 4)	REF	E	XB
- 4	15424-507-101	94756	. WIRE HARNESS ASSEMBLY (For . . . . . details, see Figure 4)	REF	F	XB
5/1	14320-507-1	94756	. SERIAL DIGITAL MULTIPLEX . . . . . ASSEMBLY (SDMA)	1		PAFDA
6/1	14320-507-1	94756	. COVER, CHASSIS Outer	1		XB

(EXAMPLE NOT TO SCALE)

FIGURE 3. Typical main assemblies listing - Continued.

Downloaded from http://www.everyspec.com

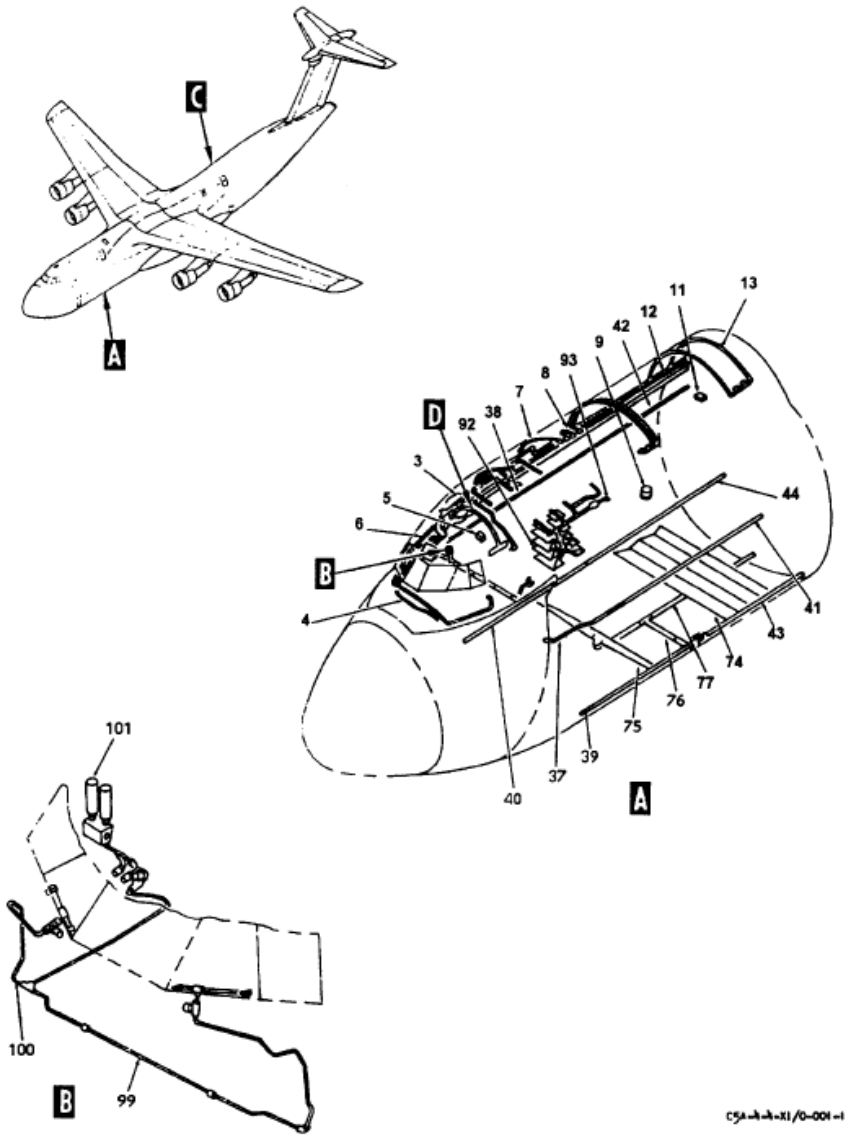

Figure 2. Environmental system (sheet 1 of 3)

(EXAMPLE NOT TO SCALE)

FIGURE 4. Typical functional system listing.

Downloaded from http://www.everyspec.com

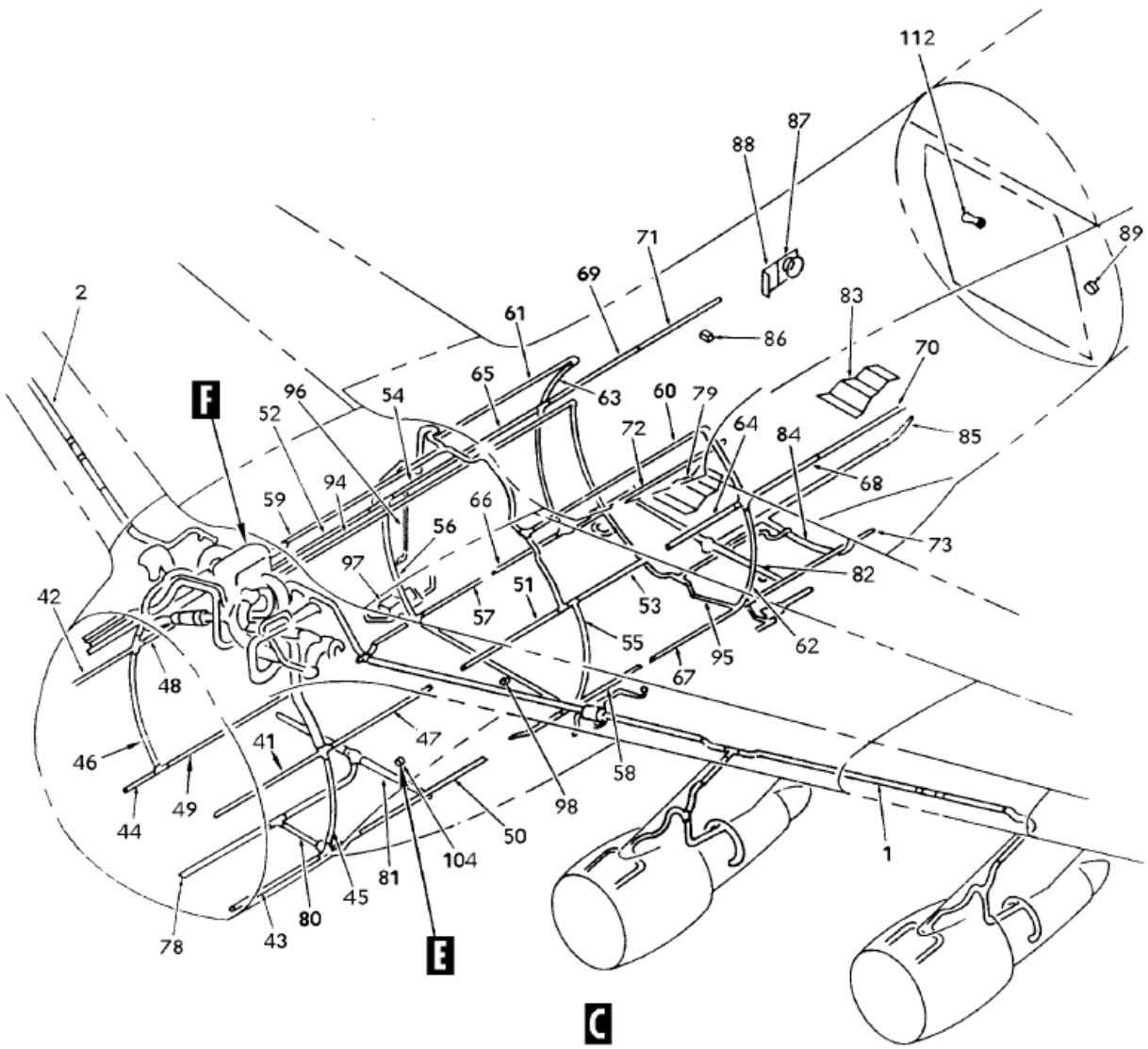

Figure 2. Environmental system (sheet 2)

(EXAMPLE NOT TO SCALE)

FIGURE 4. Typical functional system listing - Continued.

Downloaded from http://www.everyspec.com

FIGURE & INDEX / SHEET NO.	PART NUMBER	CAGE	DESCRIPTION 1 2 3 4 5 6 7	UNITS PER ASSY	USEABLE ON CODE	SMR CODE
2- 29/3	4A10044-101A	11111	. . TRANSMITTER INSTL, Pressure, bleed air MANIFOLD. Fuselage station 1084.000 (Figure 014)	NP		XC
30/3	4A10044-102A	11111	. . TRANSMITTER INSTL, Pressure bleed air manifold, fuselage station 1084.000 (Figure 014)	NP		XC
31/3	4A10014-101A	11111	. . VALVE INSTL, Flow control, air conditioning compartment (Figure 014) (modified by 4A19011-101A and 102A)	NP		XC
32/3	4A10014-102A	11111	. . VALVE INSTL, Flow control, air conditioning compartment (Figure 014) (modified by 4A19011-101A and 102A)	NP		XC
33/3	4A10010-101A	11111	. . BAFFLE INSTL, Air conditioning system isolator (Figure 014)	NP		XC
34/3	4A54000-101A	11111	. . DUCT INSTL, Bleed air manifold, center wing (Figure 014)	NP		XC
35/3	4A10012-103A	11111	. . TUBE INSTL, Overboard drain water separator and bleed air ducts (Figure 014)	NP		XC
36/3	4A10185-101A	11111	. . BRACKET INSTL, Support, environmental equipment fuselage station 1024.000 1084.000 (Figure 014)	NP		XC
37/1	4A11101-101A	11111	. . DUCT INSTL, Air distribution, upper, forward cargo compartment. fuselage station 470.000 to 636.880 (Figure 015)	NP		XC
38/1	4A11101-103A	11111	. . DUCT INSTL, Air distribution, upper forward cargo compartment. fuselage station 470.000 to 636.880 (Figure 015)	NP		XC
39/1	4A11103-103A	11111	. . DUCT INSTL, Air distribution, cargo compartment, fuselage station 543.000 to 776.675 (Figure 015)	NP		XC
40/1	4A11103-105A	11111	. . DUCT INSTL, Air distribution, cargo compartment, fuselage station 543.000 to 776.675 (Figure 015)	NP		XC
41/1	4A11102-101A	11111	. . DUCT INSTL, Air distribution upper forward cargo compartment. fuselage station 636.880 to 1056.800 (Figure 015)	NP		XC
42/1	4A11102-102A	11111	. . DUCT INSTL, Air distribution upper forward cargo compartment. fuselage station 636.880 to 1056.800 (Figure 015)	NP		XC
43/1	4A11104-101A	11111	. . DUCT INSTL, Air distribution cargo compartment, fuselage station 776.675 to 1056.800 (Figure 015)	NP		XC
44/1	4A11104-102A	11111	. . DUCT INSTL, Air distribution cargo compartment, fuselage station 776.675 to 1056.800 (Figure 015)	NP		XC
45/2	4A11100-101A	11111	. . DUCT INSTL, Air distribution forward cargo compartment. fuselage station 1073.800 (Figure 015)	NP		XC
46/2	4A11100-102A	11111	. . DUCT INSTL, Air distribution forward cargo compartment. fuselage station 1073.800 (Figure 015)	NP		XC
47/2	4A12100-101A	11111	. . DUCT INSTL, Upper center cargo compartment, air distribution, fuselage station 1088.560 TO 1208.500 (Figure 015)	NP		XC

(EXAMPLE NOT TO SCALE)

FIGURE 4. Typical functional system listing - Continued.

Downloaded from http://www.everyspec.com

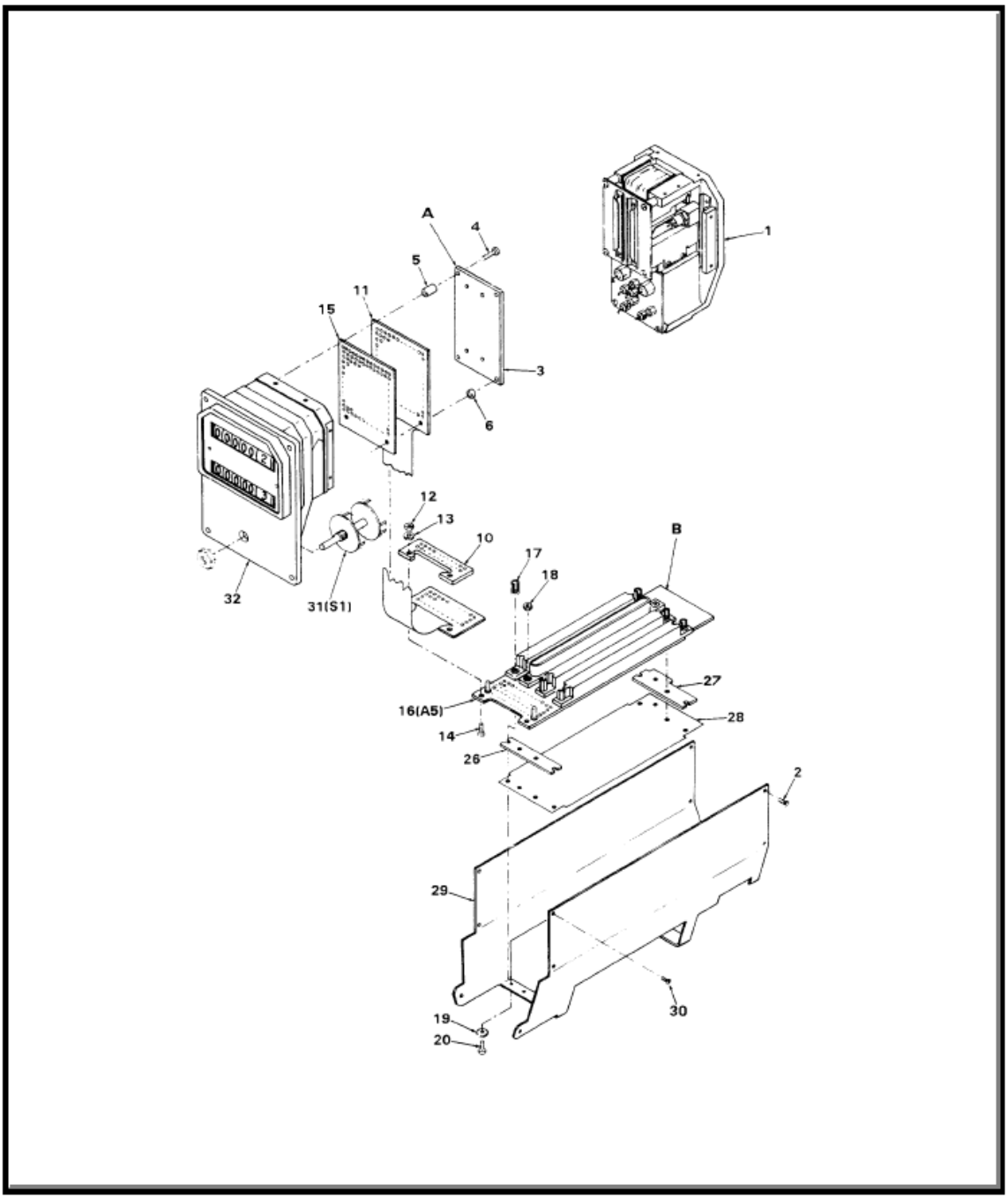

(EXAMPLE NOT TO SCALE)

FIGURE 5. Typical exploded view.

Downloaded from http://www.everyspec.com

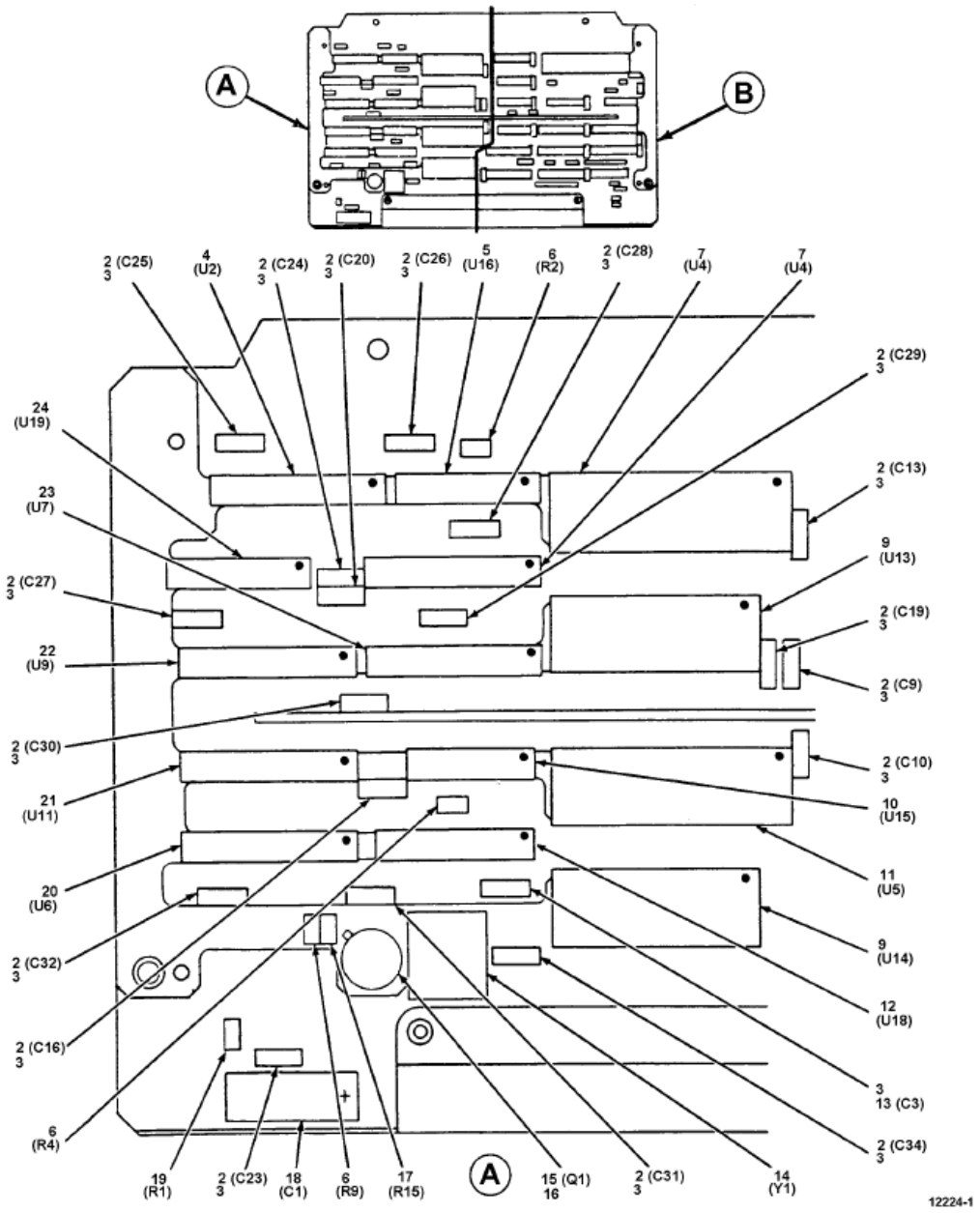

Circuit Card Assembly (sheet 1 of 2)

(EXAMPLE NOT TO SCALE)

FIGURE 6. Typical circuit card assembly listing.

Downloaded from http://www.everyspec.com

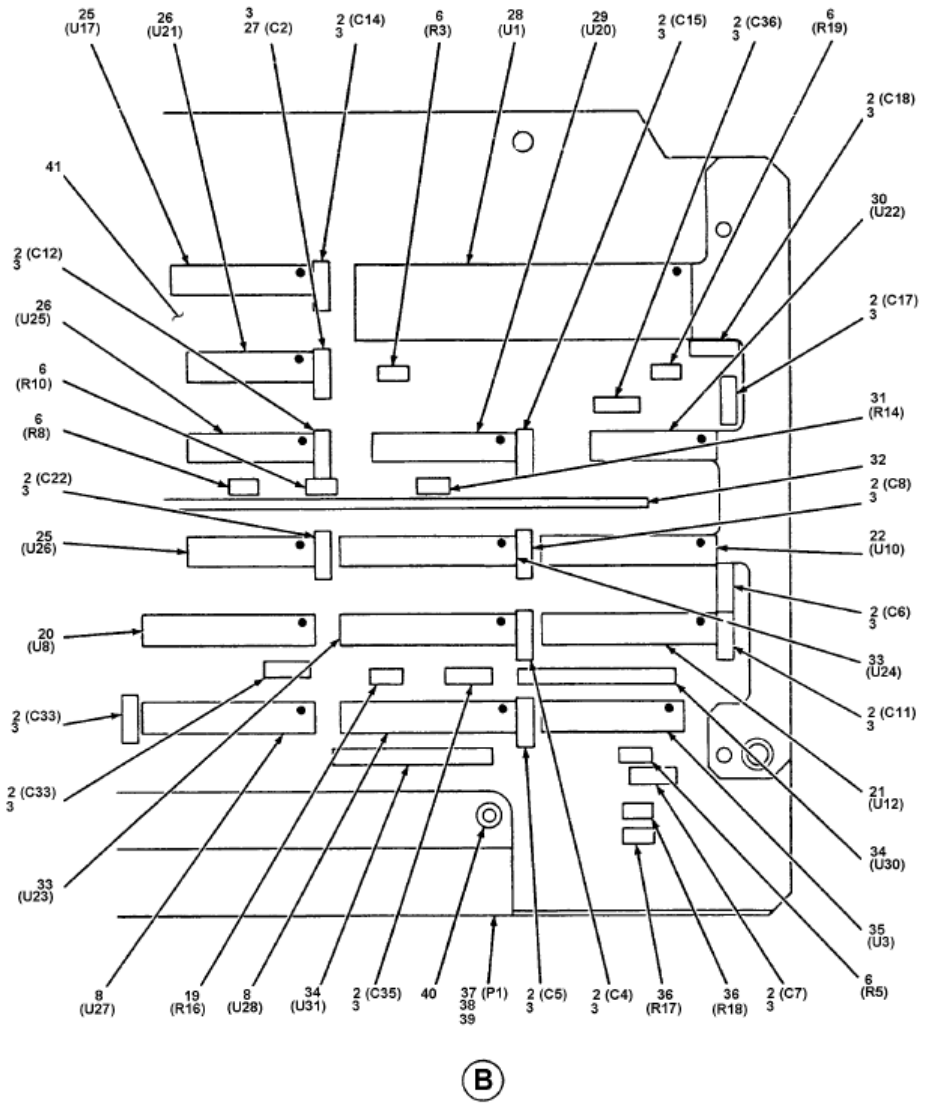

Circuit Card Assembly (sheet 2)

(EXAMPLE NOT TO SCALE)

FIGURE 6. Typical circuit card assembly listing - Continued.

Downloaded from http://www.everyspec.com

FIGURE & INDEX / SHEET NO.	PART NUMBER	CAGE	DESCRIPTION 1 2 3 4 5 6 7	UNITS PER ASSY	USEABLE ON CODE	SMR CODE
2-			CIRCUIT CARD ASSEMBLY, BIU NO. 2.			
1	562-0038-003	78711	CIRCUIT CARD ASSEMBLY, BIU NO. 2 . . . . . (for NHA see Figure 1)	REF		PAFLD
2/1	M39014/02-1230	81349	. CAPACITOR	33		PADZZ
3/1	302-200	32559	. SPACER, Component (Telephonics . . . . . spec control S235A202-3)	35		PADZZ
4/1	MD8288/883B	34649	. MICROCIRCUIT, Digital (Telephonics . . . . . spec control M235A716-1)	1		PADZZ
5/1	MM54C163J/883B	27014	. MICROCIRCUIT, Digital (Telephonics. . . . . spec control M235A720-1)	1		PADZZ
	CD40163BMJ/883	27014				PADZZ
	CD40163BF/3	54590				PADZZ
6/1	RLR05C1002GM	81349	. RESISTOR	8		PADZZ
7/1	562-9001-001	78711	. INTEGRATED Circuit, programmed (Make from 14933 PN DESC8200504YX)	1		MDD
8/1	MM54C941J/883B	27014	. MICROCIRCUIT, Linear (Telephonics . . . . . spec control M235A702-1)	1		PADZZ
9/1	1DT-6116SA-90DB	61772	. MICROCIRCUIT, Digital (Telephonics . . . . . spec control M235A782-3)	2		PADZZ
10/1	M38510/32702BCX	81349	. MICROCIRCUIT	1		PADZZ
11/1	562-9001-002	78711	. INTEGRATED Circuit, programmed (Make from 14933 . . . . PN DESC8200504YX)	1		MDD
12/1	MD8284/B	34649	. MICROCIRCUIT, Linar (Telephonics . . . . . spec control M235A538-1)	1		PADZZ
13/1	M39014/01-1203	81349	. CAPACITOR	1		PADZZ
14/1	174-21-1	00135	. CRYSTAL, 15 MHZ (Telephonics spec . . . . . control C235A374-1)	1		PADZZ
	VM6-1500	21821				PADZZ
	80AX1260-2	57481				PADZZ
15/1	T235A331-2	78711	. TRANSISTOR, Field effect (FET)	1		PADZZ
16/1	M38527/8-40P	81349	. MOUNTING Pad	1		PADZZ
17/1	RLR05C1001GM	81349	. RESISTOR			PADZZ
18/1	M39003/01-2273	81349	. CAPACITOR	1		PADZZ
19/1	RLR05C1001GM	81349	. RESISTOR	2		PADZZ
20/1	560-9003-001	78711	. INTEGRATED Circuit, programed (Make . . . . . from 14933 PN DESC8103602RX)	1		MDD
21/1	M38510/32502BRX	81349	. MICROCIRCUIT	2		PADZZ
22/1	M38510/32803BRX	81349	. MICROCIRCUIT	2		PADZZ
23/1	MM54C240J/883B	27014	. MICROCIRCUIT, Linar (Telephonics . . . . . spec control M235A710-1)	2		PADZZ
24/1	M38510/30702BEX	81349	. MICROCIRCUIT	1		PADZZ
25/2	M235A688-1	78711	. MICROCIRCUIT, Digital	1		PADZZ
26/2	M38510/30501BCX	81349	. MICROCIRCUIT	3		PADZZ
27/2	M39014/02-1218	81349	. CAPACITOR	1		PADZZ
28/2	M235A715-5	78711	. MICROCIRCUIT, Digital	1		PADZZ
	M235A715-1	78711				PADZZ
29/2	M38510/30701BEX	81349	. MICROCIRCUIT	1		PADZZ
30/2	M38510/31004BCX	81349	. MICROCIRCUIT	1		PADZZ
31/2	RLR05C5101GM	81349	. RESISTOR	1		PADZZ

(EXAMPLE NOT TO SCALE)

FIGURE 6. Typical circuit card assembly listing - Continued.

Downloaded from http://www.everyspec.com

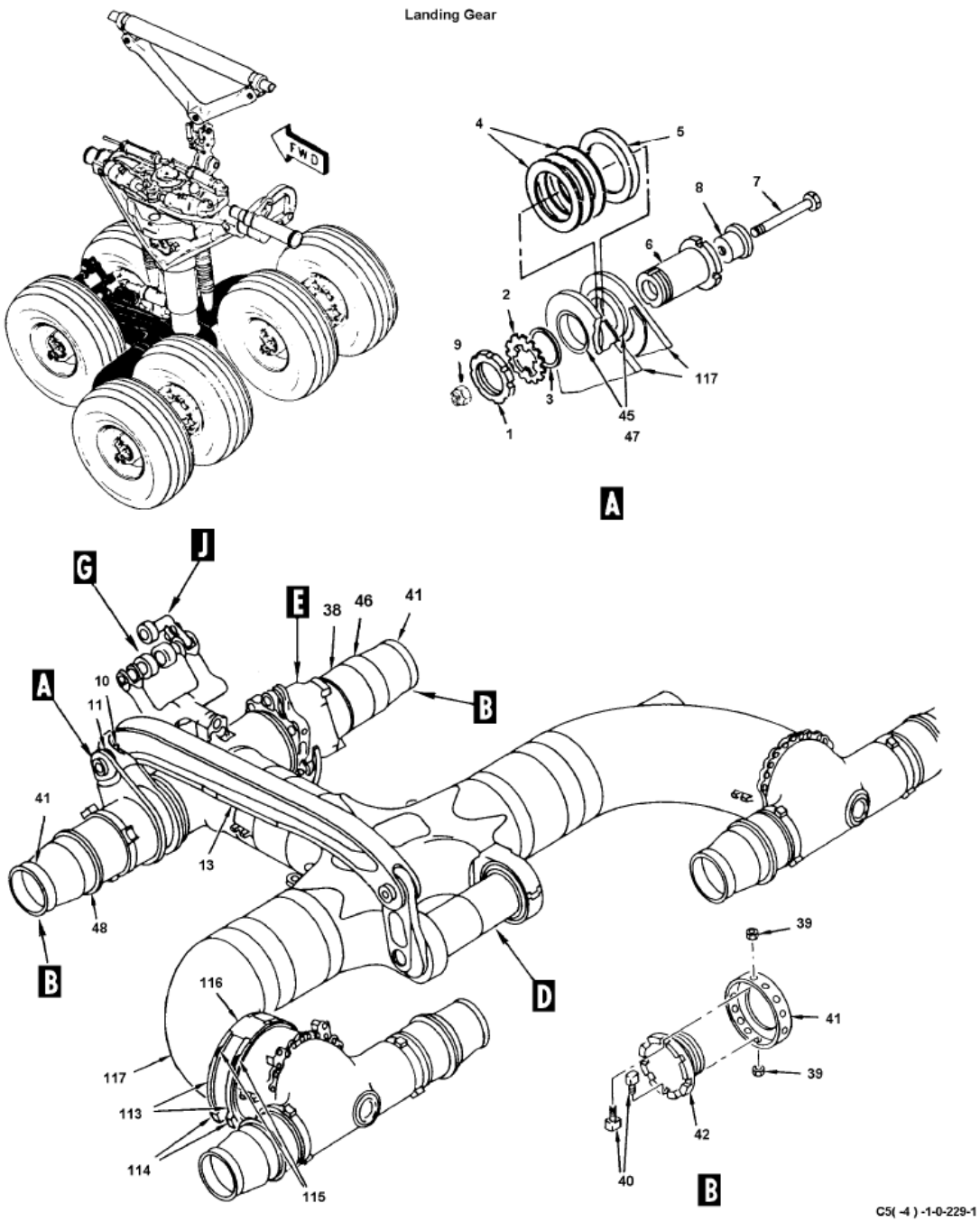

Figure 1. Main Landing Gear Boggie (sheet 1 of 4)

(EXAMPLE NOT TO SCALE)

FIGURE 7. Typical MPL listing.

Downloaded from http://www.everyspec.com

FIGURE & INDEX / SHEET NO.	PART NUMBER	CAGE	DESCRIPTION 1 2 3 4 5 6 7	UNITS PER ASSY	USEABLE ON CODE	SMR CODE
1-			MAIN LANDING GEAR BOGIE			
	4G11014-101B#	11111	. BOGIE, Beam main landing gear (LH) (NHA FIG, 235 and 235)	REF		PAODD
	4G11014-102B#	11111	. BOGIE, Beam, main landing gear (RH) (NHA FIG, 235 and 236)	REF		AOO
1/1	4G19068-101A	11111	. . NUT, Special,brake torque link pin main landing gear (used with 4G19067-101A, 4G19069-101A and 4G19070-101A as A group	2		PAOZZ
2/1	4G10969-101A	11111	. . WASHER, Locknut brake torque compensator pin, main landing gear (Used with 4G10967-101A 4G109068-101A and 4G19070-101A as A group)	2		PAOZZ
3/1	4G13554-101A	11111	. . WASHER, Thrust, axle beam ASSY,main landing gear	2		PAOZZ
4/1	4G14504-101A	11111	. . WASHER, Brake, torque compensator link, main landing gear	AR		PAOZZ
5/1	4G14503-101A	11111	. . WASHER ASSY, Pad, brake torque compensator link main landing gear (May be used when 4G14503-107A not available)	1	B	PAOZZ
5/1	4G14503-107A	11111	. . WASHER ASSY Of, pad torque, torque compensator link main landing gear (Replacement for 4G14503-101A)	1	C	PAOZZ
6/1	4G19067-101A	11111	. . PIN, External thread, brake torque compensator link, main landing gear (used with 4G19068-101A, 4G19069-101A and 4G19070-101A as A group)	2		PAOZZ
7/1	NAS1004-52	11111	. . BOLT	1		PAOZZ
8/1	4G19070-101A		. . ADAPTER, Bracket retainer axle beam ASSY main landing gear (Used with 4G19067-101A, 4G19068-101A and 4G19069-101A as A group)	1		PAOZZ
9/1	52-1650-048	11111	. . NUT, Self-locking, flush 100 degree, sloted, 250 degree fahrenheit (72962) (lockheed spec DWG STSCJ011-08)	1		PAOZZ
	4G11017-1018	11111	. . LINK ASSY, Brake, troque compensating, main landing gear	1		PAOD
10/1	MS15001-1	11111	. . . FITTING	1		PAOZZ
11/1	KWB28-7	11111	. . . BEARING (97613)			
12/1	4G14128-107A	11111	. . . BUSHING, Flanged, main landing gear bogie (Preferred spare in lieu of 4G14128-105A)	1		
13/1	4G11017-103B	11111	. . . LINK, Brake, torque compensating, main landing gear	1		XA
14/4	4G13850-103A	11111	. . BOLT, Special,axle beam main landikg gear	1		PAOZZ
15/4	4G13851-101A	11111	. . WASHER, Special, axle beam main landing gear	1		PAOZZ
16/4	MS21046C7	11111	. . NUT	1		PAOZZ
17/4	4G13852-101B	11111	. . BUSHING, Clamp up, axle beam main landing gear	1		PAOZZ
18/4	4G12414-101A	11111	. . ROLLER ASSY, Lock, main landing gear	1		PAOZZ
	4G12415-101C		. . FITTING ASSY, Lock roller axle, beam assembly, main landing gear	1		PAOLD
19/4	4G13849-105A	11111	. . . BUSHING, Axle beam assv. main landing gear (Spares only) (Preferred spare in lieu of 4G13848-101A and 103A)	1		PAOZZ
20/4	4G13848-105A	11111	. . . BUSHING, Axle beam assy, main landing gear (Spares only) (Preferred spare in lieu of 4G13848-101A and-103A	1		PAOZZ

(EXAMPLE NOT TO SCALE)

FIGURE 7. Typical MPL listing - Continued.

Downloaded from http://www.everyspec.com

FIGURE & INDEX / SHEET NO.	PART NUMBER	CAGE	DESCRIPTION 1 2 3 4 5 6 7	UNITS PER ASSY	USEABLE ON CODE	SMR CODE
1-						
111/2	KWB28-7	11111	. . . BEARING (97613)	1		PAOZZ
112/2	4G11018-103B	11111	. . . GUDGEON, Axle main landing gear	1		PAOZZ
113/2	4G11014-109A	11111	. . STRAP, Axle, forward, axle beam assy, main landing gear	2		PAOZZ
114/1	1522	11111	. . SEAL (00266)	2		PAOZZ
115/1	4G13085-127A	11111	. . PAD, Clamp, hydraulic route, main landing gear (PFD spare in lieu of 4G13085-11A)	2		MOO
116/1	4G14380-101A*	11111	. . PLATE, Configuration, bogie beam assy main landing gear	1		MDO
117/1	4G11014-103C	11111	. . BOGIE ASSY, Beam, main landing gear (FIG. 243)	1		PAODD
	4G11105-101A	11111	. LANDING GEAR Built up unit, main , LH AFT (See TO 4S1-93-12) (NHA FIG,236) (PFD replacement for 4G1105-113A)	1	D	AOO
	4G11105-103A	11111	. LANDING GEAR Built up unit, main RH AFT (See TO 4S1-93-12) (NHA FIG,236) (PFD replacement for 4G1105-115A)	1	D	AOO
118/4	4G13924-101A	11111	. . PIN, Trunion master cylinder main	2	D	PAOZZ

CODE	USABLE ON
A	Aircraft Number/Serial Number through Aircraft Number/Serial Number
B	Aircraft Number/Serial Number through Aircraft Number/Serial Number before TCTO XX-XX-XXX
C	Aircraft Number/Serial Number through Aircraft Number/Serial Number after TCTO XX-XX-XXX

(EXAMPLE NOT TO SCALE)

FIGURE 7. Typical MPL listing - Continued.

Downloaded from http://www.everyspec.com

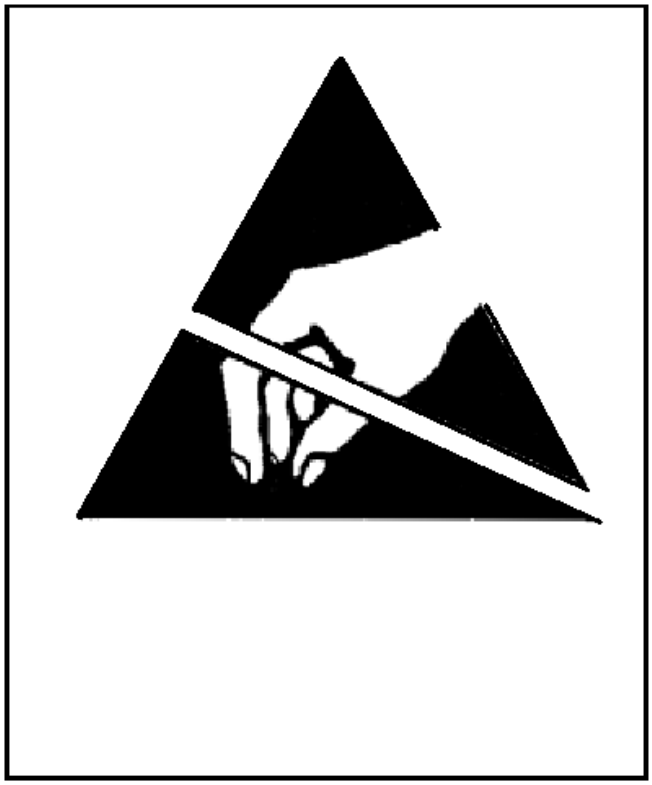

(EXAMPLE NOT TO SCALE)

FIGURE 8. ESDS Symbol.

Downloaded from http://www.everyspec.com

APPENDIX A

ILLUSTRATED PARTS BREAKDOWN MARKUP LANGUAGE TOOLS

A.1 SCOPE

A.1.1 Scope. This appendix describes the standard Air Force (AF) markup language digital tools created for developing and delivering AF Technical Manuals (TMs). These tools are available in the Digital Support Suites (DSS) provided by the AF Technical Manual Specifications and Standards (TMSS) activity (see A.2). This appendix is a mandatory part of this detail specification. The information herein is intended for compliance.

A.1.2 Template Tool. The Document Type Definition (DTD) is the primary tool used as a template for authoring AF TMs and is based on rules outlined in MIL-PRF-28001 and ISO 8879:1986. See A.2.1 for information about the DTD specified for this appendix subset.

A.2 DSS

The DSS is comprised of the following tools for authoring and rendering the TM. See A.3 for information about obtaining DSS component files in digital format through the TMSS activity web site. For information about the current status and availability of DSS tools, see A.3.4.

A.2.1 DTD. The DTD provides the structure and content template in accordance with the content specific requirements of this specification (see 3.1). To be delivered digitally, the TM shall be tagged using the applicable DTD provided through the TMSS activity. Information concerning the markup language type and use of DTDs currently provided, i.e., Standardized General Markup Language (SGML), is available through the contacts listed under A.3.4

A.2.2 Formatted Output Specification Instance (FOSI). DELETED.

A.2.3 Tag Description Table (TDT). The TDT provides detailed descriptions of the elements contained in the DTD. The TDT contains the element tagging structure, parent elements, full element name, source paragraph, attribute descriptions unique to the element, and entities.

A.2.4 OmniMark™. DELETED.

A.3 OBTAINING DSS TOOLS

A.3.1 Obtaining files by users with .mil website access. The following applies to those interested in obtaining DSS component files who are on a .mil internet domain, having .mil web address access.

A.3.1.1 AF TMSS website. DTDs, TDTs, and other files in the DSS can be accessed on the TMSS website at https://techdata.wpafb.af.mil/tmss/index.html. On the web page, the “Baseline Tools” menu option in the left pane contains two bulleted options called “Specifications & Digital Support Suites (DSSs)” and “Standards & Digital Support Suites (DSSs)”. Hover the cursor over “Specifications & Digital Support Suites (DSSs)” and a listing of the TMSS specifications will appear. Hover over the desired specification and another drop down list will appear that contains an entry indicating the PDF version of the specification and other entries for the associated appendices. To obtain the preferred subset DTD, select the desired appendix from the list. The following items will appear on the downloading page: The name of the specification, the appendix number and name, the current version of the DSS, buttons to download specific DSS files provided and a “Download” button to download the entire DSS zip file.

A.3.2 Obtaining files by users with a Public Key Infrastructure (PKI) certificate or a Common Access Card (CAC). The following applies to those interested in obtaining DSS component files who have a PKI certificate or a CAC:

A.3.2.1 AF TMSS SharePoint website. DTDs, TDTs, and other files in the DSS can be accessed at the AF TMSS SharePoint website: https://cs2.eis.af.mil/sites/12316/default.aspx.

A.3.3 Obtaining files by users without .mil access, PKI certificate, or CAC. Those seeking to obtain DSS files who do not have .mil web access, a PKI certificate, or a CAC should contact their Government program management office or see A.3.4 to obtain information.

Downloaded from http://www.everyspec.com

APPENDIX A

A.3.4 TMSS Helpdesk assistance. Address any requests relating to the DSS by e-mail to SGMLSUPPORT@us.af.mil (organizational address: Wright-Patterson AFLCMC/HIS-TMSS Help Desk) or by postal mail to Air Force Technical Manual Specifications and Standards, AFMC/AFLCMC/HIS, 4170 Hebble Creek Road, Building 280, Door 15, Wright-Patterson AFB OH 45433-5653.

Downloaded from http://www.everyspec.com

CONCLUDING MATERIAL

Custodians:
Air Force - 16

Preparing activity:
Air Force - 16
(Project TMSS-2020-007)

Review activities:
Air Force - 10, 13, 68, 70, 85, 170

NOTE: The activities listed above were interested in this document as of the date of this document. Since organizations and responsibilities can change, you should verify the currency of the information above using the ASSIST Online database at https://assist.dla.mil.