Downloaded from http://www.everyspec.com

INCH-POUND

MIL-DTL-3701D
14 September 2007
SUPERSEDING
MIL-DTL-3701C
21 December 1998

DETAIL SPECIFICATION

CYLINDERS, COMPRESSED GAS: DOT-8 ACETYLENE, WITH VALVES

This specification is approved for use by all departments and agencies of the Department of Defense.

1. SCOPE

1.1 Scope. This specification covers new steel cylinders, with applicable valves and caps, intended for acetylene service.

1.2 Classification. The cylinders covered by this specification are of the capacities shown in table I, as specified (see 6.2).

TABLE I. Physical characteristics.

Capacity (in cubic feet (ft^3))	Dimensions (in inches)		Inlet threads	Flange specification	Cap specification	Valve (specification MIL-DTL-2)
	OD	Hgt.				
010 ft^3	4 ± 0.5	12.5 ± 1	0.375 inch - 18 NGT	N/A	N/A	V3-200-1
040 ft^3	6 ± 0.5	20.0 ± 1	0.375 inch - 18 NGT	N/A	N/A	V3-200-1
075 ft^3	7 ± 0.5	26.0 ± 1	1 inch - 11.5 NGT	MIL-C-17376/2	MIL-C-17376/1	V2-510-0
190 ft^3	9.5 ± 0.5	32.5 ± 1	1 inch - 11.5 NGT	MIL-C-17376/2	MIL-C-17376/1	V2-510-0
225 ft^3	12 ± 0.5	29.0 ± 1	1 inch - 11.5 NGT	MIL-C-17376/2	MIL-C-17376/1	V2-510-0
360 ft^3	12 ± 0.5	41.0 ± 1	1 inch - 11.5 NGT	MIL-C-17376/2	MIL-C-17376/1	V2-510-0

Comments, suggestions, or questions on this document should be addressed to Defense Supply Center Richmond, ATTN: DSCR-VEB, 8000 Jefferson Davis Highway, Richmond, VA 23297-5616 or e-mailed to STDZNMGT@dla.mil. Since contact information can change, you may want to verify the currency of this address information using the ASSIST database at http://assist.daps.dla.mil.

AMSC N/A FSC 8120

Downloaded from http://www.everyspec.com

1.4 Part or identifying number (PIN). The PIN to be used for cylinders acquired to this specification is created as follows:

M 3701 - XXX

- XXX — Size: cylinder capacity in cubic feet (see table I)
- 3701 — Specification number
- M — Prefix for military specification

2. APPLICABLE DOCUMENTS

2.1 General. The documents listed in this section are specified in sections 3 and 4 of this specification. This section does not include documents cited in other sections of this specification or recommended for additional information or as examples. While every effort has been made to ensure the completeness of this list, document users are cautioned that they must meet all specified requirements of the documents cited in sections 3 and 4 of this specification, whether or not they are listed.

2.2 Government documents.

2.2.1 Specifications, standards, and handbooks. The following specifications, standards, and handbooks form a part of this document to the extent specified herein. Unless otherwise specified, the issues of these documents are those cited in the solicitation or contract (see 6.2).

DEPARTMENT OF DEFENSE SPECIFICATIONS

MIL-DTL-2	- Valves, Cylinder, Gas (for Compressed or Liquefied Gases), General Specification for.
MIL-DTL-2/2	- Valve, Cylinder, Gas: Acetylene, Outlet 510, Inlet 1.00 Inch (Pressures Through 500 psig (3450 kPa) at 70 °F (21.1 °C).
MIL-DTL-2/3	- Valve, Cylinder, Gas: Acetylene, Outlet 200 (Pressures Through 500 psig (3450 kPa) at 70 °F (21.1 °C).
MIL-C-17376/1	- Caps and Flanges, Compressed-Gas Cylinder: Caps.
MIL-C-17376/2	- Caps and Flanges, Compressed-Gas Cylinder: Flanges, Low Pressure.

DEPARTMENT OF DEFENSE STANDARDS

MIL-STD-101	- Color Code for Pipelines and for Compressed Gas Cylinders.

(Copies of these documents are available at http://assist.daps.dla.mil or from the Standardization Document Order Desk, 700 Robbins Avenue, Building 4D, Philadelphia, PA 19111-5094.)

Downloaded from http://www.everyspec.com

2.2.2 Other government documents, drawings, and publications. The following other government documents, drawings, and publications form a part of this document to the extent specified herein. Unless otherwise specified, the issues of these documents are those cited in the solicitation or contract (see 6.2).

CODE OF FEDERAL REGULATIONS (CFR)

49 CFR - Transportation.

(Copies of these documents are available at http://www.access.gpo.gov/ or from Superintendent of Documents, P.O. Box 371954, Pittsburgh, PA 15250-7954.)

2.3 Non-government publications. The following documents form a part of this document to the extent specified herein. Unless otherwise specified, the issues of these documents are those cited in the solicitation or contract (see 6.2).

ASTM INTERNATIONAL

ASTM D 329 - Standard Specification for Acetone.

(Copies of these documents are available at http://www.astm.org/ or from ASTM International, 100 Barr Harbor Drive, P.O. Box C700, West Conshohocken, PA 19428-2959.)

COMPRESSED GAS ASSOCIATION (CGA)

CGA TB-17 - Test Methods for Evaluating Paints and Coatings on Refillable Steel Compressed Gas Cylinders.

(Copies of these documents are available at http://www.cganet.com/ or from Compressed Gas Association, 4221 Walney Road, 5th Floor, Chantilly, VA 20151-2923.)

2.4 Order of precedence. In the event of a conflict between the text of this document and the references cited herein, the text of this document takes precedence. Nothing in this document, however, supersedes applicable laws and regulations unless a specific exemption has been obtained.

Downloaded from http://www.everyspec.com

3. REQUIREMENTS

3.1 Construction. The acetylene cylinders shall conform to the requirements for DOT-8 cylinders in accordance with 49 CFR 171-178. The cylinders shall be within the dimensions specified in table I in accordance with figure 1. The cylinders shall be true of form and shall be stable in the upright position. Foot rings formed and welded to convex bottom designs or rolled from the extended side walls of cylinders of unit construction using concave bottom designs shall have a minimum of two ventilation and two drainage holes equally spaced in the circumference. The properties of the cured filler, the filler shrinkage or clearance limits, and the use of wells under the flange or neck shall conform to 49 CFR. The porosity of the filler shall exceed 83 percent of the total cylinder volume. Acetone infiltration shall be at lest 97 percent of the maximum level permitted by 49 CFR. The acetone shall be of technical grade conforming to ASTM D 329.

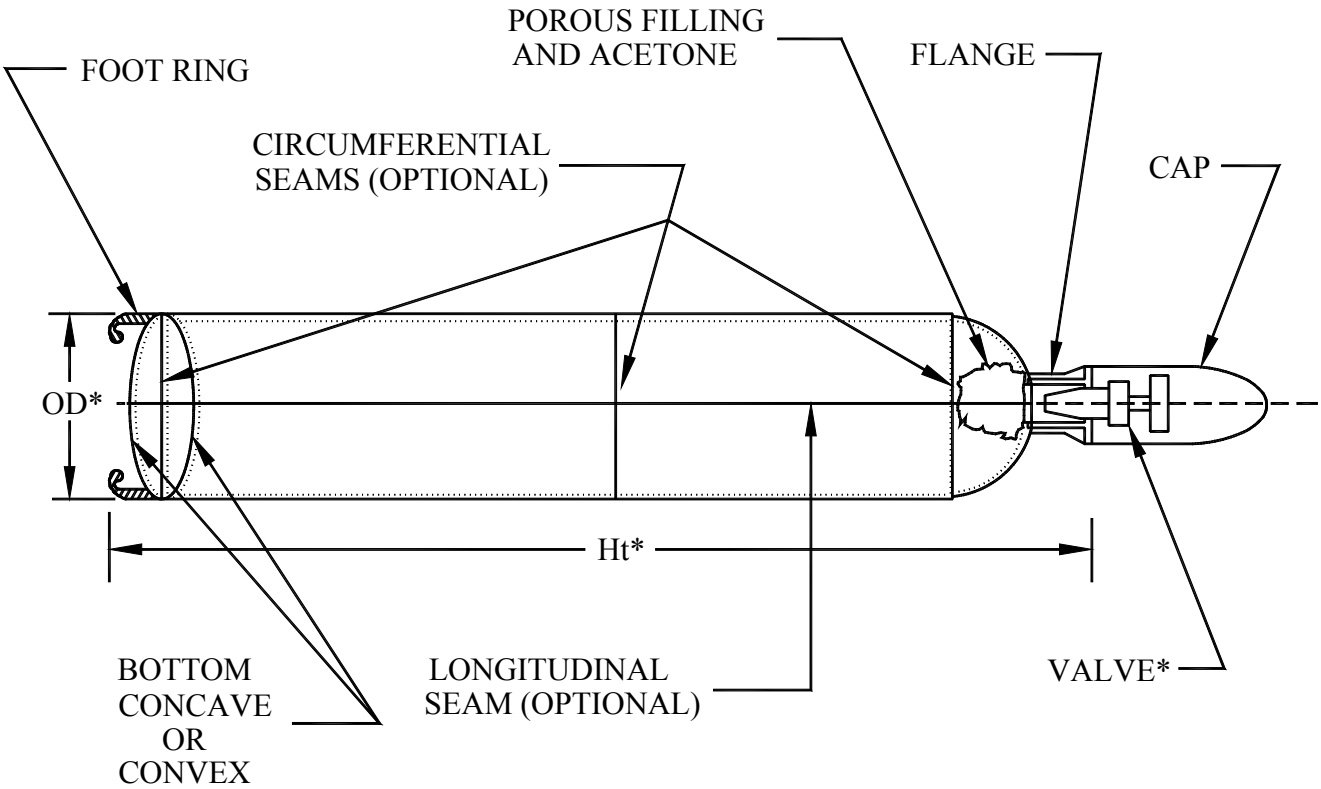

*See table I.

FIGURE 1. DOT-8 acetylene cylinders.

3.2 Cylinder processing. After shaping, deburring, assembly, and welding, and before placement of the porous filler into the cylinder, the internal surfaces shall be free of residual hydrocarbons. Drawn shells shall be protected against deterioration and corrosion but internal rust bloom is acceptable. The filler shall be poured into the cylinder and shall be thoroughly cured prior to infiltration with acetone.

Downloaded from http://www.everyspec.com

3.3 Flanges, valves, and caps. The cylinder shall be fitted with a steel flange conforming to MIL-C-17376/2 as specified in table I. When specified (see 6.2), 10 and 40 cubic foot cylinders shall be supplied with a drilled and threaded boss welded to the cylinder. Each acetylene cylinder shall be fitted with a valve in accordance with MIL-DTL-2 as specified in table I. Valve V2-510-0 shall conform to MIL-DTL-2/2 and valve V3-200-1 shall conform to MIL-DTL-2/3. Each cylinder with a flange shall be supplied with a valve protection cap conforming to MIL-C-17376/1.

3.4 Tare weight. The tare weight of the cylinder shall be the weight of the cylinder, flange, and valve, including the porous filler and acetone but excluding the valve protection cap. The tare weight for 10-cubic-foot cylinders shall be stamped in 1-ounce increments. Tare weights of larger acetylene cylinders shall be measured in pounds and quarter-pounds, expressed in 4-ounce increments to the nearest quarter-pound. The figures expressing pounds shall be separated from the figures expressing ounces by a dash (-).

3.5 Test date. The cylinders shall be delivered within one year of the test date stamped on the cylinder.

3.6 Cylinder identification. Unless otherwise specified herein, marking shall be in characters not less than 3/16 inch high for 10 cubic foot cylinders. On larger cylinders marking shall be in characters not less than 3/8 inch high.

3.6.1 Standard markings. Standard markings shall be plainly and permanently marked by stamping on the shoulder of each cylinder starting near the neck as follows:

a. "DOT-8" followed by the service pressure.
b. Serial number (see 6.3).
c. "US GOVT", government symbol as registered with the Department of Transportation.
d. Date of test, stamped diametrically opposite the above marking.
e. The inspector's official mark as applicable.
f. Manufacturer's mark, stamped near the date of test (preferably right above it).
g. The tare weight (see 3.4), stamped in a position other than in sequence with the serial number or test date, and preceded by the letters "TW".
h. Capacity of acetylene gas in cubic feet (see 1.2), preceded by the letters "CAP".

3.6.2 Additional markings. In addition to the above markings, the cylinders shall bear the following markings:

a. The name of the gas, stenciled on the cylinder in accordance with MIL-STD-101.
b. Decalcomanias when specified (see 6.2), affixed diametrically opposite to one another on the sides of the cylinder, 90 degrees from the stenciled name of the gas.

3.7 Treatment and painting. The treatment and painting of cylinders shall be by any method or system that will provide a finish that will meet the requirements of the CGA TB-17. The cylinders shall be color coded and stenciled in accordance with the requirements of MIL-STD-101.

Downloaded from http://www.everyspec.com

3.8 Workmanship. Cylinders, valves, plugs, flanges, and caps shall be clean and free from grit and loose scale. Edges shall be rounded or chamfered. Cylinders shall be cleaned and free of other surface defects detrimental to the intended use.

3.9 Recycled, recovered, or environmentally preferable materials. Recycled, recovered, or environmentally preferable materials should be used to the maximum extent possible provided that the material meets or exceeds the operational and maintenance requirements and promotes economically advantageous life cycle costs.

4. VERIFICATION

4.1 Classification of inspections. The inspection requirements specified herein are classified as conformance inspection.

4.2 Conformance inspection.

4.2.1 Examination. Each cylinder shall be examined for the defects as listed in table II. The presence of one or more defect shall be cause for rejection.

TABLE II. Processing defects.

Defect code	Defect	Requirement paragraph
101	Cylinder not in accordance with 49 CFR or specification DOT-8	3.1
102	Dimensions not as specified	3.1
103	Construction not as specified	3.1
104	Porous filler and acetone infiltration not as specified	3.1
105	Cylinder processing not as specified	3.2
106	Flanges, valves, and caps not as specified	3.3
107	Tare weight not as specified	3.4
108	Test date more than one year prior to the date of acceptance by the government	3.5
109	Marking not as specified	3.6
110	Treatment not as specified	3.7
111	Workmanship not as specified	3.8

4.2.2 Tests. Each cylinder shall be tested in accordance with 49 CFR to determine compliance with the specified requirements. Nonconformance to any requirement of 49 CFR shall constitute failure of this test.

Downloaded from http://www.everyspec.com

5. PACKAGING

5.1 Packaging. For acquisition purposes, the packaging requirements shall be as specified in the contract or order (see 6.2). When packaging of materiel is to be performed by DoD or in-house contractor personnel, these personnel need to contact the responsible packaging activity to ascertain packaging requirements. Packaging requirements are maintained by the inventory control point's packaging activities within the military service or defense agency, or within the military service's system command. Packaging data retrieval is available from the managing military department's or defense agency's automated packaging files, CD-ROM products, or by contacting the responsible packaging activity.

6. NOTES

(This section contains information of a general or explanatory nature that may be helpful, but is not mandatory.)

6.1 Intended use. DOT-8 compressed gas cylinders are intended for use in the transportation and storage of acetylene gas.

6.1.1 Military unique rationale. These cylinders may be subjected to harsh environments including temperature extremes and salt water corrosion. For this reason, they require surface preparation and painting beyond that normally provided for commercial cylinders. Additionally, the valves, which are included as an integral part of the cylinders, are constructed to standards that exceed those manufactured for commercial customers.

6.2 Acquisition requirements. Acquisition documents should specify the following:

a. Title, number, and date of this specification.
b. Cylinder capacity required (see 1.2).
c. Specific issue of individual documents referenced (see 2.2.1, 2.2.2, and 2.3).
d. Drilled and threaded boss, if required (see 3.3).
e. Decalcomanias, if required (see 3.6.2).
f. Packaging (see 5.1).

6.3 Serial numbering. Cylinder serial numbers will be prefixed by a two or three digit symbol designating the procuring agency and will have a two-letter suffix designating the supplier. The number will be assigned and affixed by the supplier to the individual cylinders. These numbers may be consecutive with the supplier’s regular production numbers or of a series established specifically for customer’s cylinders. However, all cylinders on a given contract will be numbered consecutively and controls will be exercised to preclude duplication with future deliveries to the government.

Downloaded from http://www.everyspec.com

6.4 Subject term (key word) listing.

acetone
cap
flange
porous filling

6.5 Changes from previous issue. Marginal notations are not used in this revision to identify changes with respect to the previous issue due to the extent of the changes.

Custodian:
Navy - SH

Preparing Activity:
DLA - GS7

(Project 8120-2005-002)

Review Activities:
Navy - MC

NOTE: The activities listed above were interested in this document as of the date of this document. Since organizations and responsibilities can change, you should verify the currency of the information above using the ASSIST database at http://assist.daps.dla.mil.