Downloaded from http://www.everyspec.com

INCH-POUND

MIL-DTL-32376
8 March 2011
SUPERSEDING
AN3111
22 October 1948

DETAIL SPECIFICATION

RING - BONDING, ELECTRICAL CONNECTOR

This specification is approved for use by all Departments and Agencies of the Department of Defense.

1. SCOPE

1.1 Scope. This specification covers the general requirements for bonding rings, which are used to provide grounding to shielding that is employed on solder type electrical connector assemblies using AN-type shells.

1.2 Classification. The bonding rings are of the sizes specified below.

1.2.1 Size. The bonding ring sizes are listed in figure 1 as trade numbers (see 6.2).

1.3 Part or identifying number (PIN). The PIN to be used for bonding rings acquired to this specification is created as follows:

AN 3111 - XX

- XX — Size: Trade number from figure 1
- 3111 — Specification number
- AN — AN prefix (retaining AN part number)

Example of reference part number: AN3111-2
NOTE: Trade number can be as few as one digit or as many as two digits.

Comments, suggestions, or questions on this document should be addressed to Defense Logistics Agency Aviation VEB, 8000 Jefferson Davis Highway, Richmond, VA 23297-5616, or e-mailed to STDZNMGT@dla.mil. Since contact information can change, you may want to verify the currency of this address information using the ASSIST database at https://assist.daps.dla.mil/.

Downloaded from http://www.everyspec.com

2. APPLICABLE DOCUMENTS

2.1 General. The documents listed in this section are specified in sections 3 and 4 of this specification. This section does not include documents cited in other sections of this specification or recommended for additional information or as examples. While every effort has been made to ensure the completeness of this list, document users are cautioned that they must meet all specified requirements of the documents cited in sections 3 and 4 of this specification, whether or not they are listed.

2.2 Non-government publications. The following documents form a part of this document to the extent specified herein. Unless otherwise specified, the issues of these documents are those cited in the solicitation or contract.

AMERICAN SOCIETY FOR QUALITY (ASQ)

ASQ Z1.4 - Sampling Procedures and Tables for Inspection by Attributes

(Copies of this document are available online at http://www.asq.org or from the American Society for Quality, 600 North Plankinton Avenue, Milwaukee, WI 53023.)

ASTM INTERNATIONAL

ASTM B272 - Standard Specification for Copper Flat Products with Finished (Rolled or Drawn) Edges (Flat Wire and Strip)

(Copies of this document are available online at http://www.astm.org or from ASTM International, 100 Barr Harbor Drive, P.O. Box C700, West Conshohocken, PA 19428-2959.)

2.3 Order of precedence. Unless otherwise noted herein or in the contract, in the event of a conflict between the text of this document and the references cited herein, the text of this document takes precedence. Nothing in this document, however, supersedes applicable laws and regulations unless a specific exemption has been obtained.

3. REQUIREMENTS

3.1 Construction. The dimensions of the bonding rings shall be in accordance with figure 1.

3.2 Materials. The bonding rings shall consist of tin-plated soft copper in accordance with standard O61, annealed, of ASTM B272.

Downloaded from http://www.everyspec.com

3.3 Recycled, recovered, or environmentally preferable materials. Recycled, recovered, or environmentally preferable materials should be used to the maximum extent possible, provided that the material meets or exceeds the operational and maintenance requirements, and promotes economically advantageous life cycle costs.

4. VERIFICATION

4.1 Classification of inspection. The inspection requirement specified herein is classified as conformance inspection (see 4.3).

4.2 Sampling.

4.2.1 Lot. For purposes of sampling, a lot shall consist of bonding rings of the same size, and processes from the same lot of metal sheeting.

4.2.2 Sampling for conformance inspection. A random sample of bonding rings shall be selected from each lot and subjected to the inspection specified in 4.3. Sampling shall be in accordance with ASQ Z1.4, inspection level I, with the acceptance quality limit (AQL) as specified in the contract (see 6.2).

4.3 Conformance inspection. Unless otherwise specified, each of the sample bonding rings selected in accordance with 4.2.2 shall be examined to verify that the dimensional measurements are as specified in 3.1. Any dimension not meeting the requirements specified in 3.1 shall constitute a failure.

5. PACKAGING

5.1 Packaging. For acquisition purposes, the packaging requirements shall be as specified in the contract or order (see 6.2). When packaging of materiel is to be performed by DoD or in-house contractor personnel, these personnel need to contact the responsible packaging activity to ascertain packaging requirements. Packaging requirements are maintained by the Inventory Control Point's packaging activities within the Military Service or Defense Agency, or within the military service's system commands. Packaging data retrieval is available from the managing Military Department's or Defense Agency's automated packaging files, CD-ROM products, or by contacting the responsible packaging activity.

6. NOTES

(This section contains information of a general or explanatory nature that may be helpful, but is not mandatory.)

6.1 Intended use. The bonding rings covered by this specification are intended to provide grounding to shielding that is employed on solder type electrical connector assemblies using AN-type shells.

Downloaded from http://www.everyspec.com

6.2 Acquisition requirements. Acquisition documents should specify the following:

a. Title, number, and date of this specification.
b. Size (see 1.2.1).
c. AQL (see 4.2.2).
d. Packaging requirements (see 5.1).

6.3 Subject term (key word) listing.

AN-type connector
Shielding ground terminal
Wire harness shielding

Downloaded from http://www.everyspec.com

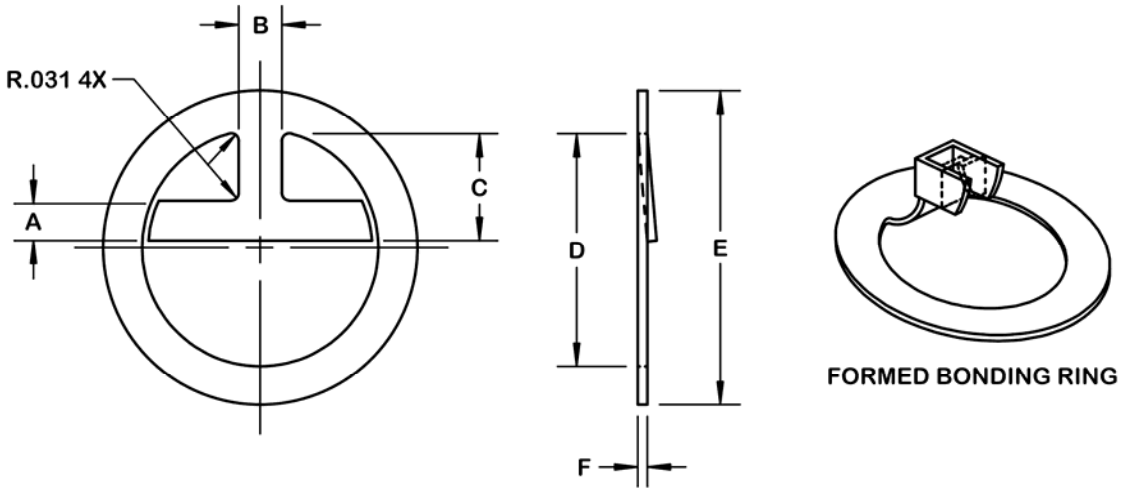

Trade no.	Use with AN shell size	A	B	C	D Diameter ±.005	E Diameter ±.005	F +.005/ -.002
-1	8S and 10S	.062	.062	.156	.323	.448	.020
-2	10SL, 12, and 12S	.062	.062	.188	.441	.566	
-3	14 and 14S	.062	.062	.188	.557	.682	
-4	16 and 16S	.094	.094	.406	.620	.807	
-5	18	.125	.125	.312	.682	.932	
-6	20 and 22	.125	.125	.500	.914	1.105	
-7	24 and 28	.125	.125	.438	1.105	1.355	
-8	32	.125	.125	.562	1.418	1.668	.032
-9	36	.125	.125	.562	1.668	1.918	
-10	40	.125	.125	.562	1.910	2.160	
-11	44	.125	.125	.688	2.160	2.410	
-12	48	.125	.125	.688	2.660	2.910	

NOTES:
1. Dimensions are in inches.
2. Unless otherwise shown, all tolerances are ±.010.

FIGURE 1. Bonding ring.

Downloaded from http://www.everyspec.com

Custodians:
Army - AV
Navy - AS
Air Force - 85
DLA - GS

Review Activities:
Army - MI
Air Force - 99

Preparing Activity:
DLA - GS4

(Project 5975-2011-005)

NOTE: The activities listed above were interested in this document as of the date of this document. Since organizations and responsibilities can change, you should verify the currency of the information above using the ASSIST database at https://assist.daps.dla.mil/.