Downloaded from http://www.everyspec.com

INCH-POUND

MIL-DTL-32248 (AR)
14 April 2008
SUPERSEDING
DTL12977364A
15 AUGUST 2001

DETAIL SPECIFICATION

CARTRIDGE, IGNITION: M1020
FOR THE 120MM MORTAR M120 AND M121

This specification is approved for use by the U.S. Army Armament Research, Development and Engineering Center (ARDEC), and is available for use by all Departments and Agencies of the Department of Defense.

1. SCOPE

1.1 Scope. This specification covers the requirements, examinations and tests for the parts and Loading, Assembling and Packing (LAP) of M1020 Ignition Cartridges for 120mm Mortar Ammunition.

Comments, suggestions, or questions on this document should be addressed to the Commander, U.S. Army ARDEC, ATTN: AMSRD-AAR-QES-S, Picatinny, NJ 07806-5000 or emailed to ardecstdzn@conus.army.mil. Since contact information can change, you may want to verify the currency of this address information using the ASSIST Online database at http://assist.daps.dla.mil.

AMSC N/A FSC 1315

DISTRIBUTION STATEMENT A. Approved for public release; distribution is unlimited.

Downloaded from http://www.everyspec.com

2. APPLICABLE DOCUMENTS

2.1 General. The documents listed in this section are needed to meet the requirements specified in sections 3 and 4 of this detail specification. This section does not include documents in other sections of this detail specification or recommended for additional information or as examples. While every effort has been made to ensure the completeness of this list, document users are cautioned that they must meet all requirements, documents cited in sections 3 and 4 of this detail specification, whether or not they are listed.

2.2 Government Documents.

2.2.1 Specifications, standards, and handbooks. The following specifications, standards, and handbooks form a part of this document to the extent specified herein. Unless otherwise specified, the issues of these documents are those cited in the solicitation or contract.

DEPARTMENT OF DEFENSE SPECIFICATIONS

MIL-P-00223 – Powder, Black

DEPARTMENT OF DEFENSE STANDARDS

MIL-STD-1916 DOD Preferred Methods for Acceptance of Product
MIL-STD-1168 Ammunition Lot Numbering and Ammunition Data Card

(Copies of these documents are available online at http://assist.daps.dla.mil/quicksearch/ or http://assist.daps.dla.mil or from the Standardization Documents Order Desk, 700 Robbins Avenue, Bldg. 4D, Philadelphia, PA 19111-5094.)

2.2.2 Other Government documents, drawings, and publications. The following other Government documents, drawings, and publications form a part of this document to the extent specified herein. Unless otherwise specified, the issues are those cited in the solicitation.

U.S. ARMY ARMAMENT RESEARCH, DEVELOPMENT AND ENGINEERING CENTER (ARDEC) DRAWINGS

9233459 Tape Pressure Sensitive
12977240 Primer, Fed 150
12977364 Cartridge, Ignition, M1020
12977467 Head Loading Assembly
12977468 Head Assembly
12977469 Head
12977470 Plug, Firing
12977471 O-ring, Firing Plug
12977472 Body Loading Assembly
12977473 Body

Downloaded from http://www.everyspec.com

12977474	Flash Tube Assembly
12977475	Tube, Flash
12977477	Tube Assembly
12977478	Tube, Paper
12977480	Cap
12989962	Pin
13000846	Flash Tube Seal Fitting
13000847	Pellet
12977160	Drop Test fixture

U.S. ARMY ARMAMENT RESEARCH, DEVELOPMENT AND ENGINEERING CENTER (ARDEC)

DTL14000008 – Propellant M48 (Ball Powder)

(Copies of these drawings maybe requested online at pica.drawing.request@conus.army.mil or from US Army ARDEC, ATTN: AMSRD-AAR-AIS-T, Picatinny Arsenal, NJ 07806-5000)

2.3 Non-Government publications. The following documents form a part of this document to the extent specified herein. Unless otherwise specified, the issues of these documents are those cited in the solicitation.

ASTM International

ASTM B117 Standard Test Method of Salt Spray (Fog) Apparatus

(Copies of ASTM standards are available online from http://www.astm.org)

2.4 Order of precedence. In the event of a conflict between the text of this document and the references cited herein, except references to higher level program unique specifications for this program, the text of this document takes precedence. Nothing in this document, however, supersedes applicable laws and regulations unless a specific exemption has been obtained.

3. REQUIREMENTS

3.1 First article. When specified (see 6.2), a sample shall be subjected to first article inspection in accordance with 4.2.

3.2 Corrosion resistance (salt spray). Parts selected for the salt spray test shall show no evidence of pitting or mottling.

3.3 Components and assemblies.

3.3.1 Pellet. The pellet shall conform to drawing 13000847.

Downloaded from http://www.everyspec.com

3.3.2 O-ring, Firing Plug. The O-ring shall conform to drawing 12977471.

3.3.3 Plug, Firing. The firing plug shall conform to drawing 12977470.

3.3.4 Head. The head shall conform to drawing 12977469.

3.3.5 Head Assembly. The head assembly shall conform to drawing 12977468.

3.3.6 Head Loading Assembly. The head loading assembly shall conform to drawing 12977467.

3.3.7 Tube, Paper. The paper tube shall conform to drawing 12977478.

3.3.8 Body. The body shall conform to drawing 12977473.

3.3.9 Body Loading Assembly. The body loading assembly shall conform to drawing 12977472.

3.3.10 Cap. The cap shall conform to drawing 12977480.

3.3.11 Tube, Flash. The flash tube shall conform to drawing 12977475.

3.3.12 Pin. The pin shall conform to drawing 12989962.

3.3.13 Flash Tube Assembly. The flash tube assembly shall conform to drawing 12977474.

3.3.14 Tube Assembly. The tube assembly shall conform to drawing 12977477.

3.3.15 Flash Tube Seal Fitting. The flash tube assembly shall conform to drawing 13000846.

3.3.16 Cartridge, Ignition, M1020. The M1020 ignition cartridge shall conform to drawing 12977364.

3.3.17 Primer, Fed 150. The Fed 150 primer shall conform to drawing 12977240.

3.4 Moisture content of black powder. The moisture content of the black powder pellets used in loading the ignition cartridge shall not exceed 0.50 percent at the time of loading.

3.5 Primer testing.

3.5.1 Non-functioning sensitivity. The primer shall not function under an applied energy value of 4.5 inch ounces minimum (min.) using a 2.95 pound ball.

Downloaded from http://www.everyspec.com

3.5.2 Functioning sensitivity. The primer shall be accepted if the following requirement is satisfied:

$$\frac{2.88-\mu}{\sqrt{0.25+\sigma^2}} \geq 3.21$$

Where:

μ = Mean impact velocity calculated in 4.5.2.2
σ = Standard Deviation calculated in 4.5.2.2

3.5.3 Ignition Cartridge function with primer (safety drop test). The primer shall not function as a result of the 1.98 meter (m) cartridge drop.

3.6 Velocity, functioning and security (proving ground test). The rounds shall be fired from a M120 121mm mortar, on a hard mount, at an elevation of 45 degrees (800 mils) to minimize ballistic differences in ammunition performance imposed by various soil conditions.

3.6.1 Misfires. The ignition cartridges shall function on the first attempt.

3.6.2 Velocity and functioning (proving ground). The cartridge assemblies shall function and shall impart a corrected mean muzzle velocity as specified in Table I. In addition, the velocity standard deviation of the lot shall not be greater than 1.0 mps.

Table I. Mean velocity Requirements

Cartridge	Cartridge Weight	Velocity (max) (Para 3.6.2)	Velocity (min) (Para 3.6.2)	Uniformity Velocity (Para 3.7)
M934A1	30.09 ± 0.02 lbs	102.0 mps	100.0 mps	101.0 mps

3.6.3 Metal part security. There shall be no evidence of rupture or metal parts separation in the gun bore or in flight.

3.7 Propellant charge uniformity. The M48 propellant lots shall achieve a velocity as specified in Table I. This test shall be required for all M48 propellant lots and when a lapse of two years or more occurs between propellant acceptance and production.

3.8 Propellant and assembly weights.

3.8.1 Propellant weight. The propellant weight shall comply with the weight specified in the loading authorization within plus or minus 0.5 gram.

3.8.2 Assembly weight. The weight of the ignition cartridge after assembly of the cap and immediately prior to packout will not differ by more than 1.0 gram from the total assembly weight. Total assembly weight is defined as the weight specified in the loading authorization

Downloaded from http://www.everyspec.com

plus the actual weight of the ignition cartridge prior to filling with propellant plus the average weight of the RTV sealant around the cap plus the average or actual weight of the cap.

3.9 Excessive pressure on fin boom (static pressure). The average internal pressure of the ignition cartridges plus four standard deviations shall not exceed 14,200 psi.

3.10 Bursting strength. The tube shall not burst at a compression load of 57 pounds, minimum, but shall burst at a compression load of 192 pounds, maximum.

3.11 Check for deterioration of ignition cartridge. If the total elapsed time between original acceptance of the ignition cartridge lot and assembly of that lot into the complete round exceeds two years, or if the ignition cartridges were subjected to adverse conditions for any period of time since previous tests, the ignition cartridges shall be subjected to, and must satisfactorily comply with the test as specified in 4.5.9 before the ignition cartridges are assembled into complete rounds.

3.12 Workmanship. All parts and assemblies shall be fabricated and loaded in a thorough workmanlike manner. They shall be free of burrs, sharp edges, cracks, dirt, rust and other foreign matter. The cleaning method used shall not be injurious to any part nor shall parts be contaminated by the cleaning agent. All required markings should be neat and sharply defined.

Downloaded from http://www.everyspec.com

4- VERIFICATION

TABLE II. Requirements/verification cross reference matrix

METHOD OF VERIFICATION						CLASSES OF VERIFICATION		
1-Analysis 2-Demonstration 3-Examination 4-Test						A- First Article B- Conformance		
Section Requirement	Description	Verification Method				Verification Class		Section 4 Verification
		1	2	3	4	A	B	
3.1	First Article			X	X	X		4.2
3.2	Corrosion resistance			X		X	X	4.5.8
3.3.1	Pellet			X	X	X	X	4.4.2.1
3.3.2	O-ring, Firing Plug			X		X	X	4.4.2.2
3.3.3	Plug, Firing			X		X	X	4.4.2.3
3.3.4	Head			X		X	X	4.4.2.4
3.3.5	Head Assembly			X		X	X	4.4.2.5
3.3.6	Head Loading Assembly			X		X	X	4.4.2.15
3.3.7	Paper Tube			X		X	X	4.4.2.6
3.3.8	Body			X		X	X	4.4.2.7
3.3.9	Body Loading Assembly			X		X	X	4.4.2.14
3.3.10	Cap			X		X	X	4.4.2.8
3.3.11	Tube, Flash			X		X	X	4.4.2.9
3.3.12	Pin			X		X	X	4.4.2.10
3.3.13	Flash Tube Assembly			X		X	X	4.4.2.11
3.3.14	Tube Assembly			X		X	X	4.4.2.12
3.3.15	Flash tube seal fitting			X		X	X	4.4.2.13
3.3.16	Cartridge, Ignition Prior to Filling with Propellant			X		X	X	4.4.2.16
3.3.16	Cartridge, Ignition, Prior to Assembly of Cap			X		X	X	4.4.2.17
3.3.16	Cartridge, Ignition, after Assembly of Cap			X		X	X	4.4.2.18
3.3.17	Primer, Fed 150			X		X	X	4.4.2.19

Downloaded from http://www.everyspec.com

TABLE II. Requirements/verification cross reference matrix - Continued

METHOD OF VERIFICATION	CLASSES OF VERIFICATION
1-Analysis 2-Demonstration 3-Examination 4-Test	A- First Article B- Conformance

Section Requirement	Description	Verification Method				Verification Class		Section 4 Verification
		1	2	3	4	A	B	
3.4	Moisture content of black powder			X	X	X	X	4.5.1
3.5	Primer testing			X	X	X	X	4.5.2
3.5.1	Non-functioning Sensitivity			X	X	X	X	4.5.2.1
3.5.2	Functioning Sensitivity			X	X	X	X	4.5.2.2
3.5.3	Ignition cartridge function with primer (safety drop test)			X	X	X	X	4.5.2.3
3.6	Velocity, functioning and security (proving ground test)			X	X	X	X	4.5.4
3.6.1	Misfire			X	X	X	X	4.5.4
3.6.2	Velocity and functioning (proving ground)			X	X	X	X	4.5.4
3.6.3	Metal part security			X	X	X	X	4.5.4
3.7	Propellant charge uniformity				X			4.5.5
3.8.1	Propellant Weight			X	X	X	X	4.5.3.1
3.8.2	Assembly Weight			X	X	X	X	4.5.3.2-4.5.3.4
3.9	Excessive pressure on fin boom (Static pressure)			X	X	X	X	4.5.6
3.10	Bursting strength			X	X	X	X	4.5.7
3.11	Check test for deterioration of ignition cartridge			X	X		X	4.5.9
3.12	Workmanship			X	X	X	X	4.4.2.1-4.4.2.19

Downloaded from http://www.everyspec.com

4.1 Classification of inspections. The inspection requirements specified herein are classified as follows:

a. First article inspection (see 4.2).

b. Conformance inspection (see 4.4).

4.2 First article. When specified, a sample shall be subjected to first article verification in accordance with Table III.

4.2.1 First article quantity. First article inspection shall be performed on the quantities listed in Table III.

4.2.2 Verification to be performed. The first article inspection shall be performed in accordance with Table III.

Downloaded from http://www.everyspec.com

TABLE III. First Article inspection

CLASSIFICATION	EXAMINATION OR TEST	CONFORMANCE CRITERIA	REQUIREMENT PARAGRAPH	INSPECTION METHOD REFERENCE
	Pellet (Dwg. 13000847)			
	Examination for defects	25	3.3.1	4.4.2.1
	O-ring, Firing Plug (Dwg. 12977471)			
	Examination for defects	25	3.3.2	4.4.2.2
	Plug, Firing (Dwg. 12977470)			
	Examination for defects	25	3.3.3	4.4.2.3
	Head (Dwg. 12977469)			
	Examination for defects	25	3.3.4	4.4.2.4
	Salt spray test	25	3.2	4.5.8
	Head Assembly (Dwg. 12977468)			
	Examination of defects	25	3.3.5	4.4.2.5
	Tube, Paper (Dwg. 12977478)			
	Examination for defects	25 1/	3.3.7	4.4.2.6
	Bursting strength	25 1/	3.10	4.5.7
	Body (Dwg. 12977473)			
	Examination for defects	25	3.3.8	4.4.2.7
	Salt spray test	25	3.2	4.5.8
	Cap (Dwg. 12977480)			
	Examination for defects	25	3.3.10	4.4.2.8
	Tube, Flash (Dwg. 12977475)			
	Examination for defects	25	3.3.11	4.4.2.9
	Salt spray test	25	3.2	4.5.8
	Pin (Dwg. 12989962)			
	Examination for defects	25	3.3.12	4.4.2.10
	Flash Tube Assembly (Dwg. 12977474)			
	Examination for defects	25	3.3.13	4.4.2.11
	Tube Assembly (Dwg. 12977477)			
	Examination for defects	25	3.3.14	4.4.2.12

Notes: 1/ The same samples submitted for examination shall be used for the burst test.

Downloaded from http://www.everyspec.com

TABLE III. First Article inspection - Continued

CLASSIFICATION	EXAMINATION OR TEST	CONFORMANCE CRITERIA	REQUIREMENT PARAGRAPH	INSPECTION METHOD REFERENCE
	Flash tube seal fitting (Dwg. 13000846)			
	Examination for defects	25	3.3.15	4.4.2.13
	Salt spray test	25	3.2	4.5.8
	Body Loading Assembly (Dwg. 12977472)			
	Examination for defects	25	3.3.9	4.4.2.14
	Head Loading Assembly (Dwg. 12977467)			
	Examination for defects	25	3.3.6	4.4.2.15
	Non-functioning sensitivity	200	3.5.1	4.5.2.1
	Functioning sensitivity	500	3.5.2	4.5.2.2
	Cartridge, Ignition Prior to Filling with Propellant (Dwg. 12977364)			
	Examination for defects	25	3.3.16	4.4.2.16
	Moisture content	10	3.4	4.5.1
	Ignition cartridge function with primer	25	3.5.3	4.5.2.3
	Cartridge, Ignition, Prior to Assembly of Cap (Dwg. 12977364)			
	Examination of defects	25	3.3.16	4.4.2.17
	Cartridge, Ignition, After Assembly of Cap (Dwg. 12977364)			
	Examination for defects	25	3.3.16	4.4.2.18
	Excessive pressure on fin boom	25 2/	3.9	4.5.6
	Proving ground test	50	3.6	4.5.4
	Primer, Fed 150 (Dwg. 12977240)			
	Examination for defects	25	3.3.17	4.4.2.19

NOTES: 2/ Static pressure test is required for each propellant lot.

Downloaded from http://www.everyspec.com

4.3 First article rejection. If any assembly, component or test specimen fails to comply with Table III requirements, the first article sample shall be rejected. The first article ballistic test shall be:

a. Rejected if the mean velocity exceeds the uniformity velocity by ± 3 mps.

b. Referred if the mean velocity exceeds the uniformity velocity by ± 1mps to ± 3 mps

c. Rejected if the velocity standard deviation exceeds the requirement.

d. Rejected if one or more misfires attributable to the ignition cartridge occur.

e. Rejected if one or more metal part separations attributable to the ignition cartridge occur.

4.4 Conformance inspection.

4.4.1 Inspection lot formation. Lot formation shall be in accordance with paragraph 4.2.2 of MIL-STD-1916. Lot numbering shall be in accordance with MIL-STD-1168. In addition, each inspection lot of ignition cartridges shall be produced with components complying with the following constraints:

a. Metal parts from one lot interfix, from one manufacturer.

b. Black powder pellets from one lot interfix, from one manufacturer.

c. M48 propellant from not more than one lot, from one manufacturer.

d. Fed 150 primers from not more than one lot, from one manufacturer.

e. Pressure sensitive tape from not more than one manufacturer.

f. Adhesive sealant from not more than one manufacturer.

4.4.2 Classification of characteristics.

a. Sampling requirements. Inspection sampling requirements for critical, major and minor characteristics are defined in MIL-STD-1916. Unless specified otherwise, Inspection Level IV shall be used for all characteristics defined as Majors and Inspection Level II for all Minor characteristics; Critical characteristics shall be addressed in accordance with MIL-STD-1916 (see 6.9).

b. Conformance inspection. Conformance inspection shall be performed in accordance with paragraph 4.4.2.1 through 4.4.2.19. For all conformance inspections the same sample specimen may be used for all non-destructive examinations or tests.

Downloaded from http://www.everyspec.com

Conformance inspection by classification of characteristics

PARAGRAPH 4.4.2.1	TITLE Pellet	SHEET 1 OF 1		DRAWING NUMBER 13000847 NEXT HIGHER ASSEMBLY 12977467
CLASSIFICATION	EXAMINATION OR TEST	CONFORMANCE CRITERIA	REQUIREMENT PARAGRAPH	INSPECTION METHOD REFERENCE
Critical	None defined			
Major				
101	Weight of pellet	VL-IV	3.3.1	Balance
102	Outside diameter	VL-IV	3.3.1	Gage
103	Inside diameter	VL-IV	3.3.1	Gage
104	Length	VL-IV	3.3.1	Gage
105	Pellet chipped or cracked	VL-IV	3.3.1	Visual
Minor				
201	Evidence of poor workmanship	VL-II	3.12	Visual
Notes:				

PARAGRAPH 4.4.2.2	TITLE O-Ring, Firing Plug	SHEET 1 OF 1		DRAWING NUMBER 12977471 NEXT HIGHER ASSEMBLY 12977468
CLASSIFICATION	EXAMINATION OR TEST	CONFORMANCE CRITERIA	REQUIREMENT PARAGRAPH	INSPECTION METHOD REFERENCE
Critical	None defined			
Major				
101	Inner Diameter	VL-IV	3.3.2	Gage
102	Cross-sectional diameter	VL-IV	3.3.2	Gage
103	Composition	1/	3.3.2	Analysis
104	Presence of flash or cracks	VL-IV	3.3.2	Visual
Minor				
201	Evidence of poor workmanship	VL-II	3.12	Visual
Notes: 1/ The supplier (s) shall provide the material certification with each delivered lot.				

Downloaded from http://www.everyspec.com

Conformance inspection by classification of characteristics

PARAGRAPH 4.4.2.3	TITLE Plug, Firing	SHEET 1 OF 1		DRAWING NUMBER 12977470 NEXT HIGHER ASSEMBLY 12977468
CLASSIFICATION	EXAMINATION OR TEST	CONFORMANCE CRITERIA	REQUIREMENT PARAGRAPH	INSPECTION METHOD REFERENCE
Critical	None defined			
Major				
101	Length of tip to second largest diameter	VL-IV	3.3.3	Gage
102	Total length including tip	VL-IV	3.3.3	Gage
103	Length of tip	VL-IV	3.3.3	Gage
104	Radius of the tip	VL-IV	3.3.3	Gage
105	Large outside diameter	VL-IV	3.3.3	Gage
106	Small outside diameter	VL-IV	3.3.3	Gage
107	Protective finish missing	VL-IV	3.3.3	Visual
108	Chamfer missing or incorrect	VL-IV	3.3.3	Gage
109	True position of tip with large outside diameter	VL-IV	3.3.3	Gage
110	Shoulder length from the small outside diameter to o-ring diameter	VL-IV	3.3.3	Gage
111	Width of groove for o-ring	VL-IV	3.3.3	Gage
112	Diameter of o-ring groove (smallest diameter)	VL-IV	3.3.3	Gage
113	Evidence of burrs, nibs, and/or depressions	VL-IV	3.3.3	Visual
114	True position of small OD to large OD	VL-IV	3.3.3	Gage
Minor				
201	Surface finish improper	VL-II	3.3.3	Visual
202	Evidence of poor workmanship	VL-II	3.12	Visual
Notes:				

Downloaded from http://www.everyspec.com

Conformance inspection by classification of characteristics

PARAGRAPH 4.4.2.4	TITLE Head	SHEET 1 OF 2		DRAWING NUMBER 12977469 NEXT HIGHER ASSEMBLY 12977468
CLASSIFICATION	EXAMINATION OR TEST	CONFORMANCE CRITERIA	REQUIREMENT PARAGRAPH	INSPECTION METHOD REFERENCE
Critical	None defined			
Major				
101	Pitch diameter of internal threads	VL-IV	3.3.4	Gage
102	Minor diameter of internal threads	VL-IV	3.3.4	Gage
103	Pitch diameter of external threads	VL-IV	3.3.4	Gage
104	Major diameter of external threads	VL-IV	3.3.4	Gage
105	Length of internal thread, min.	VL-IV	3.3.4	Gage
106	Thickness of rear flange	VL-IV	3.3.4	Gage
107	Diameter of firing plug cavity (forward end)	VL-IV	3.3.4	Gage
108	Diameter of firing plug cavity (aft end)	VL-IV	3.3.4	Gage
109	Large outside diameter	VL-IV	3.3.4	Gage
110	OD of rear flange and surface rear of tube assembly shoulder	VL-IV	3.3.4	Gage
111	Diameter of cavity forward of internal threads	VL-IV	3.3.4	Gage
112	True position of rear flange to PD of external thread	VL-IV	3.3.4	Gage
113	True position of firing plug cavity (forward end) with P.D. of external thread	VL-IV	3.3.4	Gage
114	Presence of burrs in threads	VL-IV	3.3.4	Visual
115	Length from rear face to end of external threads	VL-IV	3.3.4	Gage
116	Protective finish missing	VL-IV	3.3.4	Visual
117	Salt spray test	25	3.2	4.5.8
118	Diameter of spanner holes	VL-IV	3.3.4	Gage
119	True position of spanner holes with firing plug cavity (forward end)	VL-IV	3.3.4	Gage
120	Distance from rear face to firing plug shoulder	VL-IV	3.3.4	Gage
121	Distance from front face to fin shoulder	VL-IV	3.3.4	Gage
122	Distance from rear face to tube assembly shoulder	VL-IV	3.3.4	Gage
123	True position of cavity forward of internal thread with firing plug cavity (forward end)	VL-IV	3.3.4	Gage
124	True position of firing plug cavity (rear end) with firing plug cavity (forward end)	VL-IV	3.3.4	Gage

Notes:

Downloaded from http://www.everyspec.com

Conformance inspection by classification of characteristics

PARAGRAPH 4.4.2.4	TITLE Head (continued)	SHEET 2 OF 2		DRAWING NUMBER 12977469 NEXT HIGHER ASSEMBLY 12977468
CLASSIFICATION	EXAMINATION OR TEST	CONFORMANCE CRITERIA	REQUIREMENT PARAGRAPH	INSPECTION METHOD REFERENCE
Minor				
201	Depth of spanner holes	VL-II	3.3.4	Gage
202	Width of RTV groove	VL-II	3.3.4	Gage
203	Diameter of undercut forward of external thread	VL-II	3.3.4	Gage
204	Diameter of RTV groove (forward of rear flange)	VL-II	3.3.4	Gage
205	Chamfer missing, incomplete or incorrect	VL-II	3.3.4	Gage
206	Surface finish improper	VL-II	3.3.4	Visual
207	Evidence of poor workmanship	VL-II	3.12	Visual
Notes:				

PARAGRAPH 4.4.2.5	TITLE Head assembly	SHEET 1 OF 1		DRAWING NUMBER 12977468 NEXT HIGHER ASSEMBLY 12977467
CLASSIFICATION	EXAMINATION OR TEST	CONFORMANCE CRITERIA	REQUIREMENT PARAGRAPH	INSPECTION METHOD REFERENCE
Critical	None defined			
Major				
101	O-ring missing or not fully seated	VL-IV 1/	3.3.5	Visual
102	O-ring not lubricated	VL-IV 1/	3.3.5	Visual
103	Firing plug improperly positioned	100% 2/	3.3.5	Visual
Minor				
201	Evidence of Poor workmanship	VL-II	3.12	Visual
Notes: 1/ Inspections shall be performed prior to insertion into the head. 2/ Firing plug with o-ring must be seated flush to the head with o-ring properly seated in the groove after assembly				

Downloaded from http://www.everyspec.com

Conformance inspection by classification of characteristics

PARAGRAPH 4.4.2.6	TITLE Tube, Paper	SHEET 1 OF 1		DRAWING NUMBER 12977478 NEXT HIGHER ASSEMBLY 12977477
CLASSIFICATION	EXAMINATION OR TEST	CONFORMANCE CRITERIA	REQUIREMENT PARAGRAPH	INSPECTION METHOD REFERENCE
Critical	None defined			
Major				
101	Thickness	VL-IV	3.3.7	Gage
102	Length	VL-IV	3.3.7	Gage
103	Inside diameter	VL-IV	3.3.7	Gage
104	Tube not spiral wound	5	3.3.7	Visual
105	Burst strength	25	3.10	4.5.7
Minor				
201	Evidence of poor workmanship	VL-II	3.12	Visual
Notes:				

Downloaded from http://www.everyspec.com

Conformance inspection by classification of characteristics

PARAGRAPH 4.4.2.7	TITLE Body	SHEET 1 OF 2		DRAWING NUMBER 12977473 NEXT HIGHER ASSEMBLY 12977472
CLASSIFICATION	EXAMINATION OR TEST	CONFORMANCE CRITERIA	REQUIREMENT PARAGRAPH	INSPECTION METHOD REFERENCE
Critical				
1	Flash hole missing or obstructed	100%	3.3.8	Gage
Major				
101	Pitch diameter of external threads, min.	VL-IV	3.3.8	Gage
102	Major diameter of external threads, min.	VL-IV	3.3.8	Gage
103	Diameter of flash hole forward of primer cavity	VL-IV	3.3.8	Gage
104	Depth of primer cavity	VL-IV	3.3.8	Gage
105	Depth of flash tube cavity	VL-IV	3.3.8	Gage
106	Diameter of flash tube cavity	VL-IV	3.3.8	Gage
107	Diameter of primer cavity	VL-IV	3.3.8	Gage
108	Large outside diameter	VL-IV	3.3.8	Gage
109	Length overall	VL-IV	3.3.8	Gage
110	True position of primer cavity with pitch diameter of external threads	VL-IV	3.3.8	Gage
111	Diameter of countersink at base of primer cavity, max.	VL-IV	3.3.8	Gage
112	Length from rear face to head shoulder	VL-IV	3.3.8	Gage
113	Outside diameter forward and rear of external threads	VL-IV	3.3.8	Gage
114	Length from rear face to external threads	VL-IV	3.3.8	Gage
115	Protective finish missing or inadequate	VL-IV	3.3.8	Visual
116	Radius, max. at the base of primer cavity	VL-IV	3.3.8	Gage
117	Salt spray	25	3.2	4.5.8
118	Length of external threads	VL-IV	3.3.8	Gage
119	Pitch diameter of seal fitting cavity thread	VL-IV	3.3.8	Gage
120	Minor diameter of seal fitting cavity thread	VL-IV	3.3.8	Gage
121	Length of seal fitting cavity threaded area	VL-IV	3.3.8	Gage
122	Diameter of seal fitting cavity counterbore	VL-IV	3.3.8	Gage
123	Depth of seal fitting cavity	VL-IV	3.3.8	Gage
124	Presence of burrs in threads	VL-IV	3.3.8	Visual

Notes:

Downloaded from http://www.everyspec.com

Conformance inspection by classification of characteristics

PARAGRAPH 4.4.2.7	TITLE Body (continued)	SHEET 2 OF 2		DRAWING NUMBER 12977473 NEXT HIGHER ASSEMBLY 12977472
CLASSIFICATION	EXAMINATION OR TEST	CONFORMANCE CRITERIA	REQUIREMENT PARAGRAPH	INSPECTION METHOD REFERENCE
Minor				
201	Radii or chamfers missing or incorrect	VL-II	3.3.8	Gage
202	Width of slot on forward face	VL-II	3.3.8	Gage
203	Depth of slot on forward face	VL-II	3.3.8	Gage
204	Diameter of spanner holes (alt design)	VL-II	3.3.8	Gage
205	Depth of spanner holes (alt design)	VL-II	3.3.8	Gage
206	Location of spanner holes (alt design)	VL-II	3.3.8	Gage
207	Surface finish improper	VL-II	3.3.8	Visual
208	Evidence of poor workmanship	VL-II	3.12	Visual
Notes:				

PARAGRAPH 4.4.2.8	TITLE Cap	SHEET 1 OF 1		DRAWING NUMBER 12977480 NEXT HIGHER ASSEMBLY 12977364
CLASSIFICATION	EXAMINATION OR TEST	CONFORMANCE CRITERIA	REQUIREMENT PARAGRAPH	INSPECTION METHOD REFERENCE
Critical	None defined			
Major				
101	Flange outside diameter (OD)	VL-IV	3.3.10	Gage
102	Total length	VL-IV	3.3.10	Gage
103	Diameter of cavity	VL-IV	3.3.10	Gage
104	Depth of cavity	VL-IV	3.3.10	Gage
105	Protective finish missing or inadequate	VL-IV	3.3.10	Visual
106	Thickness of flange	VL-IV	3.3.10	Gage
107	Depth from flange OD to Cap OD	VL-IV	3.3.10	Gage
Minor				
201	Chamfers missing or improper	VL-II	3.3.10	Visual
202	Surface finish improper	VL-II	3.3.10	Visual
203	Evidence of poor workmanship	VL-II	3.12	Visual
Notes:				

Downloaded from http://www.everyspec.com

Conformance inspection by classification of characteristics

PARAGRAPH 4.4.2.9	TITLE Tube, Flash	SHEET 1 OF 1		DRAWING NUMBER 12977475 NEXT HIGHER ASSEMBLY 12977474
CLASSIFICATION	EXAMINATION OR TEST	CONFORMANCE CRITERIA	REQUIREMENT PARAGRAPH	INSPECTION METHOD REFERENCE
Critical				
1	Longitudinal flash hole missing or obstructed	100%	3.3.11	Visual
2	Flash hole(s) missing, excessive in number or obstructed	100%	3.3.11	Visual
Major				
101	True position of flash holes to forward outside diameter and rear face	VL-IV	3.3.11	Gage
102	Diameter of flash holes	VL-IV	3.3.11	Gage
103	Overall length	VL-IV	3.3.11	Gage
104	Outside diameter	VL-IV	3.3.11	Gage
105	Inside diameter at pin end	VL-IV	3.3.11	Gage
106	Inside diameter at pellet end	VL-IV	3.3.11	Gage
107	Length of pin cavity	VL-IV	3.3.11	Gage
108	Length of pellet cavity	VL-IV	3.3.11	Gage
109	Protective finish missing or inadequate	VL-IV	3.3.11	Visual
110	Wall thickness	VL-IV 1/	3.3.11	Gage
111	Salt spray	25	3.2	4.5.8
Minor				
201	Surface finish improper	VL-II	3.3.11	Visual
202	Evidence of poor workmanship	VL-II	3.12	Visual

Notes: 1/ This inspection shall be conducted prior to machining both ends of the flash tube.

Downloaded from http://www.everyspec.com

Conformance inspection by classification of characteristics

PARAGRAPH 4.4.2.10	TITLE Pin	SHEET 1 OF 1		DRAWING NUMBER 12989962 NEXT HIGHER ASSEMBLY 12977474
CLASSIFICATION	EXAMINATION OR TEST	CONFORMANCE CRITERIA	REQUIREMENT PARAGRAPH	INSPECTION METHOD REFERENCE
Critical	None defined			
Major				
101	Length	VL-IV	3.3.12	Gage
102	Outside Diameter	VL-IV	3.3.12	Gage
Minor				
201	Evidence of poor workmanship	VL-II	3.12	Visual
Notes:				

PARAGRAPH 4.4.2.11	TITLE Flash Tube Assembly	SHEET 1 OF 1		DRAWING NUMBER 12977474 NEXT HIGHER ASSEMBLY 12977467
CLASSIFICATION	EXAMINATION OR TEST	CONFORMANCE CRITERIA	REQUIREMENT PARAGRAPH	INSPECTION METHOD REFERENCE
Critical				
1	Pressure sensitive tape missing, loose, or does not completely cover all flash holes	100%	3.3.13	Visual
2	Pin missing	100%	3.3.13	Visual
Major				
101	Pin not flush or below edge of flash tube	VL-IV	3.3.13	Gage
102	Pressure sensitive tape overlap, max.	VL-IV	3.3.13	Visual
Minor				
201	Evidence of poor workmanship	VL-II	3.12	Visual
Notes:				

Downloaded from http://www.everyspec.com

Conformance inspection by classification of characteristics

PARAGRAPH 4.4.2.12	TITLE Tube Assembly	SHEET 1 OF 1		DRAWING NUMBER 12977477 NEXT HIGHER ASSEMBLY 12977364
CLASSIFICATION	EXAMINATION OR TEST	CONFORMANCE CRITERIA	REQUIREMENT PARAGRAPH	INSPECTION METHOD REFERENCE
Critical	None defined			
Major 101	Pressure sensitive tape missing, loose, wrinkled, separating or inadequately covering external surface	VL-IV	3.3.14	Visual-Manual
Minor 201	Evidence of poor workmanship	VL-II	3.12	Visual
Notes:				

Downloaded from http://www.everyspec.com

Conformance inspection by classification of characteristics

PARAGRAPH 4.4.2.13	TITLE Flash Tube Seal Fitting	SHEET 1 OF 1		DRAWING NUMBER 13000846 NEXT HIGHER ASSEMBLY 12977467
CLASSIFICATION	EXAMINATION OR TEST	CONFORMANCE CRITERIA	REQUIREMENT PARAGRAPH	INSPECTION METHOD REFERENCE
Critical	None defined			
Major				
101	Through hole diameter	VL-IV	3.3.15	Gage
102	True position of spanner holes	VL-IV	3.3.15	Gage
103	Outside diameter of aft end	VL-IV	3.3.15	Gage
104	Large outside diameter	VL-IV	3.3.15	Gage
105	Length from shoulder to aft end	VL-IV	3.3.15	Gage
106	Major diameter of thread	VL-IV	3.3.15	Gage
107	Pitch diameter of threads	VL-IV	3.3.15	Gage
108	Overall Length	VL-IV	3.3.15	Gage
109	Salt spray	25	3.2	4.5.8
110	Minimum effective thread	VL-IV	3.3.15	Gage
111	Protective finish missing or inadequate	VL-IV	3.3.15	Visual
Minor				
201	Depth of spanner holes	VL-II	3.3.15	Gage
202	Surface finish improper	VL-II	3.3.15	Visual
203	Evidence of poor workmanship	VL-II	3.12	Visual
Notes:				

Downloaded from http://www.everyspec.com

Conformance inspection by classification of characteristics

PARAGRAPH 4.4.2.14	TITLE Body Loading Assembly	SHEET 1 OF 1		DRAWING NUMBER 12977472 NEXT HIGHER ASSEMBLY 12977467
CLASSIFICATION	EXAMINATION OR TEST	CONFORMANCE CRITERIA	REQUIREMENT PARAGRAPH	INSPECTION METHOD REFERENCE
Critical	None defined			
Major				
101	Primer missing or inverted	100%	3.3.9	Visual
102	Primer not in proper position	VL-IV	3.3.9	Gage
103	Crimp missing or incomplete	VL-IV	3.3.9	Visual
Minor				
201	Evidence of poor workmanship	VL-II	3.12	Visual
Notes:				

Downloaded from http://www.everyspec.com

Conformance inspection by classification of characteristics

PARAGRAPH 4.4.2.15	TITLE Head Loading Assembly	SHEET 1 OF 1		DRAWING NUMBER 12977467 NEXT HIGHER ASSEMBLY 12977364
CLASSIFICATION	EXAMINATION OR TEST	CONFORMANCE CRITERIA	REQUIREMENT PARAGRAPH	INSPECTION METHOD REFERENCE
Critical				
1	Non-functioning sensitivity	200/125 1/	3.5.1	4.5.2.1
2	Firing plug above flush with head surface	100%	3.3.6	Gage
Major				
101	Body not fully assembled to head	VL-IV	3.3.6	Visual
102	Body and head improperly staked (4 places)	VL-IV	3.3.6	Visual
103	Pellet moisture content	25/shift	3.4	4.5.1
104	Pellet missing, broken or chipped	100% 2/	3.3.6	Visual
105	Functioning sensitivity	500	3.5.2	4.5.2.2
106	O-ring missing	VL-IV	3.3.6	Visual
107	Flash tube seal fitting improperly torqued	VL-IV	3.3.6	Gage
108	Max length to forward end of flash tube assembly	VL-IV	3.3.6	Gage
109	Thread adhesive missing, inadequate, or excessive	VL-IV	3.3.6	Visual
110	Flash tube assembly missing	100%	3.3.6	Visual
Minor 201	Evidence of poor workmanship	VL-II	3.12	Visual

Notes: 1/ 200 Samples for First 3 consecutive lots, and 125 samples each additional lot (See 4.5.2.1 for details)
2/ Standards shall be established by the contractor during first article

Downloaded from http://www.everyspec.com

Conformance inspection by classification of characteristics

PARAGRAPH 4.4.2.16	TITLE Cartridge, Ignition Prior to Filling with Propellant	SHEET 1 OF 1		DRAWING NUMBER 12977364 NEXT HIGHER ASSEMBLY
CLASSIFICATION	EXAMINATION OR TEST	CONFORMANCE CRITERIA	REQUIREMENT PARAGRAPH	INSPECTION METHOD REFERENCE
Critical				
1	Ignition Cartridge function with Primer	25 1/	3.5.3	4.5.2.3
Major				
101	Presence of adhesive 360° in body groove prior to tube assembly	VL-IV	3.3.16	Visual
102	Tube assembly improperly seated on head	VL-IV	3.3.16	Visual
Minor				
201	Evidence of poor workmanship	VL-II	3.12	Visual

Notes: 1/ Ignition Cartridge function with Primer (Safety Drop test) will be performed per Primer Lot

PARAGRAPH 4.4.2.17	TITLE Cartridge, Ignition, Prior to Assembly of Cap	SHEET 1 OF 1		DRAWING NUMBER 12977364 NEXT HIGHER ASSEMBLY
CLASSIFICATION	EXAMINATION OR TEST	CONFORMANCE CRITERIA	REQUIREMENT PARAGRAPH	INSPECTION METHOD REFERENCE
Critical				
1	Flash tube assembly missing	100%	3.3.16	Gage
2	Propellant weight greater than 1 gram below lower limit or above upper limit (after loading)	100% 1/	3.8.1	4.5.3.1/4.5.3.2
Major				
101	Propellant weight 0.5 to 1.0 gram below lower limit or above upper limit (after loading)	100% 1/	3.8.1	4.5.3.1/4.5.3.2
102	Environmental conditions inadequate	2/	3.3.16	Gage
Minor				
201	Foreign matter in propellant	VL-II	3.3.16	Visual
202	Evidence of poor workmanship	VL-II	3.12	Visual

Notes:
1/ Same sample used for both inspections.
2/ Temperature and humidity shall be checked at the beginning and end of each shift. If conditions are not proper at either time, the quantity of product represented by the conditioning shall be rejected.

Downloaded from http://www.everyspec.com

Conformance inspection by classification of characteristics

PARAGRAPH 4.4.2.18	TITLE Cartridge, Ignition, After Assembly of Cap	SHEET 1 OF 1		DRAWING NUMBER 12977364 NEXT HIGHER ASSEMBLY
CLASSIFICATION	EXAMINATION OR TEST	CONFORMANCE CRITERIA	REQUIREMENT PARAGRAPH	INSPECTION METHOD REFERENCE
Critical				
1	Propellant Weight	315	3.8.1	4.5.3.3
2	Excessive Pressure on Fin boom	25 2/	3.9	4.5.6
3	Assembly improper or damaged to the extent that propellant can escape	100%	3.3	Visual-Manual
4	Teardown Inspection	4.4.3 3/	3.3/3.8	4.4.3/4.5.10
5	Gross Weight (Propellant missing)	100% 1/	3.8.2	4.5.3.4
Major				
101	Gross Weight (Propellant missing)	100% 1/	3.8.2	4.5.3.4
102	Channel not completely filled with RTV sealant	VL-IV	3.3.16	Visual
103	Cap cocked or not completely seated	VL-IV	3.3.16	Visual
104	Overall Length, max	VL-IV	3.3.16	Gage
105	Environmental conditions inadequate	4/	3.3.16	Gage
106	Presence of excessive sealant	VL-IV	3.3.16	Visual
107	Pellet broken or chipped	100%	3.3	4.5.11/4.5.12
108	Firing plug missing	100%	3.3	4.5.11/4.5.12
109	Primer missing	100%	3.3	4.5.11/4.5.12
110	Pellet missing	100%	3.3	4.5.11/4.5.12
Minor				
201	Marking missing, misleading or unidentifiable	VL-II	3.3.16	Visual
202	Evidence of poor workmanship	VL-II	3.12	Visual
	Proving Ground Test			
	Initial production	50	3.6	4.5.4
	Subsequent production	50/35	3.6	4.5.4

Notes:
1/ The rejected ignition cartridge shall be disassembled to verify the propellant weight. If the weight of the propellant is within critical tolerance, it will be classified as a Major, if not it will be classified as a Critical.
2/ Excessive Pressure on Fin Boom will be verified using a static pressure test fixture and should be conducted per propellant lot
3/ Category is Critical or Major dependent upon the inspection performed (see 4.5.10)
4/ Temperature and humidity shall be checked at the beginning and end of each shift. If conditions are not proper at either time, the quantity of product represented by the conditioning shall be rejected.

Downloaded from http://www.everyspec.com

Conformance inspection by classification of characteristics

PARAGRAPH 4.4.2.19	TITLE Primer, FED 150	SHEET 1 OF 1		DRAWING NUMBER 12977240 NEXT HIGHER ASSEMBLY 12977472
CLASSIFICATION	EXAMINATION OR TEST	CONFORMANCE CRITERIA	REQUIREMENT PARAGRAPH	INSPECTION METHOD REFERENCE
Critical	None defined			
Major 101	Height	100%	3.3.17	Gage
Minor 201	Evidence of poor workmanship	VL-II	3.12	Visual
Notes:				

Downloaded from http://www.everyspec.com

4.4.3 Teardown Inspection. Three (3) complete assembled ignition cartridges shall be randomly selected from each day's production beginning with the first day of production and continuing until three consecutive days have complied with applicable requirements (see 4.5.10). After three consecutive days of production have met the requirements, one sample shall be randomly selected.

4.4.4 Inspection equipment. The inspection equipment required to perform the inspections specified herein is identified in the "Inspection Method Reference" column of the Classification of Characteristics listings from 4.4.2.1 to 4.4.2.19. Designs which provide variable measurements instead of attributes data are preferred in order to facilitate the use of statistical process control. All Acceptance Inspection Equipment shall have an accuracy of 10% or better unless otherwise authorized by the Procuring Contracting Officer (See 6.3).

4.4.5 Automatic Inspection Equipment. Automatic test and inspection equipment, when utilized by the Contractor, shall be subjected to periodic verification and calibration check during production. Calibration and verification standards are required and shall initially be supplied by the equipment manufacturer as part of the equipment. Replacement standards will be fabricated and certified using designs and procedures provided by the equipment manufacturer and approved by the government. All standards or test samples required for such calibration/verification shall be furnished by the equipment manufacturer as part of the equipment. Procedures for verification shall include, as a minimum: frequency, method of verification and the method of retrieval of items produced between verification/calibration. These procedures shall be included in the operation/calibration procedures as required by the above paragraph. In addition, the equipment shall be subjected to periodic maintenance by the manufacturer or other qualified personnel in accordance with approved maintenance procedures.

4.5 Methods of inspection.

4.5.1 Moisture content of black powder. The procedures used for determining the moisture content of the black powder pellets shall be equivalent to that specified in MIL-P-00223. A sample of 5 each black powder pellets shall be selected prior to and after each production shift along with a sample of 15 black powder pellets selected randomly throughout each production shift. If any sample fails to comply with the requirement cited in paragraph 3.4, all pellets in the production shift represented by this sample shall be rejected. If loading with propellant has begun, ignition cartridges loaded with the non-conforming black powder pellets shall be rejected.

4.5.2 Primer testing.

4.5.2.1 Non-functioning sensitivity.

4.5.2.1.1 Initial production. Beginning with the first lot produced and continuing until three consecutive lots have complied with the acceptance criteria specified, 200 primed head assemblies shall be randomly selected from each lot for this test. If one or more cartridges fail to comply with the specified requirement, the lot shall be rejected. The test shall be performed as specified in 4.5.2.1.3.

Downloaded from http://www.everyspec.com

4.5.2.1.2 Consecutive production. After three consecutive lots have met the criteria of 4.5.2.1.1, 125 samples shall be tested using the same acceptance criteria. If a lot is rejected, revert to sampling plan per 4.5.2.1.1. The test shall be performed as specified in 4.5.2.1.3.

4.5.2.1.3 Test. The primed head assemblies shall be assembled to a suitable fixture. The firing pin of the test fixture shall be adjusted so that impact will be on the center of the firing plug of the assembly. A 2.95 pound steel ball (or approved equivalent) shall be dropped onto the firing pin from a height of .095 inches producing 4.5 inch ounces of energy (min.). The height of drop shall be measured as the height from the top of the firing pin to the bottom of the weight. Any primed head assemblies that function shall be classified defective. Samples used in this test shall not be returned to the lot.

4.5.2.2 Functioning sensitivity.

4.5.2.2.1 Sampling plan. A random sample of five hundred (500) primed head assemblies shall be selected from each lot for this test. The test shall be performed as specified in 4.5.2.2.2 using the Government's design test equipment or an approved alternate (See 4.4.4).

4.5.2.2.2 Test. The primed head assemblies shall be divided into ten (10) groups of fifty (50) each. When assembled in the Drop Test Fixture (12977160) a 25 + 0.2 pound steel weight shall be dropped on to the firing pin starting from a height of 0.1 inches. The height of the drop shall be increased by 0.05 inches after each group of fifty is tested and until the all fire height is reached. The "fire" and "no fire" events shall be recorded for each group (most lots do not require all ten (10) groups to reach all function height). The lot shall be rejected should the mean and standard deviation not meet the requirements of 3.5.2 when the data is processed utilizing the Maxlik program or if an all fire height is not reached after all 500 primed head assemblies have been tested.

4.5.2.3 Ignition Cartridge function with Primer (safety drop test).

4.5.2.3.1 Sampling plan. Twenty-five head loading assemblies (without flash tubes, black powder pellets or propellant) in accordance with Dwg. 12977467 shall be selected for first article testing. This test shall be performed only upon initial use of each primer lot. If one or more of the test samples function, the primer lot shall be rejected.

4.5.2.3.2 Test. The test assemblies shall be assembled into inert-loaded, standard 120mm cartridges (Weighed to 30.09 ± 0.02 lbs. for M934A1). Each cartridge shall be dropped twice from a height of 1.98m on a steel surface. For the first drop, the cartridge shall be in the base (fin) down orientation. For the second drop, the cartridge shall be in the nose (fuze) down orientation. The drop height shall be measured from the lowest point of the cartridge orientation to the top of the steel surface. Any test assembly which functions as a result of the drop shall be classified defective. All questionable test assemblies shall be downloaded to verify primer functioning or non-functioning. This test shall be performed only upon initial use of each primer lot. All components used for this test shall not be returned to their respective lots.

4.5.3 Weight of propellant.

Downloaded from http://www.everyspec.com

4.5.3.1 Propellant Weight. Prior to filling the ignition cartridge, the propellant shall be weighted or volumetrically dispensed and then check-weighted on a different scale. If performed manually, the check-weigh will be performed by another operator. Any propellant sample failing to meet the applicable requirements shall be classified defective and removed from the lot.

4.5.3.1.1 Automated method. An automated operation method can be performed using the 100 percent check-weighing operation with automated equipment and mandatory process controls. In such cases, process control plans in accordance with data item description DI-P1604 must be submitted to the technical agency for approval of the automated operations.

4.5.3.2 Ignition Cartridge Assembly Weight (prior to assembling the cap). The actual weight of the ignition cartridge assembly (without the cap) will be recorded (weight #1). The ignition cartridge assembly, immediately after the propellant is loaded and prior to the assembly of the cap, will be weighted and recorded (weight #2). The weight of the propellant shall be determined by subtracting the tare weight of the ignition cartridge assembly (weight #1) from the loaded ignition cartridge assembly weight (weight #2). Any propellant sample propellant failing to meet the applicable requirements shall be classified defective and removed from the lot.

4.5.3.3 Propellant Weight (after assembly of cap). Critical defect: More than 1.0 gram above assessed maximum weight. Critical defect: More than 1.0 gram below assessed minimum weight. Major defect: 0.5 to 1.0 gram above assessed maximum weight. Major defect: 0.5 to 1.0 gram below assessed minimum weight. 315 sample ignition cartridge assemblies shall be randomly selected from each lot for this test. If any sample exceeds the assessed maximum weight by more than 1.0 gram or if two or more samples exceed the assessed maximum weight by 0.5 to 1.0 gram, the lot shall be rejected. If any sample is under the assessed minimum weight by more than 1.0 gram or if two or more samples are under the assessed minimum weight by 0.5 to 1.0 gram, the lot shall be rejected. The propellant shall be removed from each ignition cartridge sample, placed on the pan of a precision or analytic balance and weighed. Alternatively, the ignition cartridge assembly may be weighed and reweighed after removal of the propellant: The weight of the propellant charge shall be determined by subtracting the weight of the empty ignition cartridge from the loaded (gross) weight. The weight of the propellant in each sample shall be determined to the nearest 0.5 gram.

4.5.3.4 Gross weight. The intent of this inspection is to verify presence of propellant in the ignition cartridge. The assembled ignition cartridge shall be weighed 100% prior to pack out. The mean gross weight shall be the average weight calculated by the contractor using a consecutive sample of 125 ignition cartridges, selected from a normal production run. The contractor shall submit the data used to calculate the mean gross weight to the responsible technical agency for approval prior to use. The gross weight of each ignition cartridge shall be within the mean $\pm$ 3 grams. Adjustment of the mean gross weight due to continuous SPC must be approved by the technical agency.

4.5.4 Velocity, functioning and security (proving ground test). The test shall be performed at a Government Proving Ground. The sample ignition cartridges shall be assembled

Downloaded from http://www.everyspec.com

into 120mm cartridges for which they were manufactured (live or inert loaded) with total cartridge weight as specified in Table I. The complete assembly, less propelling charges, shall be fired from an M121 120mm mortar, on a hard mount, at an elevation of 45 degrees (800 mils). Reference rounds shall be fired without propelling charges for the purpose of velocity correction (if deemed necessary by the testing agency). At least one reference round should be fired for every three test rounds. Individual velocities and individual chamber pressure shall be recorded for both reference and test rounds. Velocity and pressure standard deviations and arithmetic averages shall be calculated and recorded. Temperature of the day and time of firing shall also be recorded. The mortar tube shall be dry swabbed every 10 rounds counting warmer, spotter, test and reference rounds. In the event of a misfire, the suspect ignition cartridge shall not be disassembled by the proving ground but shall be forwarded to the responsible technical agency.

4.5.4.1 Ballistic Defect classifications. The following defect classifications apply to the ballistic testing:

a. Misfires, Major defect (3.6.1)

b. Metal part separation, Critical defect (3.6.3)

c. Mean velocity and standard deviation, Major defect (3.6.2).

4.5.4.2 Initial production. Beginning with the first lot produced and continuing until three consecutive lots have complied with the applicable requirements, a sample of 50 ignition cartridges shall be selected and tested as specified in 4.5.4. The lot shall be:

a. Rejected if the mean velocity exceeds exceeds the uniformity velocity by ± 3 mps

b. Referred if the mean velocity exceeds the uniformity velocity by ± 1mps to ± 3 mps

c. Rejected if the velocity standard deviation exceeds the requirement.

d. Rejected if one or more misfires attributable to the ignition cartridge occur.

e. Rejected if one or more metal part separations attributable to the ignition cartridge occur.

4.5.4.3 Subsequent production. After three consecutive lots have met the criteria of 4.5.4.2, a sample of 35 ignition cartridges shall be selected and tested. If a lot is rejected, the contractor shall revert to the sampling plan listed in 4.5.4.2. This test shall be performed as specified in 4.5.4. The lot shall be:

a. Rejected if the mean velocity exceeds exceeds the uniformity velocity by ± 3 mps

b. Referred if the mean velocity exceeds the uniformity velocity by ± 1mps to ± 3 mps

Downloaded from http://www.everyspec.com

c. Rejected if the velocity standard deviation exceeds the requirement.

d. Rejected if one or more misfires attributable to the ignition cartridge occur.

e. Rejected if one or more metal part separations attributable to the ignition cartridge occur.

4.5.4.4 Refiring. If for any reason the proving ground concludes that conditions have detrimentally affected the test results, additional ignition cartridges shall be tested.

4.5.5 Propellant charge uniformity. (To be conducted at a U.S. Government Proving Ground). Ten ignition cartridges shall be loaded at charge weight established during the propellant assessment in accordance with DTL14000008 with a tolerance of ± 0.5 grams. The sample ignition cartridges shall be assembled into 120mm cartridges for which they were manufactured (live or inert loaded) with total cartridge weight as specified in Table I. The rounds shall be conditioned at 70°F (± 2.5°F) for 24 hours prior to firing and shall be maintained at this temperature until fired. The rounds shall be fired from a M121 120mm mortar, on a hard mount, at an elevation of 45 degrees (800 mils). Reference rounds shall be fired alternately for velocity correction (if deemed necessary by the testing agency). The mortar tube shall be dry swabbed every 10 rounds counting warmer, spotter, test and reference rounds. The corrected velocities of the group shall be compared to the established charge velocity. If the corrected velocity of the test rounds exceeds 2% (two percent) of the expected muzzle velocity, use of the propellant lot shall be referred. Test results shall be forwarded to the technical agency for evaluation (see 6.5).

4.5.6 Excessive pressure on fin boom (Static pressure test).

4.5.6.1 Sampling plan. Twenty-five ignition cartridge assemblies in accordance with Dwg. 12977364 shall be selected for testing. This test shall be performed only upon initial use of each propellant lot. The lot shall be rejected if the test results fail to comply with the requirements.

4.5.6.2 Test. The static pressure test will be performed with equipment/fixtures in general conformance to the concept on Figure 1. The ignition cartridges shall be threaded into an 120mm fin and firmly seated. A 5.5 mm hole shall be drilled in the ignition cartridge tube through one flash hole in the sixth row of flash holes in the fin boom, counting from the ignition cartridge end. A pressure transducer, mounted to a collar (see Figure 2), shall be attached to the fin boom and positioned so that the transducer will be directly over the flash hole drilled in the ignition cartridge tube. The collar shall be positioned carefully to prevent restriction of venting from other flash holes in the boom. The assembly shall be set up as shown in Figure 1 and the transducer connected to a recorder. The ignition cartridge shall then be functioned and maximum pressure and pressure/time trace shall be recorded (see 3.9). Equipment design shall be submitted for approval (see 4.4.4).

Downloaded from http://www.everyspec.com

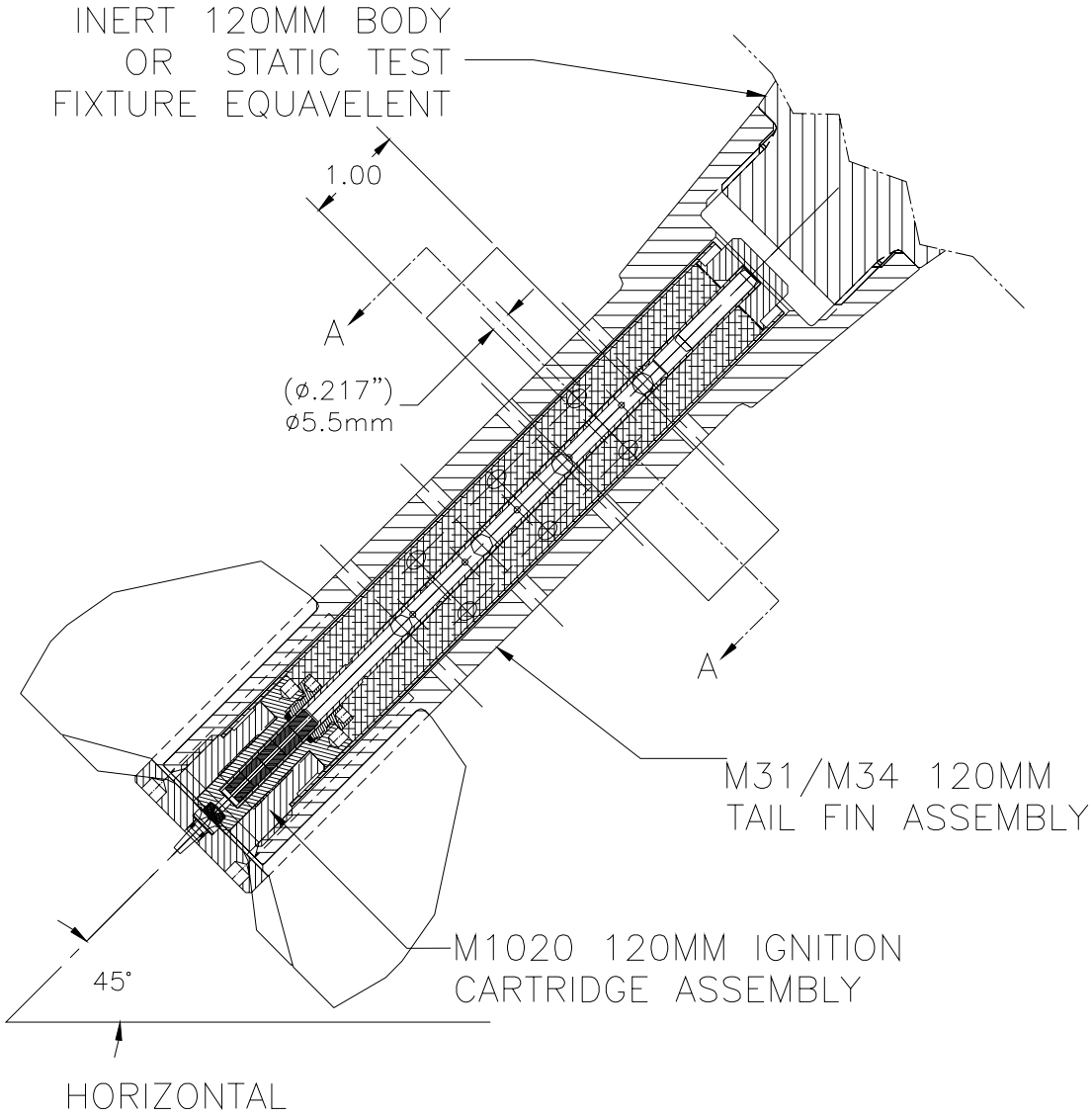

FIGURE 1. Static pressure test setup for ignition cartridge

Downloaded from http://www.everyspec.com

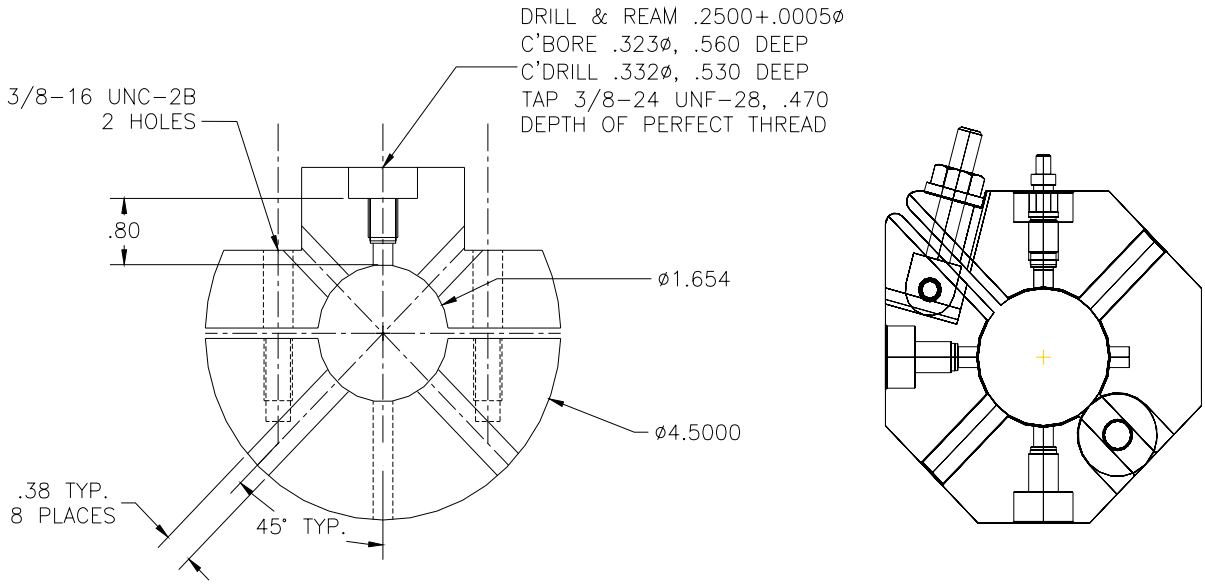

FIGURE 2. Sample dimensions of the collar and collar design

4.5.7 Bursting strength. The paper tube shall be cut in half lengthwise and one of the halves placed in the fixture (see Figure 3-1, 3-2, 3-3). The stop (3) shall be completely removed or backed off so that it does not touch the punch (2). Place fixture in universal tester set for a travel speed of 0.125 inches per minute. Proceed with Test Number 1 and 2.

TEST NUMBER 1: NO BURST

Apply 57-pound compression load, remove paper tube. Item is rejected if evidence of bursting is observed. Tearing or puncturing of material shall be considered evidence of bursting.

TEST NUMBER 2: BURSTING

If item is not rejected, replace it in fixture, using the opposite end of the paper tube and apply 192 pounds compression load. If item shows no evidence of bursting (punch travels through material) it shall be rejected.

Downloaded from http://www.everyspec.com

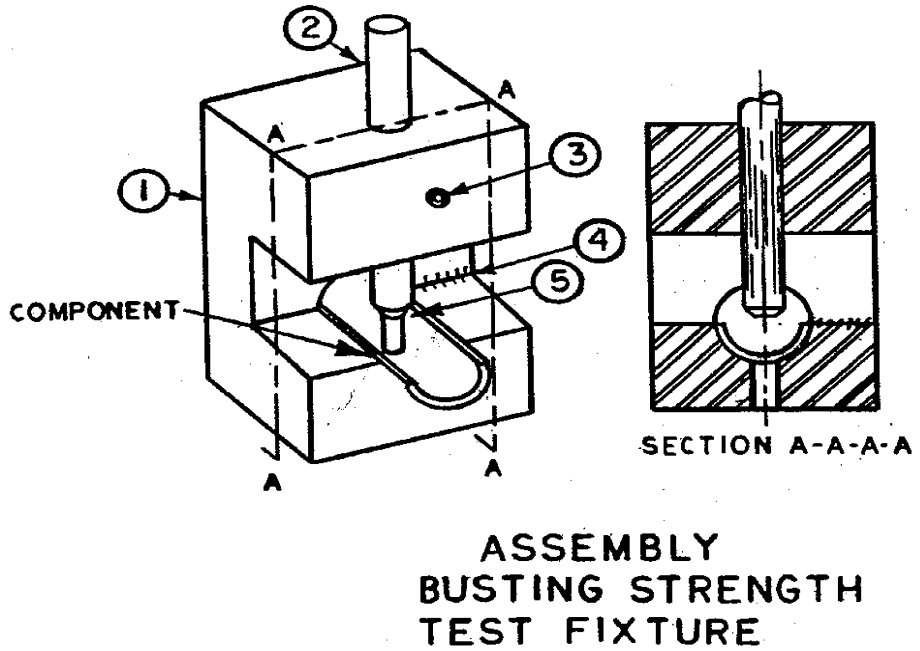

FIGURE 3-1: Burst strength fixture

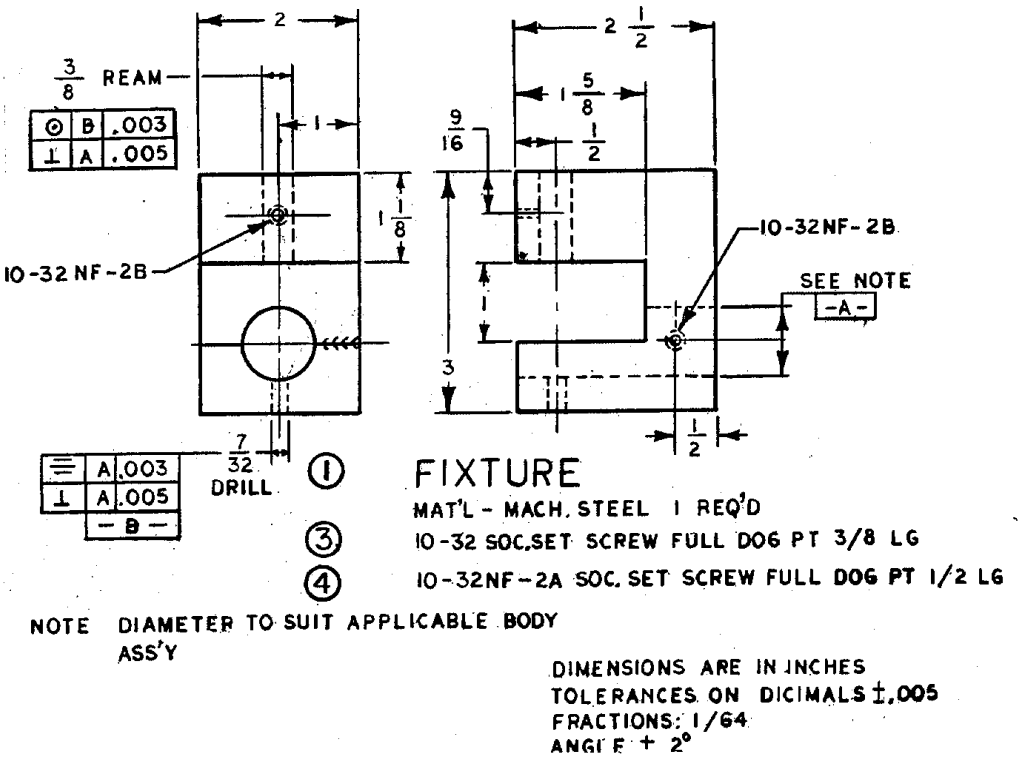

FIGURE 3-2. Sample dimension of test fixture

Downloaded from http://www.everyspec.com

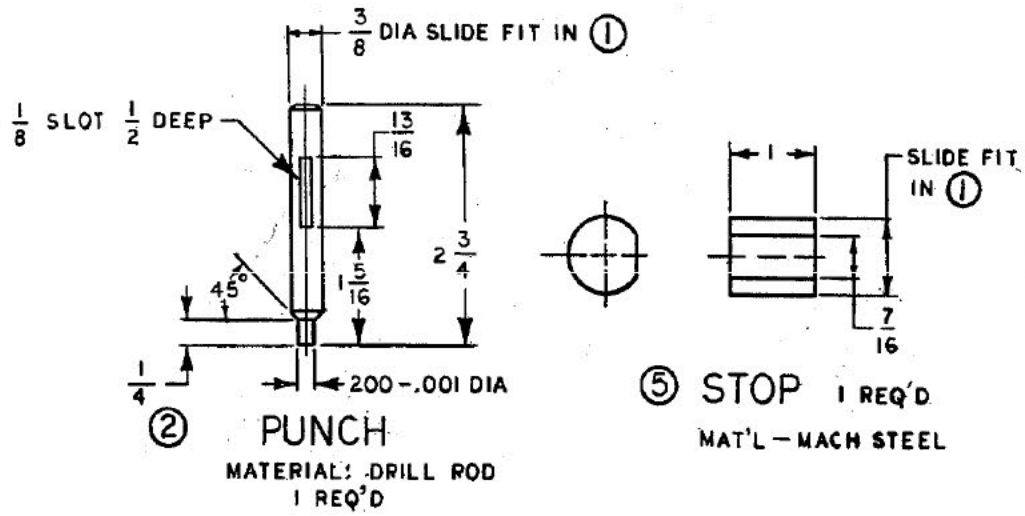

FIGURE 3-3. Sample dimension on punch for test fixture

4.5.8 Salt spray testing. Samples shall be tested using equipment and procedures in accordance with ASTM B117. Test duration shall be specified on the drawing. Parts shall be rinsed, dried and examined for evidence of pitting or mottling of the finish. One or more pits or mottling shall be cause for rejection of all parts represented by the sample.

4.5.9 Check for deterioration of ignition cartridge. The following test is designed to prevent the loading of major ammunition items with ignition cartridges which have deteriorated. The test shall be performed on each lot of ignition cartridges which have been stored under normal conditions for more than two years or under adverse conditions for any period of time, as determined by the technical agency. A sample of 50 ignition cartridges shall be selected for this test. If the mean velocity or velocity standard deviation exceeds the requirements (see Table I), the lot shall be rejected. If any round fails to function for reasons attributable to ignition cartridge failure, or if a metal parts separation occurs, the lot shall be referred. This test shall be performed as specified in 4.5.4.

4.5.10 Teardown inspection. Each ignition cartridge shall be subjected to an inspection of every critical defect and major defect as listed in the Table IV. Samples may be accumulated or inspected upon selection providing the selection remains random and represents the lot. The inspection shall be witnessed by the Government. The detection of any of the above defects shall be the cause for rejection of that day's production.

Downloaded from http://www.everyspec.com

Table IV. Teardown inspection

Paragraph number	Examination or Test
4.4.2.9	Critical – Flash hole(s) missing or excessive in number or obstructed
4.4.2.11	Critical – Pressure sensitive tape missing, loose or does not completely cover all flash holes Critical – Pin missing
4.4.2.15	Critical – Firing plug above flush with head surface Major – Flash tube assembly missing
4.4.2.17	Critical – Flash tube assembly missing Critical – Propellant weight Major – Propellant weight
4.4.2.18	Critical – Propellant weight Critical – Assembly improper or damaged to the extent that propellant can escape

4.5.11 Automatic Inspection of Ignition Cartridge. Automatic inspection of the ignition cartridge shall be performed 100% in accordance with paragraph 4.5.12 using Government approved equipment to assure that the ignition cartridge does not contain the defects listed in Table V. This inspection must be performed after final assembly of the ignition cartridge. All ignition cartridges classified as defective shall be automatically segregated. (see 6.10)

Table V. Automatic Inspection

Paragraph number	Examination or Test
4.4.2.18	Major - Pellet broken or chipped Major - Firing Plug Missing Major - Primer Missing Major - Pellet Missing

4.5.12. Automatic Inspection of Ignition Cartridge. The automatic inspection of the ignition cartridge shall be accomplished with an inspection system designed and maintained in accordance with paragraph 4.4.5. A non-destructive means shall be used to verify the defects listed in Table V. The equipment shall automatically accept or reject the ignition cartridge without requiring operator analysis or intervention and mark each accordingly. As a minimum the inspection equipment shall be checked at each inspection station with specially designed accept and reject standards, for each hour of production. If at any time the inspection system is found to be inoperative, the testing device shall be declared inoperative until repair and all assemblies tested since the last satisfactory verification shall be subjected to re-inspection. Designs of the proposed inspection equipment and associated procedures are required and shall be submitted in accordance with paragraph 6.3.

Downloaded from http://www.everyspec.com

5. PACKAGING

5.1 Packaging. For acquisition purposes, the packaging requirements shall be as specified in the contract or order (see 6.2). When packaging of materiel is to be performed by DOD personnel, these personnel need to contact the responsible packaging activity to ascertain requisite packaging requirements. Packaging requirements are maintained by the Inventory Control Point's packaging activity within the Military Department or Defense Agency, or within the Military Department's system Command. Packaging data retrieval is available from the managing Military Departments or Defense Agency's automated packaging files, CD-ROM products, or by contacting the responsible packaging activity.

6. NOTES

(This section contains information of general or explanatory nature and may be helpful, but not mandatory.)

6.1 Intended use. The components covered by this specification are intended for assembly to 120 mm cartridges for use with the M120/M121 mm Mortar system.

6.2 Acquisition requirements. Acquisition documents must specify the following:

a. Title, number and date of this specification.

b. Provisions for submission of first article sample.

c. Test support hardware (see 6.10).

d. Requirements for Ammunition Lot Number (see 4.4.1)

f. Requirements for acceptance inspection equipment (AIE) designs (see 6.3).

g. Certificate of Conformance requirement for each lot of material and each lot or shipment of product.

h. Requirements for First Article (see 4.2)

i. Provision for Quality Plan and Critical Nonconformance Control Plan.

j. Critical Characteristic Clause.

6.3 Submission of contractor inspection equipment designs for approval. Submit copies of designs as required to:

Commander, US Army ARDEC
ATTN: AMSRD-AAR-QEM-C
Building 62, Picatinny Arsenal, NJ 07806-5000

Downloaded from http://www.everyspec.com

This address will be specified on the Contract Data Requirements List, DD form 1423 in the contract.

6.4 Drawings. Drawings listed in Section 2 of this specification under the heading U.S. Army Armament, Research Development and Engineering Center (ARDEC) may also include drawings prepared by, and identified as ARRADCOM, Edgewood Arsenal, Frankford Arsenal, Rock Island Arsenal or Picatinny Arsenal drawings. Technical data originally prepared by these activities is now under the cognizance of ARDEC.

6.5 Submission of test data. One copy of proving ground ballistic acceptance test data (i.e., firing record) should be forwarded to the following:

Commander, U.S. Army ARDEC
ATTN: AMSRD-AAR-QEM-C and AMSRD-AAR-AEE-W
Picatinny Arsenal, NJ 07806-5000

6.6 Submission of alternative conformance provisions. All contractor proposed alternative conformance provisions will be submitted to the Government for evaluation/approval as directed by the contracting activity.

6.7 Burst strength test fixture. Equipment designs for similar paper tubes are available for reference in MIL-C-48161, MIL-C-48155 and MIL-C-48396. For copies contact,

Commander, U.S. Army ARDEC
ATTN: AMSRD-AAR-QEM-C
Picatinny Arsenal, NJ 07806-5000

6.8 Definitions.

a. Analysis - The use of analytical methods and mathematical formulas to determine if an item meets a requirement
b. Demonstration - A functional test (for example, ballistic firing) that provides verification that a requirement is met
c. Examination - Inspections utilizing gage(s) or visual means to assure conformance to requirement
d. Test - The conduct of specific procedures and methods to provide data verifying a requirement is met

6.9 Critical Classification Rationale:

Paragraph	Critical Callout(s)	Critical Rationale
4.4.2.7	Flash hole missing or obstructed	Defect may prevent propulsion gases from evenly igniting surrounding propelling charges leading to a short round.
4.4.2.9	Longitudinal flash hole	Defect may prevent propulsion gases from evenly

Downloaded from http://www.everyspec.com

	missing or obstructed	igniting surrounding propelling charges leading to a short round.
4.4.2.9	Flash hole(s) missing, excessive in number or obstructed	Defect may prevent propulsion gases from evenly igniting surrounding propelling charges leading to a short round.
4.4.2.11	Pressure Sensitive tape missing, loose, or does not completely cover the flash holes	Defect may prevent propulsion gases from evenly igniting surrounding propelling charges leading to a short round.
4.4.2.11	Pin missing	Defect may prevent propulsion gases from evenly igniting surrounding propelling charges leading to a short round.
4.4.2.15	Nonfunctioning sensitivity	A defect may lead to primer initiation during cartridge handling resulting in death or serious injury to the soldier.
4.4.2.15	Firing plug above flush with head surface	A defect may lead to primer initiation during cartridge handling resulting in death or serious injury to the soldier.
4.4.2.16	Ignition Cartridge function with Primer (Safety drop test)	A defect may lead to primer initiation during cartridge handling resulting in death or serious injury to the soldier.
4.4.2.17	Flash tube assembly missing	Defect may prevent propulsion gases from evenly igniting surrounding propelling charges leading to a short round.
4.4.2.17	Propellant weight greater than 1.0 gram below lower limit or above upper limit (after loading)	A low amount of propellant could produce a critical short round. A high amount of propellant could produce high pressure build up in the tube resulting in death or serious injury to the soldier.
4.4.2.18	Ignition Cartridge assembly weight (Propellant weight greater than 1.0 grams from the loading authorization)	A low amount of propellant could produce a critical short round. A high amount of propellant could produce high pressure build up in the tube resulting in death or serious injury to the soldier.
4.4.2.18	Assembly improper or damaged to the extent that propellant can escape	A low amount of propellant could produce a critical short round.
4.4.2.18	Excessive pressure on Fin Boom (Static	High pressure could cause a rupture of the fin boom resulting in death or serious injury to the soldier.

Downloaded from http://www.everyspec.com

	Pressure test)	
4.4.2.18	Teardown Inspection	A low amount of propellant could produce a critical short round. A high amount of propellant could produce high pressure build up in the tube resulting in death or serious injury to the soldier.

Short Round: The cartridge that has a horizontal range less than 80 percent of the average horizontal range (calculated without the short rounds).

6.10 Major Classification Rationale for automated inspection. The use of this inspection system will identify and remove ignition cartridge defects that are known causes of misfires in mortar ammunition. In the past, 100% visual inspections were relied on to detect these defects. Inspection escapes have been encountered in the past (three different suppliers) and costly re-inspection methods were used to remove the defects from the lots. This system will implement a more reliable inspection technique for missing firing plugs, missing primers, missing black powder pellet (s) and broken or chipped black powder pellets. The defects are classified as major but misfires can affect safety under certain conditions. Misfires have been identified as contributing factors in historical double load malfunction investigations. The purpose of implementing this system is to eliminate the obvious causes of misfires and isolate misfire causes to primer sensitivity failures.

6.11 Test support hardware. The following test hardware quantity is required to conduct the safety drop test and ballistic test for each of the First Article and Lot Acceptance Testing.

Hardware	Safety Drop	Static Pressure	Ballistic
Inert M734A1 fuze or equivalent fuze	25	-	50
Inert loaded 120 mm body assembly	12	-	50
M31 fin	25	25	50

6.12 Changes from previous issues. Marginal notations are not used in this revision to identify changes with respect to previous issue due to the extent of the change.

6.13 Subject term (key word) listing.

Functioning test
Leak test
Sensitivity
Velocity

Downloaded from http://www.everyspec.com

Custodian:
Army – AR

Preparing Activity:
Army – AR
(Project 1315-2007-004)

NOTE: The activities listed above were interested in this document as of the date of this document. Since organizations and responsibilities can change, you should verify the currency of the information above using the ASSIST Online database at http://assist.daps.dla.mil.