Downloaded from http://www.everyspec.com

INCH POUND

MIL-DTL-32130
August 12, 2003

DETAIL SPECIFICATION

UNDERWEAR, CHEMICAL PROTECTIVE, TWO PIECE

(UNDERSHIRT AND DRAWERS)

This specification is approved for use by all Departments and Agencies of the Department of Defense.

SCOPE

1.1 Scope. This specification covers underwear (undershirt and drawers) for 12 hours of protection against chemical warfare agents for periods up to 15 days of wear and one laundering. This is a special purpose Life Support Clothing and Equipment (LSC&E) item. All Government administrative and surveillance procedures applicable to LSC&E items will be invoked in accordance with the contract or purchase order (see 6.2).

1.2 Classification. The undershirt will be of following Types and sizes as specified. The drawers will be of one Type in the following sizes as specified (see 6.2).

Type I – Undershirt with collar
Type II – Undershirt with collar and Microclimate Cooling Garment (MCG) Pass- through

Undershirt Chest size schedule		Drawers Waist size schedule	
32	34	26	28
36	38	30	32
40	42	34	36
44	46	38	40
48	50	42	44
52	54	46	48

Beneficial comments (recommendations, additions, deletions, clarifications) and any pertinent data which may be of use in improving this document should be addressed to: Defense Supply Center Philadelphia, Clothing and Textiles Directorate, Attn: DSCP-CNR, 700 Robbins Ave., Philadelphia, PA 19111-5096 by using the Standardization Document Improvement Proposal (DD Form 1426) appearing at the end of this document or by letter.

AMSC N/A FSC 8415

Downloaded from http://www.everyspec.com

. APPLICABLE DOCUMENTS

2.1 General. The documents listed in this section are specified in sections 3 and 4 of this specification. This section does not include documents cited in other sections of this specification or recommended for additional information or as examples. While every effort has been made to ensure the completeness of this list, document users are cautioned that they must meet all specified requirements documents cited in sections 3 and 4 of this specification, whether or not they are listed.

2.2 Government documents

2.2.1 Specifications and standards. The following specifications, standards and handbooks form a part of this document to the extent specified herein. Unless otherwise specified, the issues of these documents are those listed in the issue of the Department of Defense Index of Specifications and Standards (DODISS) and supplement thereto, cited in the solicitation (see 6.2).

SPECIFICATIONS

FEDERAL

A-A-50199 - Thread, Polyester Core, Cotton- or Polyester-Covered
A-A-52095 - Thread, Polyester, Textured
A-A-55126 - Fastener Tapes, Hook and Loop, Synthetic
A-A-55634 - Slide Fasteners (Fasteners, Slide Interlocking)

MILITARY

MIL-D-3464 - Desiccants, Activated, Bagged, Packaging Use and Static Dehumidification
MIL-PRF-5038 - Tape, Textile, And Webbing, Textile, Reinforcing, Nylon
MIL-DTL-32075- Label: For Clothing, Equipage, and Tentage, (General Use)

(Unless otherwise indicated, copies of federal and military specifications, standards, and handbooks are available from the Document Automation and Production Service, Building 4D, (DODSSP/ASSIST) 700 Robbins Avenue, Philadelphia, PA 19111-5094.)

2.3 Non-Government publications. The following documents form a part of this document to the extent specified herein. Unless otherwise specified, the issues of the documents which are DoD adopted are those listed in the issue of the DODISS cited in the solicitation. Unless otherwise specified, the issues of documents not listed in the DODISS are the issues of the documents cited in the solicitation (see 6.2).

AMERICAN SOCIETY FOR QUALITY CONTROL (ASQC)

ANSI/ASQC Z1.4 Procedures, Sampling and Tables for Inspections by Attributes

(Applications for copies should be addressed to the American Society for Quality Control, 611 E. Wisconsin Ave., Milwaukee, WI, 53201-4606.)

AMERICAN SOCIETY FOR TESTING AND MATERIALS (ASTM)

Downloaded from http://www.everyspec.com

ASTM F 88 - Standard Test Method for Seal Strength of Flexible Barrier Material
ASTM D 882 - Test Method for Tensile Properties of Thin Plastic Sheeting
ASTM D 1249 - Specification for Octyl Ortho-Phthalate Ester Plasticizers
ASTM D 1922 - Standard Test Method for Propagation Tear Resistance of Plastic Film and Thin Sheeting by Pendulum Method
ASTM D 1974 - Standard Practice for Methods of Closing, Sealing and Reinforcing Fiberboard Boxes
ASTM D 1922 - Practice for Testing Synthetic Plasticizers Used in Rubber
ASTM D 3218 - Specification for Polyolefin Monofilaments
ASTM D 3951 - Standard Practice for Commercial Packaging
ASTM D 4727 - Corrugated and Solid Fiberboard Sheet Stock (Container Grade) and Cut Shapes
ASTM D 5035 - Standard Test Method for Breaking Force and Elongation of Textile Fabrics (Strip Force)
ASTM D 5118 - Standard Practice for Fabrication of Fiberboard Shipping Boxes
ASTM D 6193 - Standard Practice for Seams and Stitching

(Application for copies should be addressed to the American Society for Testing and Materials, 100 Barr Harbor Drive, West Conshohocken, PA 19428-2959.)

(Non-Government standards and other publications are normally available from organizations that prepare or distribute the documents. These documents also may be available in or through libraries or other informational services.)

2.4 Order of precedence. In the event of a conflict between the text of this document and the references cited herein, the text of this document takes precedence. Nothing in this document, however, supersedes applicable laws and regulations unless a specific exemption has been obtained.

3. REQUIREMENTS

3.1 First article. When specified (see 6.2), a sample shall be subjected to first article inspection (see 6.3) in accordance with 4.2.

3.2 Guide samples. Guide samples, when furnished, are solely for guidance and information to the contractor (see 6.4). Variations from this specification may appear in the sample, in which case this specification shall govern.

3.3 Recycled, recovered, or environmentally preferable materials. Recycled, recovered, or environmentally preferable materials should be used to the maximum extent possible provided that the material meets or exceeds the operational and maintenance requirements, and promotes economically advantageous life cycle costs.

3.3.1 Body material. The basic cloth for the undershirt or drawers shall conform to Xymid, LLC Part No. LANX I (see 6.8). The base cloth is a polymerically encapsulated activated carbon, and shall provide uniform carbon distribution and chemical protection which is not degraded over a

Downloaded from http://www.everyspec.com

30- day service-life, 12 year shelf-life. The LANX fabrics shall have a tailorable stretch, to ensure good fit and user comfort.

3.3.1.1 HFC43-10 adsorption. The HFC43-10 adsorption of the body material shall show no individual sample result less than 1.8 mg/cm^2, when tested in accordance with 4.3.5 (see 6.8).

3.3.2 Lining and Microclimate Cooling Garment welt/backing fabric. The lining fabric for top collar, front flap, underarm, crotch, MCG welt and MCG pass-through backing shall be a nylon/lycra tricot fabric. The fabric shall be dyed black and shall conform to the requirements in Table I when tested as specified in 4.3.1.1.

TABLE I. Lining fabric physical characteristics

Characteristic	Requirement
Weight, oz/sq yd	4.2 to 4.6 oz/sq yd
Breaking strength, pounds, minimum Wale direction Course direction	 13 lbs, min. 25 lbs, min.
Breaking elongation, percent minimum Wale direction Course direction	 350 % min. 150 % min.

3.3.3 Thread. The thread for seaming and stitching shall conform to sizes Tex 45-50 (T-50) and size Tex 35 (T-35) of A-A-52095 and to Type I or II, size 50/2 and 70/2 of A-A-50199, as specified in Table III. The thread shall be dyed black. The thread shall be water-repellent (Quarpel) treated and dyed black. Thread lubricants shall not stain adjacent fabric.

3.3.4 Fastener tape. The 1-inch and 2-inch wide synthetic hook and loop fastener tapes shall conform to Type I or Type II, Class 1, color black of A-A-55126. The fastener tape for the MCG opening shall be 5 –1/4 $\pm$ 1/8 inches in length.

3.3.5 Nylon reinforcing textile tape. The black nylon reinforcing textile tape for the bartack at sleeve vents shall conform to Type III, any Class, 3/8 or 1/2 inch width of MIL-PRF-5038.

3.3.6 Slide Fastener. Slide Fastener shall be in accordance to A-A-55634, continuous element chain, Type III, style 8, size 5 with long pull tab. The pull tab shall have an 11 inch heat cut thong conforming to A-A-55634. The tape shall be 9/16 $\pm$ 1/32 inch wide and water repellent treated. The color including chain, tape, slider, and thong shall be b1ack. The pin and box shall be metal. The length of the Slide Fastener shall correspond to the undershirt size in Table II.

Downloaded from http://www.everyspec.com

Table II. Slide Fastener Length (inches)

Slide Fastener Lengths			
Undershirt size	**Type I**	**Type II**	**Tolerance**
32	26 3/4	23	± 1/4
34	27 1/2	23 3/4	± 1/4
36	28 1/4	24 1/2	± 1/4
38	29	25 1/4	± 1/4
40	29 3/4	26	± 1/4
42	30 1/2	26 3/4	± 1/4
44	31 1/4	27 1/2	± 1/4
46	32	28 1/4	± 1/4
48	32 3/4	29	± 1/4
50	33 1/2	29 3/4	± 1/4
52	34 1/4	30 1/2	± 1/4
54	35	31 1/4	± 1/4

3.3.7 Elastic webbing. The elastic webbing for making the waistband shall be a woven, knitted, or braided textured polyester webbing conforming to the requirements listed below. The color of the polyester webbing shall be black. (see 4.3.1.2).

Characteristic	Requirement
Width	1-1/4 ± 1/16 inches
Weight, minimum	0.55 ounces per linear yard
Elastic ends, minimum	17
Picks per inch, minimum	36
Warp ends, minimum	17

3.3.8 Labels. Each undershirt or drawers shall have a combination identification/size/instruction label conforming to Type VI, Class 14 of MIL-DTL-32075 except that the surveillance marking requirement for the body material (see 3.3.9) shall appear under the last line of inscription on the label. The surveillance marking may be hand printed or stamped. Size of the characters for the surveillance marking shall be a minimum of ten points.

For the undershirt, all required information shall be printed on one side and attached to the protective flap as specified in operation 6b of Table IV. For the drawers, the size and identification information shall be printed on the top portion of the label and the care instructions below the size and identification information such that spacing is allowed for the label to be folded (fold line not through printing). The spacing is for catching the bottom of the label in the stitching attaching it and the waist elastic (stitching not through printing) as specified in operation 16.d. of Table IV. The care instructions shall face right side up when the drawers label is turned over. The label shall include the following care instructions:

Downloaded from http://www.everyspec.com

CHEMICAL PROTECTIVE UNDERWEAR (CPU)

CARE INSTRUCTIONS

Close slide fastener and hook and loop tapes on undershirt to prevent rips and tears during laundering.

Field/post or Shipboard laundry: Launder utilizing Formula II of FM 42-414 or Post launder using Formula IV of "Natick Formulas". Tumble dry not to exceed 120° F. Remove immediately. Or follow Navy Shipboard Wash Formula III.

Machine (home) laundering: Use permanent press wash cycle, warm water (90° - 110 °F) and a mild non-phosphate detergent. Tumble dry at medium temperature setting until dry. Remove immediately. Or drip dry on rust proof hanger.

Hand Washing: Use warm, not hot water and an appropriate amount of a mild non-phosphate detergent. Drip dry on a rust proof hanger until completely dry.

DO NOT LAUNDER MORE THAN ONCE

DO NOT STARCH / BLEACH / DRY CLEAN / STEAM PRESS

WARNING

THE CPU IS NOT FLAME RETARDANT. GARMENT CAN BE WORN FOR 15-DAYS (WEAR-LIFE) BUT SHOULD NOT BE WORN PAST 30 (SERVICE-LIFE) DAYS AFTER REMOVAL FROM THE ORGINAL PACKAGING

DO NOT REMOVE THIS LABEL

	1	2	3	4	5	6	7	8	9	10	11	12	13	14	15
WEAR-LIFE															

MARK AN "X" FOR EACH DAY OF WEAR

INDICATE SERVICE-LIFE DATE

3.3.9 Surveillance marking. (see 6.2) Each roll from each lot of finished body material shall be identified with a specific surveillance marking which will consist of and shall be in the following format:

XX1/ XXXXX 2/ AA 3/ XXXXXX 4/

Downloaded from http://www.everyspec.com

NOTE:

1/First two letters are the fabric manufacturer's company name, using capital letters.
2/ First five Xs (digits) designate the lot.

3/ Two letters designate the master rolls.

4/ First two Xs (digits) designate day of lot production.
Middle two Xs (digits) designate month of lot production.
Last two Xs (digits) designate year of lot production.

3.3.10 Identification and contract data markings. The markings shall be applied to the vapor barrier bag (see 6.2). The use of adhesive type labels is prohibited. The surveillance marking is identified in paragraph 3.3.9. The label shall be as follows:

NATIONAL STOCK NUMBER: 8415-00-000-0000 (EXAMPLE)
UNDERGARMENT, SHIRT, CHEMICAL PROTECTIVE (EXAMPLE)
SIZE: 30 (EXAMPLE)
CONTRACT NO: DLA100-02-D-0000 (EXAMPLE)
DATE PACKAGED: (LEAVE BLANK)*
MANUFACTURING DATE: (LEAVE BLANK)
INSPECTION DATE: (LEAVE BLANK)
SURVEILLANCE MARKING NO: XX XXXXX AA XXXXXX (EXAMPLE) "1/ See3.3.9"

(1) WHEN MAXIMUM PROTECTION IS REQUIRED, WEAR THIS GARMENT WITH CHEMICAL PROTECTIVE SUIT, CHEMICAL PROTECTIVE MASK, CHEMICAL PROTECTIVE GLOVES AND CHEMICAL PROTECTIVE FOOTWEAR.

(2) USE THE SIZE PREDICTION CHARTS TO DETERMINE THE GARMENT SIZE YOU WILL NEED.

*NOTE: SUITS SHALL BE PACKAGED WITHIN SEVEN (7) DAYS OF MANUFACTURE.

3.3.11 Instruction sheet for donning the underwear. Each unit pack of drawers shall be furnished with an 8-1/2 by 11 inches instruction sheet placed inside the packaging. The instruction sheet shall be printed on white bonded paper. The contents and printing of the instruction sheet shall be in accordance with Figure 1.

3.4 Design.

3.4.1 Undershirt. The undershirt shall have long sleeves with adjustable hook and loop closures, a front slide fastener closure with an inside protective flap and the underarms shall be lined with underarm shields. The Type I and Type II undershirts have a collar that converts into a turtleneck when the slide fastener is closed completely. (see Figures 2a and 2b). The Type II undershirt has a pass-thru opening on the right side front (see Figure 2b).

Downloaded from http://www.everyspec.com

3.4.2 Drawers. The drawers shall be full length with an elastic waist. The inside back and front crotch shall be lined with a crotch shield (see Figure 3).

3.5 Patterns. Standard patterns, which show size, directional lines, placement marks, and notches for assembly and seam allowance unless otherwise specified, will be furnished by the Government. The Government patterns shall not be altered in any way and shall be used as a guide for cutting the working patterns.

NOTE: The seam allowances for patterns shall be as follows:

Type 607 stitch	-	1/2 inch (includes 3/8 inch allowed for trimming).
Sleeve setting (to armhole)	-	1/2 inch (includes 1/4 inch allowed for trimming).
All other seams	-	1/4 inch.

3.5.1 List of pattern parts. The component parts of the underwear shall be cut from the materials specified in accordance with Table III and in accordance with the number of cut parts required for the manufacturing process.

TABLE III. Pattern Parts

Material	Pattern Nomenclature	Computer Nomenclature	Cut parts
LANX I body material	Undershirt:	Undershirt	
	Body, Type I	BODY_I	1
	Body, Type II	BODY_II	1
	Sleeve	SLEEVE	2
	Under collar, Type I	UND_CLR_I	1
	Under collar, Type II	UND_CLR_II	1
	Front Flap, Type I	FRT_FLP_I	1
	Front Flap, Type II	FRT_FLP_II	1
	MCG Backing	MCG_BCK_II	1
	Drawers:	Drawers	
	Leg	LEG	2

Downloaded from http://www.everyspec.com

Nylon/Lycra tricot	Undershirt: Top collar, Type I Top collar, Type II Flap Lining, Type I Flap Lining, Type II Underarm shield Front sleeve shield Back sleeve shield MCG Backing MCG Welt Drawers: Front crotch shield Back crotch shield	Undershirt TOP_CLR_I TOP_CLR_II FLP_LIN_I FLP_LIN_II U_ARM_SHLD F_SLV_SHLD B_SLV_SHLD MCG_BCK_II MCG_WLT Drawers FRT_C_HLD BK_C_SHLD	 1 1 1 1 2 2 2 1 1 1 1
Elastic webbing	Waistband	WAISTBAND	1
Fastener tape	Undershirt: Sleeve: 1 inch loop 2 inch hook left 2 inch hook right	Undershirt 1_IN_PILE 2_IN_HK_L 2_IN_HK_R	 2 1 1

3.6 Construction. The construction shall conform in all respects to the requirements specified in Table IV and herein. Figures are furnished solely for guidance and information. Should variation from the specification appear in the figures, the specification shall govern.

3.6.1 Stitches, seams, and stitchings. Stitches, seams, and stitching Types specified in Table IV shall conform to ASTM D 6193. Whenever two or more methods, seams, or stitches are given for the same part of an operation, any one of them may be used. Seam allowances shall be maintained with seam sewn so that no raw edges, run-offs, pleats, puckers, or open seams occur. Ends of all stitching when not caught in other seams or stitching shall be backstitched not less than 1/2 inch. Thread tension shall be maintained so there will be no loose stitching resulting in a loose bottom or top thread or no excessively tight stitching resulting in puckering of the materials sewn. The minimum and maximum number of stitches per inch shall be as specified in Table IV.

3.6.2 Repair of stitching.

a. When thread breaks or bobbin run-outs occur during sewing for stitch Types 301 and 304, the stitching shall be repaired by restarting a minimum of 1/2 inch back of the end of the stitching.

b. Repairs of Types 607 and 504/406 combination shall be made with a Type 304 Stitch

c. Thread breaks (all stitch Types) or two or more consecutive skipped or run-off stitches noted during inspection shall be repaired by over-stitching. The stitching shall start a minimum of 1/2 inch back of the defective area, continue over the defective area, and continue a minimum of 1/2 inch beyond the defective area onto the existing stitching. Loose or tight stitching shall be repaired

Downloaded from http://www.everyspec.com

by removing the defective stitching without damaging the material and restitching in the required manner. The ends of stitching are not required to be backstitched when making the above repairs.

3.6.3 Types 304, 504, and 406 stitching. Type 304 seams shall be maintained to provide a zigzag pattern width of 1/8 to 3/16 inch on the armshield and crotch piece components. The gage of the overedge stitching (Type 504/406) shall be 3/16 (± 1/16) inch. The guide knives for the overedge machines shall be set to trim only raw edge of material. The seam allowance of the Type 504/406 stitch joining seam shall be finished towards the outside of the underwear.

3.6.4 Type 607 stitching. Type 607 (flat lock), a six thread (four needle, one looper, one cover) flatseam stitch. The seam shall be 3/16 (± 1/16) inch wide and lapped such that a minimum of one needle penetrates through both the top and bottom layer of lap to provide for a flat even seam.

3.6.5 Bartacking. Bartacking shall be 5/8 (± 3/16) inch long, 1/8 (± 1/32) inch wide and shall contain 42 stitches nominal. Bartacks shall be free from thread breaks and loose stitching. Bartack reinforcing material shall be as specified in 3.3.6.

3.7 Manufacturing operations requirements. The underwear (undershirt and drawers) shall be manufactured in accordance with all operations specified in Table IV. The contractor is not required to follow the exact sequence of operations.

NOTE: Sewing machines should use the smallest possible ballpoint needles and set up so as to avoid needle cutting of the body material.

Downloaded from http://www.everyspec.com

TABLE IV. Manufacturing Operations

No.	Manufacturing Operations Requirements	Stitch Type	Seam and Stitching Type	Stitches per Inch	Thread		
					Needle	Bobbin Looper	Cover
1.	Cut undershirts or drawers.						
	a. The undershirts or drawers shall be cut in strict accordance with the patterns. All component parts shall be cut lengthwise in the machine direction unless otherwise indicated on patterns. The wale or rib surface of material shall face the inside of the garments. NOTE: This material has a significant amount of stretch and surface friction. Special care needs to be utilized to insure that this material is not cut under any tension.						
	b. Cut the collar lining (Types I & II), flap lining, crotch and underarm shields, MCG welts and MCG backing in strict accordance with the patterns.						
	c. Cut the hook and loop portions of fastener tape in accordance with the pattern pieces and para. 3.3.5.						
	d. Cut waist elastic for drawers in accordance with the pattern piece.						
	e. Cut nylon reinforcing textile tape 2 ± 1/8 inches.						
2.	Replacement of damaged parts.						
	Care shall be exercised during the spreading, cutting and manufacturing operations to assure that material defects and damages as Classified in Table IX are excluded and replaced with non-defective material.						

Downloaded from http://www.everyspec.com

TABLE IV. Manufacturing Operations cont'd

3.	Marking.						
	a. Mark or bundle cut parts of the undershirt and drawers to insure a uniform size, uniformity of shade, and proper assembly throughout fabrication.						
	b. Any method of marking my be used except: (1) Metal fastening devices. (2) Sew-on tickets. (3) Adhesive Type tickets which leave traces of adhesive on the material after removal of the tickets.						
	UNDERSHIRTS						
4.	Attach underarm shields.						
	a. Place shields on sleeve and undershirt at underarm to finish on the inside of the garment as indicated by marks on pattern and stitch the outer edges of the corresponding undershirt part. NOTE: Threads, size tex 45-50 (50s) and size tex 35 (70s) are inter-changeable except for stitch Type 607.	301	SSa-1	10-14	50/2	50/2 or 70/2	
	b. Zig-zag stitch the curved edges of the shields to the undershirt. The raw edge of the shield shall be covered by the stitching.	304	LSbj-1	10-14	50/2	50/2 or 70/2	
5.	Make collar.						
	With top and under collars face to face, stitch together along top collar edge only.	301	SSa-1	10-14	50/2	50/2 or 70/2	

Downloaded from http://www.everyspec.com

TABLE IV. Manufacturing Operations cont'd

6.	Make protective flap and attach label.						
	a. Place front flap and flap lining face to face and stitch along top, one side and bottom. Turn, force out corners and raise stitch 3/16 to ¼ inch from edge. NOTE: Lining fabric faces the body. Pre-stitch the flap prior to stitch operation may be used to stabilize the sewing.	301	SSe-2 (a)	10-14	50/2	50/2 or 70/2	
	b. Position the label on the inside portion of the front flap (as worn) and stitch on all four sides. Stitching shall not be thru the printing. The label bottom shall be positioned 1/2 inch nominal from the finished flap bottom edge. NOTE: Stitching may go thru all layers of garment	301	Sse-2	10-14	50/2	50/2	50/2 or 70/2
7.	Make MCG pass-thru opening and backing – Type II only						
	Finished appearance. The width of the MCG opening shall finish 1/4 ± 1/16 inch. The length of the MCG opening shall finish 3 ± 1/8 inches. The folded edges of the welts shall meet and shall not be twisted, puckered, tight, uneven, short or too full. a. Fold and position MCG welts on right front of undershirt (as worn), face to face, as indicated on pattern. Stitch according to marks on pattern. Cut through undershirt front on center line and tongue notch ends. Do not cut through stitch line.	301	SSbe-(a)	10-14	50/2	50/2	

Downloaded from http://www.everyspec.com

TABLE IV. Manufacturing Operations cont'd

	b. Turn MCG welts to inside and stitch 1/16 inch from turned edges. Position loop portion of fastener tape to undershirt as indicated by marks on pattern. Stitch on all four sides 1/8 to 3/16 inch from edge of tape.	301	SSbe-2(b) and LSbj-1	10-14	50/2	50/2	
	c. Place 1/2 inch bartack on undershirt front, at each end of welted opening.	Bartack		28 per Bartack	50/2	50/2	
	d. Place MCG backing pieces together with wrong sides facing and overedge all sides.	503 or 504	SSa-1	6-10	50/2	50/2	
	e. Position hook portion of fastener tape to front (basic material side) of MCG backing as indicated by marks on pattern. Stitch on all four sides 1/8 to 3/16 inch from edge of tape. Position MCG backing, on inside of undershirt right front, over welted opening in accordance with marks on pattern, matching hook and loop fastener tape. Stitch MCG backing to undershirt 1/4 ± 1/16 inch from edge along sides and bottom catching ends of fastener tapes in stitching. Do not stitch through welt.	301 301	LSbj-1 LSbj-1	10-14 10-14	50/2 50/2	50/2 50/2	
8.	Make sleeves.						
	a. Overedge stitch bottom raw edge of sleeve and sleeve vent.	504	EFa-1	10-14	50/2	50/2 or 70/2 or T-50	
	b. Position the material back to back, join sleeve inseam from top of wrist opening to underarm catching edges of underarm shield in seam. NOTE: Stitches per inch is 8-12 typical for all Type 607 stitch operations.	607	FSa-1	8-12	T-50	T-50	

Downloaded from http://www.everyspec.com

TABLE IV. Manufacturing Operations cont'd

	c. Turn up bottom of sleeve 1 inch + 1/8, -0 inch and hem with a double row of stitching having a 1/4 inch + 1/16, -0 inch gage between the rows.	406	EFa-2	10-14	70/2 or T-35	70/2 or T-35	
	d. Position hook and loop fastener tapes on sleeve opening edges. The fastener tapes shall start at the top of the wrist opening and finish on the bottom turn-up. Stitch all four sides 1/8 to 3/16 to inch from edge. NOTE: The previously overedged vent edge shall be turned back 3/8 inch and caught under the hook and loop fastener tape during tape stitching.	301	LSbj-1	10-14	50/2	50/2	
	e. Position reinforcement material on inside of wrist opening at underarm seam. Fold top edge of the tape over (approximately 45 degrees) and bartack. Place a 5/8 inch bartack on each side of the wrist seam. Bartacks shall be at an approximate 45 degrees to the seam opening. Bartacks may catch the fastener tapes and raw edge of wrist opening seam.	Bartack		42 stitches nominal bartack	50/2	50/2	
9.	Join shoulder seam.						
	Position the material back to back, join shoulder seams.	607	FSa-1	8-12	T-50	T-50	T-50 or T-35
10.	Set slide fastener, protective flap and collar.						
	a. Seam undercollar to neck of undershirt. The collar ends shall finish even with the edges of the undershirt front opening.	301	SSa-1	10-14	50/2	50-2 or 70/2	

Downloaded from http://www.everyspec.com

TABLE IV. Manufacturing Operations cont'd

	b. Position back edge of slide fastener tape even with raw edges of front opening and undercollar, with stops even with the top edge of collar, +0, -1/8 inch. Fold top collar over slide fastener tape and undercollar Turn under ends of slide fastener tape and stitch to front edges and collars, catching protective flap in the right side stitching only. The top edge of protective flap shall finish even with the collar joining seam.	504	SSa-1	10-14	50/2	50/2 or 70/2 or T-50	
	c. Turn undercollar to finished position and force out corners. Turn in bottom edge of top collar and stitch to neck of undershirt 1/16 to 1/8 inch from edge, with the stitching not more than 1/8 inch from under-collar joining seam.	301	LSb-1	10-14	50/2	50/2 or 70/2	
	d. With slide fastener tape turned to inside of shirt, turn up hem allowance and top stitch 1/4 inch from turned edge. Stitching shall start at base of left side opening (as worn), continuing around collar edges and down right side. The protective flap shall extend out beyond the slide fasrener.	301	Efa-1	10-14	50/2	50/2 or 70/2	

Downloaded from http://www.everyspec.com

TABLE IV. Manufacturing Operations cont'd

11.	Set sleeves.						
	Join sleeve to shirt armhole, position the material back to back. Spread seam flat, and cover stitch seam.	504 and 406	SSa-1 SSh-2	10-14 10-14	50/2 70/2 or T-35	50/2 or 70/2 or T-50 70/2 or T-35	
12.	Hem undershirt.						
	a. Overedge bottom of shirt.	504	EFd-1	10-14	50/2	50/2 or 70/2 or T-50	
	b. Turn up bottom of shirt 1 ± 1/8 inch and stitch with a double row of stitching having a 1/4 + 1/16, -0 inch gage between the rows. The double row of stitching shall start and terminate on the slide fastener joining seam.	406	EFa-2	10-12	70/2 or T-35	70/2 or T-35	
	DRAWERS						
13.	Attach crotch shields.						
	a. Place shields on front, back and legs at crotch to finish on inside of drawers, as indicated by pattern marks. Stitch the outer edges of shield to the corresponding drawers part.	301	SSa-1	10-14	50/2	50/2 or 70/2	
	b. Zig-zag stitch the curved edges of the shields to the drawers. The raw edge of the shield shall be covered by the stitching.	304	LSbj-1	10-14	50/2	50/2 or 70/2	
14.	Join front and back seams.						
	a. Position the material back to back, join front seam catching edges of crotch shield in seam.	607	FSa-1	10-14	T-50	T-50 or T-35	T-50 or T-35
	b. Position the material back to back, join back seam catching edges of crotch shield in seam.	607	FSa-1	10-14	T-50	T-50 or T-35	T-50 or T-35
15.	Join inseam.						
	Position the material back to back, join inseam catching edges of crotch shield in seam.	607	FSa-1	10-14	T-50	T-50 or T-35	T-50 or T-35

Downloaded from http://www.everyspec.com

TABLE IV. Manufacturing Operations cont'd

16.	Attach waistband and set label.						
	a. Overlap ends of waistband and stitch across the full width of the waistband webbing.	606 or 607	LSa-1	10-14	50/2 or T-50	70/2 or T-50 or T-35	
	b. Stitch webbing to drawers with the overlap offset ½ inch from the back seam. The webbing shall overlap the top edge of drawers by 3/8 ± 1/8 inch. OR	604 or 607	LSa-1	8-12	T-50	T-50 or T-35	T-50 or T-35
	c. Position webbing on drawers with the overlap on the back seam and stitch with a double row of stitching having a 5/16 inch gage. The webbing shall overlap the drawers by 3/8 ± 1/8 inch.	406	LSa-1	10-12	70/2 or T-35	50/2 or T-35	
	d. Fold bottom of label under (fold shall in between the printed lines) and center label over the webbing seam (inside the center back). Align top edge of label with top edge of the waistband and stitch on all four sides, catching the size and identification information in stitching. The remainder of the label shall hang free. The stitching shall not be through the printing.	301	LSbj-1	10-14	50/2 or 70/2	50/2 or 70/2	
17.	Hem legs.						
	a. Overedge bottom of legs.	504	EFd-1	10-14	50/2	50/2 or 70/2 or T-50	
	b. Turn up leg bottom 5/8 ± 1/8 inch and stitch with a double row of stitching with a 5/16 inch gage.	406	EFa-2	10-12	70/2 or T-35	70/2 or T-35	
18.	Clean undershirts or drawers.						
	Trim all ends of stitching to 3/8 inch maximum length throughout and remove loose threads.						

3.8 Finished measurements. The finished measurements shall be as shown in Tables V and VI.

Downloaded from http://www.everyspec.com

TABLE V. Undershirt - Finished Measurements (inches)

Size	One half chest 1/	Back length 2/		Sleeve length 3/	One half neck 4/
		Type I	Type II		
32	15 1/2	27	25	18 1/2	8 1/4
34	16 1/2	27 3/4	25 3/4	19	8 1/2
36	17 1/2	28 1/2	26 1/2	19 1/2	8 3/4
38	18 1/2	29 1/4	27 1/4	20	9
40	19 1/2	30	28	20 1/2	9 1/4
42	20 1/2	30 3/4	28 3/4	21	9 1/2
44	21 1/2	31 1/2	29 1/2	21 1/2	9 3/4
46	22 1/2	32 1/4	30 1/4	22	10
48	23 1/2	33	31	22 1/2	10 1/4
50	24 1/2	33 3/4	31 3/4	23	10 1/2
52	25 1/2	34 1/2	32 1/2	23 1/2	10 3/4
54	26 1/2	35 1/4	33 1/4	24	11
Tolerance	±1/2	+3/4 / - 1/2	+3/4 / - 1/2	±1/2	±1/4

1/ With slide fastener closed, measure from folded edge to folded edge at base of armhole.

2/ Measure along center back from collar setting seam to bottom of undershirt.

3/ Measure along underarm seam from armhole seam to bottom of sleeve.

4/ With slide fastener closed, and top edges of collar even, measure across collar from folded edge to folded edge.

NOTE: All measurements shall be taken with the undershirt laid out flat and under no tension.

Downloaded from http://www.everyspec.com

TABLE VI. Drawers - Finished Measurements (inches)

Size	One half waist 1/	Inseam 2/	One half leg bottom width 3/
26	11 1/2	26 1/2	5 1/2
28	12	27	5 5/8
30	12 1/2	27 1/2	5 3/4
32	13	28	5 7/8
34	13 1/2	28 1/2	6
36	14	29	6 1/8
38	14 1/2	29 1/2	6 1/4
40	15	30	6 3/8
42	15 1/2	30 1/2	6 1/2
44	16	31	6 5/8
46	16 1/2	31 1/2	6 3/4
48	17	32	6 7/8
Tolerance	±1/2	±1/2	±3/8

1/ Measure along center of waistband from front seam to back seam assuring that the top edges of the elastic webbing are aligned.

2/ Measure inseam of drawers from crotch seam to bottom edge of drawers.

3/ Measure width of leg at hem from folded edge to folded edge.

NOTE: All measurements shall be taken with the drawers laid out flat with no smoothing of the fabric and under no tension.

3.9 Chemical stability. To ensure chemical stability one folded undershirt or drawers along with desiccant and a 4.0 mil recloseable polyethylene storage bag (see 3.9.1), shall be placed in a foil barrier bag and sealed in accordance with 3.9.2. Each package shall then be placed inside of a 3.0 mil, clear polyethylene overbag with vent holes and the closure heat sealed (see 3.9.3).

3.9.1 Polyethylene storage bag. The polyethylene storage bag shall be 4.0 mil, clear, recloseable and shall have an inside dimension of 14 X 22 inches. The bag shall be folded and placed in the folds of the undershirt or drawers.
NOTE: The 4.0 mil recloseable polyethylene storage bag shall be folded so that the slide fastener closure is not creased.

3.9.2 Barrier bag. The barrier bag shall have the approximate inside dimensions of 12 x 17 inches. The bag shall be constructed from tan colored, flexible, multi-layer nylon foil film with an opaque finish. The nylon foil film shall be constructed as follows:

Downloaded from http://www.everyspec.com

60 g Nylon
0.0005 in. Polyethylene
0.00035 in. Aluminum Foil
0.0022 in. Polyethylene

The film shall conform to the following physical requirements:

TABLE VII. Packaging Material Requirements

TEST	TEST METHOD	REQUIREMENT
Water Vapor Transmission Rate (WVTR)	ASTM F 1249	0.30
g/m^2 /24 hrs, maximum	ASTM D 882	
Tensile strength, lbs., minimum		24
Machine		20
Cross machine	ASTM D 1922	
		140
Tear strength, grams, minimum		100
Machine	ASTM F 88	7
	ASTM D 3218	No alligatoring or
Cross machine	350 hours exposure	detrimental degradation of
Seam Strength, lbs./in, minimum		the sample after exposure
Ultraviolet Resistance		
Chemical Agent Resistance, conc. ug/cm^2	TECOM TOP 8-2-501 AVLAG @ Press. Diff.>0 MDL 0.50, Agent HD 16 hrs with HD	<0.50
Chemical Agent Resistance, conc. ug/cm^2, New material after decon	TECOM TOP 8-2-501 AVLAG @ Press. Diff >0 MDL 0.50, Agent HD HD then decon'ed with an M295 decon wipe	<2.0

Barrier bags shall have a tear, nick, or "V" notch, one eighth (1/8) inch deep in at least one edge, two (2) inches from the end of the bag. The barrier bag shall be vacuum packaged at 13-15 inches Hg. The closure shall be heat sealed. The heat seal shall be 1/8 inch (minimum) in width, uniform and smooth (without wrinkles or foreign matter) and shall have a seam strength of not less than 7 pounds per linear inch when tested as specified in 4.3.6. The package shall be firm and compact when inspected visually and manually as specified in 4.3.6. Any unacceptable packages shall be repackaged.

Downloaded from http://www.everyspec.com

3.9.3 The polyethylene overbag shall be 3.0 mil, clear and shall have inside dimensions of 14 X 20 inches. The bag shall contain a vent hole to allow trapped air to escape to minimize packing bulk. The bag shall be heat sealed. The heat seal shall be 1/8 inch (minimum) in width, uniform and smooth (without wrinkles or foreign matter) and shall have a seam strength of not less than 7 pounds per linear inch.

3.10 Workmanship. The finished underwear shall conform to the quality of product established by this specification and the occurrence of defects shall not exceed the applicable acceptable quality levels. Utmost care shall be taken during the underwear fabrication to ensure quality workmanship and safety of the service person using the item.

4. VERIFICATION

4.1 Classification of inspection. The inspection requirements specified herein are classified as follows:

a. First article inspection (see 4.2).
b. Conformance inspection (see 4.3)

4.2 First article inspection. When a first article is required (see 6.3), it shall be examined for the defects specified in 4.3.3 and 4.3.4, and tested as required in 4.3.5. Failure of any test or presence of any Critical or Major defect, to include dimensional tolerance defects, shall be cause for rejection of the First Article.

4.3 Conformance inspection. Unless otherwise specified, sampling for inspection shall be performed in accordance with ASQC Z1.4. A lot shall consist of units of undershirts or drawers.

4.3.1 Component and material inspection. Components and materials shall be inspected in accordance with all the requirements of referenced documents unless otherwise excluded, amended, modified, or qualified in this specification or applicable purchase document.

4.3.1.1 Component testing. In addition to the quality assurance provisions of the referenced documents, components and materials listed in 3.3.1. and 3.3.2 shall be tested for the characteristics shown in Table VIII. Each lot of material shall be tested. The sample unit shall be 1 linear yard (see 4.4.1.3). All test reports shall contain the individual values utilized in expressing the final result. The inspection level shall be S-1 in accordance with ANSI ASQC Z1.4. The lot shall be unacceptable if one or more sample units fail to meet any requirement specified.

Downloaded from http://www.everyspec.com

TABLE VIII. Component Tests

Characteristic	Requirement	Test Method
Body Material:		
HFC43-10 adsorption	3.3.1.1	Table X, Note 3
Lining fabric:		
Type of knit	3.3.2	Visual
Weight	3.3.2	ASTM D 3776
Breaking strength	3.3.2	ASTM D 5035
Breaking Elongation	3.3.2	ASTM D 5035

4.3.1.2 Component and material certification. Certificates of compliance shall be submitted for the barrier bag material requirements specified in Table VII."Certificate of compliance may be acceptable as evidence that the garment components are as specified in 3.3.3, 3.3.4, 3.3.5, 3.3.6 and 3.3.7." The Government reserves the right to inspect such items to determine the validity of the certification.

4.3.2 End item critical defect examination. Prior to performing the end item sampling examination required in 4.3.3, the underwear shall be 100 percent examined for the critical defects listed in Table IX. This 100 percent critical defect examination shall become a part of the contractor's inspection system or quality program. The presence of any critical defect shall be cause for rejection of the item.

4.3.3 End item visual examination. The underwear shall be examined for the defects listed in Table IX. The lot size shall be expressed in units of undershirts or drawers in accordance with ANSI/ASQC Z1.4. The sample unit shall be one undershirt or drawers. The inspection level shall be II. The presence of any critical defects shall be cause for rejection of the lot.

TABLE IX. End Item Visual Defects

Examine	Defect	Classification		
		Critical	Major	Minor
Material Defects	Any hole, cut, tear, or delamination	1		
	Imbedded matter greater than 1/4 inch in diameter		101	
	Lump greater than 1/2 inch in diameter			201
	Permanent set-in crease or wrinkle		102	
	Excessive coating, coating bands or stop marks		103	
	Any spot or stain greater than 1 inch			202
	Material puckered			203
	Abrasion mark which extends partially through material or thin place	2		

Downloaded from http://www.everyspec.com

TABLE IX. End Item Visual Defects cont'd

Seams and stitching	Needle chew and/or needle cutting	3		
	Loose or tight tension over 1/2 inch		104	
	Loose or tight tension over 1/4 to 1/2 inch			
	For 607 stitch – cover stitch or bottom looper missing:			204
	- more than 1/2 inch	4		
	- up to 1/2 inch		105	
	End of stitching when not caught in another seam or stitching not backstitched or any part of underwear badly pleated, caught or twisted in any unrelated row of stitching		106	
	Broken stitch not repaired as specified			205
	Wrong seam Type	5		
	Wrong stitch Type	6		
	Stitches per inch – more or less than specified		107	
	Open seam:			
	- any broken stitches or continuous skipped or runoff stitches more than 1/4 inch	7		
	- any broken stitches or continuous skipped or runoff stitches up to 1/4 inch		108	
	Raw edge 1/2 inch or more in length			206
Slide fastener	Any part of slide fastener defective affecting function.	8		207
	Thong not attached as specified		109	
	Fastener tape cut or torn			208
	Fastener tape puckered			
Hook and loop tape	Out of alignment by more than 1/4 inch		110	
	Not able to fasten properly		111	
	Width or length not as specified			209
	Damaged, defective or frayed, affecting function		112	

Downloaded from http://www.everyspec.com

TABLE IX. End Item Visual Defects cont'd

MCG opening	Missing Misplaced or out of alignment MGC backing poorly shaped, puckered or twisted Width of opening less than 2-7/8 inches or more than 3-1/8 inches Welts less than 3/16 inch or more than 5/16 inch wide	9	 113 114 115	 210
Operation	Any operation omitted or improperly performed		116	
Components	Any component part missing, improperly fabricated Storage bag missing		117 118	
Cleanliness	Any spot, dirt, or stain (grease, oil, ink etc) greater than 1 inch Five or more thread ends or more than 3/8 inch Two or more in-process tickets or loose threads not removed Note: Stains attributed to charcoal contents shall not be scored.			211 212 213

4.3.4 End item dimensional examination. The end items shall be examined for conformance to dimensions specified in Tables V and VI. Any dimension deviation from the specified requirement and tolerance shall be Classified as a defect. The lot size shall be expressed in units of undershirts and drawers. The sample unit shall be one undershirt or drawers. The inspection level shall be S-2 in accordance with ANSI/ASQC Z1.4.

4.3.5 End item testing. Samples of the undershirt or drawers shall be submitted to the Government for acceptance testing for the characteristic specified in Table X (see 6.6). The lot size shall be expressed in units of undershirts or drawers. The sample unit shall be one undershirt or drawers. Any test failure shall be cause for rejection of the lot. The sample size shall be in accordance with the following:

Lot size (suits)	Sample size (each)
Less than 500	3
501 and over	5

Downloaded from http://www.everyspec.com

TABLE X. End Item Testing

Characteristic	Requirement paragraph	Test method	No. of determinations per sample unit	Results reported to nearest
HFC43-10 Adsorption	3.3.1.1	1/	2/ 3/	0.1 mg/cm^2

1/ The test procedure shall be as specified in 4.4.1, except that the test samples shall be conditioned in an air circulating oven at 50% relative humidity for at least 3 hours and that no individual sample determination shall be less than 1.8 mg/cm^2.

2/ A sample of seamless chemical protective underwear (CPU) material shall be taken from an area adjacent to each of the following areas of the undershirt and drawers:

Undershirt
a. Underarm near sleeve, side and armhole seams. (Do not take samples from the sleeve).
b. Top of the shoulder near shoulder, armhole and sleeve seams. (Do not take samples from the sleeve.)

Drawers
a. Crotch near crotch, seat and inseams.
b. Side seam midway between the top of the waist and the top of the knee.

3/ Body Material – Each lot of fabric shall be tested (see 4.4.1 and Table X). The sample unit shall be 1 linear yard (see 4.4.1.3).

4.3.6 Packaging (Stability) examination.

4.3.6.1 Bagging examination. Each filled and sealed bag shall be examined for the defects listed below. The finding of any defect shall be cause for rejection of the bagged undershirt or drawers. Undershirt or drawers from rejected bags (except for damaged items) may be rebagged as specified in 3.9 and resubmitted for examination.

Defect

Closure seal width not as specified
Tear, cut, or hole in unit pack
Closure seal not continuous
Undershirt or drawers damaged by heat seal

4.3.6.2 Seam strength test. Filled and sealed unit packs shall be tested as specified in 4.4.2 for conformance to closure seam strength required in 3.9. Lot size shall be expressed in unit packs. The sample unit pack shall be one bagged undershirt or drawers. The inspection level shall be S-2 in accordance with ASQC Z1.4. Any failure shall result in rejection of the lot.

4.3.6.3 Unit pack leak examination. Every sealed unit pack, prior to packing shall be examined as specified in 4.4.3 for conformance to the unit-packing requirements of 5.1.1.1. Any failure shall be opened and repacked as specified in 5.1.1.1 and reexamined as above.

Downloaded from http://www.everyspec.com

4.3.6.4 Packaging examination. The fully packaged end items shall be examined for marking as specified in 3.3.10 (see 6.2).

4.4 Methods of inspection.

4.4.1 HFC43-10 adsorption. (see Table X)[dec1].

4.4.1.1 Apparatus and reagents.

4.4.1.1.1 Vapor generator. Any apparatus can be used that generates a gas mixture of HCF43-10 with nitrogen, at the rate of 10 mg of HFC43-10 per minute. Once established, the rate is maintained at 10 ± 0.2 mg/minute.

4.4.1.1.2 Challenge flow. Prepurified nitrogen shall be used as the diluent gas for the concentrated HFC43-10 vapor generated. The total flow rate of 1.0 liter/minute through each sample test cell must be maintained at ± 0.03 liter/minute. The rate of flow can be controlled by use of a mass flow controller or pother suitable flow controlling device.

4.4.1.1.3 Constant temperature device.. The constant temperature device shall be capable of maintaining the sample cell at a temperature of 32.2° ± 2°C.

4.4.1.1.4 Fabric sample cell The fabric sample cell shall conform to the requirement shown in Figure 5 or Figure 6.

4.4.1.1.5 Detector. The detector shall be a gas chromatograph, infrared detector, or other instrument capable of detecting 0.05 mg ± 0.01 mg HFC43-10 per liter.

4.4.1.1.6 Schwartz-Type drying tube. The tube shall be filled with activated charcoal as specified in 4.4.1.1.7, loosely packed, as shown in Figure 9. Glass wool, loosely packed, shall be placed on top of the activated carbon.

4.4.1.1.7 Charcoal, coconut, activated, 6 to 14 mesh.

4.4.1.1.8 Analytical balance.

4.4.1.2 Determination of HFC43-10 concentration.

4.4.1.2.1 Conditioning and tare weight of drying tube. The Schwartz type drying tube, filled with charcoal as shown in Figure 9, shall be weighed and conditioned by exposing it to the challenge flow for ten minutes or more using the apparatus shown in Figure 7 or Figure 8. The drying tube replaces the sample cell for this procedure. Remove the drying tube from the apparatus and weigh to 0.1mg. All newly filled drying tubes must be conditioned. NOTE: The HFC43-10 test vapor must always enter the drying tube through the same stopcock.

4.4.1.2.2 Calibration of HFC43-10 concentration. Pass the diluted HFC43-10 vapor from the generator manifold at a steady rate of 1.0 liter/minute through a tared Schwartz type drying tube. At 20 minutes close the stopcock and remove the Schwartz tube to the weighing balance area. Allow the tube to cool for 10 minutes at ambient temperature. Open and close one stopcock to equalize pressure and weigh to ± 0.1 mg.

4.4.1.2.3 Calculation . The HFC43-10 rate (+ 0.1 mg/minute) is determined by dividing the weight increase (± 0.1 mg) by the sampling time (± 0.1 minutes). Three or more consecutive

Downloaded from http://www.everyspec.com

readings must agree by ± 0.2 mg/minute. The last three calibrations are to be averaged and the average used as the concentration for calibration of the detection instrument.

4.4.1.2.4 Calibration of detection instrument. The detection instrument shall be calibrated at installation and recalibrated in accordance with the manufacturer's recommendation or at a minimum of once a month.

4.4.1.3 Test specimen. The test specimen shall be a circular sample of the finished fabric having the necessary diameter to fit the sample cell. For each 1 yard sample, cut nine equally spaced specimens across the sample.

4.4.1.4 Adsorption test methods.

4.4.1.4.1 Automated adsorption test method.

4.4.1.4.2 Test specimen loading. Aluminum sample holder rings (Figure 10) are used to seal the test specimen in the sample cell (Figure 5). The holder is opened using the special pry tool. Each sample is placed within the holder and the snap-ring is pushed into place. Holders are than placed into the slots of the sample racks (Figure 7) with the snap-ring facing left. Samples shall be placed in the holder so that the face of the fabric shall be exposed to the challenge inlet side of the sample cell.

4.4.1.4.3 Automated procedure. The system is assembled as shown in Figure 7, powered up, the automation software loaded into the computer, and the program executed.

4.4.1.4.4 Software options.

Number of samples – operator determined
Name of sample – operator determined
Drying time – 5 minutes
Sampling time – once every minute
Duration of test – 25 minutes
Flushing time – 3 minutes

4.4.1.4.5 Determination of breakthrough time. The breakthrough time is determined by interpolation between the first data point where the effluent concentration goes above 0.1 mg HFC43-10 per liter and its immediate predecessor, to determine the time at which the effluent concentration is 0.1 mg/liter.

4.4.1.4.6 Determination of HFC43-10 adsorption values. Import the ASCII print file produced by the detector to an Excel or equivalent spreadsheet and follow the instructions on the worksheet to calculate the sorption values for each individual sample. The sorption values for each sample are transferred to a summary sheet, ready for hard copy.

4.4.1.4.7 Calculations. The HFC43-10 sample adsorption can also be calculated as follows:

$$mg/cm^2 = \frac{T \times R}{A}$$

Where: T = break time (run time to reach an effluent concentration of 0.1.mg HFC43-10 per liter, accurate to 0.1 minutes).
R = mg HFC43-10/minute (accurate to 0.1mg.min)
A = exposed areas of test specimen (nominal area is 100±20 cm^2). Actual exposed area of automated cell is 83.3 cm^2.

Downloaded from http://www.everyspec.com

4.4.1.5 Manual adsorption test method.

4.4.1.5.1 Flushing lines and detector. Close the vapor generator mass flow controller (Figure 8) and by-pass the sample cell with inert tubing (glass, neoprene, butyl, etc.). Run the nitrogen dilution gas to flush the system lines and detector until the detector indicates less than 0.1 mg if HFC43-10 per liter.

4.4.1.5.2 Test specimen loading. Place the specimen in the sample cell, with the face of the fabric towards the challenge inlet, and screw the clamping ring (Figure 6) tight, using a pronged lever inserted into the indentations in the ring, or similar means.

4.4.1.5.3 Detector sampling frequency. Set the detector to sample the effluent stream at least once per minute.

4.4.1.5.4 Insertion of sample cell into the system. Connect the input and effluent streams to the sample cell (Figure 6) and place the sample cell in the constant temperature device.

4.4.1.5.5 Flushing of specimen. Flush the specimen with dry nitrogen for three minutes.

4.4.1.5.6 Manual procedure. Turn on the detector and the vapor generator mass flow controller simultaneously. When the detector indicates that the effluent concentration is greater than 0.1 mg of HFC43-10 per liter, disconnect the sample cell and replace with inert tubing to flush the lines and the detector.

4.4.1.5.7 Determination of breakthrough time. The breakthrough time is determined by interpolation between the first data point where the effluent concentration goes above 0.1 mg of HFC43-10 per liter and its immediate predecessor, to determine the time at which the effluent concentration is 0.1 mg/liter.

4.4.1.5.8 Calculations. The HFC43-10 sample adsorption shall be calculated as follows:

$$mg/cm^2 = \frac{T \times R}{A}$$

Where: T = break time (run time to reach an effluent concentration of 0.1.mg HFC43-10 per liter, accurate to 0.1 minutes).

R = mg HFC43-10/minute (accurate to 0.1mg.min)

A = exposed areas of test specimen (nominal area is 100 ± 20 cm^2). Actual exposed area of automated cell is 83.3 cm^2.

4.4.2 Seam strength test. Seam strength shall be tested in accordance with ASTM F 88.

4.4.3 Leakage examination. Each unit pack shall be examined for leaks. The packs shall be inspected 24 - 48 hours after being sealed and shall be visually and manually examined for loss of vacuum. Any soft pack is considered a failure.

Downloaded from http://www.everyspec.com

5. PACKAGING

5.1 Packaging. For acquisition purposes, the packaging requirements shall be specified in the contract or order (see 6.2). When actual packing of material is to be performed by DoD personnel, these personnel need to contact the responsible packing activity to ascertain requisite packaging requirements. Packaging requirements are maintained by the Inventory Control Point's Packaging activity within the Military Department or Defense Agency, or within the Military Department's System Command. Packaging data retrieval is available from the managing Military Department or Defense Agency's automated packaging files, CD-ROM products, or by contacting the responsible packaging activity.

6. NOTES

(This section contains information of a general or explanatory nature that may be helpful, but is not mandatory.)

6.1 Intended use. The underwear, undershirt and drawers, is intended for use by aviation and combat personnel to provide protection against battlefield or depot concentrations of chemical agents in liquid and vapor form; 12 hours of protection for up to 15 continuous days of wear. "The CPU/mCPU should not be worn by itself but part of an ensemble."

6.2 Acquisition requirements. Acquisition documents must specify the following:

a. Title, number, and date of this specification.
b. Special provisions for verification inspection of Life Support Clothing and Equipment (see 1.1).
c. Type and size required (see 1.2).
d. Issue of DODISS to be cited in the solicitation, and if required, the specific issue of individual documents referenced (see 2.1.1 and 2.2).
e. When a first article is required (see 3.1, 4.2, and 6.3).
f. Inspection levels, acceptance criteria (AQLs) where required for lot sampling
g. Address to which garment should be forwarded for governmental acceptance tests.
h. Packaging and contract data marking requirements (see 3.3.10).
i. Surveillance marking requirements (see 3.3.9).

6.3 First article. When a first article is required, it will be inspected and approved under the appropriate provisions of FAR 52.209-4. The first article should be a pre-production sample. The contracting officer should specify the appropriate Type of first article and the number of units to be furnished. The contracting officer should include specific instructions in acquisition documents regarding arrangements for selection, inspection, and approval of the first article. (see 3.1)

6.4 Sample. For access to a sample of the end item, address the contracting activity issuing the invitation for bids.

6.5 Shelf-life. The end item has been designated as a Type II shelf-life item (3 year extendible, maximum 12 year shelf-life) IAW AR 700-89.

Downloaded from http://www.everyspec.com

6.6 Surveillance program. Items to be set aside for surveillance: Five (5) undershirts or five (5) drawers from each lot should be shipped separately to the address below and the point of contact stated in the contract:

SPECIAL PROJECTS
PROJECT CODE R4J-BLVD. 1341
814 RADFORD BLVD.
MARINE CORPS LOGISTICS BASE
ALBANY, GA 31704

6.7 Warning.

6.7.1 Protection of in-process and processed goods. In-process and processed goods should be protected from exposure to chemical vapors such as solvents to prevent contamination of the activated carbon.

6.7.2. Personnel protection . During the handling of the charcoal containing material used in fabricating the chemical protective undershirt, the Charcoal dust may collect in various places; for example, on the skin of the personnel, particularly on the hands, and on sewing machines and cutting Tables. Respiratory protection may be required due to charcoal dust generation. Personnel should wear gloves and protective clothing when handling the material. Chemical safety goggles should be worn whenever eye contact may occur. Personnel will not wear contact lens. Also, washing facilities and eyewash stations should be available in the work areas.

6.7.3 HFC43-10 use. Effluent HFC43-10 vapors from the apparatus should be vented in a ventilation hood. Consult the Material Safety Data Sheet (MSDS) for safe handling procedures.

6.8 Sources of supply. Micro Care Marketing Services is the sole distributor of the DuPont Vertrel® products in North America.

6.8.1 This document super seeds CN/PD-03-07 UNDERWEAR, CHEMILAL PROTECTIVE, TWO PIECE.

HFC43-10 (trade name Vertrel XF) source of supply.

Micro Care Marketing Services
34 Ronzo Road
Bristol, CT 06010
Tele: 1-800-595-4525
Email: Tech Support@VertrelSolvents.com

For body material

Xymid, LLC
220 GBC Drive
Newark, DE 19702
302-451-3060

Downloaded from http://www.everyspec.com

6.9 Subject (key word) listing.

Chemical warfare agent
Combat
LSC&E
Protection
Undergarment

Custodians:
Army – GL

Preparing Activity
DLA-CT

Project Number
8415-0259

Downloaded from http://www.everyspec.com

INSTRUCTIONS FOR DONNING THE CHEMICAL PROTECTIVE UNDERGARMENT

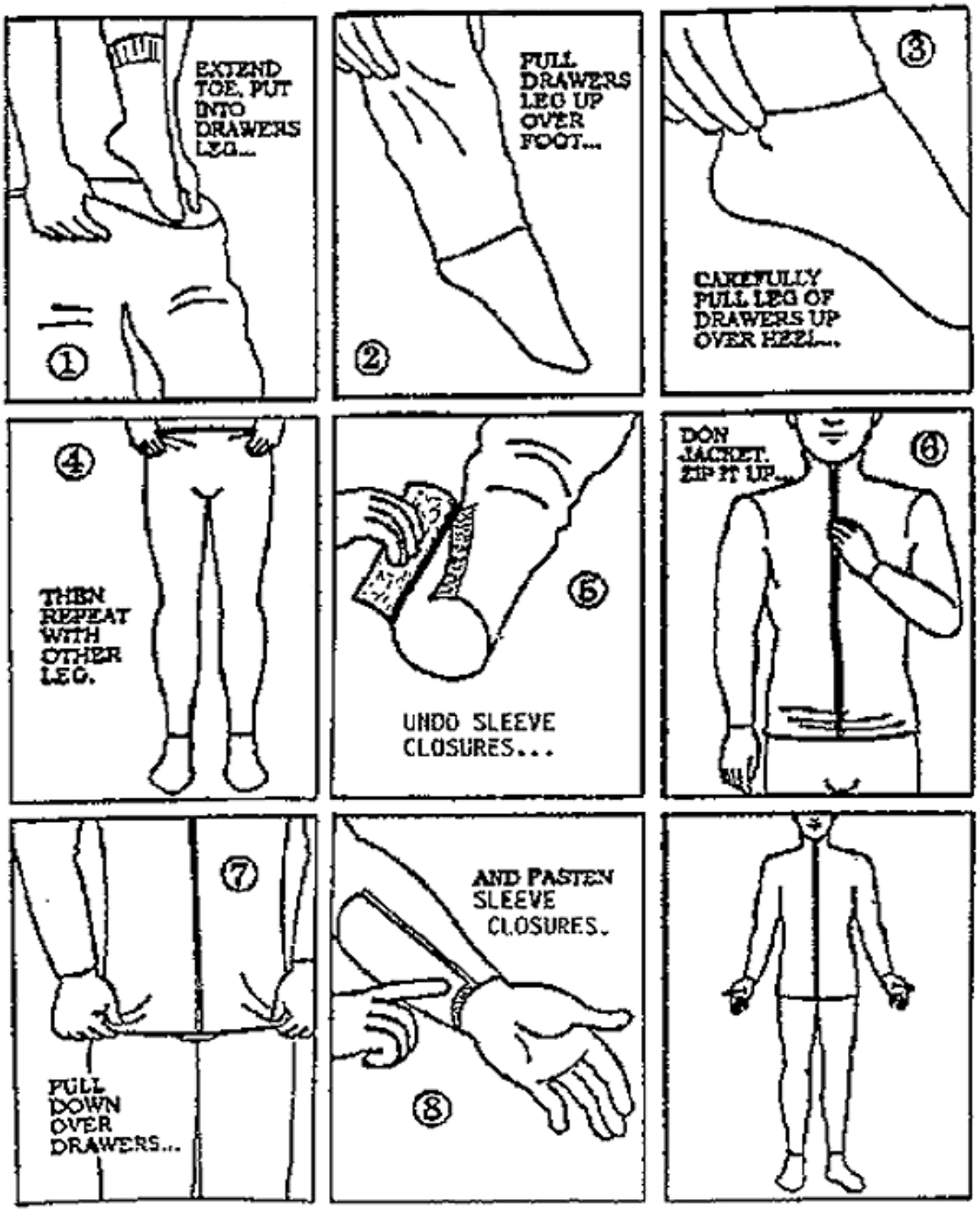

FIGURE 1 – Instruction Sheet

Downloaded from http://www.everyspec.com

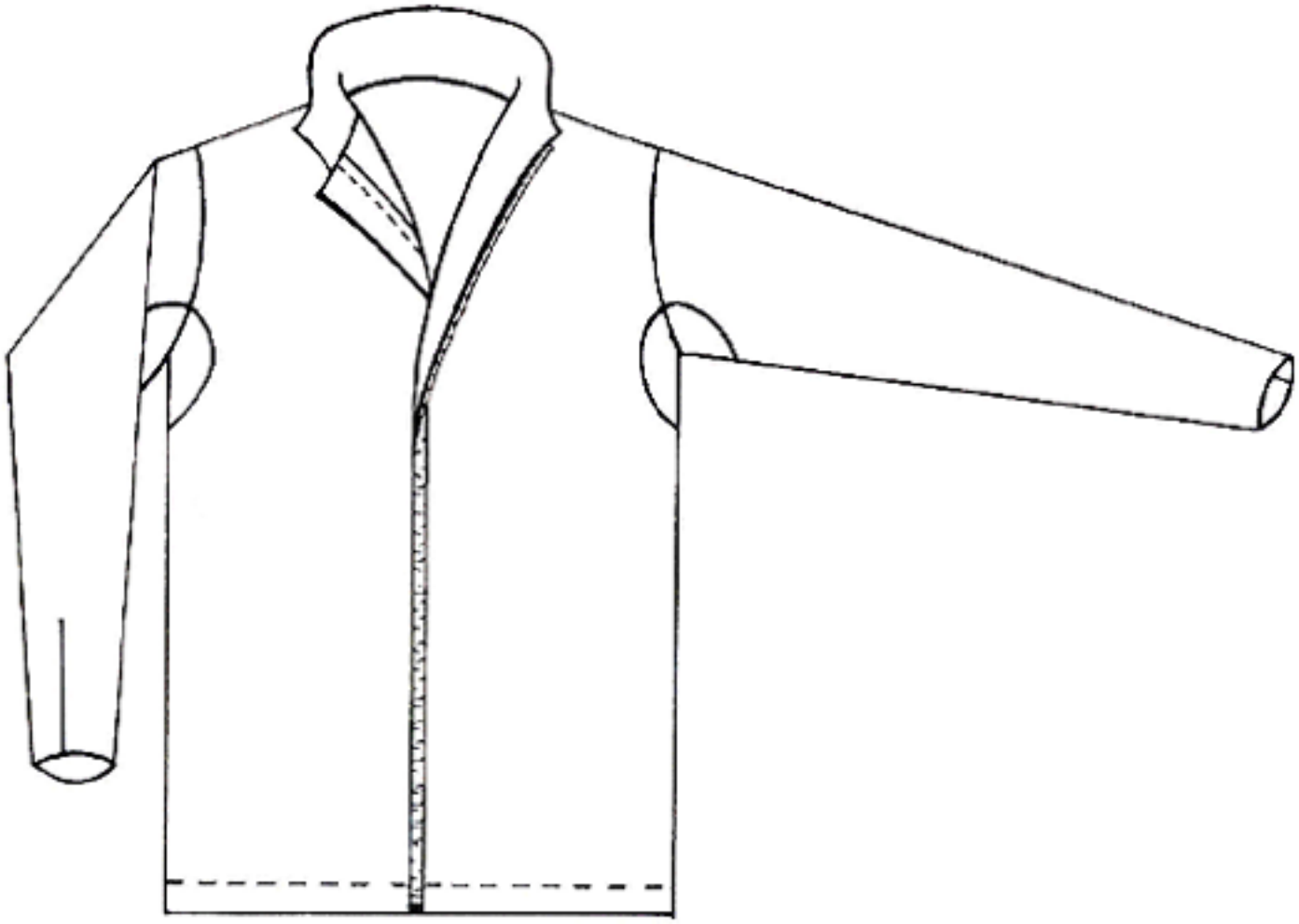

FIGURE 2a – Chemical Protective Undershirt; Type I Configuration

Downloaded from http://www.everyspec.com

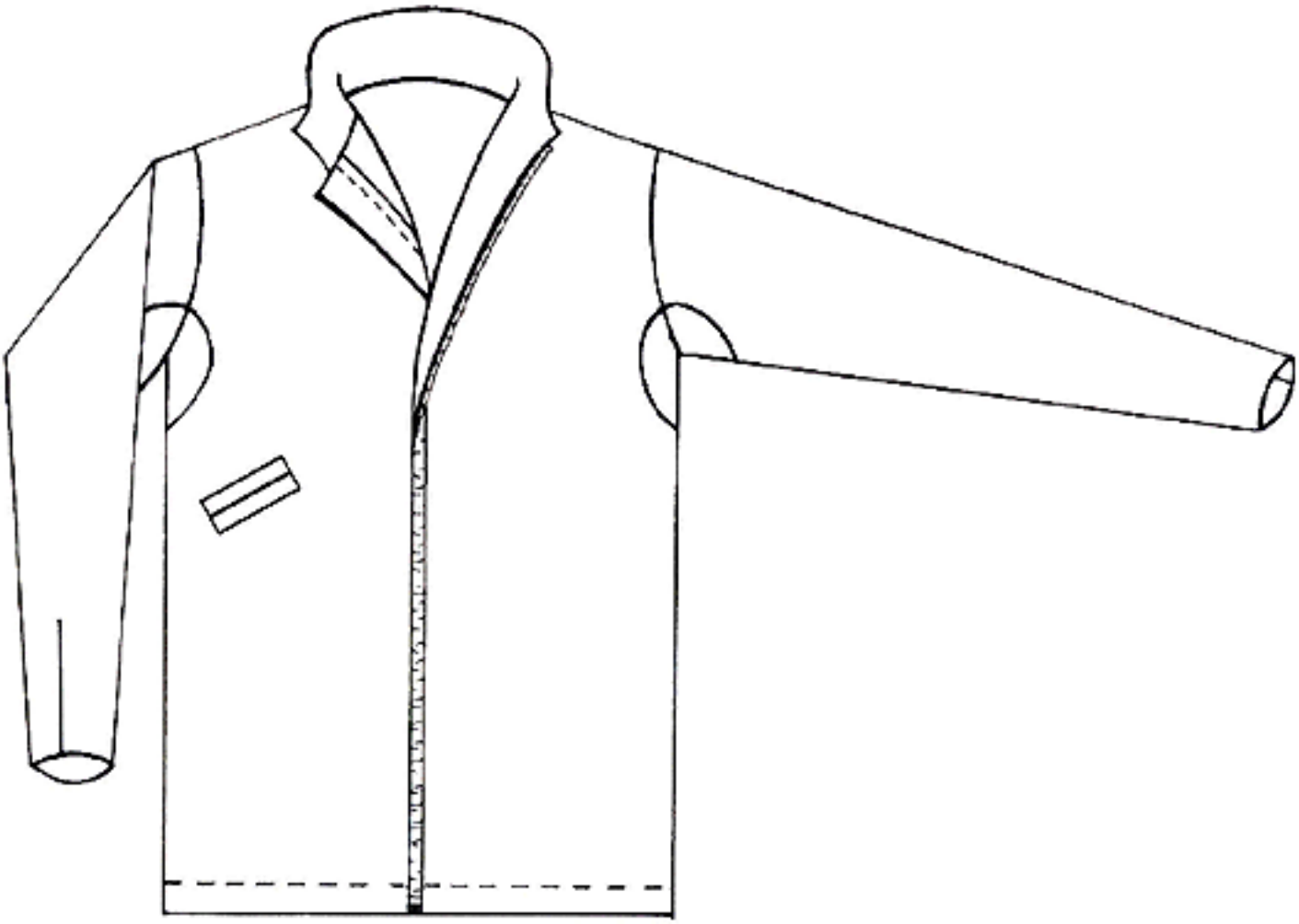

FIGURE 2b – Chemical Protective Undershirt; Type II Configuration

Downloaded from http://www.everyspec.com

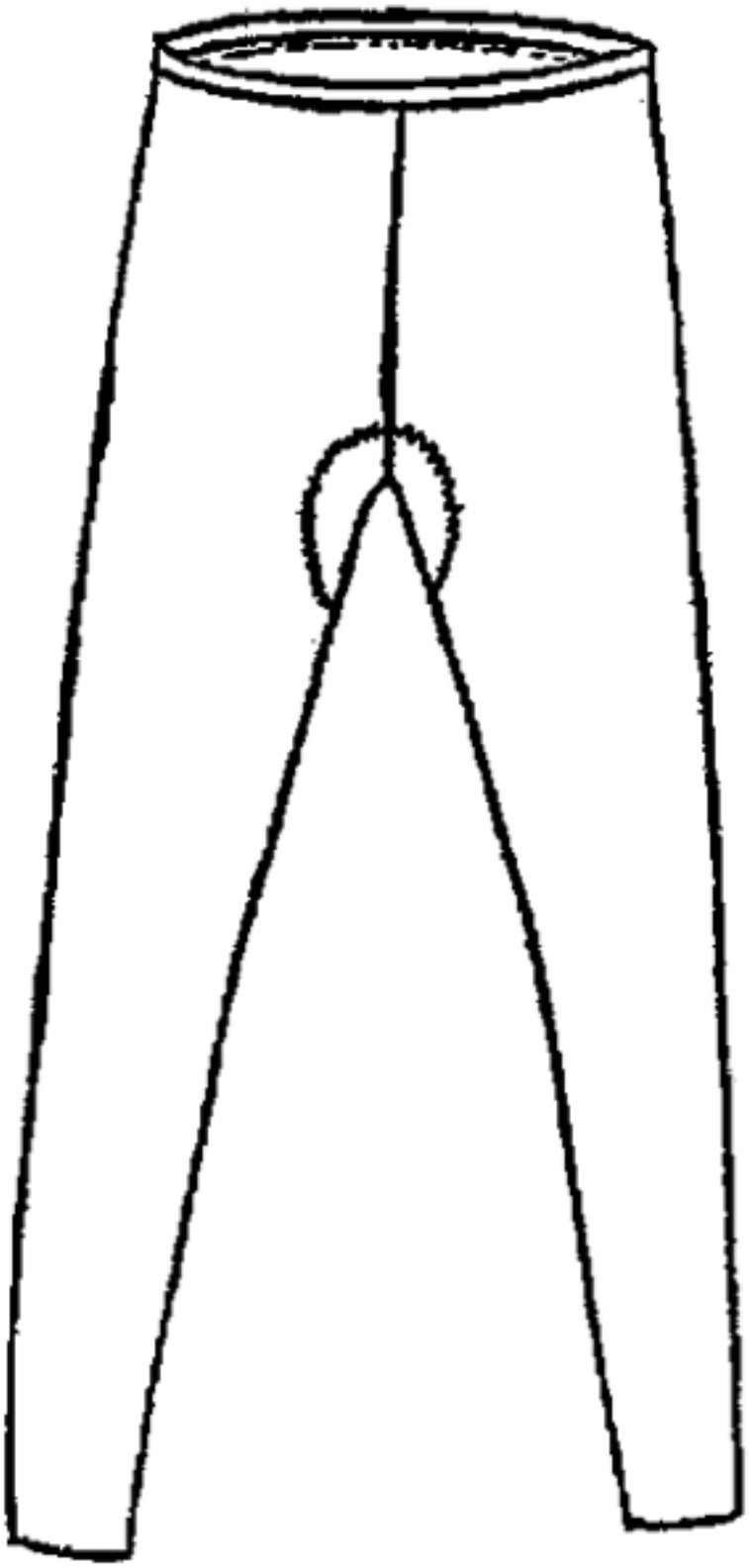

FIGURE 3 - Chemical Protective Drawers

Downloaded from http://www.everyspec.com

SIZE PREDICTION TABLE FOR UNDERWEAR, CHEMICAL PROTECTIVE:

UNDERSHIRT

Chest Size (Inches)	Corresponds To Shirt Size
< 30	30
31-32	32
33-34	34
35-36	36
37-38	38
39-40	40
41-42	42
43-44	44
45-46	46
47-48	48
49-50	50
51-52	52
53-54	54

NOTE: If individual's hip measurement is larger than chest measurement, use hip measurement to select size.

DRAWERS

Waist Size (Inches)	Seat	Corresponds To Waist Size
25-26	34	26
27-28	36	28
29-30	38	30
31-32	40	32
33-34	42	34
35-36	44	36
37-38	46	38
39-40	48	40
41-42	50	42
43-44	52	44
45-46	54	46
47-48	56	48

NOTE: If individual's seat measurement is larger than the size indicated, select the next larger seat drawer size.

FIGURE 4 – Chemical Protective Underwear Prediction Table

Downloaded from http://www.everyspec.com

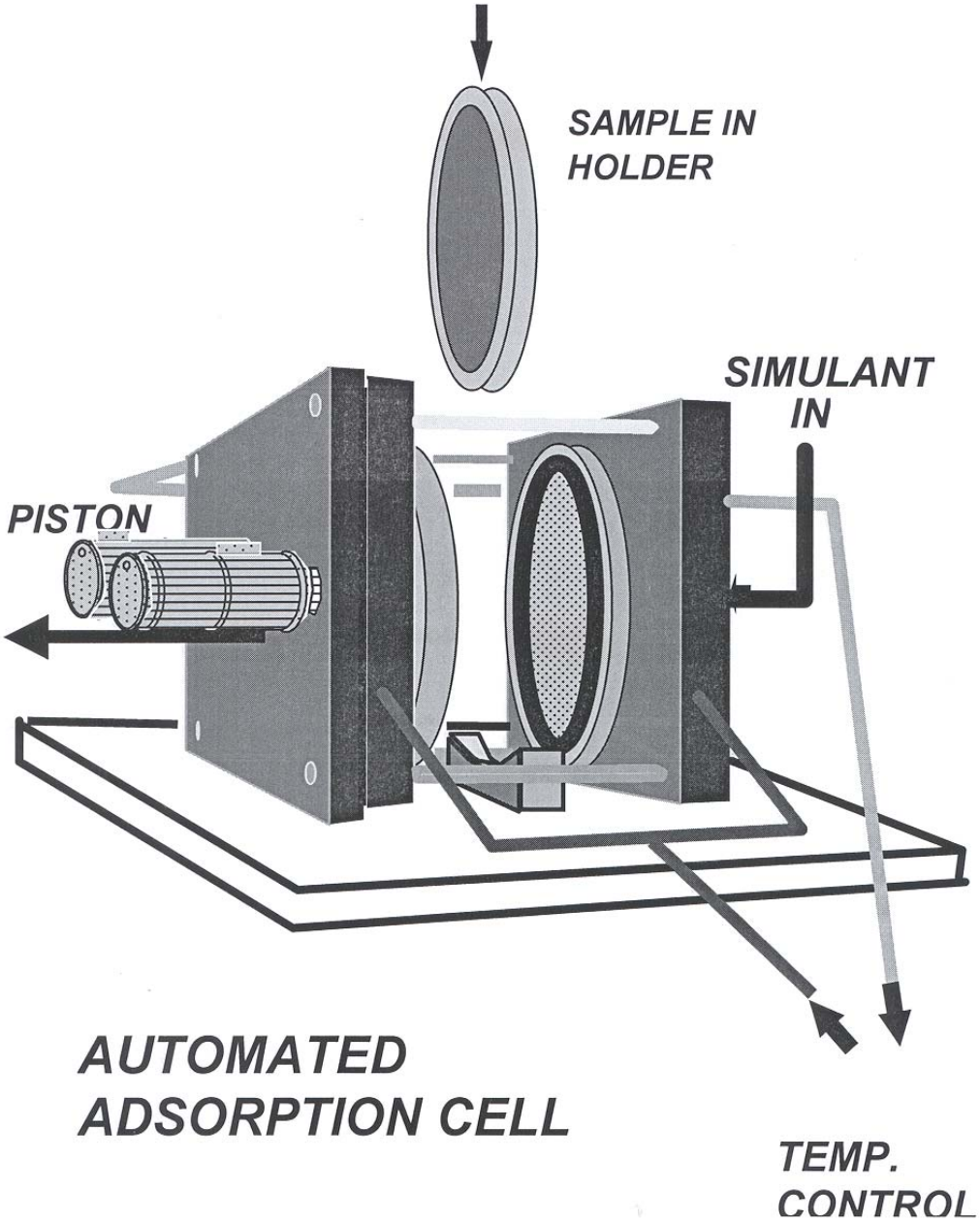

IGURE 5 - Automated Adsorption Cell

Downloaded from http://www.everyspec.com

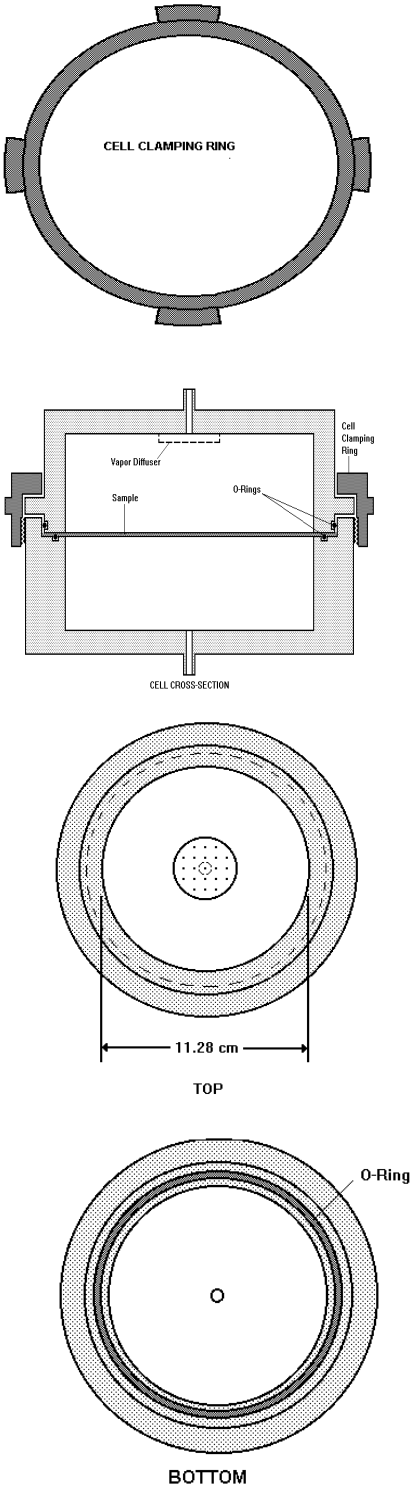

FIGURE 6 Manual Adsorption Cell

Downloaded from http://www.everyspec.com

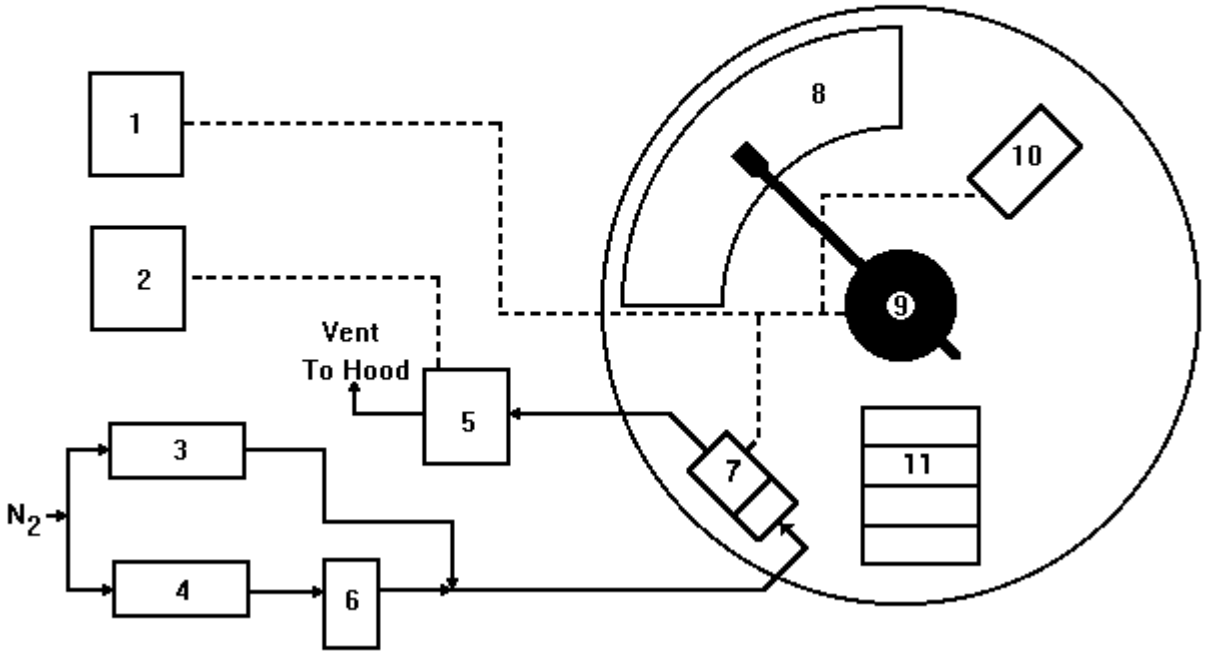

1. Computer control of robotics includes computer, Power & Event Controller, and System V Controller.
2. Computer control of, and data acquisition from MTI (Hewlett Packard) gas chromatograph.
3. Mass Flow Controller (MFC) for dilution Nitrogen.
4. MFC for Nitrogen flowing to HFE43-10 vapor generator.
5. MTI gas chromatograph.
6. HFE43-10 vapor generator.
7. Sample cell under robotics control.
8. Sample rack.
9. Robot.
10. Heater/Blower for drying samples.
11. Sample disposal bin.

FIGURE 7: Automated Adsorption Test Assembly

Downloaded from http://www.everyspec.com

MANUAL ADSORPTION SYSTEM

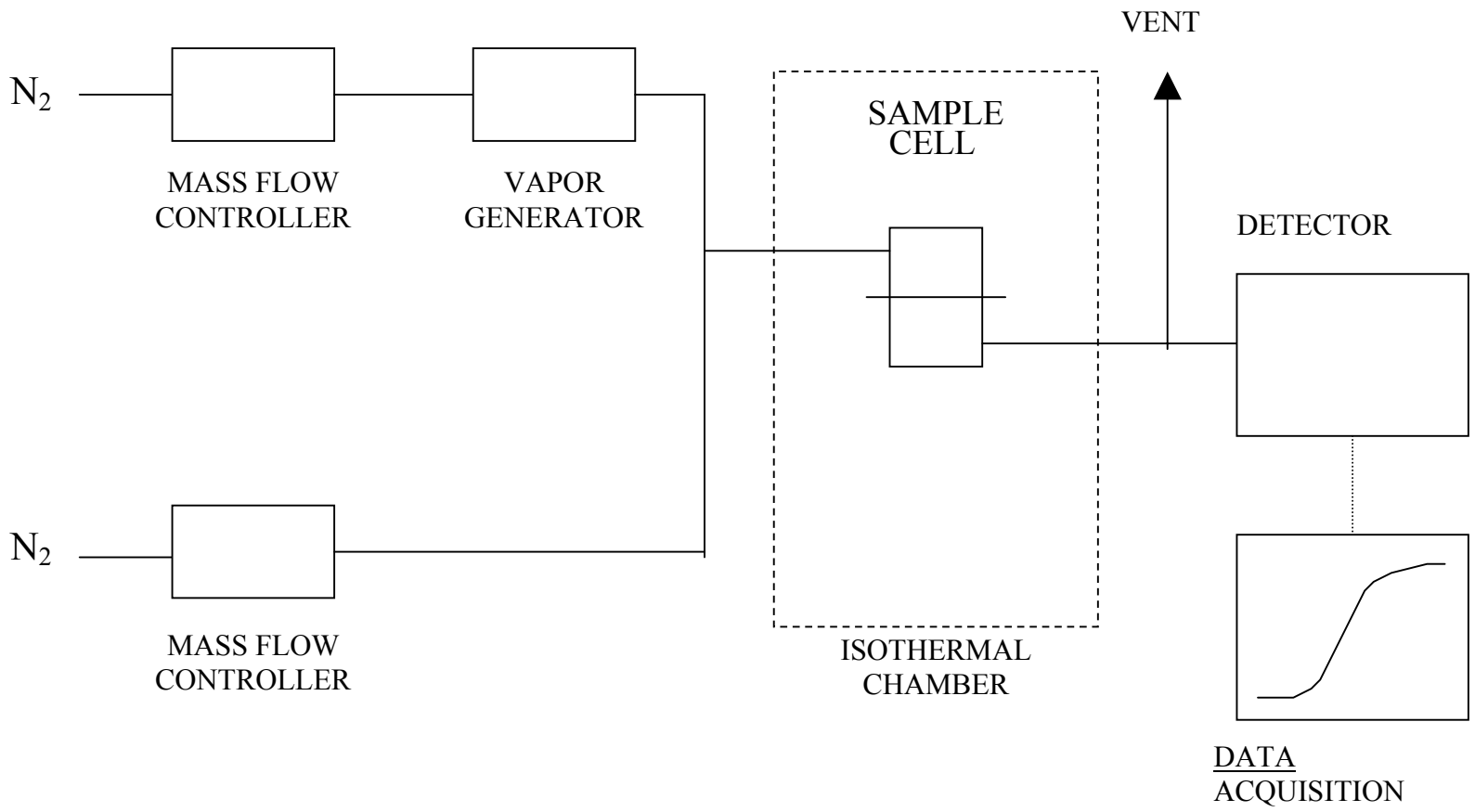

FIGURE 8 - Manual Adsorption System

Downloaded from http://www.everyspec.com

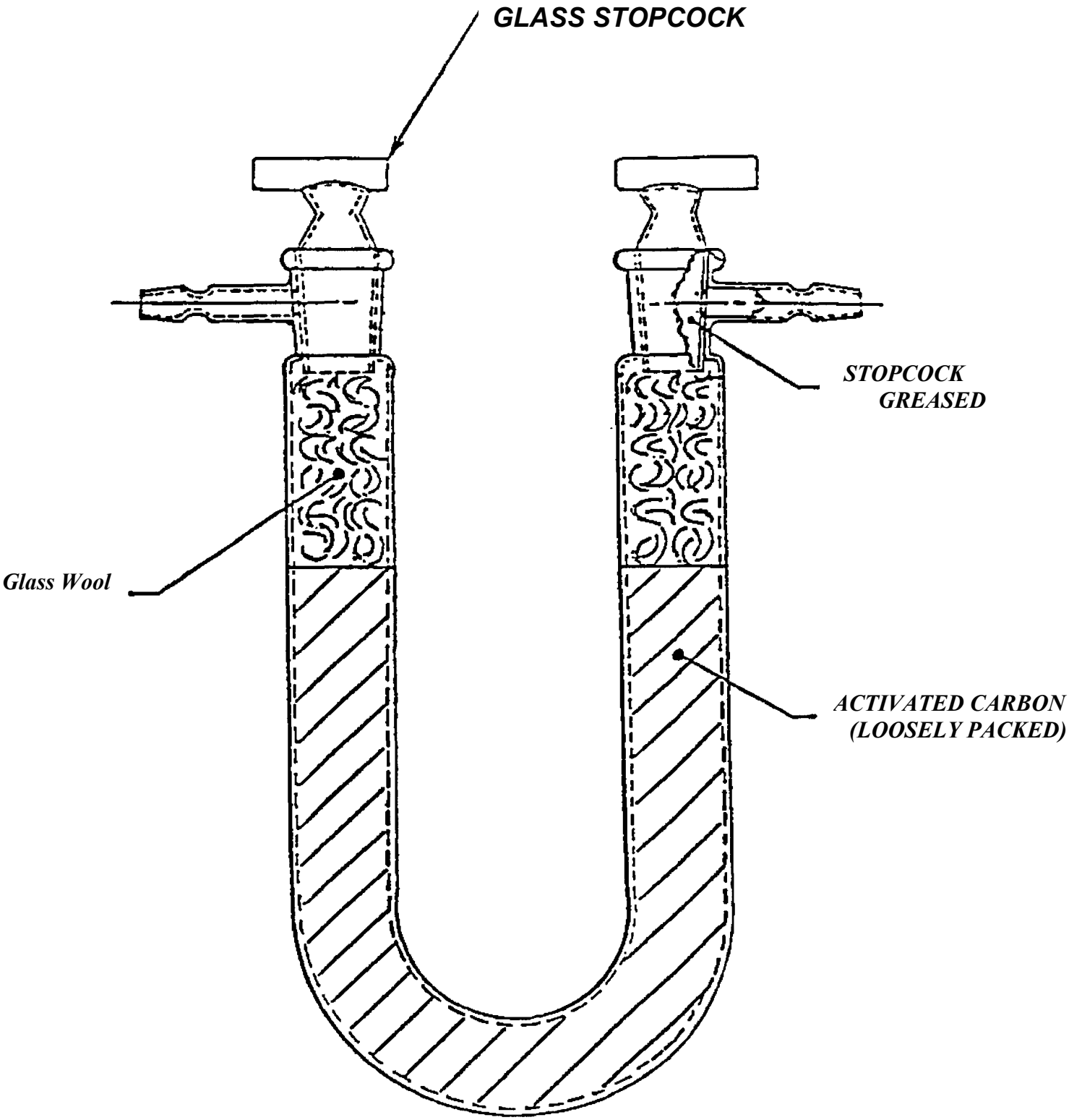

FIGURE 9 – Schwartz Type Drying Tubes

Downloaded from http://www.everyspec.com

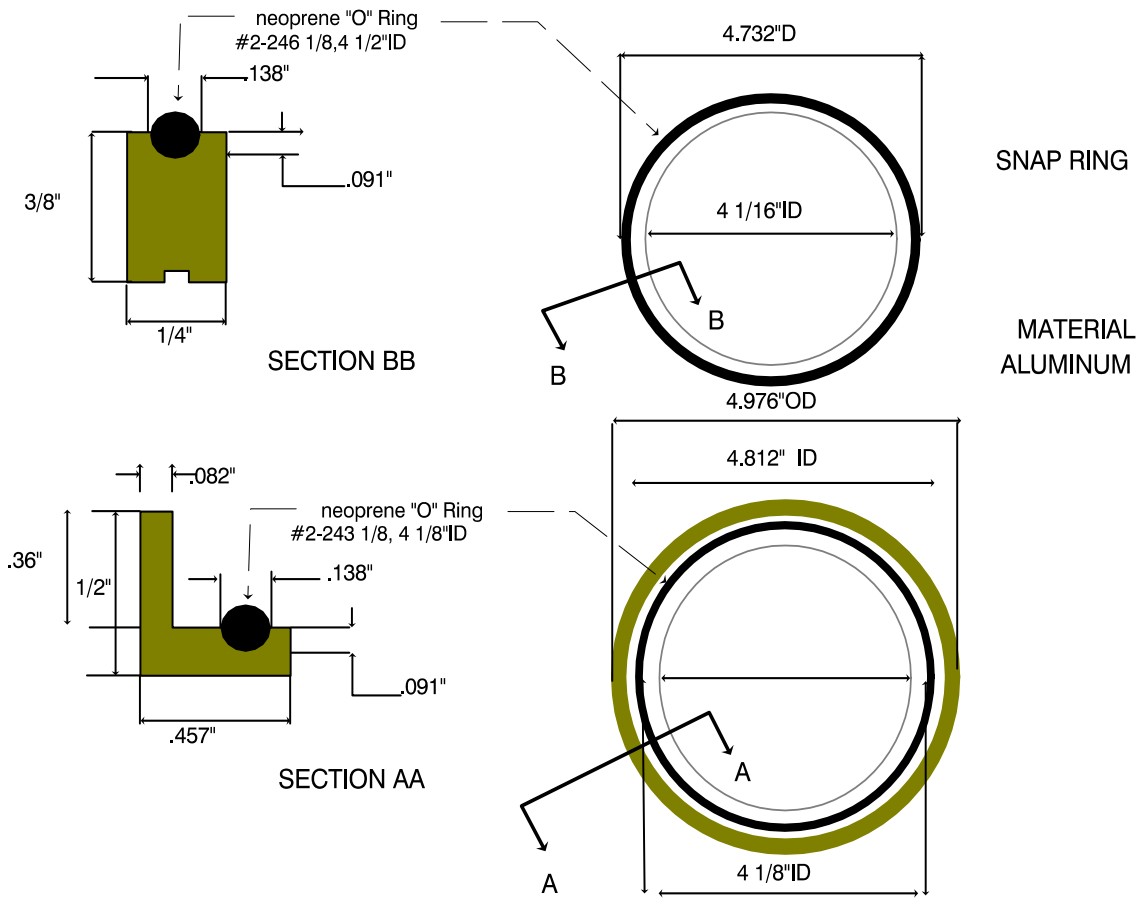

FIGURE 10: <u>Sample Holder</u>

Downloaded from http://www.everyspec.com

STANDARDIZATION DOCUMENT IMPROVEMENT PROPOSAL

INSTRUCTIONS

1. The preparing activity must complete blocks 1, 2, 3, and 8. In block 1, both the document number and revision letter should be given.

2. The submitter of this form must complete blocks 4, 5, 6, and 7, and send to preparing activity.

3. The preparing activity must provide a reply within 30 days from receipt of the form.

NOTE: This form may not be used to request copies of documents, nor to request waivers, or clarification of requirements on current contracts. Comments submitted on this form do not constitute or imply authorization to waive any portion of the referenced document(s) or to amend contractual requirements.

I RECOMMEND A CHANGE:	**1. DOCUMENT NUMBER** MIL-DTL-32130	**2. DOCUMENT DATE (YYYYMMDD)** 20030812

3. DOCUMENT TITLE **UNDERWEAR, CHEMICAL PROTECTIVE, TWO PIECE (UNDERSHIRT and DRAWERS**

4. NATURE OF CHANGE *(Identify paragraph number and include proposed rewrite, if possible. Attach extra sheets as needed.)*

5. REASON FOR RECOMMENDATION

6. SUBMITTER

a. NAME *(Last, First, Middle Initial)*	b. ORGANIZATION	
c. ADDRESS *(Include Zip Code)*	d. TELEPHONE (Include Area Code) (1) Commercial (2) AUTOVON *(if applicable)*	**7.DATE SUBMITTED** (YYYYMMDD)

8. PREPARING ACTIVITY

a. NAME Defense Supply Center Philadelphia Attn: Trina Gooding (Clothing & Textiles)	b. TELEPHONE *Include Area Code)* (1) Commercial (215) 737-0559 (2) AUTOVON 444-0559
c. ADDRESS *(Include Zip Code)* 700 Robbins Avenue Philadelphia, Pennsylvania 19111-5092	**IF YOU DO NOT RECEIVE A REPLY WITHIN 45 DAYS, CONTACT:** Defense Standardization Program Office (DLSC-LM) 8725 John J. Kingman road, Suite 2533 Ft. Belvoir, VA 22060-2533 Telephone (703) 767-6888 AUTOVON 427-6888