INCH-POUND

MIL-DTL-32027(OS)
22 October 1998

DETAIL SPECIFICATION

GENERATOR, GAS, DRY BAY FIRE EXTINGUISHER, GGU-15A/A

This specification is approved for use by the Naval Sea Systems Command, Department of the Navy, and is available for use by all Department and Agencies of the Department of Defense.

1. SCOPE

1.1 Scope. This specification covers the requirements for the manufacture and acceptance of the Dry Bay Fire Extinguisher Gas Generator, GGU-15A/A, referred to herein as "gas generator".

2. APPLICABLE DOCUMENTS

2.1 General. The documents listed in this section are specified in sections 3 and 4 of this specification. This section does not include documents cited in other sections of this specification or recommended for additional information or as examples. While every effort has been made to ensure the completeness of this list, document users are cautioned that they must meet all specified requirements documents specified in sections 3 and 4 of this specification, whether or not those documents are listed in this section.

2.2 Government documents.

2.2.1 Specifications, standards, and handbooks. The following specifications, standards, and handbooks form a part of this document to the extent specified herein. Unless otherwise specified, the issues of these documents are those listed in the issue of the Department of Defense Index of Specifications and Standards (DODISS) and supplements thereto, cited in the solicitation (see 6.2).

SPECIFICATIONS

DEPARTMENT OF DEFENSE

MIL-D-21625	Design and Evaluation of Cartridges for Cartridge Actuated Devices
MIL-I-23659	Initiators, Electrical, General Design Specification for

Beneficial comments (recommendations, additions, deletions) and any pertinent data which may be of use in improving this document should be addressed to: Commander, Indian Head Division, Naval Surface Warfare Center, Standardization Team (Code 840M), 101 Strauss Avenue, Indian Head, MD 20640-5035, by using the self addressed Standardization Document Improvement Proposal (DD Form 1426) appearing at the end of this document or by letter.

AMSC N/A FSC 1377

STANDARDS

DEPARTMENT OF DEFENSE

MIL-STD-202	Test Methods for Electronic and Electrical Component Parts
MIL-STD-1168	Ammunition Lot Numbering

(Unless otherwise indicated, copies of Federal and Military specifications and standards are available from: Standardization Documents Order Desk, Bldg. 4D, 700 Robbins Avenue, Philadelphia, PA 19111-5094)

2.2.2 Other Government documents, drawings, and publications. The following other Government documents, drawings, and publications form a part of this document to the extent specified herein. Unless otherwise specified, the issues are those cited in the solicitation (see 6.2).

DRAWINGS

NAVAL AIR SYSTEMS COMMAND (CAGE Code 30003)

838AS243	Generator, Gas, Dry Bay Fire Extinguisher, GGU-15A/A
838AS254	Cover, Electrical Connector, Gas Generator Assembly (for Helium Leak Test)
3205AS191	Test Fixture Assembly (100 ± 0.5 Liter)
3205AS199	Container, Shipping and Storage, Gas Generator
3205AS216	Vibration/Shock Plate and Gas Generator Assembly

(Application for copies should be addressed to the Commanding Officer, Naval Inventory Control Point, 5801 Tabor Avenue, Philadelphia, PA 19120-5099.)

2.3 Non-Government publications and drawings. The following documents form a part of this document to the extent specified herein. Unless otherwise specified, the issues of the documents which are DOD adopted are those listed in the issue of the DODISS cited in solicitation. Unless otherwise specified, the issues of documents not listed in the DODISS are the issues of the documents cited in the solicitation (see 6.2).

DRAWINGS

MCDONNELL DOUGLAS (CAGE Code 76301)

74J580155-103	Dry Bay Extinguisher

PRIMEX AEROSPACE COMPANY (CAGE Code 21562)

0750-2	Pyrotechnic Tape
32721-501	Ignition Pellet
32735-501	Propellant Pellets
33300-301	GGU-15A/A Gas Generator Assembly

SPECIAL DEVICES, INCORPORATED (CAGE Code 14720)

103377-351	Pressure Cartridge, Dual Bridgewire Assembly

PUBLICATIONS

SPECIAL DEVICES, INCORPORATED (CAGE Code 14720)

ATP-103377-351 (Revision A 21 November 1997)	Acceptance Test Procedure for Pressure Cartridge, Dual Bridgewire Assembly P/N 103377-351

AMERICAN SOCIETY FOR TESTING AND MATERIALS (ASTM)

ASTM B 117	Standard Practice for Operating Salt Spray (Fog) Apparatus
ASTM D 1141	Standard Specification for Substitute Ocean Water
ASTM E 1742	Standard Practice for Radiographic Examination

(Application for copies of ASTMs should be sent to the American Society for Testing and Materials, 100 Barr Harbor Drive, West Conshohocken, PA 19428-2959)

2.4 Order of precedence. In the event of a conflict between the text of this document and the references cited herein, the text of this document takes precedence. Nothing in this document, however, supersedes applicable laws and regulations unless a specific exemption has been obtained.

3. REQUIREMENTS

3.1 First article. When specified (see 6.2), a sample shall be subjected to the first article inspection in accordance with 4.2.1. A first article inspection shall be required when one or more of the following applies: (a) three years or more has passed since the gas generator or a similar item was manufactured; (b) there has been a major turn over in personnel; (c) there have been major changes to the production facility; or (d) there has been a transfer of production to a new facility or site.

3.2 Flight critical part. The gas generator is a flight critical item and the technical data package shall be identified and procured as such (see 6.4.2).

3.3 Design and construction. The following applies to the qualification status and configuration control of the gas generator over the entire life of the item.

3.3.1 Identical configuration. The gas generator's design and construction shall be identical to that subjected to qualification testing and approved for service use by the Navy. The gas generator operational environment shall be between −72 to 160°F. The qualified configuration is as listed below:

Model No.	NAVAIR P/N	Primex P/N	McDonnell Douglas P/N
GGU-15A/A	838AS243	33300-301	74J580155-103

3.3.2 Configuration control. Only the gas generator procured from the vendor listed on drawing 838AS243 is approved for the application specified. A substitute gas generator shall not be used or procured without prior testing and approval by the Indian Head Division , Naval Surface Warfare Center (IHDIV/NSWC), Indian Head, MD 20640-5035 and the Naval Air Systems Command Headquarters (AIR-4.3.5 and PMA-265).

3.4 Primary components. Ignition pellets (P/N 32721-501), propellant pellets (P/N 32735-501), and the electrical pressure cartridge (P/N 103377-351) are the gas generator primary components (see 6.4.1). Only one lot of each primary component shall be used in a gas generator lot. One primary lot may be used in more than one gas generator lot. Only primary components manufactured within the last 24 months shall be used in gas generator lots.

3.4.1 Electrical pressure cartridge. The zirconium potassium perchlorate ignition charge and the titanium hydride/potassium perchlorate main charge are the electrical pressure cartridge, P/N 103377-351, primary components. Only one lot of each primary component shall be used in an electrical pressure cartridge lot. One primary lot may be used in more than one electrical pressure cartridge lot.

3.4.1.1 P/N 103377-351 compliance. As a minimum, the P/N 103377-351 electrical pressure cartridge lot for each gas generator lot shall demonstrate compliance to the inspection and test requirements of accordance with ATP-103377-351, Revision A, dated 21 Nov 1997. Any changes to this document are subject to approval by the Indian Head Division, Naval Surface Warfare Center (IHDIV/NSWC), Indian Head, MD 20640-5035. In addition, the electrical pressure cartridges shall be capable of compliance with the requirements of MIL-I-23659.

3.5 Gas generator production. The gas generators shall be manufactured in accordance with drawing 838AS243. As a minimum, each production gas generator shall demonstrate compliance to the requirements of 3.4 and those outlined in Table I. Failure of any gas generator to meet the requirements of 3.4 and Table I shall result in rejection of that gas generator.

3.5.1 Visual inspection. The gas generators shall be free of the following defects: illegible, missing or inaccurate markings, burrs, dents, deep scratches, cracks, corrosion, sharp edges, bent or missing electrical contact pins, damaged mounting studs, chipped or incomplete protective finish, or other defects which may prevent the installation of the gas generator. The electrical pressure cartridge shall have a shorting plug installed which shorts all pins. Protective caps shall be installed on the mounting studs (see

6.4.3). Each gas generator shall meet the requirements of 3.4, 3.7 and those listed on drawing 838AS243.

TABLE I. Production inspections.

Test sequence	Test paragraph	Requirement paragraph
1. Visual inspection	4.3.1	3.4, 3.5.1, 3.7
2. Radiographic examination	4.3.2	3.5.2
3. Leakage	4.3.3	3.5.3
4. Bridgewire resistance	4.3.4	3.5.4

3.5.2 Radiographic examination. When radiographically examined in accordance with 4.3.2, the gas generators shall show proper assembly, presence of parts, sealing and presence of primary components. The radiographic inspection shall show no foreign materials present.

3.5.3 Leakage. Gas generators shall not exhibit a leak rate in excess of 2.7×10^{-5} cubic centimeters per second (cm^3/s) of helium (1.1×10^{-5} cm^3/s of air) at a pressure differential of 1.0 ± 0.1 atmospheres when tested in accordance with 4.3.3.

3.5.4 Bridgewire resistance. The bridgewire resistance between pins A - B and C - D shall be 0.90 to 1.10 ohms and the shunt bridgewire resistance between pins B - C shall be 0.70 to 1.30 ohms when tested in accordance with 4.3.4.

3.6 Gas generator performance. Gas generators shall meet all requirements of 3.6.1 through 3.6.3 and the acceptance criteria of 4.4.

3.6.1 Electrical characteristics.

3.6.1.1 Electrostatic discharge. Gas generators shall not fire, dud, or otherwise be affected when tested in accordance with 4.3.5.

3.6.1.2 Dielectric withstanding voltage. Gas generators shall not exhibit a leakage current in excess of 0.1 milliamperes when tested in accordance with 4.3.6.

3.6.1.3 Stray voltage. Gas generators shall not fire, dud, or otherwise be affected when tested in accordance with 4.3.7.

3.6.2 Environmental.

3.6.2.1 Six-foot drop. Gas generators shall not fire or incur any detrimental internal/external damage or degradation as a result of the six-foot drop test in accordance with 4.3.8 and shall meet the functioning requirements of 3.6.3 when tested.

3.6.2.2 Shock. Gas gas generators shall not initiate or incur any internal/external damage or degradation when shocks are applied in accordance with 4.3.9 and shall meet the functioning requirements of 3.6.3 when tested.

3.6.2.3 Vibration. Gas generators shall not initiate or incur any internal/external damage or degradation when vibration cycles are applied in accordance with 4.3.10 and shall meet the functioning requirements of 3.6.3 when tested.

3.6.2.4 Temperature/humidity/altitude (TH&A) cycling. Gas generators shall not initiate or incur any internal/external damage or degradation when subjected to TH&A cycling in accordance with 4.3.11 and shall meet the functioning requirements of 3.6.3 when tested.

3.6.2.5 Salt fog. The gas generator shall not initiate or incur any internal/external damage or degradation when subjected to salt fog testing in accordance with 4.3.12 and shall meet the functioning requirements of 3.6.3 when tested.

3.6.3 Functioning. The gas generator shall meet the requirements of 3.6.3.1 through 3.6.3.4 when fired in accordance with 4.3.13.

3.6.3.1 Maximum pressure. The upper and lower limits for maximum pressure (in pounds per square inch absolute, (psia)) when functioned over a temperature range from -72 to +160 °F shall be 50 psia and 20 psia, respectively.

3.6.3.2 Time to 95% of maximum pressure. The limit for time to 95% of maximum pressure shall not exceed 200 milliseconds (see 6.4.4).

3.6.3.3 Ignition delay. The ignition delay shall not exceed 25 milliseconds (see 6.4.5).

3.6.3.4 Delta (Δ) weight. The change in the weight of the gas generator, following functioning, shall not be less than 100 grams (see 6.4.6).

3.7 Workmanship. The gas generator shall be constructed and finished in a manner to assure compliance with all requirements of this specification.

4. VERIFICATION

4.1 Classification of inspections. The inspection requirements specified herein are classified as follows:

a. First article inspection (see 4.2.1)
b. Production inspection (see 4.2.2)
c. Lot acceptance inspection (see 4.2.3)

4.2 Types of inspections.

4.2.1 First article inspection. Unless otherwise specified (see 6.2), a first article inspection sample of 27 gas generators conforming to drawing 838AS243 shall be subjected to first article testing. Twenty-four of these gas generators shall be expended in the tests listed in Table II and the Government shall retain the remaining three for investigative purposes. Any damage inflicted by the environmental exposures which would adversely affect the performance of the item in service application shall be cause for rejection of the first article sample. Any production prior to notification by the contracting activity of

the first article sample acceptability shall be at the contractor's risk. Failure of any gas generator to comply with the requirements of section 3 shall be cause for rejection of the first article represented.

4.2.2 Production inspection. All production gas generators manufactured under the contract shall be inspected and screened for defects. Gas generators failing to meet the requirements listed in Table I shall be rejected and removed from the lot.

TABLE II. First article test plan.

Test sequence	Test Paragraph	Requirement Paragraph	Sample groups					
			I	II	III	IV	V	Total
1. Visual inspection	4.3.1	3.4, 3.5.1, 3.7	6	3	6	9	3	27
2. Radiographic examination	4.3.2	3.5.2	6	3	6	9	3	27
3. Leakage	4.3.3	3.5.3	6	3	6	9	3	27
4. Bridgewire resistance	4.3.4	3.5.4	6	3	6	9	3	27
5. Electrostatic discharge	4.3.5	3.6.1.1	6	3	6	9		24
6. Bridgewire resistance	4.3.4	3.5.4	6	3	6	9		24
7. Dielectric withstanding voltage	4.3.6	3.6.1.2	6	3	6	9		24
8. Bridgewire resistance	4.3.4	3.5.4	6	3	6	9		24
9. Stray voltage	4.3.7	3.6.1.3	6	3	6	9		24
10. Bridgewire resistance	4.3.4	3.5.4	6	3	6	9		24
11. 6-foot drop	4.3.8	3.6.2.1	6					6
12. Shock	4.3.9	3.6.2.2	6					6
13. Vibration	4.3.10	3.6.2.3	6	3				9
14. Temp./humidity/altitude	4.3.11	3.6.2.4		3				3
15. Salt fog	4.3.12	3.6.2.5			6			6
16. Radiographic examination	4.3.2	3.5.2	6	3				9
17. Leakage	4.3.3	3.5.3	6	3	6			15
18. Bridgewire resistance	4.3.4	3.5.4	6	3	6			15
19. Function test:	4.3.13	3.6.3						
- 72 ± 5°F			2		2	3		7
+ 70 ± 5°F			2	3	2	3		10
+160 ± 5°F			2		2	3		7

4.2.3 Lot acceptance inspection. Lot acceptance inspection shall consist of the examinations and tests specified in Table III. Failure of any sample gas generator to comply with the requirements listed in Table III shall be cause for rejection of the lot represented. Packaging defects shall be corrected before acceptance.

4.2.3.1 Sample size. A random sample of gas generators from each production lot, including the samples retained for investigative purposes, shall be selected in accordance with Table IV for lot acceptance inspection. Test sample gas generators and samples retained for investigative purposes shall not be applied as part of the quantity specified for delivery by the contract or purchase order (see 6.2).

4.3 Inspections and tests.

4.3.1 Visual inspections.

4.3.1.1 Gas generator inspection. The external condition and appearance of the gas generators shall be determined by comparison to drawing 838AS243. Specific inspections of the electrical connector, shunting plug, mounting studs, aluminum case, and identification label shall be conducted as a minimum. Each gas generator shall meet the requirements of 3.5.1 and 3.7.

TABLE III. Lot acceptance inspection and tests.

Inspection/test	Test paragraph	Requirement paragraph	Quantity
1. Visual inspection	4.3.1	3.4, 3.5.1, and 3.7	Test and retain sample
2. Radiographic examination	4.3.2	3.5.2	Test and retain sample
3. Leakage	4.3.3	3.5.3	Test and retain sample
4. Bridgewire resistance	4.3.4	3.5.4	Test and retain sample
5. Electrostatic discharge	4.3.5	3.6.1.1	Test and retain sample
6. Bridgewire resistance	4.3.4	3.5.4	Test and retain sample
7. Dielectric withstanding voltage	4.3.6	3.6.1.2	Test and retain sample
8. Bridgewire resistance	4.3.4	3.5.4	Test and retain sample
9. Function test:	4.3.13	3.6.3	
-72 ± 5°F			1/3 test sample
+70 ± 5°F			1/3 test sample
+160 ± 5°F			1/3 test sample

TABLE IV. Lot acceptance sampling.

Lot size	Test sample size	Retained sample size
1-50	12	1
51-200	15	1
201-500	21	2

4.3.1.2 Packaging inspection. The condition of the packaging, packing, and markings shall be determined by comparison to drawing 3205AS199. Gas generators shipped to the Navy shall meet the requirements specified in the contract (see 6.2).

4.3.2 Radiographic examination. Radiographic examination shall be conducted in accordance with ASTM E 1742. All gas generators shall be identified with serial numbers beginning with 001 prior to examination. The gas generators shall be arranged on boards or trays in consecutive order with any missing serial numbers identified on the radiographic plate. Each radiograph shall carry a permanent identification of the items displayed thereon in a 4 x 6 inch region maximum. The radiographic identification shall include the drawing number, the complete lot number in accordance with MIL-STD-1168, the contract number, and the span of serial numbers displayed. Radiographs of the entire production lot shall accompany the ballistic sample to the activity conducting the lot acceptance tests

(see 6.2). Any observable imperfections as outlined in 3.5.2 shall be cause for rejection of the gas generator. Defective gas generators found during radiographic review are to be marked on the radiographic plate and removed from the production lot. Radiographic equipment settings shall be noted on the radiographic review sheets.

4.3.3 Leakage test. The gas generators shall be subjected to the following leakage test:

a. For production inspections, conduct leakage test after clear-coat application but prior to pyrotechnic tape, P/N 0750-2, assembly. Also, for lot acceptance or first article inspections, remove pyrotechnic tape, P/N 0750-2, from each unit prior to test. Use care to avoid any surface deformation when removing pyrotechnic tape. *[Note: Helium can be trapped under pyrotechnic tape and provide false leak test readings or anomalies when test is conducted.]*

b. Remove any protective caps from the units and wipe exterior surfaces clean using a dry, lint free material.

c. Secure cap, P/N 838AS254, on gas generator electric initiator.

d. Verify leak detector is operational. Record leak detector make, model, range, serial number, accuracy, date of last calibration and calibration due date.

e. Place test units in a pressure vessel. *[Note: Leak testing on test units must occur within 15 + 1 minutes from the time the test unit is removed from the pressure vessel. Therefore, process only as many units as can be leak tested within 15 + 1 minutes of helium bombing. Any unit not tested within 15 + 1 minutes shall be re-pressurized.]*

f. Slowly evacuate the pressure vessel. Evacuate to a vacuum greater than 26 inches of mercury and close vacuum valve.

g. Seal and slowly pressurize the vessel with helium to 7.35 ± 1.00 psig. Hold at this pressure condition for 60 +1/-0 minutes.

h. Remove the test units from the pressure vessel and record the time on applicable data sheet.

i. Remove cap, P/N 838AS254, and remove any retained grease from units. Flush exterior of test units thoroughly with low-pressure air to remove possible trapped helium.

j. Perform helium leak test on the test unit using leak detector. Record time at which leak test is conducted on applicable data sheet. The leakage shall meet the requirements of 3.5.3.

4.3.4 Bridgewire resistance. Measure the initiator bridgewire resistance across pins A-B, C-D and B-C at 70 ± 18°F. The test current shall not exceed 50 milliamperes. The bridgewire resistance shall meet the requirements of 3.5.4.

4.3.5 Electrostatic discharge. The gas generators shall be subjected to the following electrostatic discharge test:

a. Temperature condition gas generators at 70 ± 5 °F for a minimum of 12 hours prior to conducting test.

b. Remove protective shorting plug from test unit just prior to test.

c. Discharge a 25,000 ± 500 volts direct current (Vdc) from a 500 ± 25 pico-farad capacitor through a 5,000 ± 250 ohm resistor connected in a 5 micro-henry total inductance series circuit between the shunted pins and case of gas generator electric pressure cartridge. Maintain the series connection for 60 seconds. The gas generator shall meet the requirements of 3.6.1.1.

4.3.6 Dielectric withstanding voltage. The test circuit shall be connected between the shorted electrical pins and the case of the gas generator electrical pressure cartridge. The gas generator electrical pressure cartridge shall be subjected to 500 ± 25 Vdc for 60 seconds. The current shall be measured with an accuracy of 5% and conducted in accordance with MIL-STD-202, Method 301. The gas generator shall meet the requirements of 3.6.1.2.

4.3.7 Stray voltage. The gas generators shall be subjected to the following stray voltage test:

a. Temperature condition gas generators at 70 ± 5 °F for a minimum of 12 hours prior to conducting test.

b. Verify test environment of 70 ± 5 °F.

c. Remove protective shorting plug from test unit just prior to test.

d. Subject gas generator to 2,000 pulses of direct current (dc) between bridgewire circuit A-B and C-D. Each pulse shall be 300 milliseconds duration and the pulse rate shall be 2 per second. Each pulse shall have an amplitude of 100 ± 5 milliamperes.

e. Failure of any gas generator to comply with the requirements of 3.6.1.3 shall be cause for rejection of the lot or first article or both.

4.3.8 Six-foot drop. The gas generators shall be subjected to the six-foot drop test as follows:

a. Remove any protective caps that may interfere with the drop test.

b. Out of the test group, select two units to impact the gas generator electric pressure cartridge down, two impacts electric pressure cartridge up and two impacts with gas generator horizontal. Refer to Figure 1 for impact orientations. *[Note: Each test unit shall only be dropped once.]*

c. Attach test unit to guide wire to ensure proper impact orientation.

d. Release lowest point of the test unit in the drop orientation from a vertical height of 6 feet + 2 inches –0 inches above the 2-inch thick steel target plate embedded in concrete. The gas generator shall meet the requirements of 3.6.2.1.

e. Failure of any gas generator to comply with the requirements of 3.6.2.1 shall be cause for rejection of the lot or first article or both.

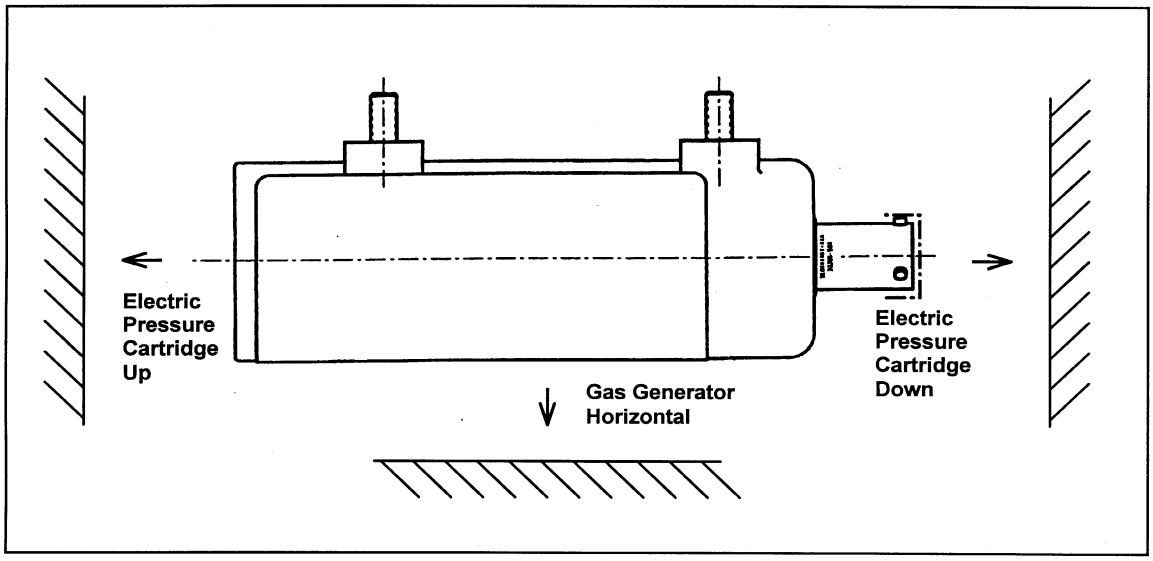

Figure 1. Six Foot Drop Orientations

4.3.9 Shock. The gas generators shall be subjected to the shock drop test as follows:

a. Assemble test items on fixture in accordance with drawing 3205AS216.

b. Secure shock plate and gas generator assembly onto test table. An input control shock sensor shall be rigidly attached to the test fixture as near as possible to the gas generator attachment points. A response shock sensor shall be attached on the gas generator housing at the least supported location.
c. Verify protective shorting plug installed and sealed with electrical tape.

d. The test items shall be subjected to 18 impact shocks using the levels and durations specified on Figure 2. Conduct shock testing at 70 ± 18 °F temperature conditions. Apply impact shocks, three in each direction per orthogonal axes depicted on Figure 3.

e. Failure of any gas generator to comply with the requirements of 3.6.2.2 shall be cause for rejection of the lot or first article or both.

4.3.10 Vibration. The gas generators shall be subjected to the vibration test as follows:

a. Remove protective caps from gas generator mounting studs.

b. Assemble test items on fixture in accordance with drawing 3205AS216.

c. Secure vibration plate and gas generator assembly onto test table. An input control vibration sensor shall be rigidly attached to the test fixture as near as possible to the gas generator attachment points. A response vibration sensor shall be attached on the gas generator housing at the least supported location or a location shown to have significant amplification.

d. Verify protective shorting cap installed and sealed with electrical tape.

e. A resonance survey, as indicated below, is required to be performed under the following conditions:

1) at the beginning of demonstration testing for each axis of vibration;

2) prior to restart of the test following modification or replacement of the vibration table, test fixture or test item;

3) if response data recorded during a particular vibration test indicates that the resonant frequencies have shifted in excess of ±10%.

Resonance survey: Perform a sine sweep from 5 Hz to 2,000 Hz at a frequency sweep rate of one octave/minute. The input level is .024 inch double amplitude or ± 2 g's, whichever is less. Resonant points shall be noted, the response recorded and plotted, with the modes of each resonance described.

Resonant modes: A resonant mode shall be considered to be any frequency-dependent mechanical disturbance which can be detected visually, aurally or by means of other sensing devices. A resonant mode exists at any frequency at which the ratio of specimen response level to input level is at a peak such that both an increase and a decrease in the excitation frequency will produce a decrease in the specimen levels. A gain of two between the output and input shall generally constitute a resonance.

f. Each test item shall be subjected to the Figure 4 vibration schedule at -72 °F, +70°F and +160°F. The vibration time per each axis shall be equally divided for vibration at -72 °F, +70°F and +160°F. The gas generator axis orientation is shown on Figure 3. The vibration fixture shall not have any structural resonance in the range of the vibration test frequencies.

g. Failure of any gas generator to comply with the requirements of 3.6.2.3 shall be cause for rejection of the lot or first article or both.

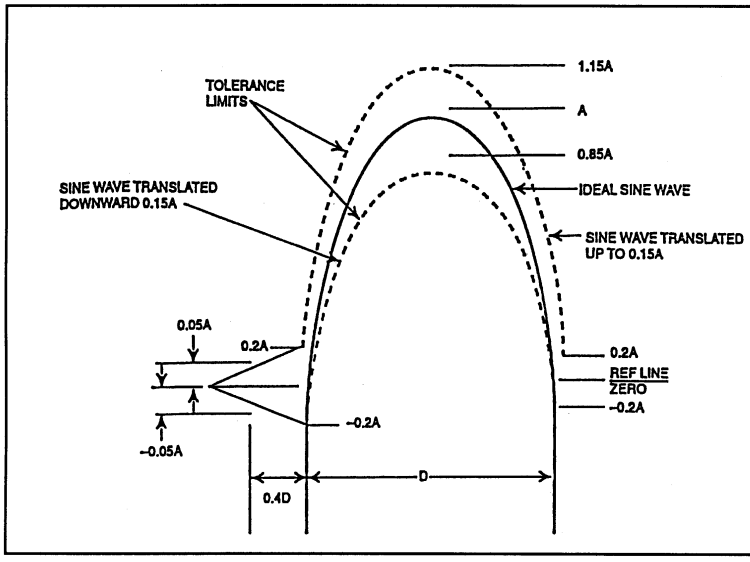

SERVICE SHOCK Basic Test	
Peak Value (G's)	Pulse Duration (ms)
15	11 ± 1

The oscillogram shall include a time about 3D long with a pulse located approximately in the center. The acceleration amplitude of the ideal half sine pulse is A and its duration is D. Any acceleration pulse, which can be contained between the broken line boundaries when measured with a 250Hz low pass filter, is acceptable.

Figure 2. Impact Shock Pulse

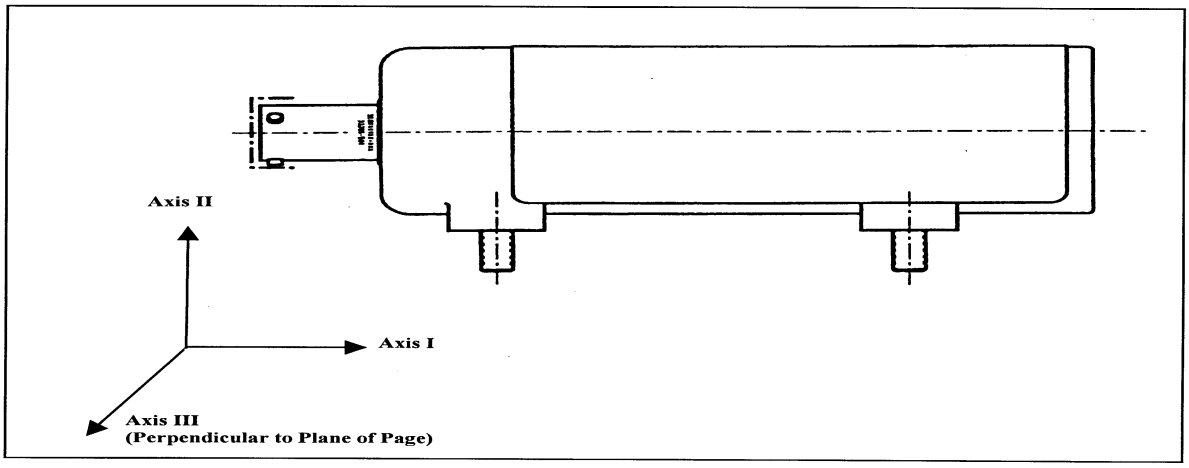

Figure 3. Shock and Vibration Axes

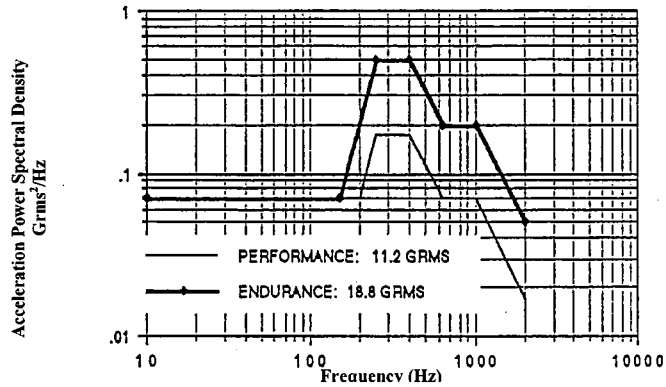

Frequency (Hz)	Performance Amplitude (G^2/Hz) or Slope	Endurance Amplitude (G^2/Hz) or Slope
10-151		0.07
10-200	0.07	
151-250		+12dB/Oct.
200-250	+ 12dB/Oct.	
250-400	0.17	0.5
400-633	- 6dB/Oct.	- 6dB/Oct.
633-1000	0.07	0.2
1000-2000	- 6dB/Oct.	- 6dB/Oct.

Random Test Schedule
(Test times in minutes per axis)

Random Performance	30
Random Endurance	120

Figure 4. Vibration Profile

4.3.11 Temperature/humidity/altitude (TH&A) cycling test. The gas generators shall be submitted to the TH&A cycling test, outlined in MIL-D-21625, with the following requirements:

a. Test to be conducted with protective cap sealed with tape and electrical bonding area covered with tape.

b. Place units on screen trays or in wire baskets to allow air to circulate freely, exposing all surfaces of the units, except noted otherwise.

c. The gas generators shall be subjected to a 28-day TH&A cycling test as indicated in Table V. There shall be no interim withdrawals.

d. Failure of any gas generator to comply with the requirements of 3.6.2.4 shall be cause for rejection of the lot or first article or both.

4.3.12 Salt fog. The gas generators shall be subjected to the salt fog test as follows:

a. Test to be conducted with protective shorting cap installed and sealed with electrical tape and electrical bonding area (flat contact surface at mounting studs) also covered with electrical tape.

TABLE V. Temperature/humidity/altitude cycling procedure.

DAY	TIME	PROCEDURE
MONDAY	0800	Place items in chamber maintained at 70°F and 50% Relative Humidity (RH)
	1200	Raise chamber to 160°F and 95%RH. Chamber shall reach conditions within one hour.
	1600	Remove items and immediately place in a chamber maintained at −72°F at a pressure altitude (PA) of 60,000 feet (ft)
TUESDAY	0800	Remove items from chamber and place in chamber maintained at 70°F and 50% RH.
	1200	Remove items from chamber and place in chamber maintained at −72°F and 60,000 ft PA.
	1600	Remove items from chamber and place in chamber maintained at 160°F and 95% RH.
WEDNESDAY	0800	Reduce chamber pressure to 70°F at 50% RH. Chamber shall reach conditions within one hour.
	1200	Raise chamber to 160°F and 95% RH. Chamber shall reach conditions in one hour.
	1600	Remove items and place in chamber maintained at −72°F and 60,000 ft PA.
THURSDAY		Repeat Tuesday schedule.
FRIDAY	0800	Reduce chamber pressure to 70°F at 50% RH. Chamber shall reach conditions within one hour.
	1200	Raise chamber to 160°F and 95% RH. Chamber shall reach conditions in one hour. *See Note (2)*
	1600	Remove items and place in chamber maintained at −72°F and ambient pressure.

TABLE NOTES:

(1) Tests shall be performed in the sequence shown, for durations and conditions shown. Day and clock times are provided as a guide and are not mandatory.

(2) Test schedule shall be repeated for a total of four weeks (28 days) except that on the second and fourth weekends the soak time shall be from 1200 Friday until 0800 on Monday at 160°F and 95% RH.

(3) No interim withdrawals of items. All items submitted for test shall complete the entire 28-day test cycle.

b. The test shall be conducted in accordance with the procedure of ASTM B 117 except that synthetic sea water conforming to ASTM D 1141 shall be used in place of the 5% salt solution. The control of pH and salt impurity requirements per ASTM B 117 shall not apply. Test duration shall be 168 hours. Waxed string shall be used to support the gas generators in the chamber. The cartridges shall be oriented horizontally with mounting studs down.

c. After completion of testing, the salt deposits (if any) shall be removed, if necessary, for aiding in a visual inspection. To remove the salt deposits, a gentle washing technique shall be used with water not warmer than 38ºC (100ºF). Then the gas generators shall be stored for 48 hours at 70ºF.

d. Failure of any gas generator to comply with the requirements of 3.6.2.5 shall be cause for rejection of the lot or first article or both.

4.3.13 Functional performance. The gas generators shall be subjected to the functional test as follows:

a. Remove all protective caps except electric shunt and weigh each test item to the nearest gram.

b. Units shall be temperature conditioned for not less than 4 hours and no more than 24 hours at the specified temperatures.

c. Verify that the temperature of test fixture tank is at a temperature of 70 ± 5 °F.

d. Test unit shall be functioned within 5 minutes maximum following removal from the conditioning box. If any test item is not fired within five minutes after removal, it shall be reconditioned at the specified temperature for an additional 4 hours and then tested.

e. Assemble test item on fixture in accordance with drawing 3205AS191.

f. Evacuate the air from the test fixture to less than 0.5 psia.

g. Fire the test item by applying a 50 millisecond pulse of 3.5 + 0.5 amp current across either bridgewire A-B or C-D. Approximately one-half (50%) of each group , submitted for functional test, shall be fired across bridge A-B and the other half across C-D.

h. Record the tank pressure versus time within the test fixture during test. The gas generators shall meet the requirements of 3.6.3.1 through 3.6.3.4.

4.3.13.1 Test failure. If a test failure is attributable to an assigned cause, excluding the gas generator, the test shall be declared a no-test and repeated.

4.4 Acceptance criteria. The gas generators shall meet the requirements of 3.6 when tested as specified in 4.3.3 through 4.3.13. The acceptable number of defects is 0 and the rejection number is 1.

5. PACKAGING

5.1 Packaging. For acquisition purposes, the packaging requirements shall be specified in the contract or order (see 6.2). When actual packaging of materiel is to be performed by DOD personnel, these personnel need to contact the responsible packaging activity to ascertain requisite packaging requirements. Packaging requirements are maintained by the Inventory Control Point's packaging activity within the Military Department or Defense Agency, or within the Military Department's System Command. Packaging data retrieval is available from the managing Military Department's or Defense

Agency's automated packaging files, CD-ROM products, or by contacting the responsible packaging activity.

6. NOTES

(This section contains information of a general or explanatory nature that may be helpful but is not mandatory.)

6.1 Intended use. The gas generator is designed for use in the F/A-18E/F Aircraft Dry Bay Fire Suppression System. The Dry Bay Fire Suppression System is designed to protect the dry bays under fuel tanks 2, 3 and 4. The gas generator is for military aircraft use and has no equivalent commercial application.

6.1.1 Operation. When the system is armed, all the gas generators are automatically discharged upon detection of a fire/explosion; no aircrew interaction is required. Six (6) 33300-301 gas generators are installed in various locations within the dry bays. The gas generators are connected to a Fire Suppression Control Alarm (FSCA), which is connected to Optical Fire Detectors (OFDs). Upon sensing a fire, the optical fire detectors transmit a signal to the FSCA. The FSCA is programmed to send electrical firing pulses in a pre-determined timing sequence to all gas generators. The gas generators, when initiated, the main propellant combustion produces inert gases comprised mainly of nitrogen, carbon dioxide and water vapor. The gases vent radially through orifices in the body of the gas generators. These inert gases achieve fire extinguishment in the dry bays by reducing the oxygen level below that required for sustaining combustion. The gas is non-ozone depleting, non-toxic and has a minimal corrosive effect on the aircraft dry bay structure. Once gas generators are fired, the system can only be restored to operational use by replacement of functioned units.

6.1.2 Changes to configuration. These gas generators were developed to function in the F/A-18E/F dry bays. Of major importance is the structural over pressure limits of the bays. Changes to the gas generators resulting in increased performance, faster burn times or greater pressure output could result in the structural failure of the airframe components during an inadvertent actuation of the system.

6.2 Acquisition requirements. Acquisition documents must specify the following:

a. Title, number, and date of this specification.

b. Issue of DODISS to be cited in the solicitation, and if required, the specific issue of individual documents referenced (see 2.2.1, 2.2.2 and 2.3).

c. Whether a first article inspection is required and, if so, specify the test activity (see 3.1 and 4.2.1).

d. Directions for shipping radiographs of entire production lot and marriage log (report indicating cartridge serial number to initiator serial number), along with the ballistic sample to the activity conducting the production lot acceptance tests (see 4.3.2).

e. Markings if other than as specified in 5.1.

f. If bar coding is not required on outer container (see 6.5.2).

g. Inspection conditions if other than as specified.

h. Production lot size (quantity) and test facility (see 4.2.3.1).

i. Configuration of DCA required (see 2.2.2).

j. Packaging requirements (see 4.3.1.2, 5.1, and 6.5).

k. That the safety precaution requirements of the "DoD Contractors' Safety Manual for Ammunition and Explosives," DOD 4145.26-M are applicable. NOTE: When this specification is used as a part of the description of work to be accomplished by a Government activity, the safety precautions requirements of "Ammunition and Explosives Ashore," OP 5, are applicable.

6.3 First article. When a first article inspection is required, the contracting officer should provide specific guidance to offeror(s) whether the item(s) should be a preproduction sample, a first article sample, a first production item, a sample selected from the first production items, standard production item from the contractor's current inventory (see 3.1) and the number of items to be tested as specified in 4.2.1. The contracting officer should also include specific instructions in acquisition documents regarding arrangements for examinations, approval of first article test results, and disposition of the first articles. Invitation(s) for bid(s) should provide that the Government reserves the right to waive the requirement for samples for first article inspection to those bidders offering a product which has been previously acquired or tested by the Government, and that bidders offering such products, who wish to rely on such production or test, must furnish evidence with the bid that prior Government approval is presently appropriate for the pending contract. Bidders should not submit alternate bids unless specifically requested to do so in the solicitation.

6.4 Definitions.

6.4.1 Primary component. Primary components are all components in which a functional failure would result in a misfire or malfunction of the gas generator.

6.4.2 Flight critical part. A part, the single failure of which, during any operating condition, could cause the loss of aircraft or one of its major components, loss of control, or which may cause significant personnel injury, including during flight.

6.4.3 Caps and plugs. Plastic shipping caps are installed on the end of the mounting studs and a shorting plug is installed on the electrical pressure cartridge.

6.4.4 Time to 95% of maximum pressure. Time from indication of pressure within the test fixture to when 95% of the maximum pressure is observed.

6.4.5 Ignition delay. Time from firing current application to first indication of pressure in test fixture.

6.4.6 Delta (Δ) weight. Weight of gas generator, without protective plugs and caps installed, minus the immediate post functioning weight of gas generator.

6.5 Contract packaging and markings. Gas generators for shipment to the Navy should be packaged and marked in accordance with drawing 3205AS199. In addition, six (6) gas generators packaged and marked per drawing 3205AS199 should be packaged into a fiberboard box conforming to ASTM D 5118, Type CF or SF, class weather-resistant and WWVR, Style RSC, unless otherwise specified. Fiberboard containers should have no single dimension, e.g., length, width, height, exceeding 45 inches. A tight pack should be mandatory. *[Note: The hazard classification and National Stock Number (NSN) for the gas generator, has been established based on performed testing in container per drawing 3205AS199. Any changes in approved container may require hazard classification testing and assignment of a new NSN.]*

6.5.1 Normal marking. Unless otherwise specified in the contract or order (see 6.2), the marking on the outer fiberboard box and palletized unit loads should be as specified below. The specified markings shall be applied to the containers in accordance with the applicable provisions of MIL-STD-129-1.

Marking

(a) NSN: 1377-01-448-9910
(b) DODIC: SS49
(c) Generator, Gas, Dry Bay Fire Extinguisher GGU-15A/A
(d) Drawing 838AS243
(e) Quantity
(f) Gross weight and cube
(g) Lot number in accordance with MIL-STD-1168
(h) Contract or purchase order number

6.5.2 Bar coding. Unless otherwise specified in the contract or order (see 6.2), the outer box and palletized load should be bar coded in accordance with MIL-STD-129-1, Part 2.

6.6 Explanation of terms. For the purpose of this specification, NAVSUPINST 4030.28 should be used to clarify terms.

6.7 Subject term (key word) listing.

Propellant
Initiator
Fire suppression system

Preparing activity:
Navy - OS
(Project 1377-0080)

STANDARDIZATION DOCUMENT IMPROVEMENT PROPOSAL

INSTRUCTIONS

1. The preparing activity must complete blocks 1, 2, 3, and 8. In block 1, both the document number and revision letter should be given.

2. The submitter of this form must complete blocks 4, 5, 6, and 7.

3. The preparing activity must provide a reply within 30 days from receipt of the form.

NOTE: This form may not be used to request copies of documents, nor to request waivers, or clarification of requirements on current contracts. Comments submitted on this form do not constitute or imply authorization to waive any portion of the referenced document(s) or to amend contractual requirements.

I RECOMMEND A CHANGE:	1. DOCUMENT NUMBER MIL-DTL-32027 (OS)	2. DOCUMENT DATE (YYMMDD) 981022

GENERATOR, GAS, DRY BAY FIRE EXTINGUISHER, GGU-15A/A

4. NATURE OF CHANGE *(Identify paragraph number and include proposed rewrite, if possible. Attach extra sheets as needed.)*

5. REASON FOR RECOMMENDATION

6. SUBMITTER

a. NAME *(Last, First, Middle Initial)*	b. ORGANIZATION	
c. ADDRESS *(Include Zip Code)*	d. TELEPHONE (Include Area Code) (1) Commercial (2) AUTOVON *(if applicable)*	**7. DATE SUBMITTED** (YYMMDD)

8. PREPARING ACTIVITY

a. NAME	b. TELEPHONE *Include Area Code)*
COMMANDER, INDIAN HEAD DIVIISION 840M	(1) Commercial (301) 744-4700 (2) AUTOVON 354-4700
NAVAL SURFACE WARFARE CENTER 101 STRAUSS AVENUE INDIAN HEAD, MD 20640-5035	Defense Quality and Standardization Office 5203 Leesburg Pike, Suite 1403 Falls Church, VA 22041-3466 (703) 756-2340 DSN: 289-2340