INCH-POUND
MIL-DTL-29210E
7 April 2009
SUPERSEDING
MIL-DTL-29210D
9 May 2003

DETAIL SPECIFICATION

HOSE ASSEMBLY, RUBBER, METAL LINED, WIRE REINFORCED, 250 PSIG, SATURATED STEAM SERVICE

This specification is approved for use by all Departments and Agencies of the Department of Defense.

1. SCOPE

1.1 Scope. This specification covers metal lined, wire reinforced, rubber-hose assemblies for conveyance of saturated steam. The working pressure of this hose is 250 pound-force per square inch gauge (psig) (1.72 MPa gauge) at a temperature of 406°F (208°C).

1.2 Part or Identifying Number (PIN). The PIN consists of the letter M, the basic specification number, a dash, length in feet, hose size, hose end fitting code, hose reinforcement wire type, and seating material, as shown in the following example:

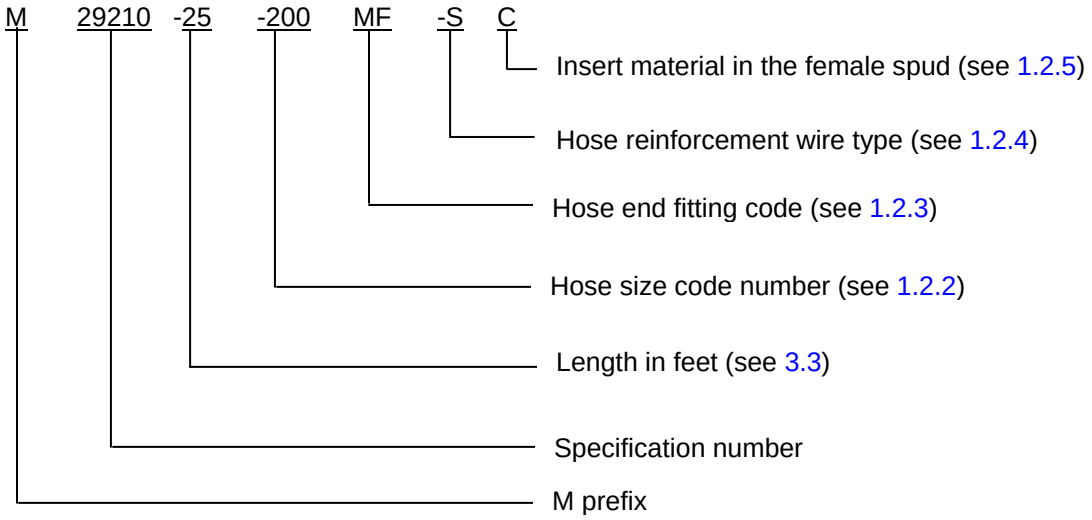

M29210-25-200MF-S describes a hose assembly 25 feet long, 1.5 inch inside diameter, with male and female ends, stainless steel reinforcement wires and copper seating material.

Comments, suggestions, or questions on this document should be addressed to: Defense Supply Center, Columbus, Attn: DSCC-VAI, P.O. Box 3990, Columbus, OH 43218-3990, or emailed to FluidFlow@dla.mil. Since contact information can change, you may want to verify the currency of this address information using the ASSIST Online database at http://assist.daps.dla.mil.

AMSC N/A FSC 4720

1.2.2 Hose size. Hose size is designated by a three-digit code number (see table I).

TABLE I. Hose size code number.

Hose size code number	Hose size, inside dimensions inches (mm)
075	.750 (19.05)
100	1.000 (25.40)
125	1.250 (31.75)
150	1.500 (38.10)
200	2.000 (50.80)

1.2.3 Hose end fittings. Hose end fittings are designated by two code letters (see table II).

TABLE II. Hose end fittings.

End fitting code letters	End fitting arrangement
MF	Male one end female other end
FF	Female both ends
MM	Male both ends

1.2.4 Hose reinforcement. Hose reinforcement wire is designated by a single letter, see table III.

TABLE III. Reinforcement wire.

Code	Material
B	Brass
S	Corrosion resistant wire
Z	Zinc-plated high tensile carbon steel wire

1.2.5 Insert material in the female spud. Insert material is designated by a single letter, C- copper insert or P - polymer insert.

2. APPLICABLE DOCUMENTS

2.1 General. The documents listed in this section are specified in sections 3, 4, or 5 of this specification. This section does not include documents cited in other sections of this specification or recommended for additional information or as examples. While every effort has been made to ensure the completeness of this list, document users are cautioned that they must meet all specified requirements documents cited in sections 3, 4, or 5 of this specification, whether or not they are listed.

2.2 Government documents.

2.2.1 Specifications, standards, and handbooks. The following specifications, standards, and handbooks form a part of this document to the extent specified herein. Unless otherwise specified, the issues of these documents are those cited in the solicitation or contract.

FEDERAL STANDARDS

FED-STD-H28	-	Screw-Thread Standards for Federal Services
FED-STD-162	-	Hose, Rubber, Visual Inspection Guide For

(Copies of these documents are available online at http://assist.daps.dla.mil/quicksearch/ or from the Standardization Document Order Desk, 700 Robbins Avenue, Building 4D, Philadelphia, PA 19111-5094.)

2.3 Non-Government publications. The following documents form a part of this document to the extent specified herein. Unless otherwise specified, the issues of these documents are those cited in the solicitation or contract.

ASTM INTERNATIONAL

ASTM A47/A47M	-	Standard Specification for Ferritic Malleable Iron Castings
ASTM A48/A48M	-	Standard Specification for Gray Iron Castings
ASTM A536	-	Standard Specification for Ductile Iron Castings
ASTM D380	-	Standard Test Methods for Rubber Hose
ASTM A751	-	Standard Test Methods, Practices, and Terminology for Chemical Analysis of Steel Products
ASTM D1149	-	Rubber Deterioration - Surface Ozone Cracking in a Chamber

(Copies of these documents are available online at http://www.astm.org or from the ASTM International, P.O. Box C700, 100 Barr Harbor Drive, West Conshohocken, PA 19428-2959.)

SAE INTERNATIONAL

SAE-AS1933	-	Age Controls for Hose Containing Age-Sensitive Elastomeric Material

(Copies of these documents are available from http://www.sae.org/ or from SAE International, 400 Commonwealth Drive, Warrendale, PA 15096-0001.)

2.4 Order of precedence. Unless otherwise noted herein or in the contract, in the event of a conflict between this document and the references cited herein the text of this document takes precedence. Nothing in this document, however, supersedes applicable laws and regulations unless a specific exemption has been obtained.

3. REQUIREMENTS

3.1 First article. When specified (see 6.2), a sample shall be subjected to first article inspection in accordance with 4.2.

3.2 Materials. Materials used shall be free from defects which would adversely affect the performance or maintainability of individual components or of the overall assembly. Materials not specified herein shall be of the same quality used for the intended purpose in commercial practice.

3.2.1 Recycled, recovered materials. Unless otherwise specified herein, all equipment, material, and articles incorporated in the work covered by this specification are to be new and fabricated using materials produced from recovered materials to the maximum extent possible without jeopardizing the intended use. The term "recovered materials" means materials which have been collected or recovered from solid waste and reprocessed to become a source of raw materials, as opposed to virgin raw materials. Unless otherwise specified, none of the above shall be interpreted to mean that the use of used or rebuilt products is allowed under this specification.

3.2.2 Wire reinforcement. Reinforcement wire shall be stainless steel, brass- or zinc-plated high tensile carbon steel wire, as specified (see 1.2.4 and 6.2).

3.2.3 Coupling components. All coupling components, except washers and contact surface inserts, shall be cold-rolled steel bar stock or malleable iron in accordance with ASTM A47/A47M, grade 32510, or ductile iron in accordance with ASTM A536, grade 60-40-18 or grade 65-45-12, and shall be protected with a corrosion-resisting coating. Gray iron castings in accordance with ASTM A48/A48M shall not be acceptable.

3.3 Length. The hose shall be furnished in nominal 25 or 50-foot (7620 or 15240 mm) lengths, exclusive of the couplings, as specified (see 6.2). A tolerance of ±1 percent shall be permitted when tested as specified in 4.7.1.1.

3.4 Construction. The hose assembly shall be constructed as specified in tables I, II, III, IV, and V, and 3.4.1 through 3.4.3.

TABLE IV. Physical requirements for hoses without liner.

Size, inside diameter inches (mm)	.75 (19.05)	1.0 (25.40)	1.25 (31.75)	1.5 (38.10)	2.0 (50.80)
Tolerance, inside diameter, plus or minus inches (mm)	+.039 (0.99) -.016 (0.41)	+0.047 (+1) -0.016 (-0.41)	+0.063 (+2) -0.016 (-0.41)	+0.063 (+2) -0.016 (-0.41)	+0.063 (+2) -0.016 (-0.41)
Outside diameter, minimum Inches (mm)	1.28 (32.51)	1.56 (39.62)	1.84 (46.74)	2.06 (52.32)	2.63 (66.80)
Weight per foot, maximum pound (kilogram/meter (kg/m)	.80 (20.32)	1.0 (25.40)	1.32 (33.53)	1.80 (45.72)	2.10 (53.34)

TABLE V. Physical requirements for metal liner.

Hose size, inside diameter inches (mm)	Metal liner, inside diameter minimum inches (mm)	Metal liner, thickness, minimum inches (mm)
.75 (19.05)	.56 (14.22)	.010 (0.25)
1.00 (25.40)	.81 (20.57)	.010 (0.25)
1.25 (31.75)	1.00 (25.40)	.010 (0.25)
1.50 (38.10)	1.25 (31.75)	.013 (0.33)
2.00 (50.80)	1.75 (44.45)	.015 (0.38)

3.4.1 Hose body (see figure 1). The hose shall consist of the following:

a. A heat-resistant inner tube, properly compounded to resist saturated steam that shall not blister, pit, flake, peel, or popcorn when tested as specified in 4.7.2.4.
b. The hose shall be reinforced by two or more stainless steel, brass, or zinc-plated high tensile carbon steel wire braids or spirals with a layer of rubber between each braid or spiral.
c. A heat-resistant, abrasion-resistant, and ozone-resistant rubber cover. The cover on the hoses shall be perforated after cure with not less than 260 holes per 36-inches (914 mm) hose length, e.g. in four rows radially spaced at 90 degrees around the periphery.

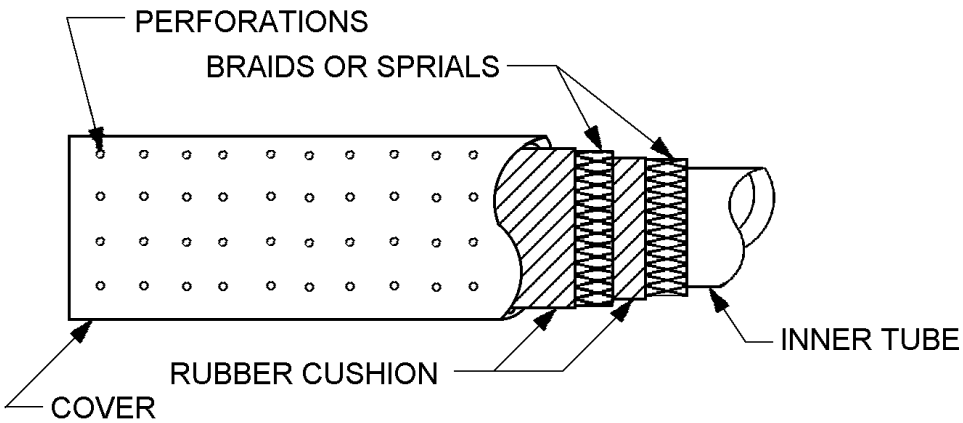

FIGURE 1. Hose configuration.

3.4.2 Metal liner. The metal liner shall be corrosion resistant steel type 302, 304, 316, or 321. The corrosion resistant steel inner liner shall be unpacked, fully interlocked, four-wall, flexible tubing, see figure 2. There shall be no sharp edges or burrs on the ends of the metal liner to cause damage to the tube during assembly or in service. The liner shall be allowed to float free within the hose. The physical requirements for the liner shall be as specified in table V, see 6.4. The liner shall extend along the entire length of the assembly.

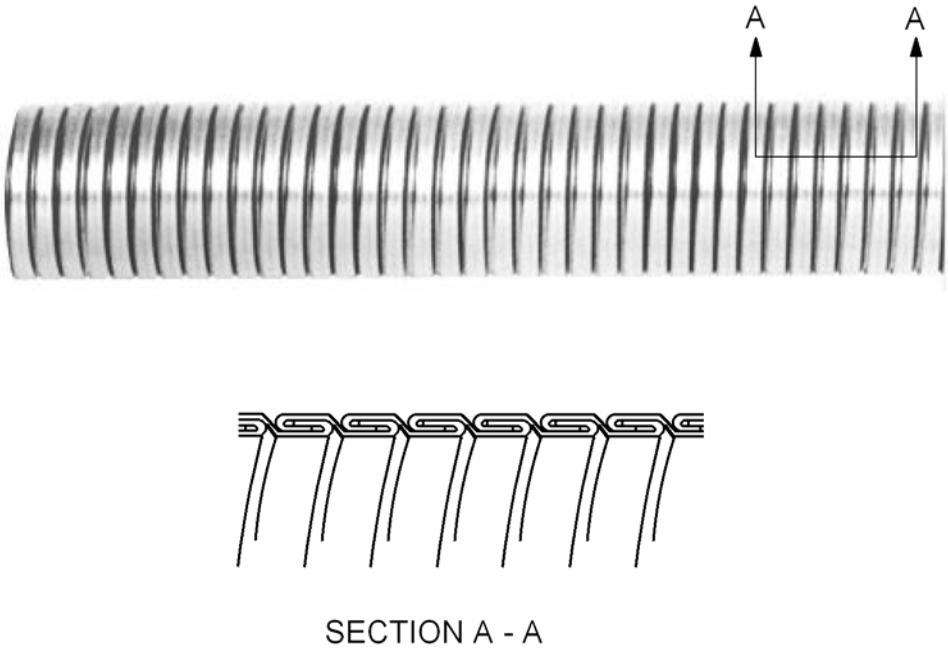

FIGURE 2. Interlocked flexible metal tubing.

3.4.3 Hose fittings. Hose fittings shall be of the long shank, interlocking clamp type, having fingers or lugs on each half of the clamp to grip the collar on the stem, see figures 3 and 4. The fittings shall prevent the stem shank from being pulled forward in relation to the clamp. Each clamp half shall interlock with the other half.

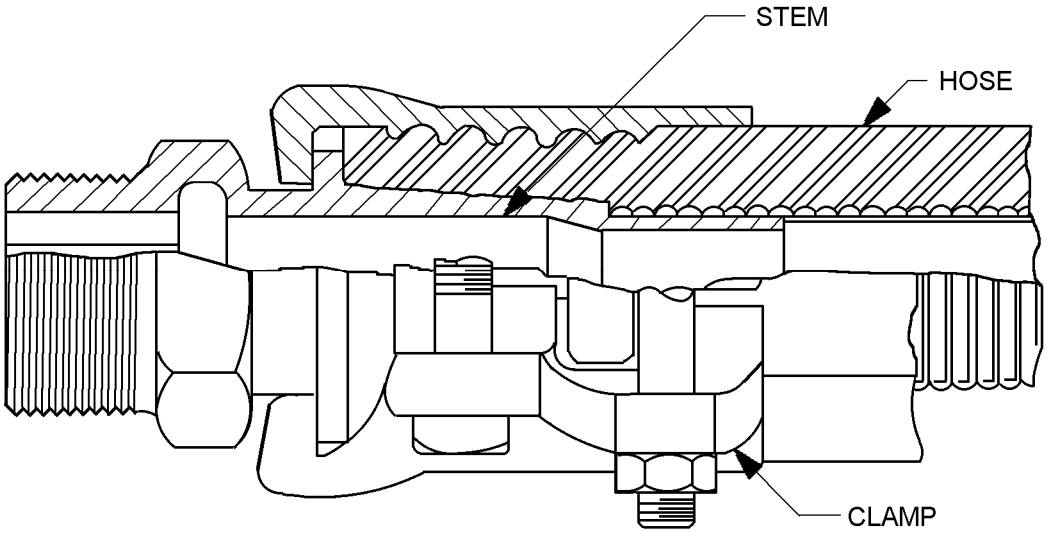

FIGURE 3. Male end fitting assembly.

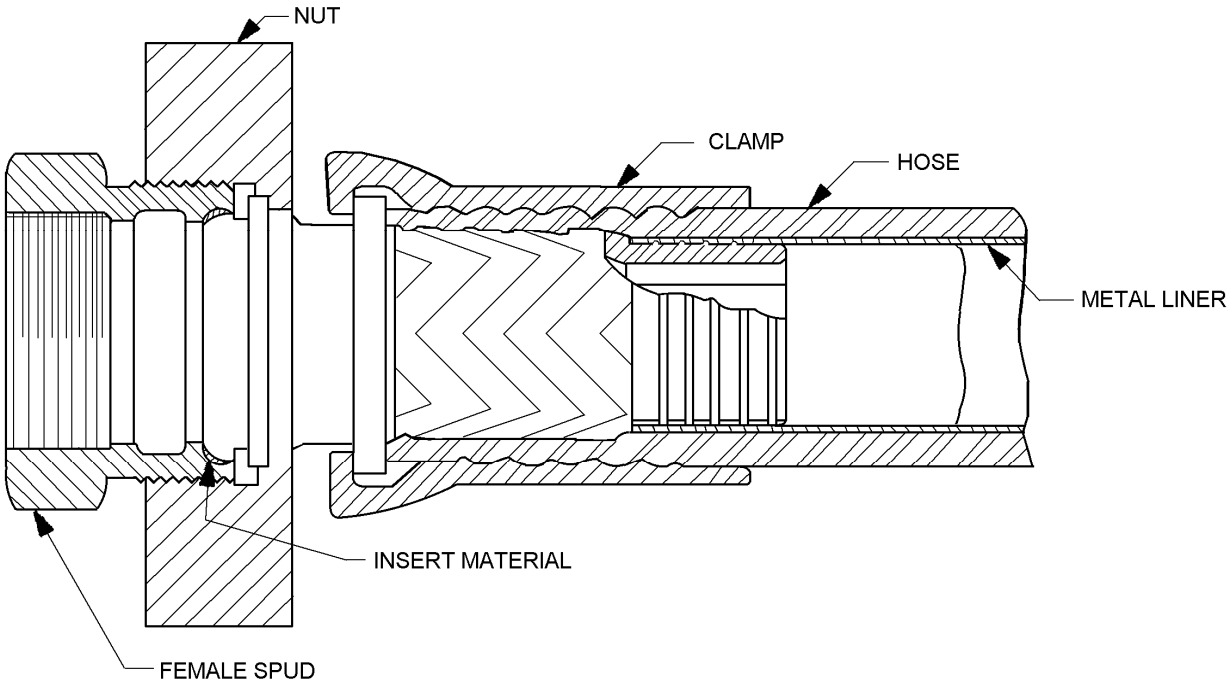

FIGURE 4. Female end fitting assembly.

3.4.3.1 Coupling components. Coupling components shall consist of a serrated stem with a raised continuous collar, a swivel nut and spud (for female section). Coupling components shall also consist of a two-part interlocking type clamp with two bolts for the .75-inch (19.05 mm) size hose and four bolts for the larger size hoses.

3.4.3.2 Seating surface. The seating surface of the female stem shall be round to fit the beveled copper insert or polymer insert in the female spud, as specified (see 6.2). There shall be no sharp edges on the nipples or the clamps to cause damage to the tube or cover. When assembled, there shall be provisions for additional take-up of clamps in service.

3.4.3.3 Special stem design. The male and female stems shall be designed with rib type right hand spirals at the end of the stem to screw into the stainless steel liners providing positive gripping and retention. The pitch of the rib type spirals shall be.312-inch (7.92 mm) for the 1.5-inch (38.10 mm) and 2-inch (50.80 mm) hose fittings and .25-inch (6.35 mm) for the .75-inch (19.05 mm), 1-inch (25.40 mm), and 1.25-inch (31.75 mm) hose fittings. The spiral on the male and female stems shall be of sufficient length to ensure that part of the metal liner is always under the clamp which provides additional gripping and retention when the clamps are torqued over the hose (see 6.5).

3.4.3.4 Threads. Female threads on spud and male connections shall be American Standard Taper Pipe (NPT) meeting the requirements of FED-STD-H28. The female threads on the swivel shall be American Standard Straight Pipe (NPSM).

3.5 Strength.

3.5.1 Proof pressure. The hose assembly, complete with metal liner and couplings, shall withstand a proof pressure of 1250 psig (8.6 MPa (gauge)) without leakage or other indication of weakness when tested in accordance with 4.7.1.2.

3.5.2 Burst resistance. The hose, without liner, shall not burst at a pressure less than 2500 psig (17 MPa (gauge)) when tested in accordance with 4.7.2.5.

3.6 Ozone resistance. The rubber cover shall show no visible cracking under 7X magnification after testing in accordance with 4.7.2.3.

3.7 Steam resistance. When tested as specified in 4.7.2.4, there shall be no delamination of body components, cracks through the cover exposing reinforcement, or weakness of the fittings. The hose shall reveal no flaws, such as blistering, cracking, flaking, or popcorning of the tube or cover when tested as specified in 4.7.2.4.

3.8 Identification marking. Each length of hose shall be marked in a color that contrasts with the color of the hose cover. Marking shall be non-removable except by mechanical means. The marking shall consist of the manufacturer's name or trademark, the quarter and year of manufacture, MIL-DTL-29210, "250 psig (1724 kpa (gauge)), and the word "STEAM". Letters shall be not less than 0.25-inch (6 mm) high.

3.8.1 Marking tag. A marking tag shall be wired near each end fitting (two tags per length of hose), advising users of all safety precautions to be followed in the use of the hose. The following shall be included on the tag:

a. Hose clamps shall be checked for proper application and shall be re-tightened, as necessary, prior to being placed into service. Be sure that clamps are interlocked over the collar on the nipple and that each clamp half interlocks with the other.
b. Hose clamps shall be tightened after the first several hours of steaming of the hose and periodically thereafter.
c. The importance of taking up evenly on all bolts to prevent cocking of the hose clamps shall be emphasized.
d. Torque requirements for clamp hardware.
e. Other operational and maintenance suggestions considered necessary by the hose and end fitting manufacturers.

3.9 Age. Hose assemblies shall meet the age limitation requirements specified in SAE-AS1933.

3.10 Workmanship. Workmanship inspection shall consist of verification that the materials, finishes, and construction, specified in table VI, are used in fabricating and manufacturing of the hose and hose assemblies described in this specification.

TABLE VI. Workmanship.

Component	Inspection	Inspection method	Requirement paragraph
Coupling components, except washers and contact surface inserts	Cold-rolled steel bar stock or malleable iron in accordance with ASTM A47/A47M, grade 32510, or ductile iron in accordance with ASTM A536, grade 60-40-18 or grade 65-45-12.	Certificate or test 1/	3.2.3
Coupling components	Protected with a corrosion-resisting coating.	Certificate or test 1/	3.2.3
Hose cover	Perforated and 260 holes per 36 inches (914 mm).	Visual	3.4.1 (c)
Hose cover	Cut or gouge in the cover that exposes the reinforcement wires	Visual	N/A
Hose	Kinking or broken reinforcement wires	Visual	N/A
Hose	Flattened hose	Visual	N/A
Reinforcement wire	Braids or spirals	Visual	3.4.2
Reinforcement wire material	Corrosion resistant steel, brass, or zinc-plated high tensile carbon steel wire	Certificate or test 1/	3.2.2
Metal liner material	Corrosion resistant steel type 302, 304, 316, or 321.	Certificate or test 1/	3.4.2
Hose fittings	Long shank, interlocking clamp type, having fingers or lugs on each half of the clamp to grip the collar on the stem	Visual	3.4.3
Coupling components	Coupling components consist of a serrated stem with a raised continuous collar.	Visual	3.4.3.1
Coupling components (for female section)	Swivel nut and spud	Visual	3.4.3.1
Coupling components	Two-part or four-part interlocking type clamp with two or four bolts.	Visual	3.4.3.1
Seating surface	Seating surface of the female stem shall be round to fit the beveled copper insert or polymer insert in the female spud.	Visual	3.4.3.2
Special stem design	The male and female stems have rib type right hand spirals at the end of the stem.	Visual	3.4.3.3
Female threads on spud and male connections	NPT threads	Thread gauge or go -no go gauge	3.4.3.4
Female threads on the swivel	NPSM threads	Thread gauge or go -no go gauge	3.4.3.4
Marking	Present and correct	Visual	3.8
Marking tag	Present and correct	Visual	3.8.1
Age	Within age limitation requirements specified in SAE-AS1933	Visual	3.9

1/ Certification or testing as required by the contract or purchase order (see 6.2.(e)).

4. VERIFICATION

4.1 Classification of inspection. The inspection requirements specified herein are classified as follows:

a. First article inspection (see 4.4).
b. Conformance inspection (see 4.5).

4.2 Inspection conditions. Unless otherwise specified, all inspections shall be performed in accordance with the test conditions specified in accordance with the applicable test method referenced in the test procedures.

4.2.1 Test equipment and inspection facilities. Test and measuring equipment and inspection facilities of sufficient accuracy, quality and quantity to permit performance of the required inspection shall be used.

4.3 Responsibility for compliance. All items shall meet all requirements of sections 3, 4, and 5. The inspection set forth in this specification shall become a part of the contractor's overall inspection system or quality program. The absence of any inspection requirements in the specification shall not relieve the contractor of the responsibility of ensuring that all products or supplies submitted to the Government for acceptance comply with all requirements of the contract. Sampling inspection, as part of manufacturing operations, is an acceptable practice to ascertain conformance to requirements, however, this does not authorize submission of known defective material, either indicated or actual, nor does it commit the Government to accept defective material.

4.3.1 Lot records. Manufacturers shall keep lot records for 3 years minimum. Manufacturers shall monitor for compliance to the prescribed procedures, and observe that satisfactory manufacturing conditions and records on lots are maintained for these hose assemblies. The records, including as a minimum, an attributes summary of all quality conformance inspections conducted on each lot, shall be available to review by customers at all times.

4.4 First article inspection. First article inspection shall be performed at a laboratory acceptable to the procuring activity on sample units produced with equipment and procedures used in production.

4.4.1 First article inspection routine. All samples shall be subjected to first article testing specified in table VII.

4.4.2 Sampling. The unit of product shall be one hose assembly. All hose assemblies offered for delivery at one time shall be considered a lot for the purpose of inspection.

4.4.2.1 Samples for first article. The first article may be either a first production item or a standard production item from the supplier's current inventory provided the item meets the requirements of the specification and is representative of the design, construction, and manufacturing technique applicable to the remaining items to be furnished under the contract.

4.4.2.2 Sampling for hose without metal liner tests. Unless otherwise specified (see 6.2), an additional 8-foot (2438 mm) length hose, without liner, shall be provided for the tests on the hose without metal liner, see table VII. This additional length of hose shall be manufactured of the same materials and under the same conditions as the hoses in the lot.

TABLE VII. First article inspection.

Inspection	Requirement	Test method
All hose assemblies		
Examination	3.4, 3.9, and 3.10	4.6
Length measurement	3.3	4.7.1.1
Proof pressure	3.5.1	4.7.1.2
Hose testing		
Hose size	3.4	4.7.2.1
Unit weight	3.4	4.7.2.2
Ozone resistance	3.6	4.7.2.3
Steam resistance	3.7	4.7.2.4
Burst resistance	3.5.2	4.7.2.5
Metal liner tests		
Inside diameter	3.4	4.7.3.1
Thickness	3.4	4.7.3.2
Chemical composition 1/	3.4.2	4.7.3.3

1/ Certification or testing as required by the contract or purchase order (see 6.2 (e)).

4.4.2.3 Sampling for metal liner tests. A 6-foot (1829 mm) length of metal liner shall be provided for the tests on the metal liner, see table VII. This length of metal liner shall be taken from the same lot of liner used in the manufacture of the hose.

4.4.3 Failures. All samples must meet all of the contract requirements. Failure of a sample unit to pass any test shall be cause for rejection of the entire lot and to grant first article approval.

4.4.4 First article samples. Unless otherwise specified, after award of the contract or order, the manufacturer shall forward 1 hose assembly. The sample shall be representative of the construction, workmanship, components, and materials to be used during production. When a manufacturer is in continuous production of the hose assemblies from one contract to another, submission of additional first article samples for a new contract may be waived at the discretion of the acquiring activity (see 6.2).

4.4.5 Disposition of samples. First article samples shall be furnished to the Government as directed by the contracting officer (see 6.2).

4.5 Conformance inspection. For manufacturers that have successfully passed first article inspections and are continuously producing hose assemblies to this specification on going inspections shall consist of individual inspections, see table VIII. If first article is waived due to prior successful first article inspection the individual inspections shall be the manufactures in house inspection procedures.

4.5.1 Individual inspection samples. All hose assemblies shall be subjected to the individual inspections in table VIII.

TABLE VIII. Individual inspections (group A).

Inspection	Requirement	Test method
Examination	3.4, 3.9, and 3.10	4.6
Length measurement	3.3	4.7.1.1
Proof pressure	3.5.1	4.7.1.2

4.6 Examination. Each hose and hose assembly selected shall be visually and dimensionally examined to determine conformance to the requirements of this specification not involving tests. The workmanship of the hose and hose assembly shall meet the requirements of 3.10. The classification of defects in FED-STD-162 shall be used to determine and evaluate defects through visual inspection.

4.7 Tests. Sample hose sections and metal liner selected shall be subjected to the applicable tests specified in 4.7.1 through 4.7.3.

4.7.1 Complete hose assembly tests.

4.7.1.1 Hose length measurement (see 3.3). Each hose selected shall be measured for length in accordance with ASTM D380 to determine conformance to 3.3.

4.7.1.2 Proof pressure (see 3.5.1). Each hose assembly shall be proof pressure tested in accordance with ASTM D380. The following details shall apply:

a. The hose assembly shall be subjected to the 1250 psig (17 MPa (gauge)) hydrostatic proof test pressure specified in 3.5.1.
b. Water shall be used as the test media.
c. A vertical (hanging) hydrostatic proof pressure test shall be performed when specified (see 6.2).
d. The proof pressure shall be held for 15 minutes and the hose and fittings examined for leakage or other evidence of weakness.
e. Individual hose assemblies shall be rejected if they fail to meet the requirements of 3.5.1.

4.7.2 Hose without metal liner tests.

4.7.2.1 Hose size (see 3.4). Hose selected shall have the inside and outside diameter measured in accordance with ASTM D380 to determine conformance to 3.4.

4.7.2.2 Unit weight (see 3.4). The unit weight of hose selected shall be determined by weighing the hose without couplings. The readings shall be accurate to the closest tenth of a pound (0.05 kg). The weight of the hose shall be divided by its length to determine conformance to 3.4.

4.7.2.3 Ozone resistance test (see 3.6). Specimens of the cover shall meet the requirements of 3.6. The following details shall apply:

a. The samples shall be tested in accordance with ASTM D1149 method B procedure B2.
b. After conditioning for 24 hours in an ozone-free atmosphere, the looped specimens shall be exposed for 336 ± 1.0 hours at 104°F ± 2°F (40°C ± 1°C) to an ozone concentration of 100 ± 10 parts of ozone per hundred million parts of air by volume.

4.7.2.4 Steam resistance test (see 3.7). A 3-foot (914 mm) hose length sample removed from the additional 8-foot (2438 mm) hose length submitted with the first article shall be used for the following steam test:

a. The outer surface of the hose shall be visually examined for imperfections. The inner surface of the hose shall be examined for surface imperfections by use of a source of light which shall be held at one end while the hose is looked through from the other end. The condition of the tube surface shall be recorded.

b. A steam trap shall be installed at the outlet end of the test sample. The trap shall be designed to keep the pressure at 190 psig min - 210 psig max (1.3 MPa (gauge) min - 1.5 MPa (gauge)) max

and the temperature at 369°F min - 406°F max (187°C min - 208°C max). In addition, "V" steam strainer shall be installed at end of test manifold to trap rubber particles that may separate from the hose tube. Clamp separate from the hose tube. Clamp test hose horizontally between two steam manifolds and subject it to steam at 200 psig (1.4 MPa (gauge)), 388°F (198°C) for periods of 23.5 hours, until a total time of 1,500 hours has elapsed.

c. At the end of each steaming period (not more than 23.5 hours), the pressure shall be released in order that pressure be returned to atmospheric conditions within a time of 1 minute or less. Care shall be taken to ensure that condensation will not be drained from the hose. The hose shall remain at atmospheric conditions for not less than 30 minutes, after which the steam pressure shall again be raised to 200 psig (1.4 MPa (gauge)) and held another 23.5 hours during the steaming period. The above cycle shall be repeated until the hose has been subjected to 1,500 hours of steam pressure.

d. Upon completion of 1,500 hours of steaming, the hose shall be removed from the test apparatus and the outer and inner tube surfaces shall be examined (see 4.7.2.4 (a)) for signs of damage. Except for indentation resulting from clamping, any flaking, peeling, blistering, cracking, or popcorning of the cover or tube shall be cause for rejection.

e. If the hose passes the above visual examination, the hose shall be cooled to 70°F ± 5°F (21°C ± 3°C). The hose shall then be bent in a 180-degree arc around a 20-inch (508 mm) mandrel. The outer cover of the hose shall have no visual signs of cracking.

f. The length of hose shall be subjected to the burst test specified in 4.7.2.5.

4.7.2.5 Burst resistance (see 3.5.2). The hose sample shall be subjected to the hydrostatic straight bursting test as specified in ASTM D380. Water shall be used as the test media. Any suitable coupling other than those specified in 3.4.3 may be used for this test. Failure of the hose at a pressure below the 2500 psig (17 MPa (gauge)) burst pressure specified in 3.5.2 shall be cause for rejection.

4.7.3 Metal liner tests (see 3.2.1 and 3.4.2). The metal liner shall be subjected to the tests specified in 4.7.3.1 through 4.7.3.3 to determine conformance to 3.2.1 and 3.4.2.

4.7.3.1 Inside diameter (see 3.4). The inside diameter of the metal liner shall be measured in accordance with ASTM D380 and meet the requirements of 3.4.

4.7.3.2 Thickness (see 3.4). The thickness of the metal liner shall be measured in accordance with ASTM D380 and meet the requirements of 3.4.

4.7.3.3 Chemical composition (see 3.4.2). The chemical composition of the metal liner shall be determined in accordance with ASTM A751. Failure to comply with the applicable composition specified in 3.4.2 shall be cause for rejection of the lot.

5. PACKAGING

5.1 Packaging. For acquisition purposes, the packaging requirements shall be as specified in the contract or order (see 6.2). When packaging of material is to be performed by DoD or in-house contractor personnel, these personnel need to contact the responsible packaging activity to ascertain packaging requirements. Packaging requirements are maintained by the Inventory Control Point's packaging activities within the Military Service or Defense Agency, or within the Military Department's System Command. Packaging data retrieval is available from the managing Military Department's or Defense Agency's automated packaging files, CD-ROM products, or by contacting the responsible packaging activity.

6. NOTES

(This section contains information of a general or explanatory nature that may be helpful, but is not mandatory.)

6.1 Intended use. Hose covered by this specification is intended for temporary service for heavy-duty high-pressure steam applications. The hose assemblies covered by this specification are military unique since they must insure operability and interchangeability with existing applications.

6.2 Acquisition requirements. Acquisition documents should specify the following:

a. Title, number, and date of this specification.
b. Title, number, and date of the applicable specification sheet and the complete PIN.
c. When first article is required for inspection and approval (see 3.1, 4.4, and 6.3).
d. Vertical hanging proof pressure testing required (see 4.7.1.2 (c)).
e. Materials certification or testing per material specification (see 3.10 and table VI).
f. Disposition of samples (see 4.4.5).
g. Shelf life requirements (see 6.2.1)
h. Packaging (see 5.1).

6.2.1 Shelf life. This specification covers items where the assignment of a Federal shelf-life code is a consideration. Specific shelf life requirements should be specified in the contract or purchase order, and should include as a minimum, shelf-life code, shelf life package markings in accordance with MIL-STD-129 or FED-STD-123, preparation of a materiel quality storage standard for type II (extendible) shelf-life items, and a minimum of 85 percent shelf-life remaining at time or receipt by the Government. These and other requirements, if necessary, are in DoD 4120.27-M, *Shelf-life Management Manual.* The shelf-life codes are in the Federal Logistics Information System Total item Record. Additive information for shelf-life management may be obtained from DoD 4120.27-M, or the designated shelf-life Points of Contact (POC). The POC should be contacted in the following order: (1) the Inventory Control Points that manage the item and (2) the DoD Service and Agency administrators for the DoD Shelf-Life Program. Appropriate POCs for the DoD Shelf-Life Program can be contacted through the DoD Shelf Life Management website: https//www.shelflife.hq.dla.mil/.

6.3 First article. When a first article inspection is required, the item will be tested and should be a first production item or it may be a standard production item from the contractor's current inventory as specified in 4.4.2.1. The first article should consist of one hose assembly. The contracting officer should include specific instructions in acquisition documents regarding arrangements for examination, test, disposition of samples, and approval of the first article.

6.4. Metal liner. The stainless steel interlocked, flexible tubing specified in 3.4.2 should be equal to stainless steel interlocked, flexible tubing available from Able Metal Hose, (http://www.ablemetalhose.com/) with the designation “Type UI Floppy Tubing” or from Federal Hose Manufacturing Corporation, (http://www.federalhose.com/), with the designation “Flexible Hose Stainless Steel”.

6.5 End fittings. The end fittings with the special stem design specified in 3.4.3 should be equal to end fittings with special stem design available from Dixon Valve and Coupling Company, http://www.dixonvalve.com/. The male fitting should be “Easy Boss Style GM-28” and the female fitting should be either “Easy Boss Style GB-28C” using copper insert in the female spud or “Easy Boss Style GM-28” using polymer insert in the female spud.

6.5.1 Patent notice. The end fittings are covered by the following patent: U.S. patent number 4,603,888; expires September 18, 1999. The Government does not have a royalty-free license.

6.6 Environmentally preferable material. Environmentally preferable materials should be used to the maximum extent possible to meet the requirements of this specification. As of the dating of this document, the U.S. Environmental Protection Agency (EPA) is focusing efforts on reducing 31 priority chemicals. The list of chemicals and additional information is available on their website at http://www.epa.gov/osw/hazard/wastemin/priority.htm. Included in the list of 31 priority chemicals are cadmium, lead, and mercury. Use of these materials should be minimized or eliminated unless needed to meet the requirements specified herein (see section 3).

6.7 Subject term (keyword) listing.

Hydrostatic tests
Ozone

6.8 Changes from previous issue. Marginal notations are not used in this revision to identify changes with respect to the previous issue due to the extensiveness of the changes.

CONCLUDING MATERIAL

Custodians:
Army - AT
Navy - SH
Air Force - 99
DLA - CC

Review activities:
Navy - MC, SA
Air Force - 71

Preparing activity:
DLA - CC

(Project 4720-2008-039)

NOTE: The activities listed above were interested in this document as of the date of this document. Since organizations and responsibilities can change, you should verify the currency of the information above using the ASSIST Online database at http://assist.daps.dla.mil.