INCH-POUND
MIL-DTL-24779D(SH)
16 March 2015
SUPERSEDING
MIL-DTL-24779C(SH)
8 January 2013

DETAIL SPECIFICATION

ANODES, SACRIFICIAL, ALUMINUM ALLOY

Comments, suggestions, or questions on this document should be addressed to: Commander, Naval Sea Systems Command, ATTN: SEA 05S, 1333 Isaac Hull Avenue, SE, Stop 5160, Washington Navy Yard DC 20376-5160 or emailed to CommandStandards@navy mil, with the subject line "Document Comment". Since contact information can change, you may want to verify the currency of this address information using the ASSIST Online database at https://assist.dla.mil.

AMSC N/A FSC 3426

DEPARTMENT OF THE NAVY
NAVAL SEA SYSTEMS COMMAND
1333 ISAAC HULL AVE SE
WASHINGTON NAVY YARD DC 20376-0001

IN REPLY REFER TO
9078
Ser 05P/032
MAR 1 6 2015

From: Commander, Naval Sea Systems Command (SEA 05)

Subj: CHIEF ENGINEER'S INTENT FOR INSTALLATION AND MAINTENANCE OF ALUMINUM SACRIFICIAL ANODES

Ref: (a) MIL-DTL-24779D(SH), Anodes, Sacrificial, Aluminum Alloy

1. Purpose. The Naval Sea Systems Command (NAVSEA) Chief Engineer's (CHENG's) intent for the changes in MIL-DTL-24779D(SH) is to reduce the cost associated with installation and maintenance of aluminum sacrificial anodes.

2. Discussion. A new anode type is being added to support VIRGINIA Class sail anode design and maintenance. The new anode utilizes bolting instead of welding as the attachment method, resulting in reduced replacement man-hours. In support of the DDG 1000 Class, a new anode type/shape is added to avoid future logistics and supply issues.

3. Action. The use of reference (a) is encouraged and is expected to reduce the installation, maintenance, and logistics cost of aluminum anodes on surface ships and submarines. Should you find the intent of reducing the installation and maintenance cost is not being realized upon the use of this revision, please inform the point of contact below.

4. Point of Contact. For information pertaining to conventional and low voltage aluminum alloy sacrificial anodes (MIL-DTL-24779), please contact SEA 05P, Matthew Garner, Director, Ship Integrity and Performance, (202) 781-0127, matthew.garner@navy.mil.

L. B. FULLER
By direction

Affixed to: MIL-DTL-24779D(SH)

This specification is approved for use by the Naval Sea Systems Command, Department of the Navy, and is available for use by all Departments and Agencies of the Department of Defense.

1. SCOPE

1.1 Scope. This specification covers conventional and low voltage aluminum alloy sacrificial anodes in the form of plates, slabs, discs, and rods for corrosion protection (cathodic protection) of metals and alloys. It also includes features of anode design and fabrication, such as cast-in cores for mounting purposes. The material described by this specification contains elements for which the Occupational Safety and Health Administration (OSHA) has set standards for exposure limits. Handling, storage, and application of this material should be in accordance with the 29 CFR 1910 and 1915 and any other safety and health regulations (local or otherwise) which may apply.

1.2 Classification. Anodes are of the following types and styles, as specified (see 6.2). Anodes that require a higher degree of tolerance in either machining or casting are designated by "-CT".

1.2.1 Conventional aluminum types.

a. Type AHS – Aluminum, hull slab (steel strap core) (see figures A-1 to A-3)

b. Type ASS – Aluminum, submarine slab (steel strap core) (see figures A-5, A-7, A-8, and A-11)

c. Type ATS – Aluminum, teardrop shape (steel strap core) (see figure A-12)

d. Type AHC – Aluminum, hull slab (steel core) (see figures A-13 to A-15 and A-18 to A-19)

e. Type AEP – Aluminum, fairwater slab (pipe core or pipe bushing core) (see figures A-22 to A-34)

(1) Style A – Square slab (see figures A-22 and A-23)

(2) Style B – Circular slab (see figures A-24 to A-33)

(3) Style C – Semi-circular slab (see figure A-34)

f. Type ABP – Aluminum, bar (pipe core) (see figure A-35)

g. Type ABS – Aluminum, submarine bar (steel strap core) (see figure A-36)

h. Type APN – Aluminum, plate (no core) (see figures A-37 to A-38)

1.2.2 Low voltage aluminum types.

a. Type LHS – Low Voltage Aluminum, hull slab (steel strap core) (see figures A-1 to A-4)

b. Type LSS – Low Voltage Aluminum, submarine slab (steel strap core) (see figures A-5 to A-11)

c. Type LTS – Low Voltage Aluminum, teardrop shape (steel strap core) (see figure A-12)

d. Type LHC – Low Voltage Aluminum, hull slab (steel core) (see figures A-13 to A-21)

e. Type LEP – Low Voltage Aluminum, fairwater slab (pipe core or pipe bushing core) (see figures A-22 to A-34)

(1) Style A – Square slab (see figures A-22 and A-23)

(2) Style B – Circular slab (see figures A-24 to A-33)

(3) Style C – Semi-circular slab (see figure A-34)

f. Type LBP – Low Voltage Aluminum, bar (pipe core) (see figure A-35)

g. Type LBS – Low Voltage Aluminum, submarine bar (steel strap core) (see figure A-36)

h. Type LPN – Low Voltage Aluminum, plate (no core) (see figures A-37 and A-38)

i. Type LES – Low Voltage Aluminum, anode (I-beam with welded bushing core) (see figures A-40 and A-41)

(1) Style A – Chamfered rectangular slab (see figure A-40)

(2) Style B – Square slab (see figure A-41)

1.2.3 Close tolerance low voltage aluminum types.

a. Type LEP-B-CT – Low Voltage Aluminum, Close Tolerance, fairwater slab (pipe core or pipe bushing core) (see figure A-39)

b. Type LSS-CT – Low Voltage Aluminum, Close Tolerance, submarine slab (steel strap core) (see figure A-42)

1.2.4 Other anode geometries. Other geometries are acceptable as approved by NAVSEA.

a. Type LRN – Low Voltage Aluminum, rod shape (no core) (see figure A-43)

b. Type LDM – Low Voltage Aluminum, segmented disk (see figures A-44 to A-47)

c. Type LMP – Low Voltage Aluminum, mooring chain (pipe core) (see figure A-48)

1.3 Key to symbols. The letter designations for the types of anodes are shown in table I. For detailed drawings of all anode types, see Appendix A.

TABLE I. Letter designations of anode types.

First letter (designates anode metal)	**Second letter (designates shape or general use)**	**Third letter (designates core)**
A – (aluminum)	H – (hull slab)	S – (steel strap)
L – (low voltage aluminum)	S – (submarine slab)	C – (core strap)
	T – (teardrop shape)	P – (pipe core)
	E – (fairwater slab)	N – (no core)
	P – (plate)	
	B – (bar, square)	
	R – (rod shape)	
	D – (segmented disk)	
	M – (mooring chain)	

2. APPLICABLE DOCUMENTS

2.1 General. The documents listed in this section are specified in sections 3 and 4 of this specification. This section does not include documents cited in other sections of this specification or recommended for additional information or as examples. While every effort has been made to ensure the completeness of this list, document users are cautioned that they must meet all specified requirements of documents cited in sections 3 and 4 of this specification, whether or not they are listed.

2.2 Government documents.

2.2.1 Specifications, standards, and handbooks. The following specifications, standards, and handbooks form a part of this document to the extent specified herein. Unless otherwise specified, the issues of these documents are those cited in the solicitation or contract.

DEPARTMENT OF DEFENSE SPECIFICATIONS

MIL-DTL-18001 - Anodes, Sacrificial Zinc Alloy

(Copies of this document are available online at http://quicksearch.dla.mil/.)

2.2.2 Other Government documents, drawings, and publications. The following other Government documents, drawings, and publications form a part of this document to the extent specified herein. Unless otherwise specified, the issues of these documents are those cited in the solicitation or contract.

CODE OF FEDERAL REGULATIONS (CFR)

29 CFR 1910 - Occupational Safety and Health Standards

29 CFR 1915 - Occupational Safety and Health Standards for Shipyard Employment

(Copies of these documents are available online at www.gpoaccess.gov/index html.)

2.3 Non-Government publications. The following documents form a part of this document to the extent specified herein. Unless otherwise specified, the issues of these documents are those cited in the solicitation or contract.

ASTM INTERNATIONAL

ASTM A36/A36M - Standard Specification for Carbon Structural Steel

ASTM A108 - Standard Specification for Steel Bar, Carbon and Alloy, Cold-Finished

ASTM A524 - Standard Specification for Seamless Carbon Steel Pipe for Atmospheric and Lower Temperatures

ASTM E34 - Standard Test Methods for Chemical Analysis of Aluminum and Aluminum-Base Alloys

ASTM E290 - Standard Test Methods for Bend Testing of Material for Ductility

ASTM E1251 - Standard Test Method for Analysis of Aluminum and Aluminum Alloys by Spark Atomic Emission Spectrometry

(Copies of these documents are available online at www.astm.org.)

EUROPEAN COMMITTEE FOR STANDARDIZATION

BS EN 10025-1 - Hot Rolled Products of Structural Steel. General Technical Delivery Conditions

BS EN 10305-1 - Steel Tubes for Precision Applications. Technical Delivery Conditions. Seamless Cold Drawn Tubes.

(Copies of these documents are available online from BSI at http://shop.bsigroup.com/.)

NACE INTERNATIONAL (NACE)

NACE TM0190 - Impressed Current Laboratory Testing of Aluminum Alloy Anodes

(Copies of this document are available online at www.nace.org.)

THE SOCIETY FOR PROTECTIVE COATINGS (SSPC)

SSPC SP-10 - Near-White Blast Cleaning

(Copies of this document are available online at www.sspc.org.)

2.4 Order of precedence. Unless otherwise noted herein or in the contract, in the event of a conflict between the text of this document and the references cited herein, the text of this document takes precedence. Nothing in this document, however, supersedes applicable laws and regulations unless a specific exemption has been obtained.

3. REQUIREMENTS

3.1 Qualification. Anodes furnished under this specification shall be products that are authorized by the qualifying activity for listing on the applicable qualified products list before contract award (see 4.2 and 6.3).

3.2 Material. The material described by this specification contains elements for which the Occupational Safety and Health Administration (OSHA) has set standards for exposure limits. Handling and application of aluminum anode material shall be in accordance with 29 CFR 1910 and 29 CFR 1915 and any other safety/health regulations (local or otherwise) that may apply.

3.2.1 Chemical composition. The chemical composition shall be within the ranges listed in table II (see 4.6.5.1 through 4.6.5.4). Any changes in formulation, ingredients, manufacturing processes, or manufacturing locations (specifically in indium, gallium, zinc, or silicon) outside of the originally qualified range shall be approved by NAVSEA.

TABLE II. Chemical composition.

Element	**Conventional aluminum**	**Low voltage aluminum**
	Weight (percent)	**Weight (percent)**
Indium [1/]	0.014 – 0.020	<0.005
Gallium [1/]	<0.02	0.092 – 0.110
Zinc [1/]	4.0 – 6.5	<0.15
Silicon	0.08 – 0.20	<0.10
Copper	<0.005	
Iron	<0.08	
Mercury	<0.0001	
Tin	<0.001	
Nickel	<0.005	
Magnesium	<0.010	
Manganese	<0.010	
Bismuth	<0.002	
Cadmium	<0.002	
Titanium	<0.002	
Lead	<0.002	
Boron	<0.001	
Aluminum [1/]	Remainder	Remainder

NOTE:
[1/] Indium, gallium, zinc, and aluminum raw material purity shall be a minimum 99.8 percent by weight.

3.2.2 Recycled, recovered, environmentally preferable, or biobased materials. Recycled, recovered, environmentally preferable, or biobased materials should be used to the maximum extent possible, provided that the material meets or exceeds the operational and maintenance requirements, and promotes economically advantageous life cycle costs.

3.2.3 Storage. The aluminum anode shall be stored under cover and both top and bottom of each strap and threaded insert shall get a coating of a light grease or corrosion inhibitor to minimize atmospheric corrosion of the straps during storage (see 4.5.2).

3.3 Service performance. The aluminum alloy anodes covered by this specification shall remain electrochemically active and provide continuous in-service cathodic protection until the anodes are consumed. Anode properties shall meet the requirements specified in section 3, given the range of operating conditions normally encountered during extended marine service (for example, transition from sea to brackish water, or varying seawater temperatures, and salinity).

3.3.1 Conventional aluminum anode qualification.

3.3.1.1 Long-term seawater immersion performance. The anode current capacity calculated shall be at least 1150 ampere-hours per pound (2535 ampere-hours per kilogram) for each anode, when tested in accordance with 4.6.1. In addition, the free corrosion potential of each anode tested at the end of the long-term seawater immersion test shall be between -1.05 and -1.15 volts versus saturated silver/silver chloride in seawater.

3.3.1.2 Short-term electrochemical performance. Short-term electrochemical tests shall be conducted in accordance with 4.6.2. Required anode current capacity shall be at least 1150 ampere-hours per pound (2535 ampere-hours per kilogram) for each anode and the anode operating potential of each anode shall be between -1.05 and -1.15 volts versus saturated silver/silver chloride in seawater.

3.3.2 Low voltage aluminum anode qualification.

3.3.2.1 Long-term seawater immersion performance. The anode current capacity shall be at least 750 ampere-hours per pound (1656 ampere-hours per kilogram) for each anode, when tested in accordance with 4.6.1. In addition, the free corrosion potential of each anode tested at the end of the long-term seawater immersion test shall be between -0.800 and -0.900 volt versus saturated silver/silver chloride in seawater.

3.3.2.2 Short-term electrochemical performance. Short-term electrochemical tests shall be conducted in accordance with 4.6.2. Required anode current capacity of each anode shall be a minimum of 816 ampere-hours per pound (1800 ampere-hours per kilogram) and the anode operating potential of each anode shall be between -0.780 and -0.830 volt versus saturated silver/silver chloride in seawater.

3.4 Construction.

3.4.1 Steel straps/cores. Type AHS/LHS, ASS/LSS, ATS/LTS, ABS/LBS, and AHC/LHC anodes shall have strap cores of a steel material in accordance with ASTM A36/A36M or BS EN 10025-1.

3.4.2 Pipe cores. Type ABP/LBP, AEP/LEP, LDM, and LMP anodes shall have core inserts from mild steel pipe or pipe couplings in accordance with ASTM A524 or BS EN 10305-1.

3.4.3 I-beam with welded bushing core. Type LES shall have an I-beam welded to threaded bushing as shown on figures A-40 and A-41. Steel material shall be in accordance with ASTM A36/A36M and ASTM A108 or BS EN 10025-1 or BS EN10305-1.

3.4.4 Steel core surface preparation. Steel core material shall be free of surface oxides such as rust, or other coatings including galvanizing, cadmium, or tin. The steel core shall be abrasive blasted to a near white finish in accordance with SSPC SP-10 and cast within the aluminum anode within 4 hours after blasting to ensure minimal buildup of surface oxides.

3.4.5 Type LRN anodes (no core). The anodes shall pass the tests demonstrating mechanical properties (see 3.8) and other requirements covered by this specification.

3.4.6 Weight. Minimum weight requirements are specified on figures A-1 through A-48. The total weight of the specified type of anode received divided by the total number of anodes of that type shall be equal to or greater than the minimum weight of anode type specified (see 4.5).

3.4.7 Dimensions. Anode dimensions shall be as specified on figures A-1 through A-48 (see 4.5). Table III provides additional information regarding dimensions, tolerances, and the mounting of anodes.

3.4.7.1 Stud hole elongation of ASS/LSS type anodes. When specified (see 6.2), ASS/LSS straps may be modified as shown on figure A-11.

TABLE III. Dimension, tolerance, and mounting notes.

Conventional anode type	Figures (conventional anode type)	Low voltage anode type	Figures (LVA type)	Comments
AEP	A-24 to A-33	LEP	A-24 to A-33	The diameter of Type AEP/LEP Style B anodes shall not vary by more than 0.13 inch (3.3 millimeters) from the specified diameter.
AHS	A-1 to A-3	LHS	A-1 to A-4	Cores and straps for anode Types AHS/LHS, ASS/LSS, ABS/LBS, and AHC/LHC shall be positioned so they are embedded 0.25 inch (6.4 millimeters) -0.06 inch (1.5 millimeters) +0.13 inch (3.3 millimeters), as shown on figures A-1 to A-11 and A-13 to A-21, which may be measured from either surface, as applicable.
ASS	A-5, A-7, A-9	LSS	A-5 to A-11	
AHC	A-13, A-14, A-15, A-18, A-19	LHC	A-13 to A-21	
ABS	A-36	LBS	A-36	
ATS	A-12	LTS	A-12	Cores and straps for anode Type ATS/LTS shall be positioned so they are embedded 0.25 inch (6.4 millimeters) ±0.13 inch (3.3 millimeters), as shown on figure A-12, which may be measured from either surface, as applicable.
AHC	A-15, A-19	LHC	A-15, A-17, A-19, A-21	The Type AHC/LHC anodes shown on figures A-15, A-17, A-19, and A-21 are intended for use with rubber washers. Countersinks for rubber washers shall be cast or machined. The anodes shall be manufactured so the countersinks are centered on the core straps.
ASS	A-5, A-7, A-9	LSS	A-5 to A-11	Type ASS/LSS anodes shown on figures A-5 to A-11 may be mounted by welding or by fasteners. Those intended to be attached by fastener shall have appropriate mounting holes in the straps.
AEP	A-22 to A-34	LEP	A-22 to A-34	For Type AEP/LEP and ABP/LBP anodes, the position of the pipe core insert shall not vary more than 0.13 inch (3.3 millimeters) from the center.
ABP	A-35	LBP	A-35	
---	---	LES [1/]	A-40, A-41	For Type LES anodes, the position of the I-beam insert shall not vary more than 0.13 inch (3.3 millimeters) from the center.

NOTE:

[1/] LVA Type only.

3.4.7.2 Close tolerance dimensions. Some applications require more stringent dimensional and tolerance control. These geometries are designated with a "-CT" following their classification type and style as specified in 1.2.3. Table IV provides additional information regarding dimensions, tolerances, and the mounting of anodes. Other geometries are acceptable as approved by NAVSEA.

TABLE IV. Dimension, tolerance, and mounting notes for close tolerance conventional and low voltage aluminum anodes.

Low voltage anode type	Figure	Comments
LSS-10-CT	A-42	Cores and straps for anode Types LSS-10-CT shall be positioned so they are embedded 0.39 inch (10 millimeters) ±0.08 inch (2 millimeters), as shown on figure A-42, which may be measured from either surface, as applicable.
LEP-B-CT	A-39	For Type LEP-B-CT anodes, the position of the pipe core insert shall not vary more than 0.13 inch (3.3 millimeters) from the center.

3.5 Marking. Each anode shall be cut or die-stamped with the manufacturer's symbol and a unique, nonrecurring heat number specific to production lot. All anodes in this specification shall have the anode type and the words "DO NOT PAINT" die-stamped or cast on the exposed face of the anodes as specified on figures A-1 through A-48.

3.6 Workmanship. Consistent with good commercial practice, the aluminum anodes shall be free of flash, burrs, cracks, blow holes, and surface slag (see 4.5). The cast anodes shall be free of shrinkage cavities exceeding 0.25 inch (6.35 millimeters) in depth, except that anodes 2 inches (5.08 centimeters) thick or more shall be free of shrinkage cavities exceeding 0.375 inch (9.53 millimeters) in depth, when measured from a straight edge placed diagonally across the opposite edges of the anode. In addition to the above allowable shrinkage cavities, surface irregularities including cracks and blowholes on the anode exceeding 0.125 inch (3.18 millimeters) in depth shall not be permitted on one face of slab or disc type anodes unless at least 0.125 inch (3.18 millimeters) of sound metal covers the entire strap. Metal core extension from the anode shall be smooth and free of sharp burrs.

3.7 Core bonding. The gap between the aluminum alloy and the steel strap/core shall be less than 0.002 inch (50.8 micrometers) for at least 50 percent of the interfacial length (see 4.6.3).

3.8 Bend. After bending, no anode shall have cracks greater than 0.125 inch (0.3175 centimeter) in length or width (see 4.6.4).

4. VERIFICATION

4.1 Classification of inspections. The inspection requirements specified herein are classified as follows:

a. Qualification inspection (see 4.2).

b. Conformance inspection (see 4.3).

4.2 Qualification inspection. Qualification inspection of anodes shall include a long-term seawater immersion test of at least four Type ASS-10/LSS-10 anodes of 12 months or longer duration (see 4.6.1) and a short-term electrochemical test (see 4.6.2). Additional qualification test requirements are specified in table V. Anode types may be modified with approval from NAVSEA.

4.3 Conformance inspection. Conformance inspection shall consist of the examinations and tests specified in 4.5, and 4.6.2 through 4.6.5.

4.3.1 Sampling lot. For the purpose of sampling, a lot shall consist of all anodes of the same type and style poured from one homogenous heat or melt of a single charge of raw materials. The addition of any material to the heat or melt at any time constitutes a new lot.

4.3.2 Rejection criteria. Failure to meet requirements in any sample shall result in the rejection of the entire lot.

4.4 Summary of requirements and tests/examinations. Table V summarizes the requirements and corresponding tests/examinations (with reference sections) for verification of satisfying each requirement.

TABLE V. Summary of requirements and tests/examinations.

Requirement paragraph	Requirement	Qualification	Conformance	Test/examination paragraph
3.3.1.1 and 3.3.2.1	Long-term seawater immersion performance	**X**		4.6.1
3.3.1.2 and 3.3.2.2	Short-term electrochemical performance	**X**	**X**	4.6.2
3.4.6, 3.4.7, 3.6	Weight, dimensions, and workmanship	**X**	**X**	4.5
3.7	Core bonding	**X**	**X**	4.6.3
3.8	Bend (APN/LPN only)	**X**	**X**	4.6.4
3.2.1	Chemical composition	**X**	**X**	4.6.5

4.5 Examination.

4.5.1 Sampling for examination. A random sample of anodes shall be selected from each lot as specified in table VI.

TABLE VI. Sampling for examination.

Lot size	Sample size
3 – 25	3
26 – 50	5
51 – 90	6
91 – 150	7
151 – 280	10
281 – 500	11
501 – 1,200	15
1,201 – 3,200	18
3,201 – 10,000	22
10,001 – over	29

4.5.2 Examination procedure. Anodes selected as specified in 4.5.1 shall be measured for weight and dimension, and visually inspected under 10 times magnification for workmanship (see 3.4.6, 3.4.7, and 3.6). If the weight is less than the minimum weight for the type of anode specified or not within the tolerances allowed by this specification, it shall be cause for rejection of the entire lot. For aluminum anodes, the top and bottom of each strap shall be coated with a light grease or corrosion inhibitor (see 3.2.3).

4.6 Test methods.

4.6.1 Long-term seawater immersion test.

4.6.1.1 Long-term seawater immersion test site requirements. The test site shall be on or near the ocean or an estuary thereof, providing an undiluted natural seawater environment to within a 3-foot spherical radius of each anode in test. Similarly, not less than 80 percent of the immersed portion of the "infinite steel cathode" shall be immersed in undiluted natural seawater. These requirements shall be maintained during all seasons and tidal conditions. This allows for some surface dilution from rain and river sources. The "infinite steel cathode" shall have sufficient exposed steel surface area to permit galvanic coupling of all anodes in test without significant cathodic polarization of the steel.

4.6.1.2 Long-term seawater immersion test procedures.

a. Each of four ASS-10/LSS-10 anodes chosen at random from a representative heat of a production run of anodes shall be galvanically coupled to an "infinite steel cathode" in seawater for a minimum period of 1 year.

(1) This test shall run concurrently with a test of at least two ZSS-24 zinc anodes in accordance with MIL-DTL-18001 for comparative purposes.

b. The anodes shall then be weighed to the nearest 0.1 pound (45.36 grams) on a certified calibrated balance.

c. The anode shall be mounted to a dielectric plate of minimum dimensions equivalent to the width and length of the anode to further preclude the possibility of corrosion of the back surface causing loss of the anode.

d. Six-gauge copper wire shall be used to galvanically couple each anode through no more than a 1-ohm shunt resistor to an infinite steel seawall.

(1) All underwater electrical connections shall be sufficiently waterproof to survive the duration of the test without loss of continuity.

(2) The shunt shall be used to monitor current weekly.

e. Anodes shall be immersed at least 9.84 feet (3 meters) below low tide level and separated from each other by a minimum distance of 8 feet (2.44 meters).

f. Individual anode current shall be measured weekly by measuring a voltage drop across no more than a 1-ohm shunt resistor to an accuracy of 0.1 millivolt.

g. Potential of the seawall shall be measured monthly at each anode site immediately adjacent to the seawall. Potential of the seawall shall not measure more negative than -700 millivolts with respect to a silver/silver-chloride reference cell at any site.

h. Upon conclusion of the test, electrical connections to the seawall are to be disconnected and the anodes shall remain in seawater. One hour after disconnection, each anode open-circuit potential shall be measured.

i. All anodes shall then be removed from seawater, all electrical connections removed from each anode, and the anodes shall be cleaned with a high-pressure water blast to remove fouling and corrosion products.

j. Each anode shall again be weighed to the nearest 0.1 pound (45.36 grams), and weight loss measured.

k. A plot of current as a function of time shall be produced for each anode. The area under the current versus time curve shall be integrated to determine the total charge passed in ampere-hours.

l. The anode current capacity for each anode shall be determined by dividing the total charge passed in ampere-hours by each anode's weight loss in pounds (or kilograms).

4.6.2 Short-term electrochemical test. Two anodes shall be selected, one from the start and end of each lot, for the anode operating potential and current capacity characteristics test. The anode operating potential and current capacity characteristics shall be determined in accordance with NACE TM0190.

4.6.3 Core bonding test.

4.6.3.1 Sampling for core bond tests. Two anodes from each lot shall be selected at random for the core bonding test.

4.6.3.2 Resampling. In cases where one of the two anodes tested fails to pass the core bond test, four additional anodes may be selected for retest at the discretion of the manufacturer.

4.6.3.3 Core bonding test procedure. Each anode selected to represent the lot shall be cut with a hacksaw or the equivalent along the major axis of each strap or core. The cut surfaces shall be polished with a 60 (or finer) mesh abrasive until the aluminum alloy-steel core/strap interface is distinctly visible. The gap between the aluminum alloy and the steel strap/core shall be less than 0.002 inch (0.005 centimeter, 50 micrometers) for at least 50 percent of the interfacial length when measured with an appropriate device such as a Feeler Gauge. Aluminum alloy anodes may have a bead or buttress not exceeding 0.25 inch (6.35 millimeters) projecting from the anode along the strap/core. The steel strap aluminum alloy interface shall show no evidence of red rust; however, blue or black oxide is acceptable. Evidence of red rust on the cut surface shall be cause for rejection of the lot (see 3.7).

4.6.3.4 Disposition of anodes subjected to core bond tests. All sample anodes shall be discarded and not included in the delivery of material after the core bonding tests are performed.

4.6.4 Bend test. Any evidence of cracking that is greater than 0.125 inch (0.3175 centimeter) in length or width is cause for rejection of the entire lot.

4.6.4.1 Sampling for bend test for types APN/LPN and LRN anodes. At least five anodes of these types shall be selected from each lot for each of these tests.

4.6.4.2 Physical test sample dimensions for types APN/LPN and LRN anodes. APN/LPN test samples shall be cut from the plate anodes and shall be of the following dimensions: width: twice the thickness, length: 12 inches (30.48 centimeters) or to suit the test apparatus. LRN test samples shall be of the following dimensions: length: 12 inches (30.48 centimeters) or to suit the test apparatus.

4.6.4.3 Bend test procedure. Type APN/LPN and LRN anodes shall be bent 45 degrees around a mandrel three times the thickness of the anode being tested. The anodes shall be bent in accordance with ASTM E290. After bending, the convex surface of the specimens shall be visually inspected for cracking (see 3.8).

4.6.5 Chemical analysis.

4.6.5.1 Sampling for chemical analysis. The sample shall be obtained such that the sample represents the bulk material.

4.6.5.2 Chemical analysis methods. Optical Emission Spectrometry (in accordance with ASTM E1251), Atomic Absorption, and D.C. Plasma Spectrophotometric analyses shall be determined by any standard method approved by a non-Government standards body such as the American National Standards Institute or ASTM International (for example, ASTM E34) and accepted by the Government.

4.6.5.3 Determination of zinc, mercury, tin, bismuth, copper, iron, cadmium, titanium, magnesium, nickel, and manganese. The percent composition of these elements in the aluminum alloy shall be determined using Atomic Absorption Spectrophotometry or Optical Emission Spectrometry (see 3.2.1).

4.6.5.4 Determination of indium, gallium, lead, boron, silicon, and aluminum. The percent composition of these elements in the aluminum alloy shall be determined by D.C. Plasma Spectrophotometry or Optical Emission Spectrometry (see 3.2.1).

5. PACKAGING

5.1 Packaging. For acquisition purposes, the packaging requirements shall be as specified in the contract or order (see 6.2). When packaging of materiel is to be performed by DoD or in-house contractor personnel, these personnel need to contact the responsible packaging activity to ascertain packaging requirements. Packaging requirements are maintained by the Inventory Control Point's packaging activities within the Military Service or Defense Agency, or within the military service's system commands. Packaging data retrieval is available from the managing Military Department's or Defense Agency's automated packaging files, CD-ROM products, or by contacting the responsible packaging activity.

6. NOTES

(This section contains information of a general or explanatory nature that may be helpful, but is not mandatory.)

6.1 Intended use. The anodes are intended for use as aluminum alloy sacrificial anodes for the cathodic protection of metals and alloys aboard U.S. Navy ships and submarines. The anodes are not intended for use in any area exposed to flammable material (such as compensating fuel tanks) or where deteriorated pieces of alloy may cause problems (such as for suction inlets).

6.2 Acquisition requirements. Acquisition documents should specify the following:

a. Title, number, and date of this specification.

b. Type and style anode of required (see 1.2.1, 1.2.2, and 1.2.3).

c. When stud hole elongation is allowed (see 3.4.7.1).

d. Packaging requirements (see 5.1).

e. Material safety data sheet (6.4).

6.3 Qualification. With respect to products requiring qualification, awards will be made only for products which are, at the time of award of contract, qualified for inclusion in Qualified Products List QPL No. 24779 whether or not such products have actually been so listed by that date. The attention of the contractors is called to these requirements, and manufacturers are urged to arrange to have the products that they propose to offer to the Federal Government tested for qualification in order that they may be eligible to be awarded contracts or orders for the products covered by this specification. Information pertaining to qualification of products may be obtained from Commander, Naval Sea Systems Command, ATTN: SEA 05S, 1333 Isaac Hull Avenue, SE, Stop 5160, Washington Navy Yard DC 20376-5160 or emailed to CommandStandards@navy.mil. An online listing of products qualified to this specification may be found in the Qualified Products Database (QPD) at https://assist.dla.mil.

6.4 Material safety data sheets. When specified (see 6.2), contracting officers will identify those activities requiring copies of completed Material Safety Data Sheets (MSDS) prepared in accordance with FED-STD-313. In order to obtain the MSDS, FAR clause 52.223-3 must be in the contract.

6.5 Subject term (key word) listing.

Cathodic protection

Hull slab

Submarine slab

6.6 Changes from previous issue. Marginal notations are not used in this revision to identify changes with respect to the previous issue due to the extent of the changes.

CONVENTIONAL AND LOW VOLTAGE ALUMINUM ANODE FIGURES

A.1 SCOPE

A.1.1 Scope. This Appendix defines the geometry and tolerances for conventional and low voltage aluminum sacrificial anodes. This Appendix is a mandatory part of the specification. The information contained herein is intended for compliance.

A.2 APPLICABLE DOCUMENTS

A.2.1 General. The documents listed in this section are specified in this Appendix. This section does not include documents cited in other sections of this document or recommended for additional information or as examples. While every effort has been made to ensure the completeness of this list, document users are cautioned that they must meet all specified requirements of documents cited in this appendix, whether or not they are listed.

A.2.2 Non-Government publications. The following documents form a part of this document to the extent specified herein. Unless otherwise specified, the issues of these documents are those cited in the solicitation or contract.

AMERICAN WELDING SOCIETY (AWS)

AWS D1.1/D1.1M - Structural Welding Code-Steel

(Copies of this document are available online at www.aws.org.)

ASME INTERNATIONAL (ASME)

ASME B1.1 - Unified Inch Screw Threads, (UN and UNR Thread Form)

ASME B1.2 - Gages and Gaging for Unified Inch Screw Threads

ASME Y14.5 - Standard on Geometric Dimensioning and Tolerancing

ASME Y14.38 - Abbreviations and Acronyms for Use on Drawings and Related Documents

(Copies of these documents are available online at www.asme.org)

ASTM INTERNATIONAL

ASTM A36/A36M - Standard Specification for Carbon Structural Steel

ASTM A53/A53M - Standard Specification for Pipe, Steel, Black and Hot Dipped, Zinc Coated, Welded and Seamless

ASTM A108 - Standard Specification for Steel Bar, Carbon and Alloy, Cold-Finished

ASTM A524 - Standard Specification for Seamless Carbon Steel Pipe for Atmospheric and Lower Temperatures

(Copies of these documents are available online at www.astm.org.)

EUROPEAN COMMITTEE FOR STANDARDIZATION

BS EN 288 - Pipe Threads Where Pressure-Tight Joints are not Made on the Threads. Dimensions, Tolerances and Designation

BS EN 10025-1 - Hot Rolled Products of Structural Steel. General Technical Delivery Conditions

BS EN 10305-1 - Steel Tubes for Precision Applications. Technical Delivery Conditions. Seamless Cold Drawn Tubes

(Copies of these documents are available online from BSI at http://shop.bsigroup.com/.)

A.3 NOTES

A.3.1 Dimensions and tolerances. Wherever possible, dimensions and standards have been defined in both U.S./Imperial and International/Metric versions. Where a tolerance is not specifically defined, the default tolerance shall be ±0.13 inch (3.3 millimeters) for linear dimensions and ±2 degrees for angles. Dimensioning shall be interpreted in accordance with ASME Y14.5.

A.3.2 Minimum weights. The minimum weights shown in the drawings are calculated by averaging the CAD-derived "minimum weight". Unless otherwise shown on the figures, these weights include a 4-degree draft, 0.188-inch (4.5-millimeter) radius corner rounds, and core volume is subtracted from the casting volume. The "minimum weight" is calculated from the minimum material tolerances on the casting but with nominal size steel cores. Density of both aluminum alloys (conventional and low voltage) is assumed to be 0.097 pounds per cubic inch (2.70 grams per cubic centimeter). Density of all steel components is assumed to be 0.28 pounds per cubic inch (7.86 grams per cubic centimeter).

A.3.3 Centering of cores. Unless otherwise shown on the figures, all cores shall be centered in the casting to within ±0.13 inch (3.3 millimeters).

A.3.4 Screw threads. Screw threads shall conform to ASME B1.1 unless approved by NAVSEA. Inspection is required with GO/NO GO gauges in accordance with ASME B1.2. Tapped holes shall be countersunk to the major diameter.

A.3.5 Abbreviations. Abbreviations are in accordance with ASME Y14.38.

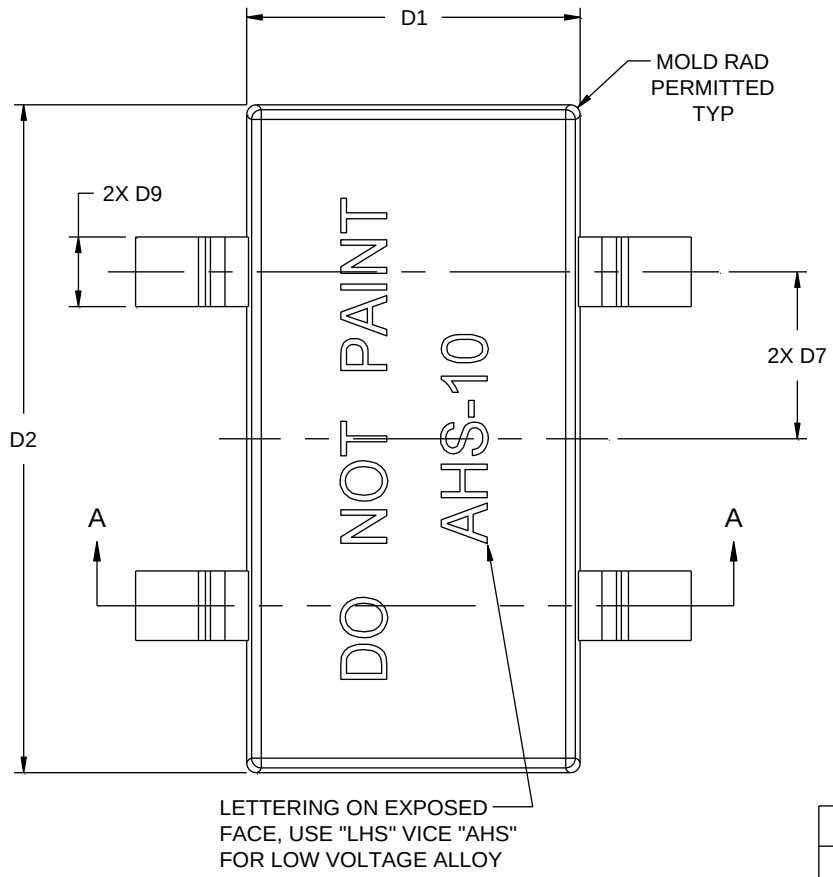

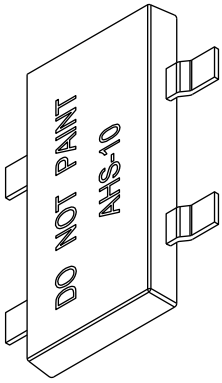

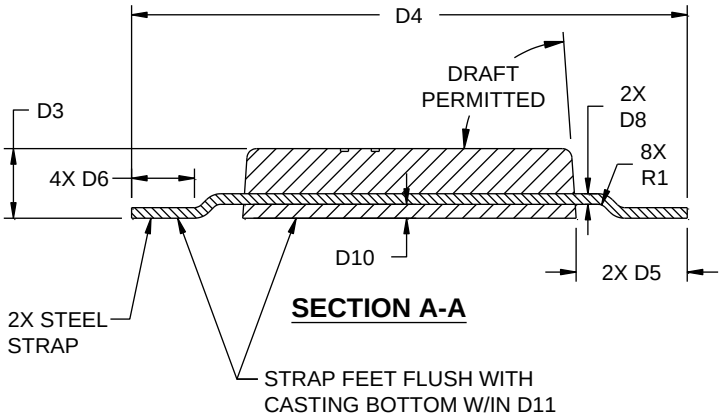

TABLE OF DIMENSIONS		
DIM	IMPERIAL (INCH)	METRIC (MM)
D1	6.00±.13	152.4±3.3
D2	12.00±.13	304.8±3.3
D3	1.25±.13	31.7±3.3
D4	10.00±.13	254±3.3
D5	2.00±.13	50.8±3.3
D6	1.13±.13	28.7±3.3
D7	3.00±.06	76.2±1.6
D8	.19±.02	4.8±.5
D9	1.25±.13	31.7±3.3
D10	.25 +.13/-.06	6.4 +3.3/-1.5
D11	±.06	±1.5
R1	.18 MIN	4.6 MIN

SKETCH A1: HULL SLAB (STEEL STRAPS), 1.25" THICK, TYPE AHS-10 OR LHS-10
MINIMUM WEIGHT = 9.1 LB / 4.1 KG

FIGURE A-1. Aluminum, hull slab (steel straps), type AHS-10/LHS-10.

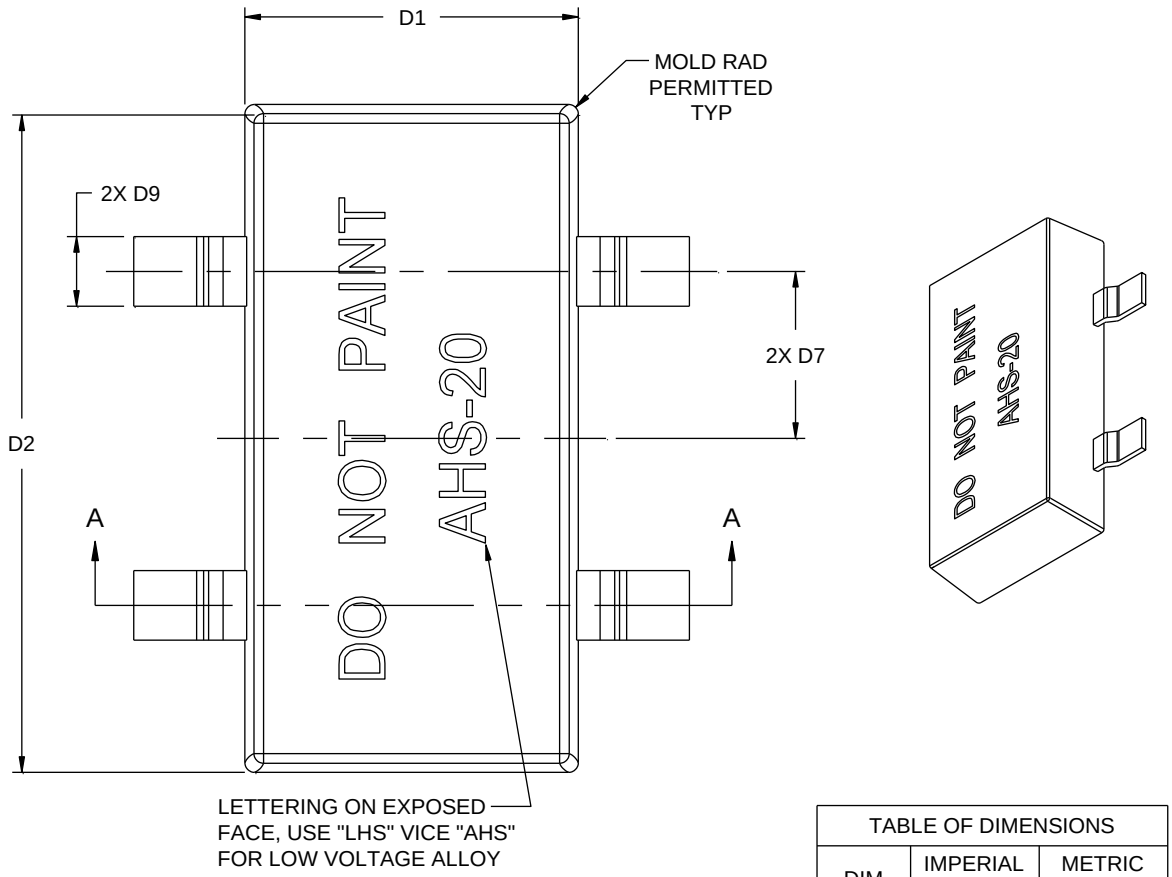

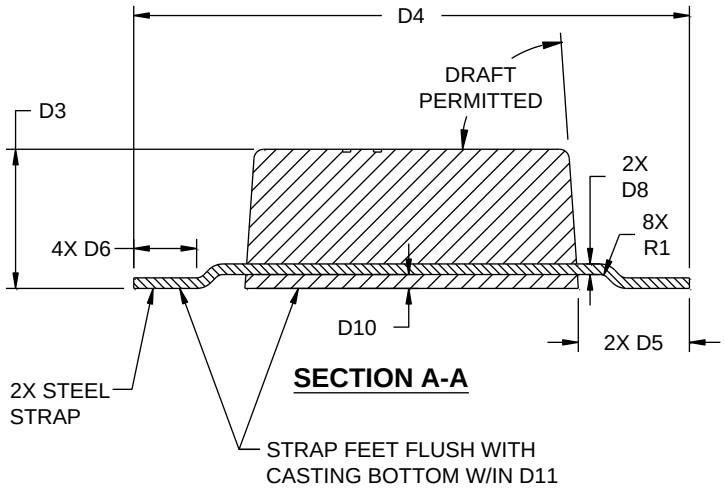

TABLE OF DIMENSIONS		
DIM	IMPERIAL (INCH)	METRIC (MM)
D1	6.00±.13	152.4±3.3
D2	12.00±.13	304.8±3.3
D3	2.50±.13	63.5±3.3
D4	10.00±.13	254±3.3
D5	2.00±.13	50.8±3.3
D6	1.13±.13	28.7±3.3
D7	3.00±.06	76.2±1.6
D8	.19±.02	4.8±.5
D9	1.25±.13	31.7±3.3
D10	.25 +.13/-.06	6.4 +3.3/-1.5
D11	±.06	±1.5
R1	.18 MIN	4.6 MIN

SKETCH A2: HULL SLAB (STEEL STRAPS), 2.50" THICK, TYPE AHS-20 OR LHS-20

MINIMUM WEIGHT = 17.2 LB / 7.8 KG

FIGURE A-2. Aluminum, hull slab (steel straps), type AHS-20/LHS-20.

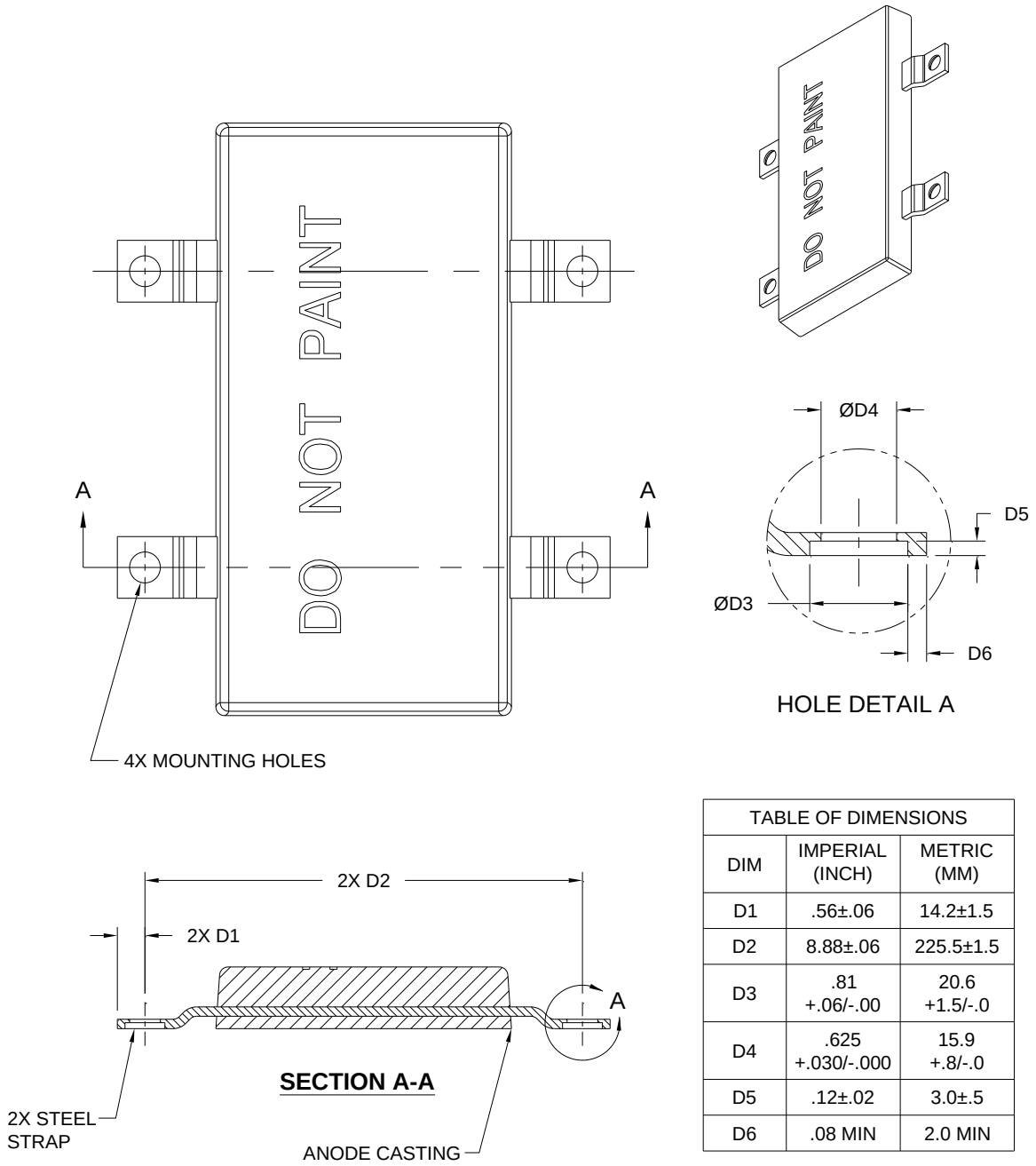

TABLE OF DIMENSIONS		
DIM	IMPERIAL (INCH)	METRIC (MM)
D1	.56±.06	14.2±1.5
D2	8.88±.06	225.5±1.5
D3	.81 +.06/-.00	20.6 +1.5/-.0
D4	.625 +.030/-.000	15.9 +.8/-.0
D5	.12±.02	3.0±.5
D6	.08 MIN	2.0 MIN

SKETCH A3: HULL SLAB (STEEL STRAPS), OPTIONAL MOUNTING HOLES WITH 90° COUNTERBORES

1. SEE SKETCH A1, A2, OR A4 FOR OTHER ANODE DIMENSIONS.
2. MOUNTING HOLES AND COUNTERBORES SHALL ONLY BE PROVIDED WHEN SPECIFIED.

FIGURE A-3. Aluminum, hull slab (steel straps), type AHS/LHS with 90-degree counterbores.

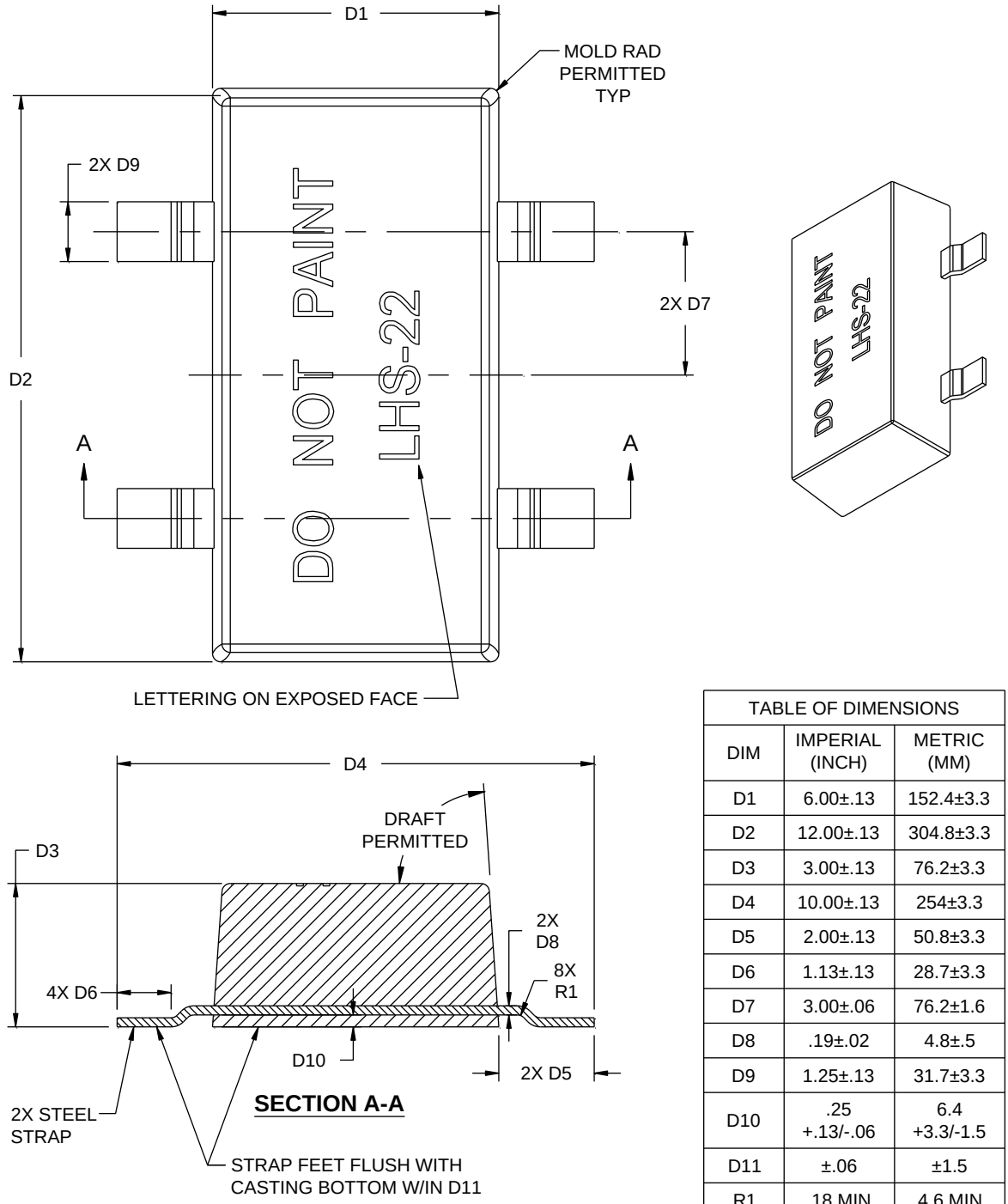

TABLE OF DIMENSIONS		
DIM	IMPERIAL (INCH)	METRIC (MM)
D1	6.00±.13	152.4±3.3
D2	12.00±.13	304.8±3.3
D3	3.00±.13	76.2±3.3
D4	10.00±.13	254±3.3
D5	2.00±.13	50.8±3.3
D6	1.13±.13	28.7±3.3
D7	3.00±.06	76.2±1.6
D8	.19±.02	4.8±.5
D9	1.25±.13	31.7±3.3
D10	.25 +.13/-.06	6.4 +3.3/-1.5
D11	±.06	±1.5
R1	.18 MIN	4.6 MIN

SKETCH A4: HULL SLAB (STEEL STRAPS), 3.00" THICK, TYPE LHS-22

MINIMUM WEIGHT = 22.2 LB / 10.1 KG

1. MATERIAL SHALL BE LOW VOLTAGE ALLOY ONLY.

FIGURE A-4. Aluminum, hull slab (steel straps), type LHS-22.

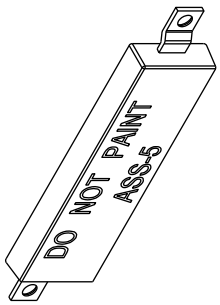

TABLE OF DIMENSIONS		
DIM	IMPERIAL (INCH)	METRIC (MM)
D1	3.00±.13	76.2±3.3
D2	12.00±.13	304.8±3.3
D3	1.25±.13	31.7±3.3
D4	16.00±.13	406.4±3.3
D5	2.00±.13	50.8±3.3
D6	1.13±.13	28.7±3.3
D7	.19±.02	4.8±.5
D8	1.25±.13	31.7±3.3
D9	.25 +.13/-.06	6.4 +3.3/-1.5
D10	.56±.06	14.2±1.5
D11	14.88±.06	378±1.5
D12	±.06	±1.5
D13	.81 +.06/-.00	20.6 +1.5/-.0
D14	.625 +.030/-.000	15.9 +.8/-.0
D15	.12±.02	3.0±.5
D16	.08 MIN	2.0 MIN
R1	.18 MIN	4.6 MIN

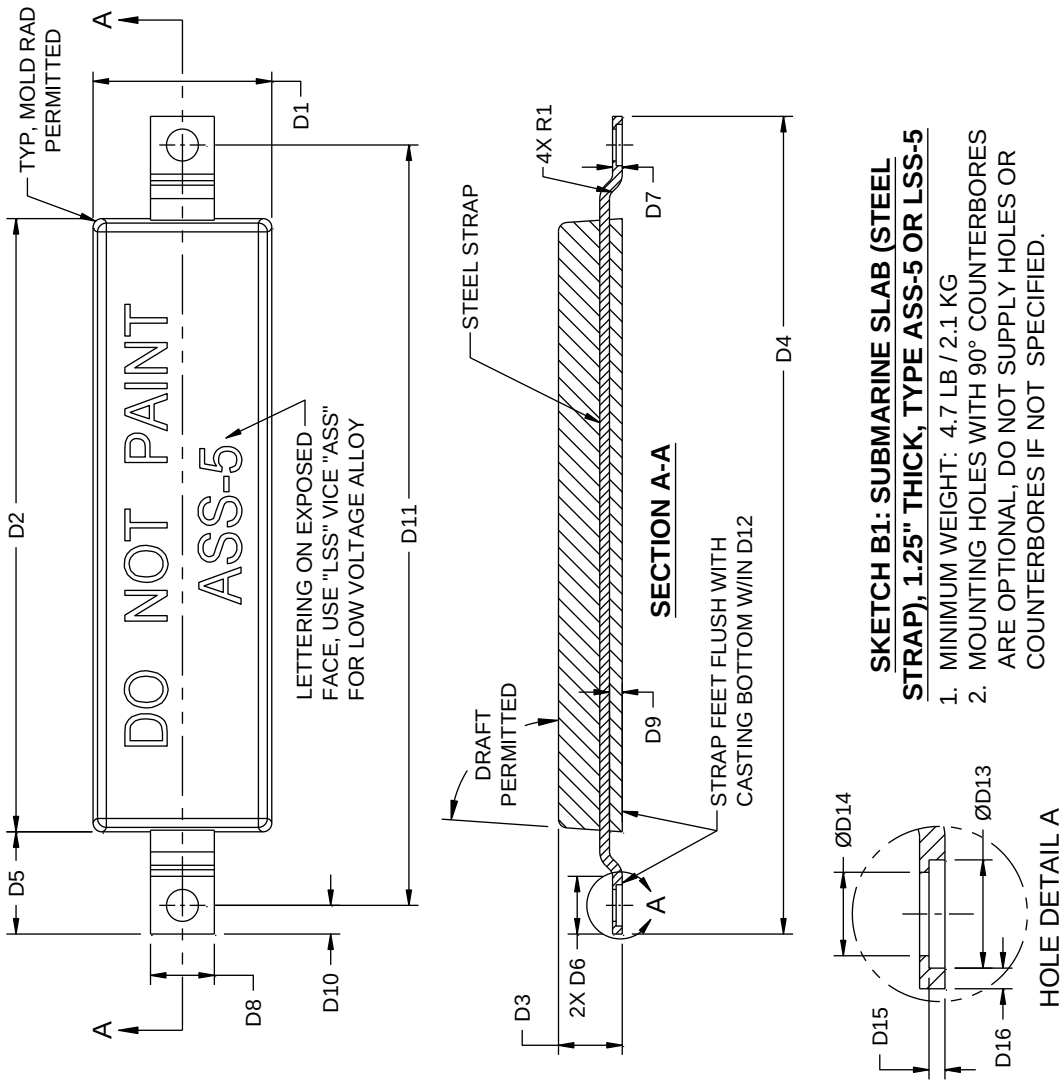

SKETCH B1: SUBMARINE SLAB (STEEL STRAP), 1.25" THICK, TYPE ASS-5 OR LSS-5

1. MINIMUM WEIGHT: 4.7 LB / 2.1 KG
2. MOUNTING HOLES WITH 90° COUNTERBORES ARE OPTIONAL, DO NOT SUPPLY HOLES OR COUNTERBORES IF NOT SPECIFIED.

FIGURE A-5. Aluminum, submarine slab (steel strap), type ASS-5/LSS-5.

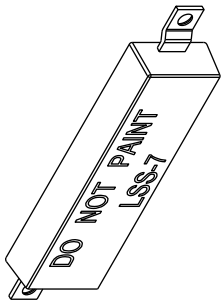

TABLE OF DIMENSIONS		
DIM	IMPERIAL (INCH)	METRIC (MM)
D1	3.00±.13	76.2±3.3
D2	12.00±.13	304.8±3.3
D3	1.75±.13	44.4±3.3
D4	16.00±.13	406.4±3.3
D5	2.00±.13	50.8±3.3
D6	1.13±.13	28.7±3.3
D7	.19±.02	4.8±.5
D8	1.25±.13	31.7±3.3
D9	.25 +.13/-.06	6.4 +3.3/-1.5
D10	.56±.06	14.2±1.5
D11	14.88±.06	378±1.5
D12	±.06	±1.5
D13	.81 +.06/-.00	20.6 +1.5/-.0
D14	.625 +.030/-.000	15.9 +.8/-.0
D15	.12±.02	3.0±.5
D16	.08 MIN	2.0 MIN
R1	.18 MIN	4.6 MIN

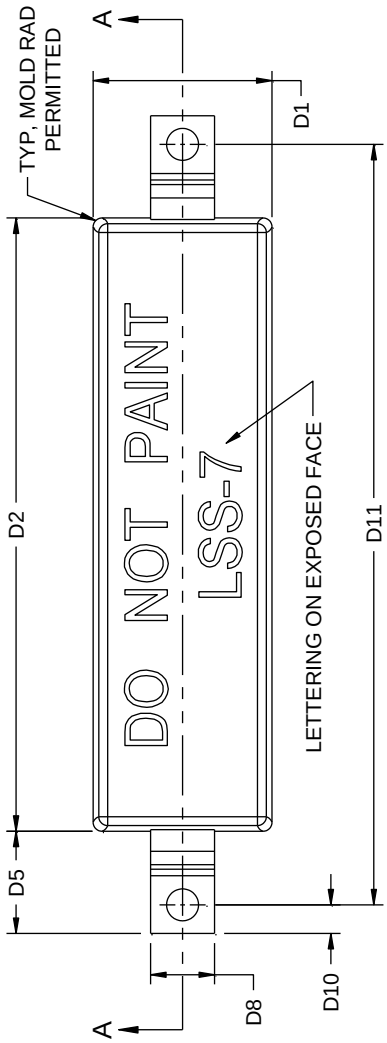

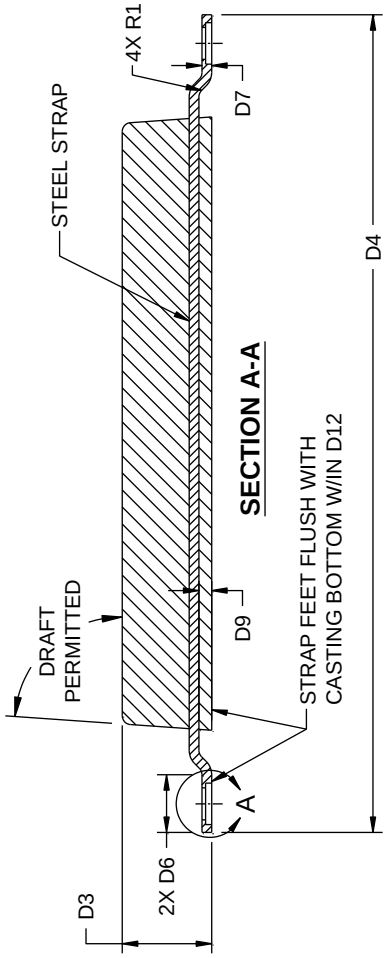

SKETCH B2: SUBMARINE SLAB (STEEL STRAP), 1.75" THICK, TYPE LSS-7

1. MINIMUM WEIGHT: 6.2 LB / 2.8 KG
2. MOUNTING HOLES WITH 90° C'BORE ARE OPTIONAL, DO NOT SUPPLY HOLES IF NOT SPECIFIED
3. MATERIAL TO BE LOW VOLTAGE ALLOY ONLY

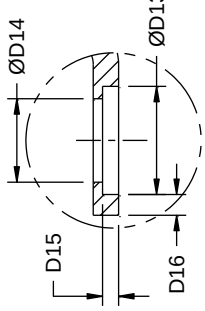

HOLE DETAIL A

This low voltage anode shall be used in applications where equivalent ampere-hour of corresponding zinc anode (ZSS-12) is required.

FIGURE A-6. Aluminum, submarine slab (steel straps), type LSS-7.

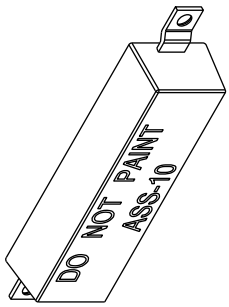

TABLE OF DIMENSIONS		
DIM	IMPERIAL (INCH)	METRIC (MM)
D1	3.00±.13	76.2±3.8
D2	12.00±.13	304.8±3.3
D3	2.50±.13	63.5±3.3
D4	16.00±.13	406.4±3.3
D5	2.00±.13	50.8±3.3
D6	1.13±.13	28.7±3.3
D7	.19±.02	4.8±.5
D8	1.25±.13	31.7±3.3
D9	.25 +.13/-.06	6.4 +3.3/-1.5
D10	.56±.06	14.2±1.5
D11	14.88±.06	378±1.5
D12	±.06	±1.5
D13	.81 +.06/-.00	20.6 +1.5/-.0
D14	.625 +.030/-.000	15.9 +.8/-.0
D15	.12±.02	3.0±.5
D16	.08 MIN	2.0 MIN
R1	.18 MIN	4.6 MIN

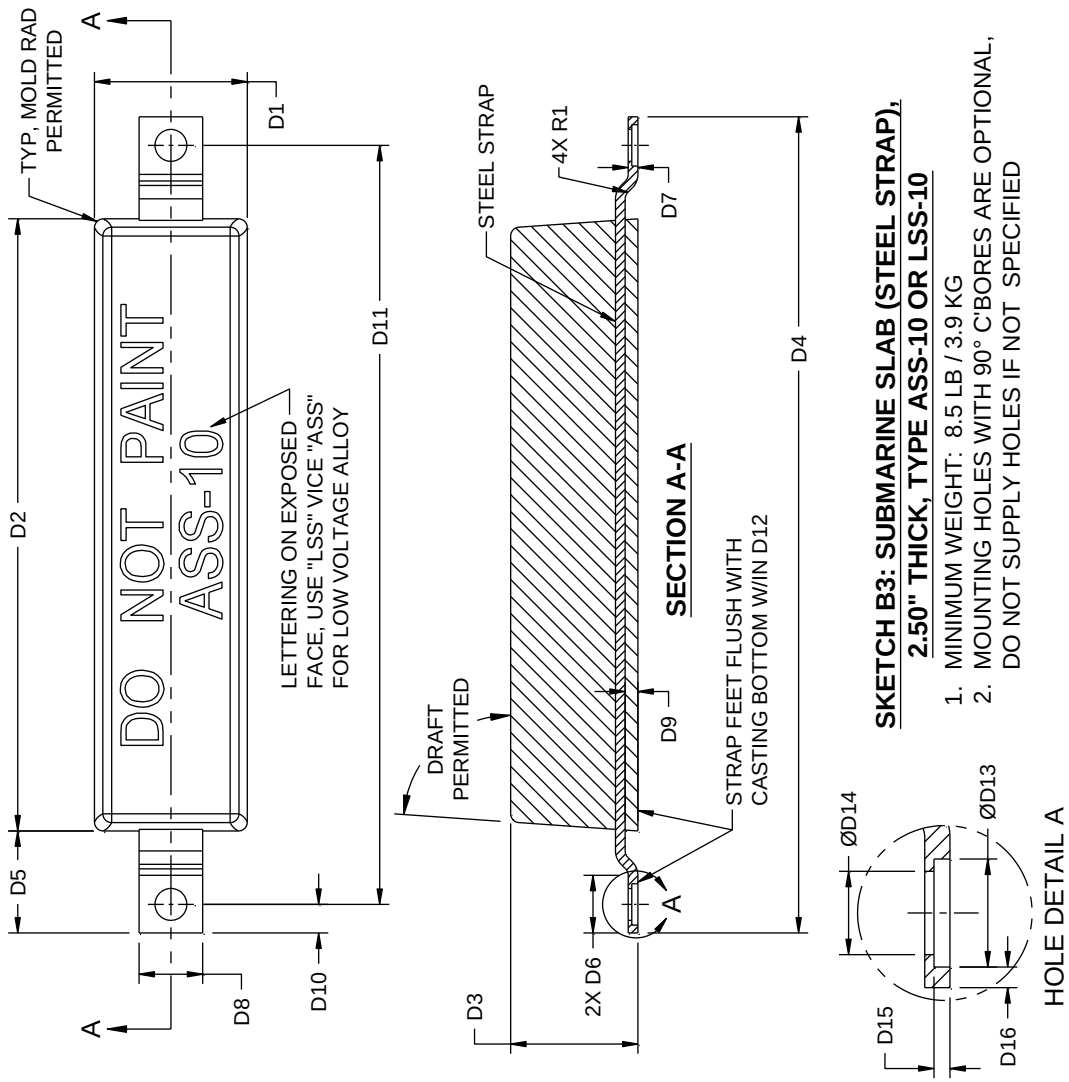

FIGURE A-7. Aluminum, submarine slab (steel strap), type ASS-10/LSS-10.

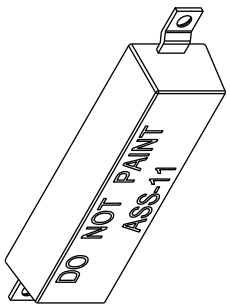

TABLE OF DIMENSIONS		
DIM	IMPERIAL (INCH)	METRIC (MM)
D1	3.50±.13	88.9±3.8
D2	12.00±.13	304.8±3.3
D3	2.50±.13	63.5±3.3
D4	16.00±.13	406.4±3.3
D5	2.00±.13	50.8±3.3
D6	1.13±.13	28.7±3.3
D7	.19±.02	4.8±.5
D8	1.25±.13	31.7±3.3
D9	.25 +.13/-.06	6.4 +3.3/-1.5
D10	.56±.06	14.2±1.5
D11	14.88±.06	378±1.5
D12	±.06	±1.5
D13	.81 +.06/-.00	20.6 +1.5/-.0
D14	.625 +.030/-.000	15.9 +.8/-.0
D15	.12±.02	3.0±.5
D16	.08 MIN	2.0 MIN
R1	.18 MIN	4.6 MIN

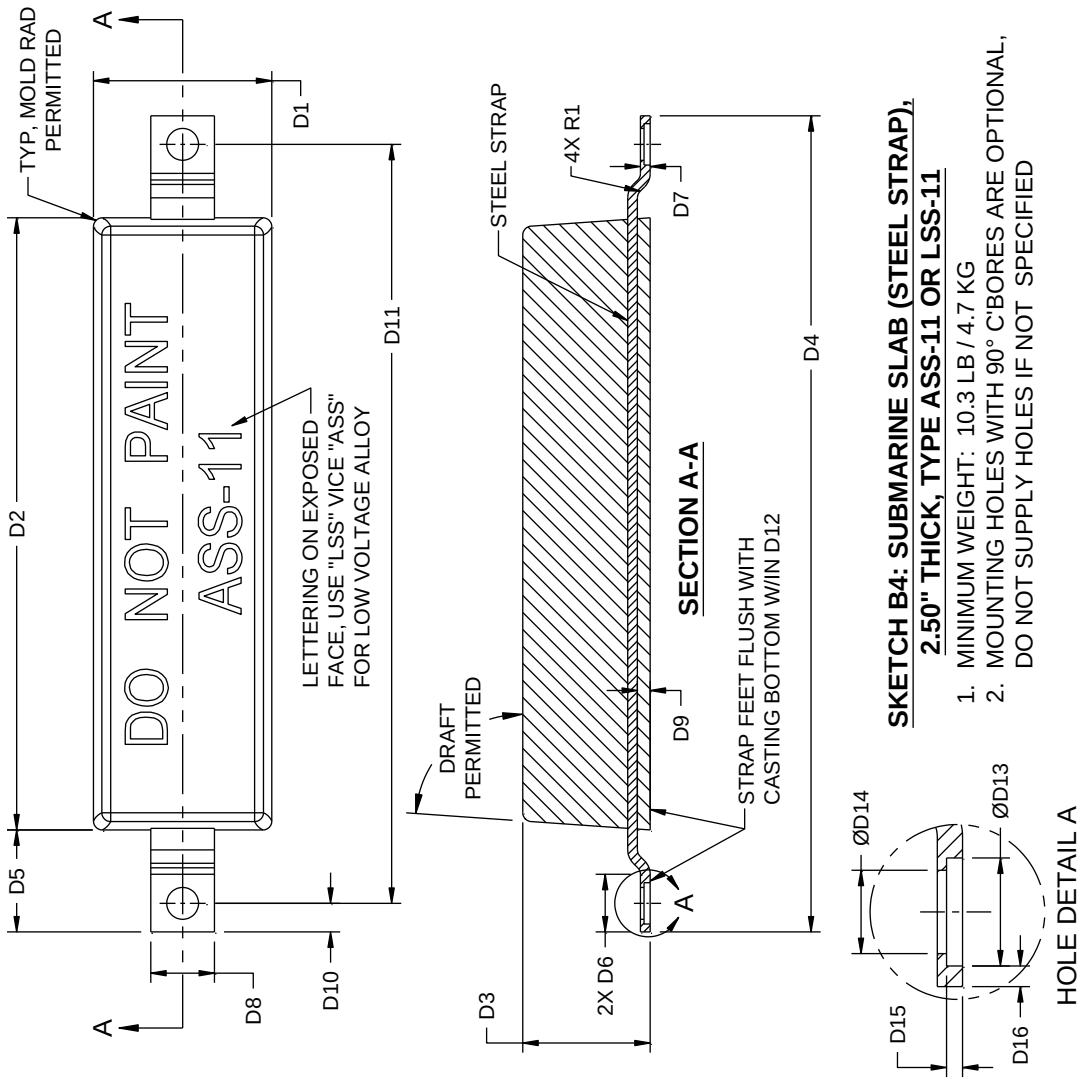

SKETCH B4: SUBMARINE SLAB (STEEL STRAP), 2.50" THICK, TYPE ASS-11 OR LSS-11

1. MINIMUM WEIGHT: 10.3 LB / 4.7 KG
2. MOUNTING HOLES WITH 90° C'BORES ARE OPTIONAL, DO NOT SUPPLY HOLES IF NOT SPECIFIED

FIGURE A-8. Aluminum, submarine slab (steel strap), type ASS-11/LSS-11.

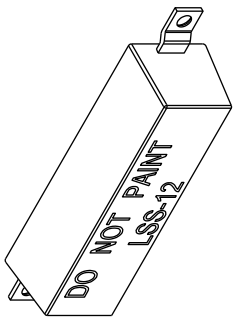

TABLE OF DIMENSIONS		
DIM	IMPERIAL (INCH)	METRIC (MM)
D1	3.00±.13	76±3.8
D2	12.00±.13	304.8±3.3
D3	3.25±.13	82.6±3.3
D4	16.00±.13	406.4±3.3
D5	2.00±.13	50.8±3.3
D6	1.13±.13	28.7±3.3
D7	.19±.02	4.8±.5
D8	1.25±.13	31.7±3.3
D9	.25 +.13/-.06	6.4 +3.3/-1.5
D10	.56±.06	14.2±1.5
D11	14.88±.06	378±1.5
D12	±.06	±1.5
D13	.81 +.06/-.00	20.6 +1.5/-.0
D14	.625 +.030/-.000	15.9 +.8/-.0
D15	.12±.02	3.0±.5
D16	.08 MIN	2.0 MIN
R1	.18 MIN	4.6 MIN

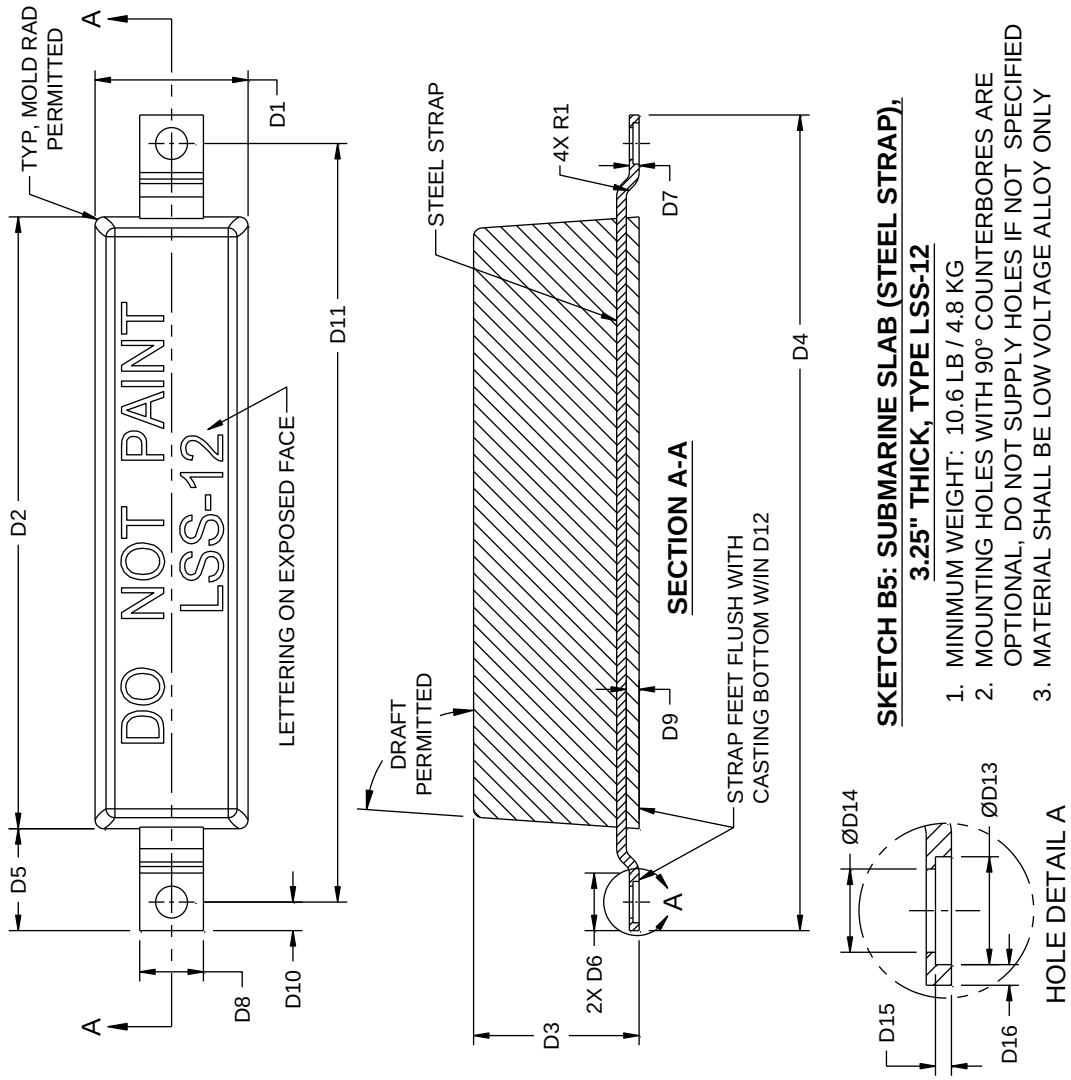

SKETCH B5: SUBMARINE SLAB (STEEL STRAP), 3.25" THICK, TYPE LSS-12

1. MINIMUM WEIGHT: 10.6 LB / 4.8 KG
2. MOUNTING HOLES WITH 90° COUNTERBORES ARE OPTIONAL, DO NOT SUPPLY HOLES IF NOT SPECIFIED
3. MATERIAL SHALL BE LOW VOLTAGE ALLOY ONLY

FIGURE A-9. Aluminum, submarine (steel strap), type LSS-12.

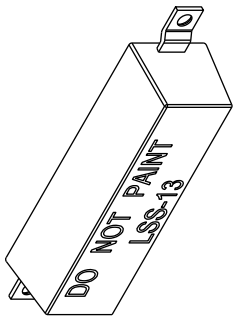

TABLE OF DIMENSIONS		
DIM	IMPERIAL (INCH)	METRIC (MM)
D1	3.50±.13	88.9±3.8
D2	12.00±.13	304.8±3.3
D3	3.25±.13	82.6±3.3
D4	16.00±.13	406.4±3.3
D5	2.00±.13	50.8±3.3
D6	1.13±.13	28.7±3.3
D7	.19±.02	4.8±.5
D8	1.25±.13	31.7±3.3
D9	.25 +.13/-.06	6.4 +3.3/-1.5
D10	.56±.06	14.2±1.5
D11	14.88±.06	378±1.5
D12	±.06	±1.5
D13	.81 +.06/-.00	20.6 +1.5/-.0
D14	.625 +.030/-.000	15.9 +.8/-.0
D15	.12±.02	3.0±.5
D16	.08 MIN	2.0 MIN
R1	.18 MIN	4.6 MIN

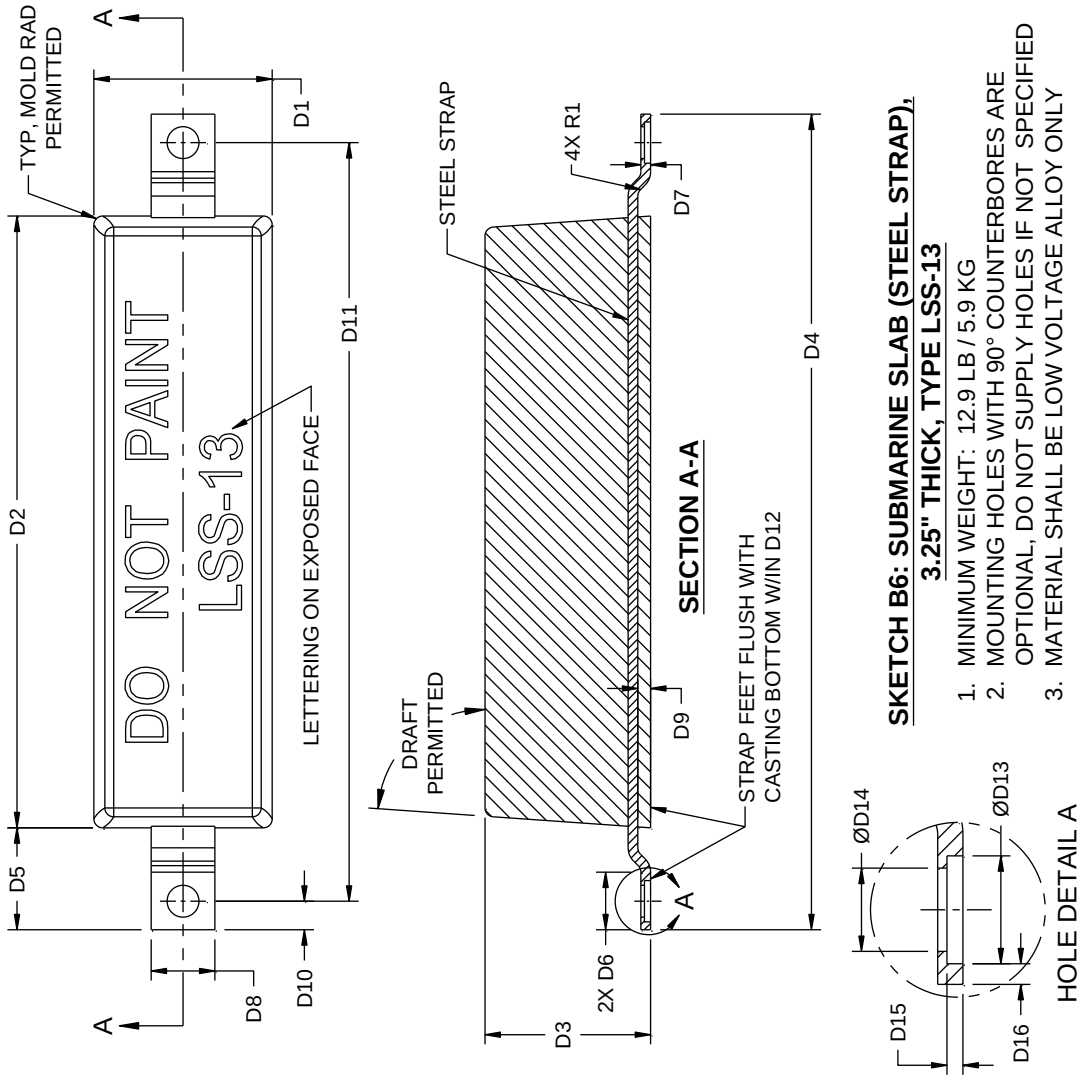

This low voltage anode shall be used in applications where equivalent ampere-hour of corresponding zinc anode (ZSS-24) is required.

FIGURE A-10. Aluminum submarine (steel strap), type LSS-13.

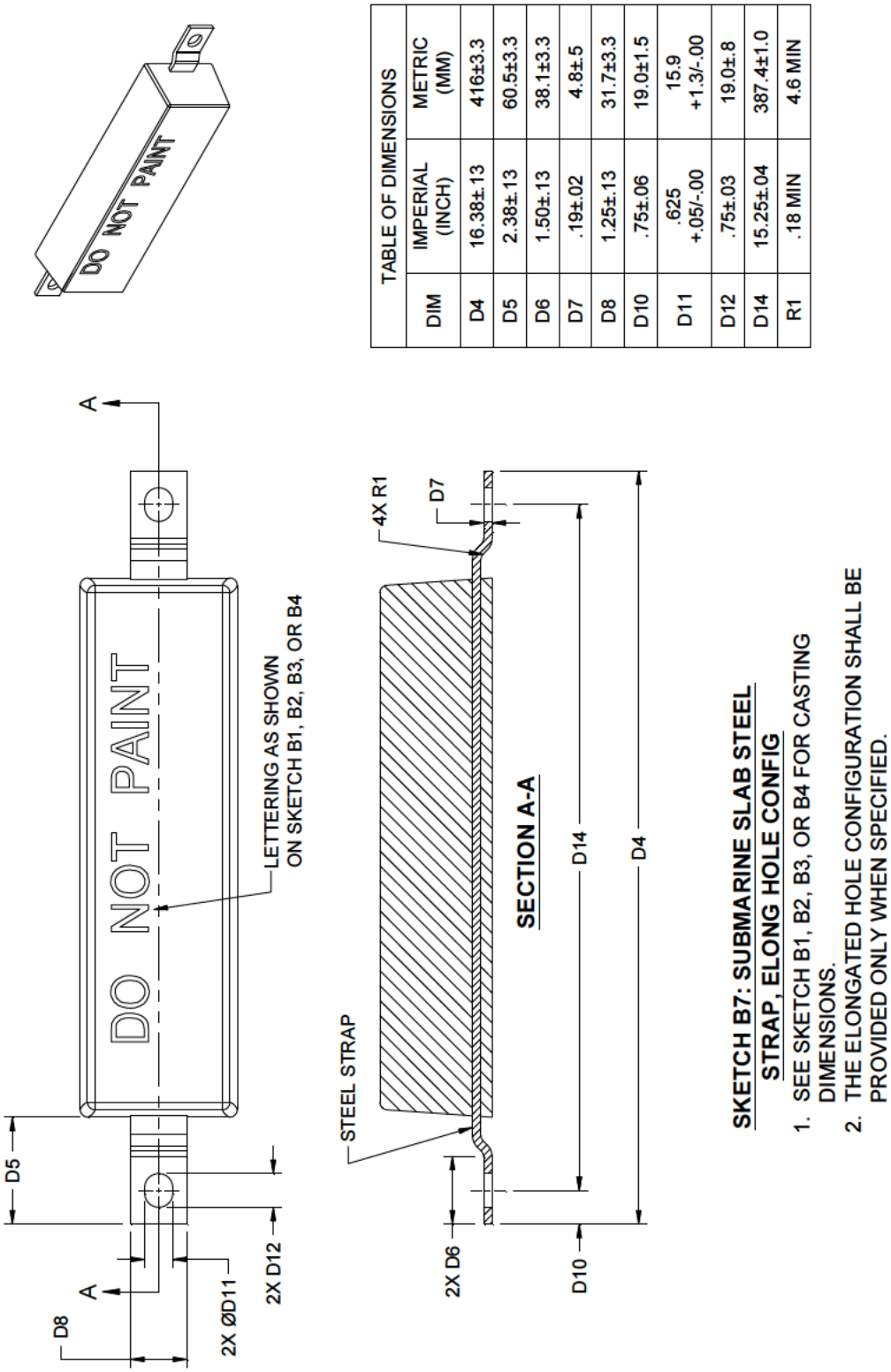

TABLE OF DIMENSIONS		
DIM	IMPERIAL (INCH)	METRIC (MM)
D4	16.38±.13	416±3.3
D5	2.38±.13	60.5±3.3
D6	1.50±.13	38.1±3.3
D7	.19±.02	4.8±.5
D8	1.25±.13	31.7±3.3
D10	.75±.06	19.0±1.5
D11	.625 +.05/-.00	15.9 +1.3/-.00
D12	.75±.03	19.0±.8
D14	15.25±.04	387.4±1.0
R1	.18 MIN	4.6 MIN

FIGURE A-11. Aluminum, submarine slab (steel strap) type ASS/LSS with elongated stud hole.

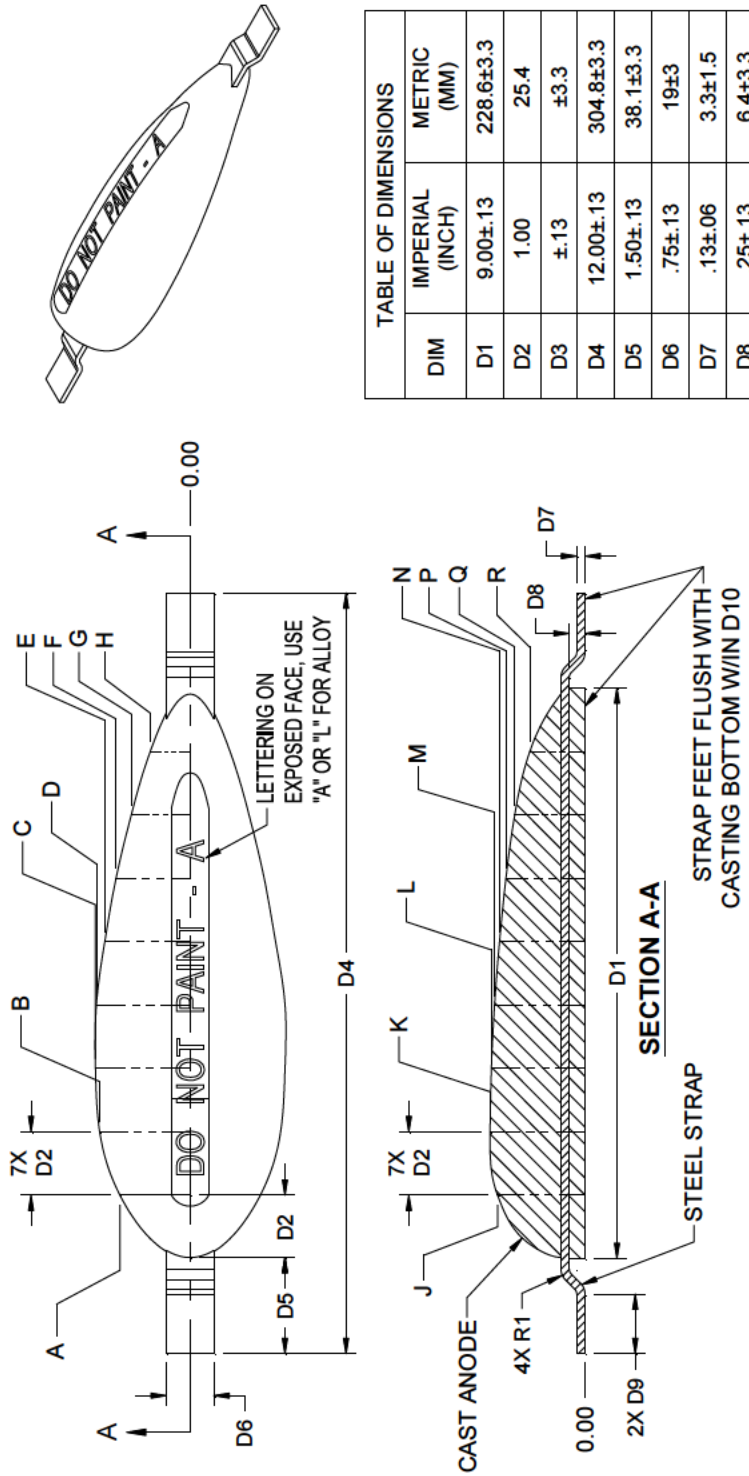

CONTOUR DEFINITION POINTS (SEE NOTE 2)

	A	B	C	D	E	F	G	H	J	K	L	M	N	P	Q	R
IMPERIAL (IN)	1.11	1.43	1.50	1.46	1.35	1.17	.93	.63	1.38	1.50	1.48	1.43	1.35	1.25	1.11	.87
METRIC (MM)	28.2	36.3	38.1	37.1	34.3	29.7	23.6	16.0	35.1	38.1	37.6	36.3	34.3	31.7	28.2	22.1

TABLE OF DIMENSIONS

DIM	IMPERIAL (INCH)	METRIC (MM)
D1	9.00±.13	228.6±3.3
D2	1.00	25.4
D3	±.13	±3.3
D4	12.00±.13	304.8±3.3
D5	1.50±.13	38.1±3.3
D6	.75±.13	19±3
D7	.13±.06	3.3±1.5
D8	.25±.13	6.4±3.3
D9	.94±.13	23.9±3.3
D10	±.13	±3.3
R1	.11 MIN	2.8 MIN

SKETCH C: TEARDROP SHAPE (STEEL STRAP), TYPE ATS OR LTS

1. MINIMUM WEIGHT: 2.0 LB / 0.9 KG
2. CONTOUR TOLERANCE IS ±D3 MEASURED NORMAL TO SURFACE. CONTOUR SHALL BE HYDRODYNAMICALLY FAIR.

FIGURE A-12. Aluminum, teardrop (steel strap) type ATS/LTS.

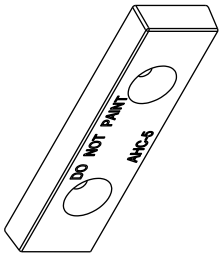

TABLE OF DIMENSIONS		
DIM	IMPERIAL (INCH)	METRIC (MM)
D1	3.00±.13	76±3.3
D2	12.00±.13	304.8±3.3
D3	1.25±.13	31.8±3.3
D4	8.00±.13	203.2±3.3
D5	1.50±.13	38.1±3.3
D6	2.00±.13	50.8±3.3
D7	1.00±.06	25.4±1.5
D8	.63±.13	16.0±3.3
D9	.25±.13	6.4±3.3
D10	.25 +.13/-.06	6.4 +3.3/-1.5
D11	1.00±.06	25.4±1.5
D12	2.00±.06	50.8±1.5
D13	6.00±.06	152.4±1.5
D14	1.56±.06	39.6±1.5

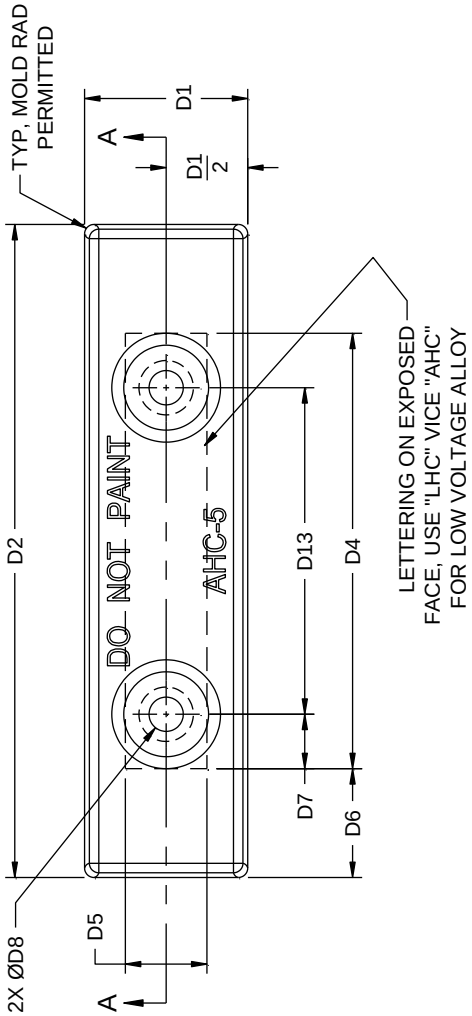

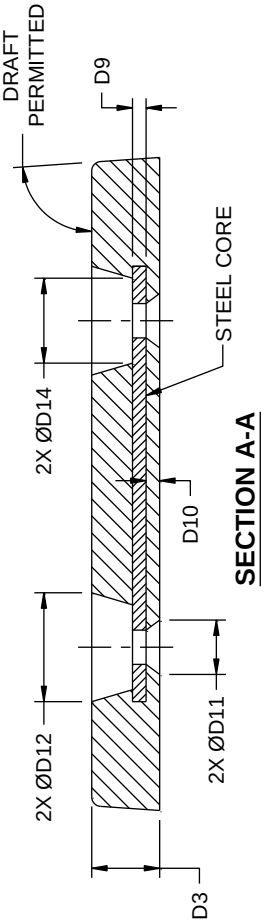

SECTION A-A

SKETCH D1: HULL SLAB (STEEL CORE), TYPE AHC-5 OR LHC-5, 1.25" THK, 1.00" BTM C'SINK

MINIMUM WEIGHT = 4.1 LB / 1.9 KG

FIGURE A-13. Aluminum, hull slab (steel strap), type AHC-5/LHC-5.

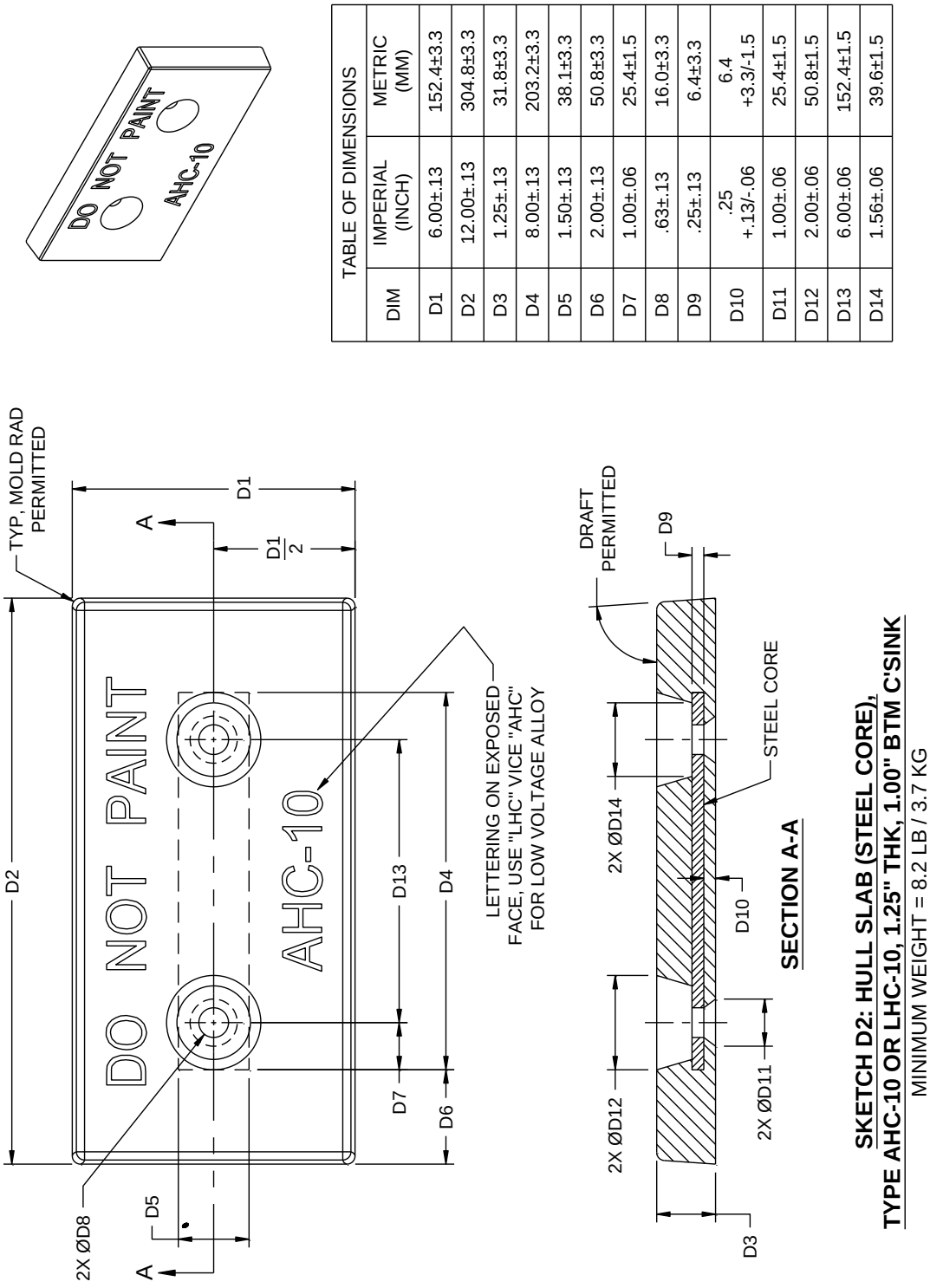

TABLE OF DIMENSIONS		
DIM	IMPERIAL (INCH)	METRIC (MM)
D1	6.00±.13	152.4±3.3
D2	12.00±.13	304.8±3.3
D3	1.25±.13	31.8±3.3
D4	8.00±.13	203.2±3.3
D5	1.50±.13	38.1±3.3
D6	2.00±.13	50.8±3.3
D7	1.00±.06	25.4±1.5
D8	.63±.13	16.0±3.3
D9	.25±.13	6.4±3.3
D10	.25 +.13/-.06	6.4 +3.3/-1.5
D11	1.00±.06	25.4±1.5
D12	2.00±.06	50.8±1.5
D13	6.00±.06	152.4±1.5
D14	1.56±.06	39.6±1.5

FIGURE A-14. Aluminum hull slab (steel strap), type AHC-10/LHC-10.

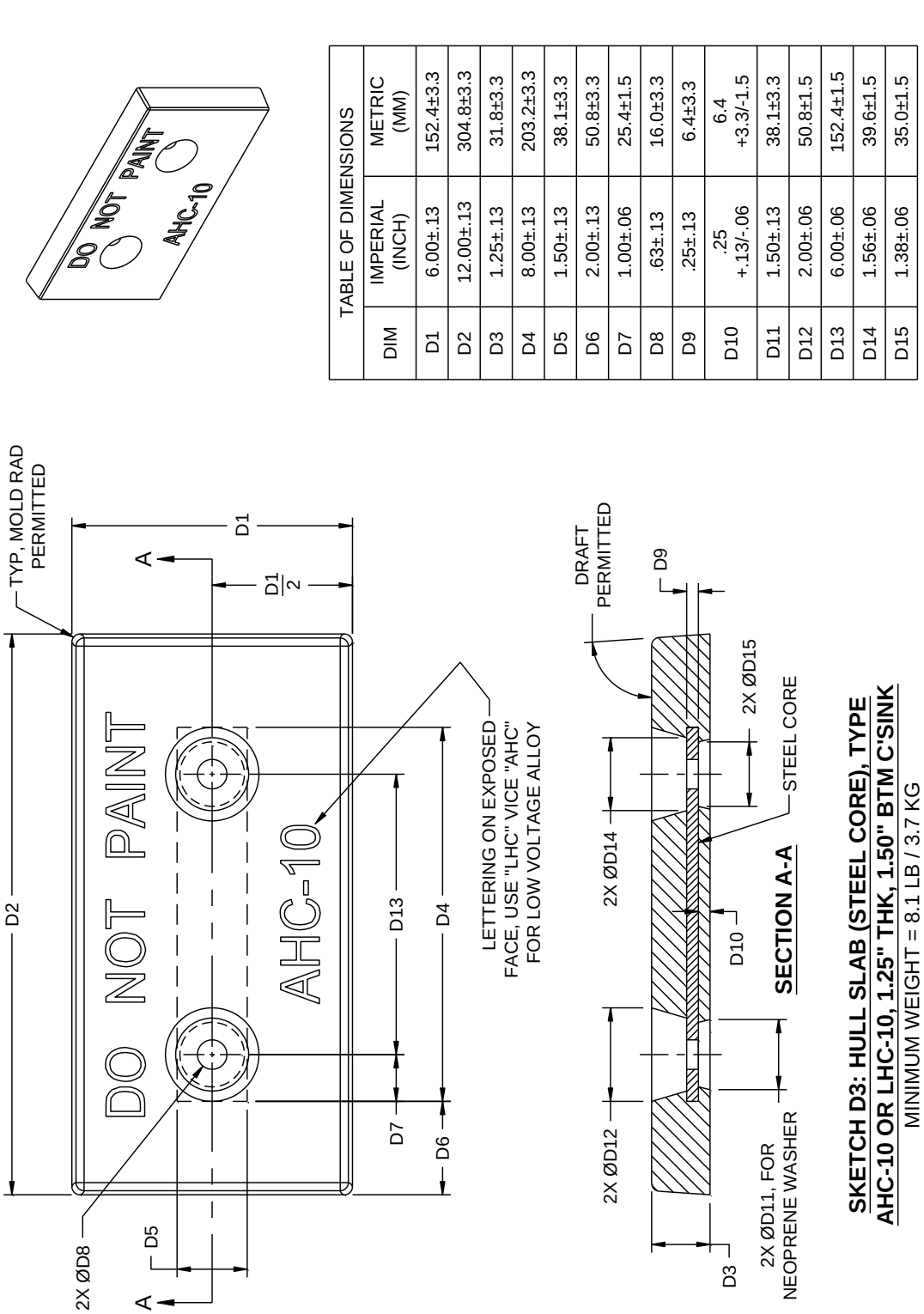

TABLE OF DIMENSIONS		
DIM	IMPERIAL (INCH)	METRIC (MM)
D1	6.00±.13	152.4±3.3
D2	12.00±.13	304.8±3.3
D3	1.25±.13	31.8±3.3
D4	8.00±.13	203.2±3.3
D5	1.50±.13	38.1±3.3
D6	2.00±.13	50.8±3.3
D7	1.00±.06	25.4±1.5
D8	.63±.13	16.0±3.3
D9	.25±.13	6.4±3.3
D10	.25 +.13/-.06	6.4 +3.3/-1.5
D11	1.50±.13	38.1±3.3
D12	2.00±.06	50.8±1.5
D13	6.00±.06	152.4±1.5
D14	1.56±.06	39.6±1.5
D15	1.38±.06	35.0±1.5

FIGURE A-15. Aluminum hull slab (steel core), type AHC-10/LHC-10 with countersink for neoprene washer.

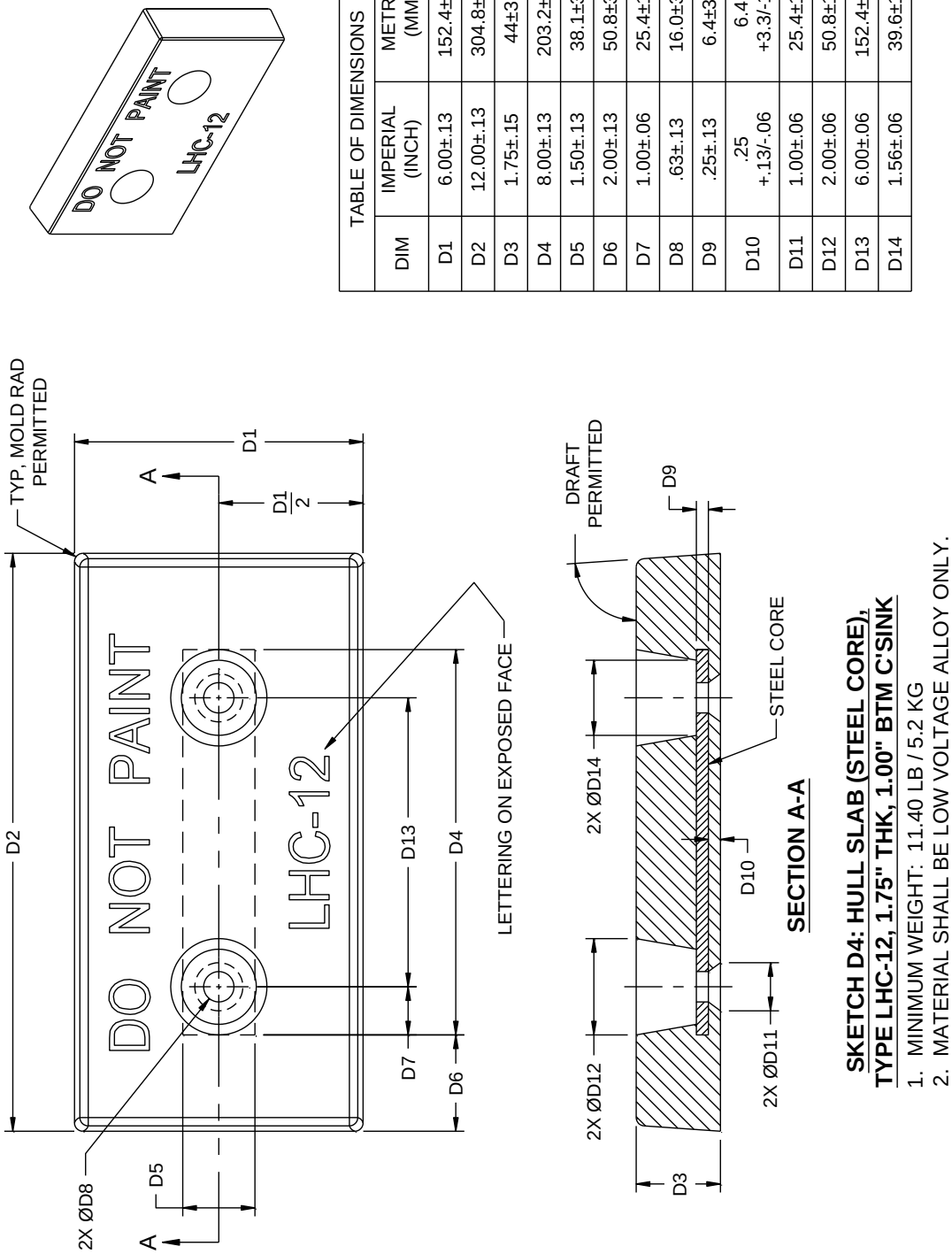

TABLE OF DIMENSIONS		
DIM	IMPERIAL (INCH)	METRIC (MM)
D1	6.00±.13	152.4±3.3
D2	12.00±.13	304.8±3.3
D3	1.75±.15	44±3.8
D4	8.00±.13	203.2±3.3
D5	1.50±.13	38.1±3.3
D6	2.00±.13	50.8±3.3
D7	1.00±.06	25.4±1.5
D8	.63±.13	16.0±3.3
D9	.25±.13	6.4±3.3
D10	.25 +.13/-.06	6.4 +3.3/-1.5
D11	1.00±.06	25.4±1.5
D12	2.00±.06	50.8±1.5
D13	6.00±.06	152.4±1.5
D14	1.56±.06	39.6±1.5

SKETCH D4: HULL SLAB (STEEL CORE), TYPE LHC-12, 1.75" THK, 1.00" BTM C'SINK

1. MINIMUM WEIGHT: 11.40 LB / 5.2 KG
2. MATERIAL SHALL BE LOW VOLTAGE ALLOY ONLY.

This low voltage anode shall be used in applications where equivalent ampere-hour of corresponding zinc anode (ZHC-23) is required.

FIGURE A-16. Aluminum hull slab (steel core), type LHC-12.

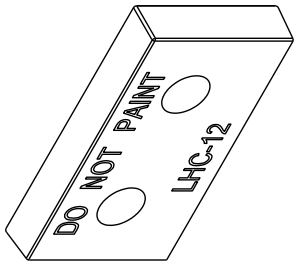

TABLE OF DIMENSIONS		
DIM	IMPERIAL (INCH)	METRIC (MM)
D1	6.00±.13	152.4±3.3
D2	12.00±.13	304.8±3.3
D3	1.75±.15	44±3.8
D4	8.00±.13	203.2±3.3
D5	1.50±.13	38.1±3.3
D6	2.00±.13	50.8±3.3
D7	1.00±.06	25.4±1.5
D8	.63±.13	16.0±3.3
D9	.25±.13	6.4±3.3
D10	.25 +.13/-.06	6.4 +3.3/-1.5
D11	1.50±.13	38.1±3.3
D12	2.00±.06	50.8±1.5
D13	6.00±.06	152.4±1.5
D14	1.56±.06	39.6±1.5
D15	1.38±.06	35.0±1.5

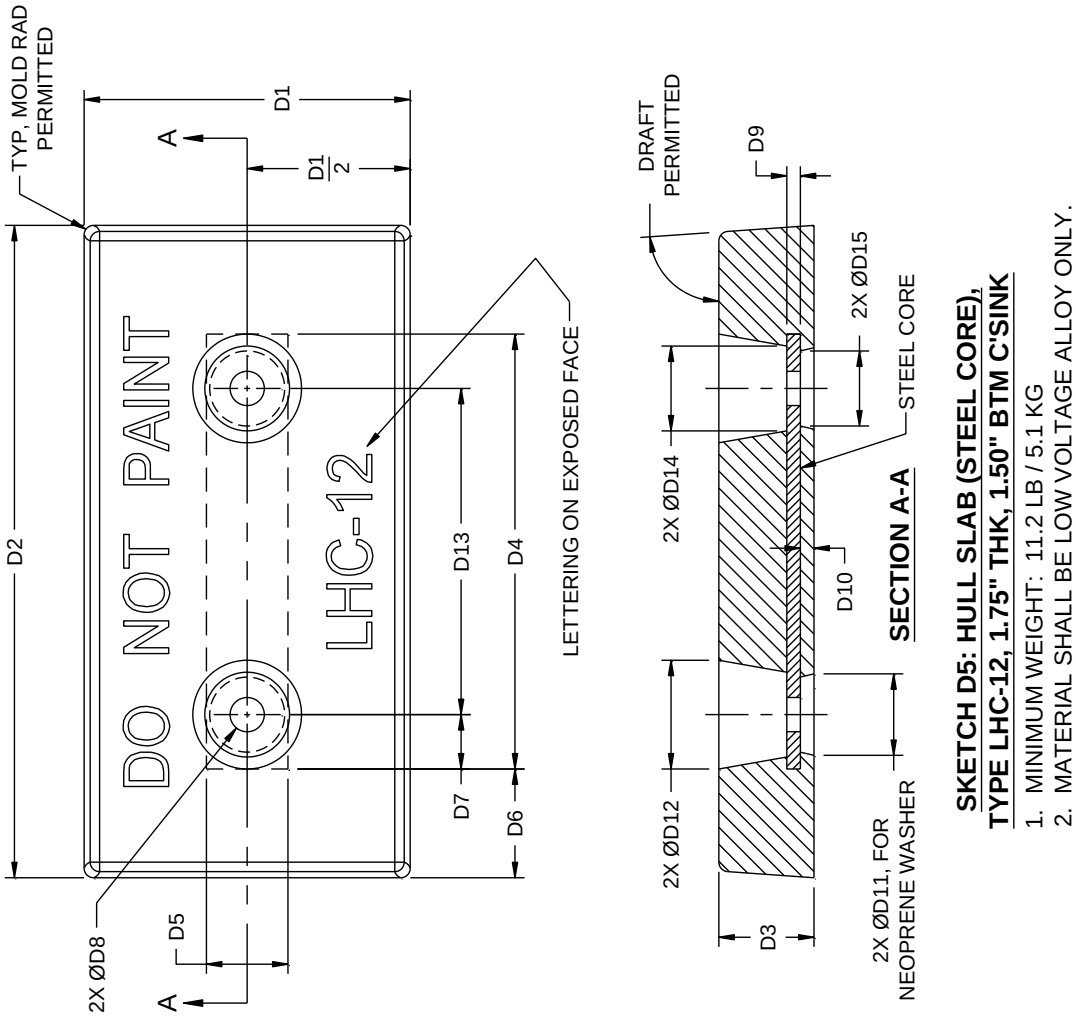

This low voltage anode shall be used in applications where equivalent ampere-hour of corresponding zinc anode (ZHC-23) is required.

FIGURE A-17. Aluminum hull slab (steel core), type LHC-12 with countersink for neoprene washer.

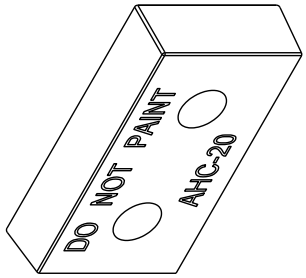

TABLE OF DIMENSIONS		
DIM	IMPERIAL (INCH)	METRIC (MM)
D1	6.00±.13	152.4±3.3
D2	12.00±.13	304.8±3.3
D3	2.50±.15	63.5±3
D4	8.00±.13	203.2±3.3
D5	1.50±.13	38.1±3.3
D6	2.00±.13	50.8±3.3
D7	1.00±.06	25.4±1.5
D8	.63±.13	16.0±3.3
D9	.25±.13	6.4±3.3
D10	.25 +.13/-.06	6.4 +3.3/-1.5
D11	1.00±.06	25.4±1.5
D12	2.00±.06	50.8±1.5
D13	6.00±.06	152.4±1.5
D14	1.56±.06	39.6±1.5

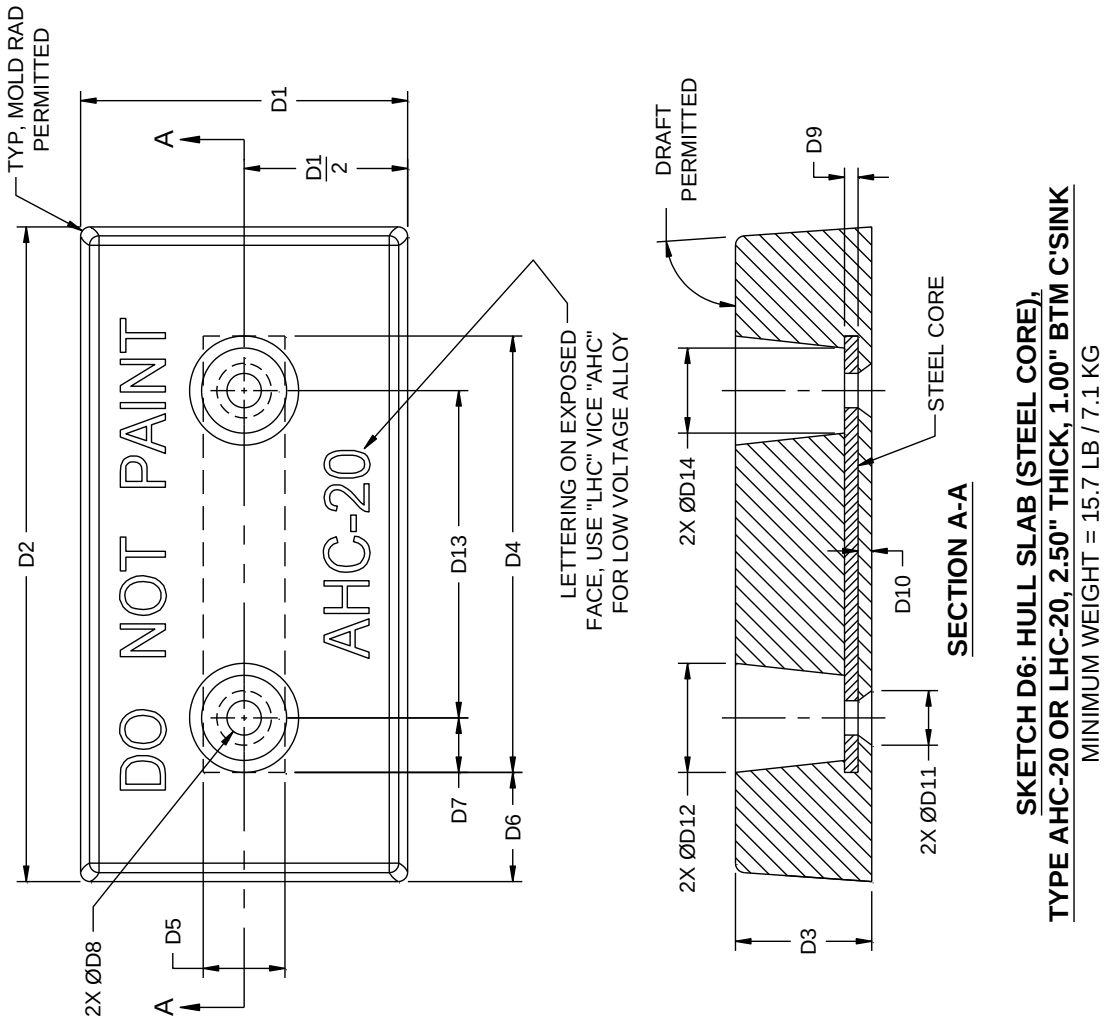

FIGURE A-18. Aluminum hull slab (steel core), type AHC-20/LHC-20.

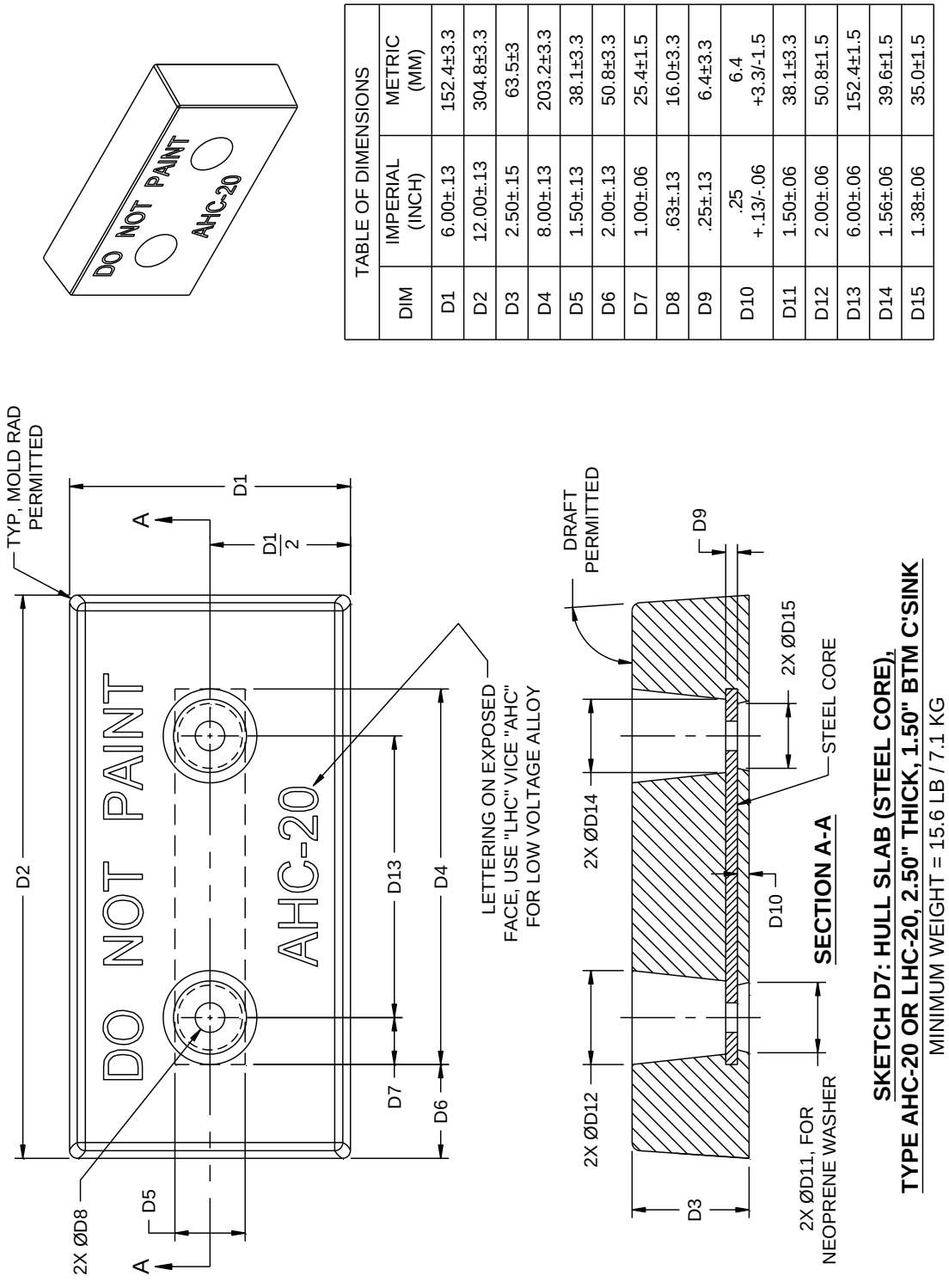

TABLE OF DIMENSIONS		
DIM	IMPERIAL (INCH)	METRIC (MM)
D1	6.00±.13	152.4±3.3
D2	12.00±.13	304.8±3.3
D3	2.50±.15	63.5±3
D4	8.00±.13	203.2±3.3
D5	1.50±.13	38.1±3.3
D6	2.00±.13	50.8±3.3
D7	1.00±.06	25.4±1.5
D8	.63±.13	16.0±3.3
D9	.25±.13	6.4±3.3
D10	.25 +.13/-.06	6.4 +3.3/-1.5
D11	1.50±.06	38.1±3.3
D12	2.00±.06	50.8±1.5
D13	6.00±.06	152.4±1.5
D14	1.56±.06	39.6±1.5
D15	1.38±.06	35.0±1.5

FIGURE A-19. Aluminum hull slab (steel core), type AHC-20/LHC-20 with countersink for neoprene washer.

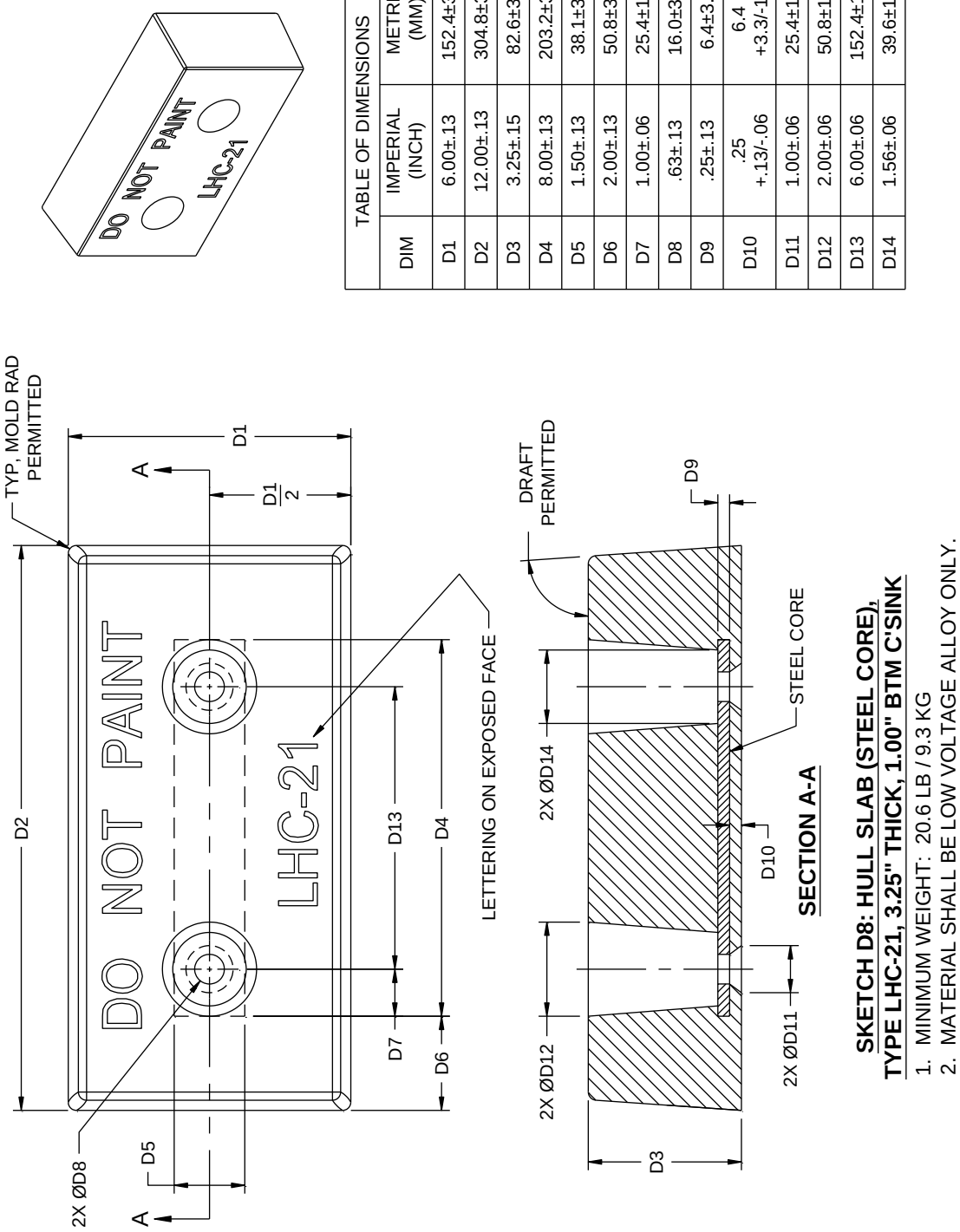

TABLE OF DIMENSIONS		
DIM	IMPERIAL (INCH)	METRIC (MM)
D1	6.00±.13	152.4±3.3
D2	12.00±.13	304.8±3.3
D3	3.25±.15	82.6±3.8
D4	8.00±.13	203.2±3.3
D5	1.50±.13	38.1±3.3
D6	2.00±.13	50.8±3.3
D7	1.00±.06	25.4±1.5
D8	.63±.13	16.0±3.3
D9	.25±.13	6.4±3.3
D10	.25 +.13/-.06	6.4 +3.3/-1.5
D11	1.00±.06	25.4±1.5
D12	2.00±.06	50.8±1.5
D13	6.00±.06	152.4±1.5
D14	1.56±.06	39.6±1.5

This low voltage anode shall be used in applications where equivalent ampere-hour of corresponding zinc anode (ZHC-42) is required.

FIGURE A-20. Aluminum hull slab (steel core), type LHC-21.

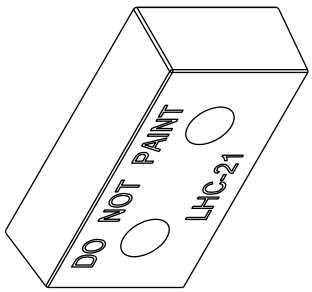

TABLE OF DIMENSIONS		
DIM	IMPERIAL (INCH)	METRIC (MM)
D1	6.00±.13	152.4±3.3
D2	12.00±.13	304.8±3.3
D3	3.25±.15	82.6±3.8
D4	8.00±.13	203.2±3.3
D5	1.50±.13	38.1±3.3
D6	2.00±.13	50.8±3.3
D7	1.00±.06	25.4±1.5
D8	.63±.13	16.0±3.3
D9	.25±.13	6.4±3.3
D10	.25 +.13/-.06	6.4 +3.3/-1.5
D11	1.50±.13	38.1±3.3
D12	2.00±.06	50.8±1.5
D13	6.00±.06	152.4±1.5
D14	1.56±.06	39.6±1.5
D15	1.38±.06	35.0±1.5

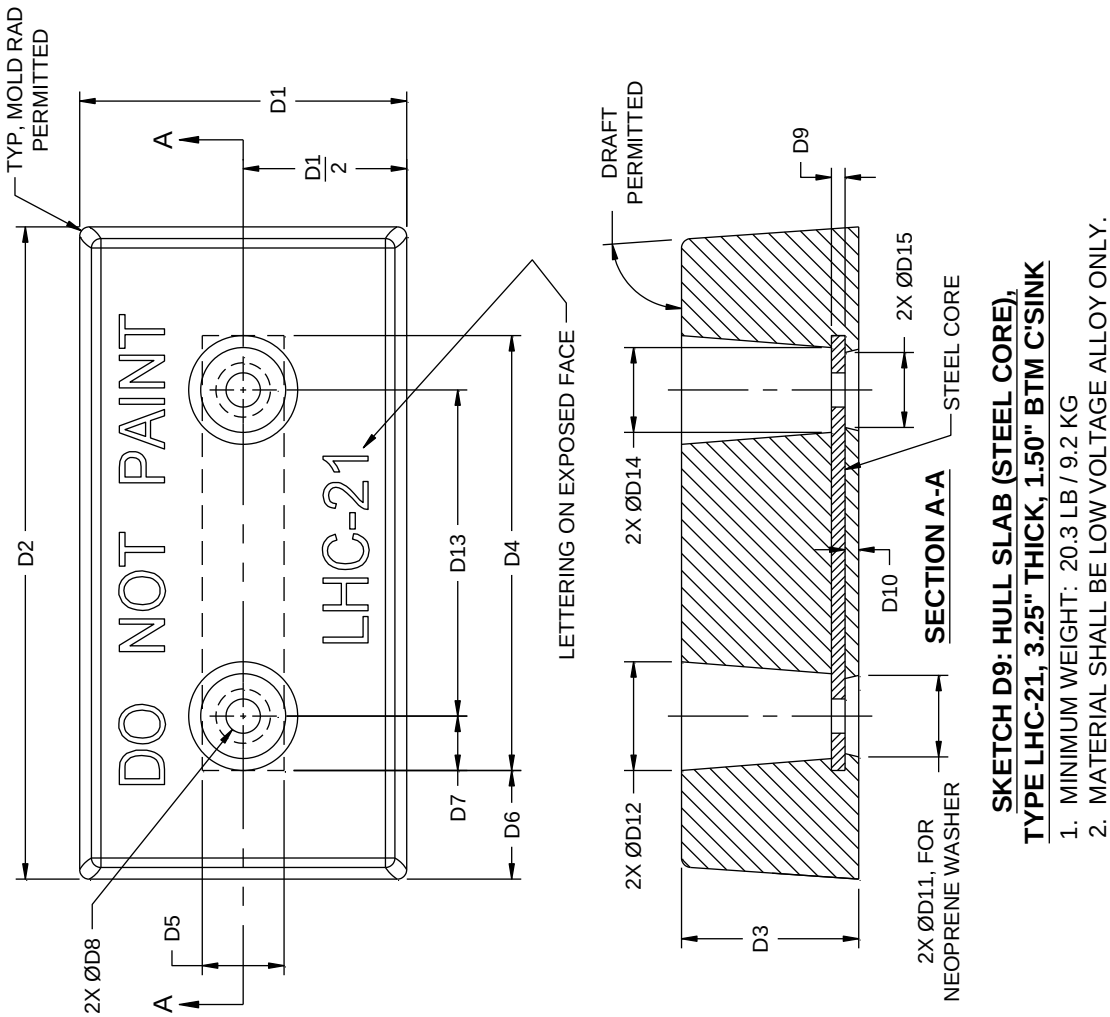

This low voltage anode shall be used in applications where equivalent ampere-hour of corresponding zinc anode (ZHC-42) is required.

FIGURE A-21. Aluminum hull slab (steel core), type LHC-21 with countersink for neoprene washer.

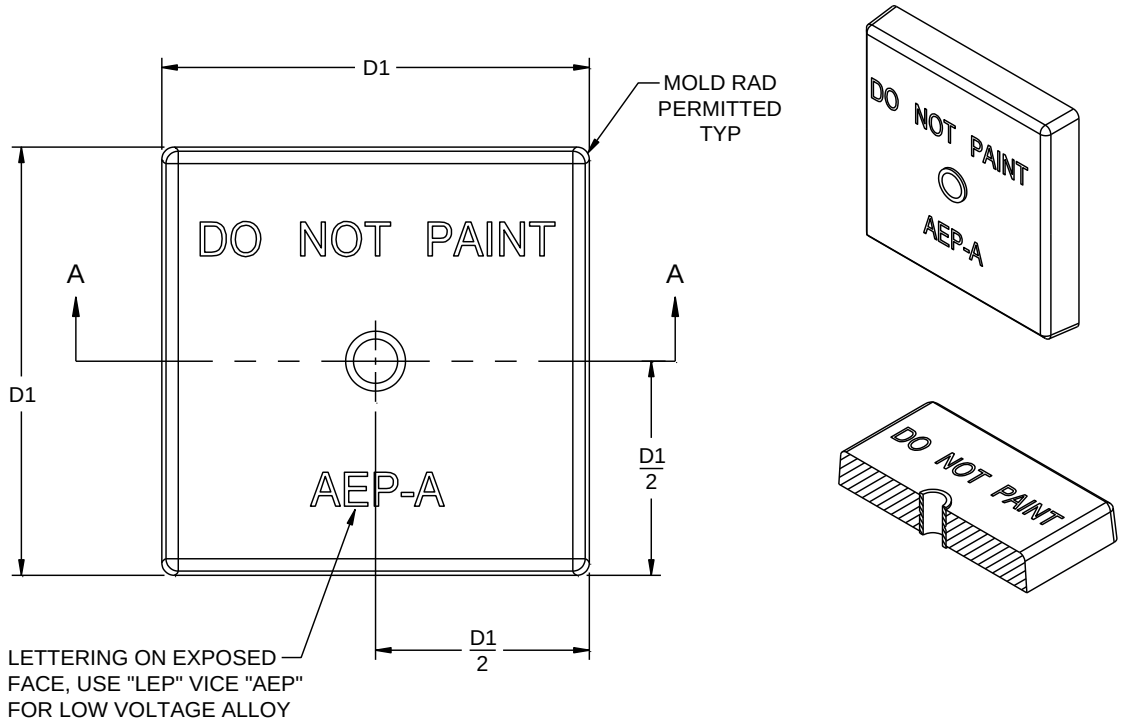

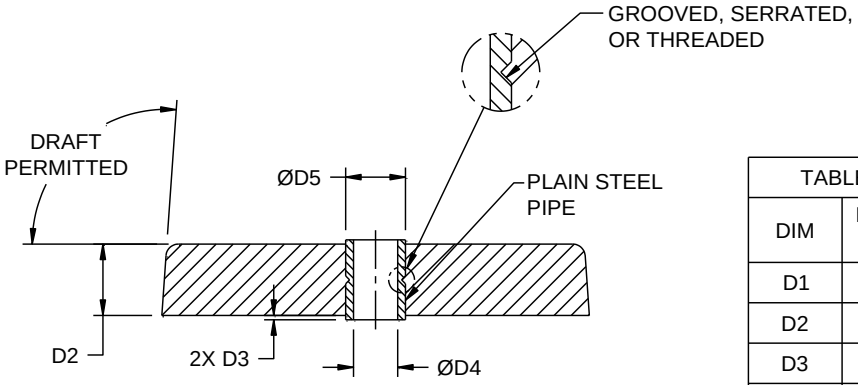

SECTION A-A

TABLE OF DIMENSIONS		
DIM	IMPERIAL (INCH)	METRIC (MM)
D1	6.00±.13	152.4±3.3
D2	1.00±.13	25.4±3.3
D3	.06±.04	1.5±1.0
D4*	.62±.02	15.7±.5
D5*	.84±.02	21.3±.5

* CORRESPONDS TO ASTM A524 1/2" SCHED 40 OR BS EN 10305-1 22MM STEEL PIPE SIZES.

SKETCH E1: FAIRWATER SLAB, STYLE A (PIPE CORE), TYPE AEP OR LEP, 1.00" THICK

MINIMUM WEIGHT = 3.2 LB / 1.5 KG

FIGURE A-22. Aluminum, fairwater slab, pipe core (style A) AEP/LEP (1" thick).

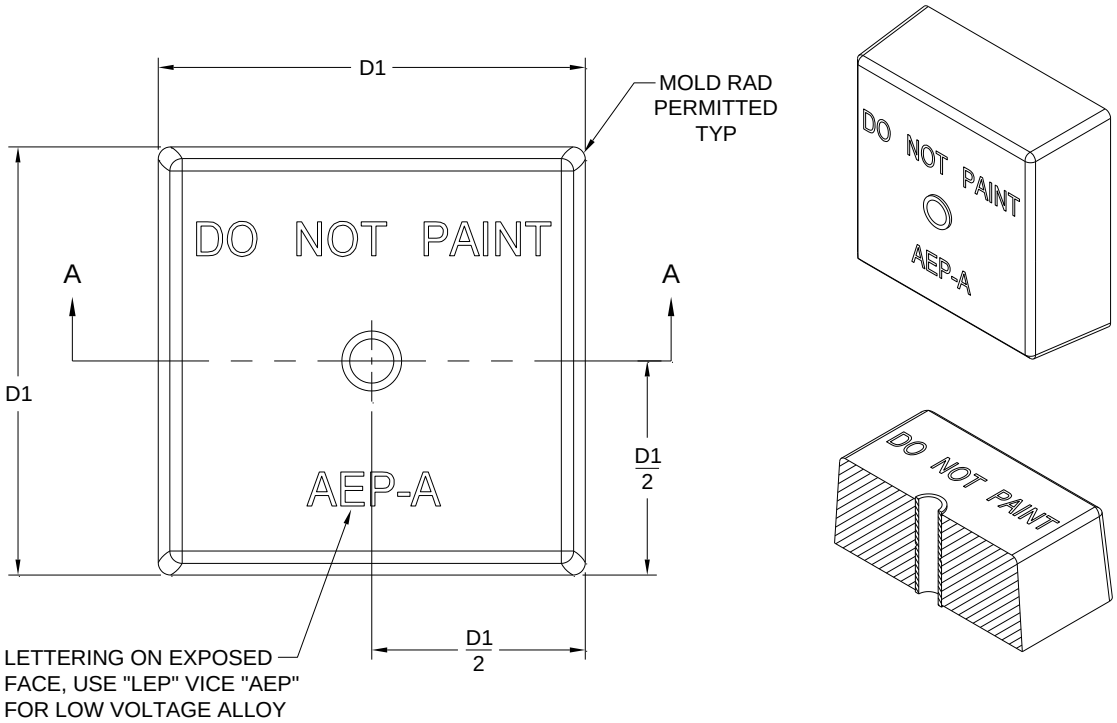

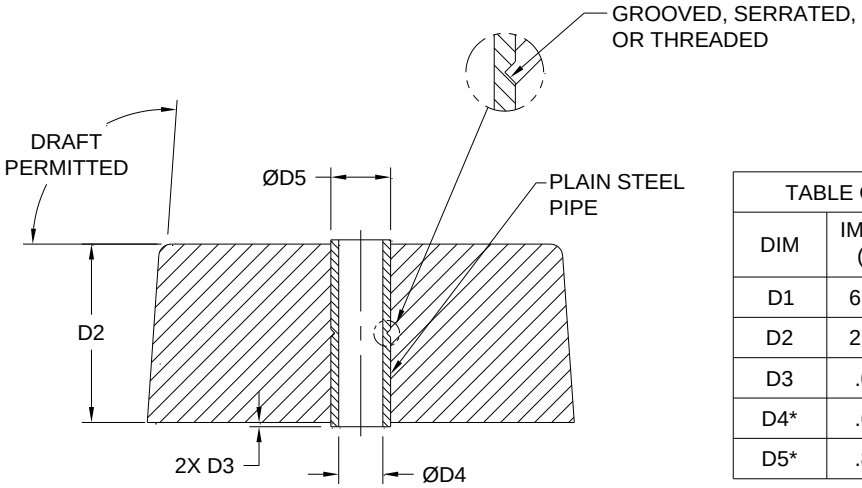

SECTION A-A

TABLE OF DIMENSIONS		
DIM	IMPERIAL (INCH)	METRIC (MM)
D1	6.00±.13	152.4±3.3
D2	2.50±.13	63.5±3.3
D3	.06±.04	1.5±1.0
D4*	.62±.02	15.7±.5
D5*	.84±.02	21.3±.5

* CORRESPONDS TO ASTM A524 1/2" SCHED 40 OR BS EN 10305-1 22MM STEEL PIPE SIZES.

SKETCH E2: FAIRWATER SLAB, STYLE A (PIPE CORE), TYPE AEP OR LEP, 2.50" THICK

MINIMUM WEIGHT = 8.0 LB / 3.6 KG

FIGURE A-23. Aluminum, fairwater slab, pipe core (style A) AEP/LEP (2.5" thick).

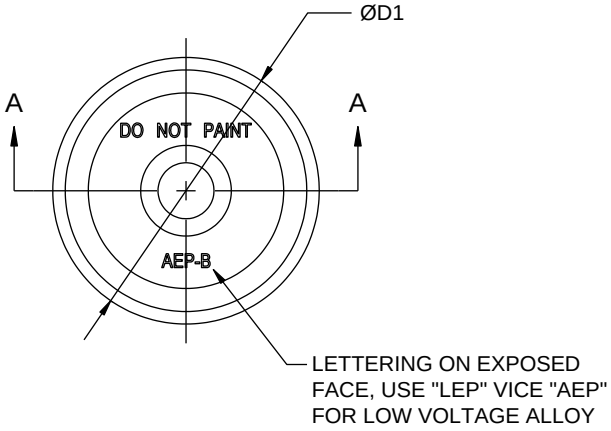

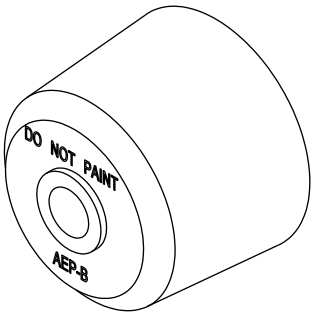

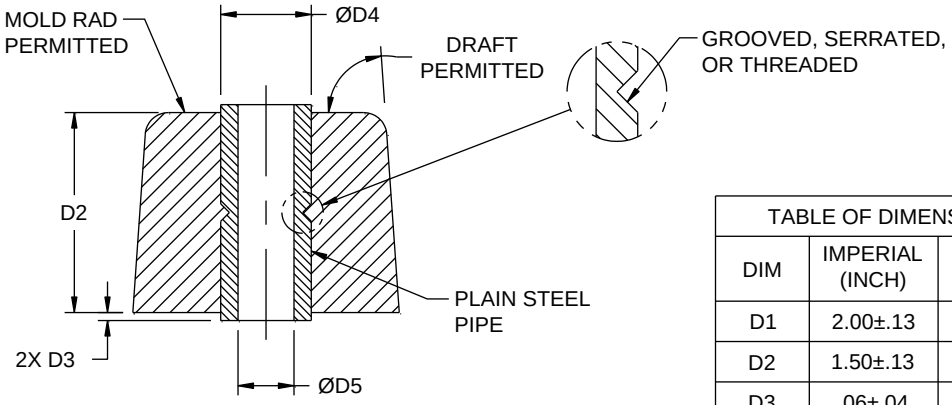

SECTION A-A

TABLE OF DIMENSIONS		
DIM	IMPERIAL (INCH)	METRIC (MM)
D1	2.00±.13	50.8±3.3
D2	1.50±.13	38.1±3.3
D3	.06±.04	1.5±1.0
D4*	.68±.02	17.3±.5
D5*	.42±.02	10.7±.5
D4**	.84±.02	21.4±.5
D5**	.62±.02	15.6±.5

* CORRESPONDS TO ASTM A524 3/8" SCHED 80 OR BS EN 10305-1 18MM STEEL PIPE SIZES.
** CORRESPONDS TO ASTM A524 1/2" SCHED 40 OR BS EN 10305-1 22MM STEEL PIPE SIZES.

SKETCH F1: FAIRWATER SLAB, STYLE B, 2.00" DIAM (PIPE CORE), TYPE AEP OR LEP, 1.50" THICK

MINIMUM WEIGHT = 0.46 LB / 0.21 KG

FIGURE A-24. Aluminum, fairwater slab, pipe core (style B) AEP/LEP (2" diameter, 1.5" thick).

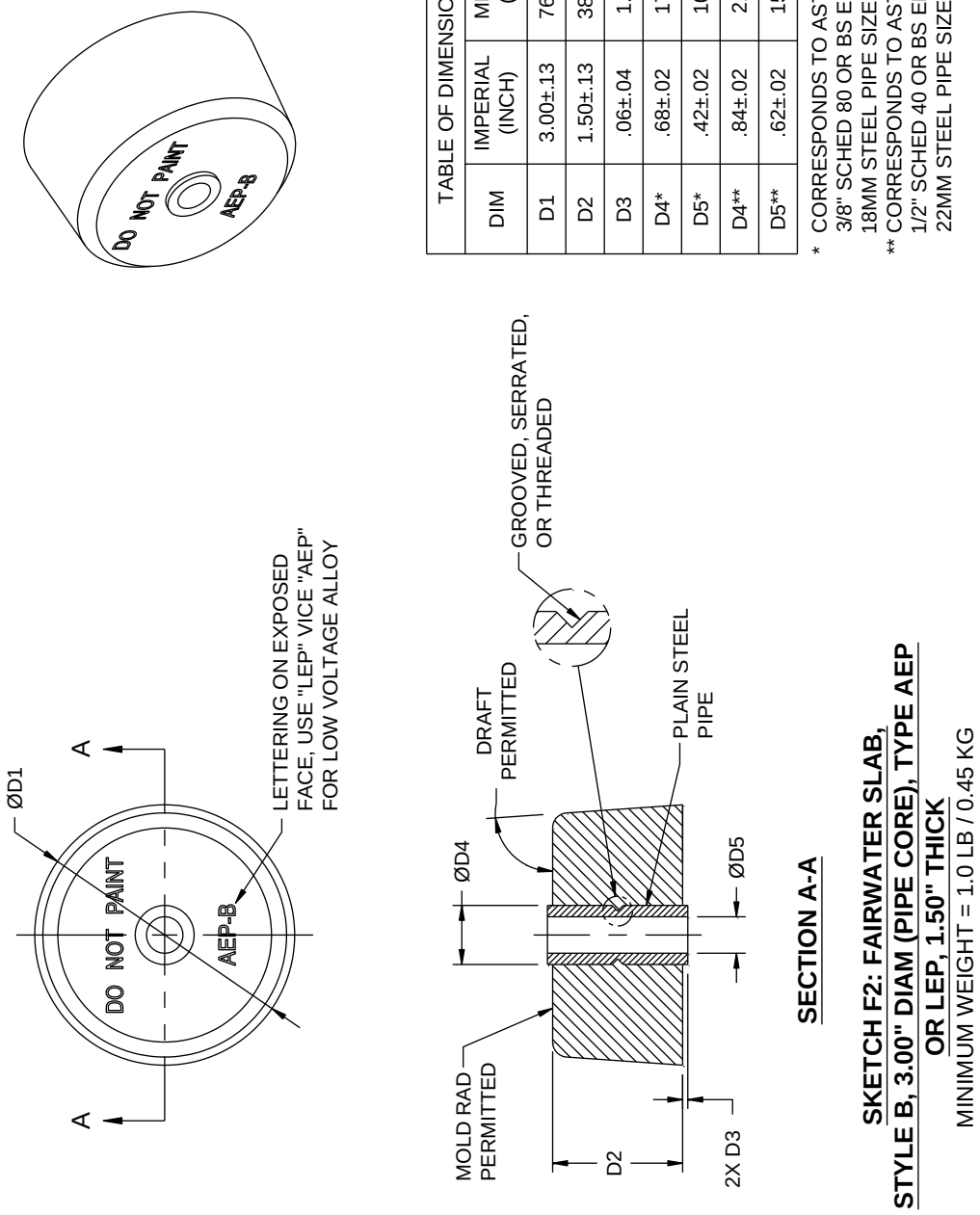

TABLE OF DIMENSIONS		
DIM	IMPERIAL (INCH)	METRIC (MM)
D1	3.00±.13	76.2±3.3
D2	1.50±.13	38.1±3.3
D3	.06±.04	1.5±1.0
D4*	.68±.02	17.3±.5
D5*	.42±.02	10.7±.5
D4**	.84±.02	21.4±.5
D5**	.62±.02	15.6±.5

* CORRESPONDS TO ASTM A524 3/8" SCHED 80 OR BS EN 10305-1 18MM STEEL PIPE SIZES.
** CORRESPONDS TO ASTM A524 1/2" SCHED 40 OR BS EN 10305-1 22MM STEEL PIPE SIZES.

FIGURE A-25. Aluminum, fairwater slab, pipe core (style B) AEP/LEP (3" diameter, 1.5" thick).

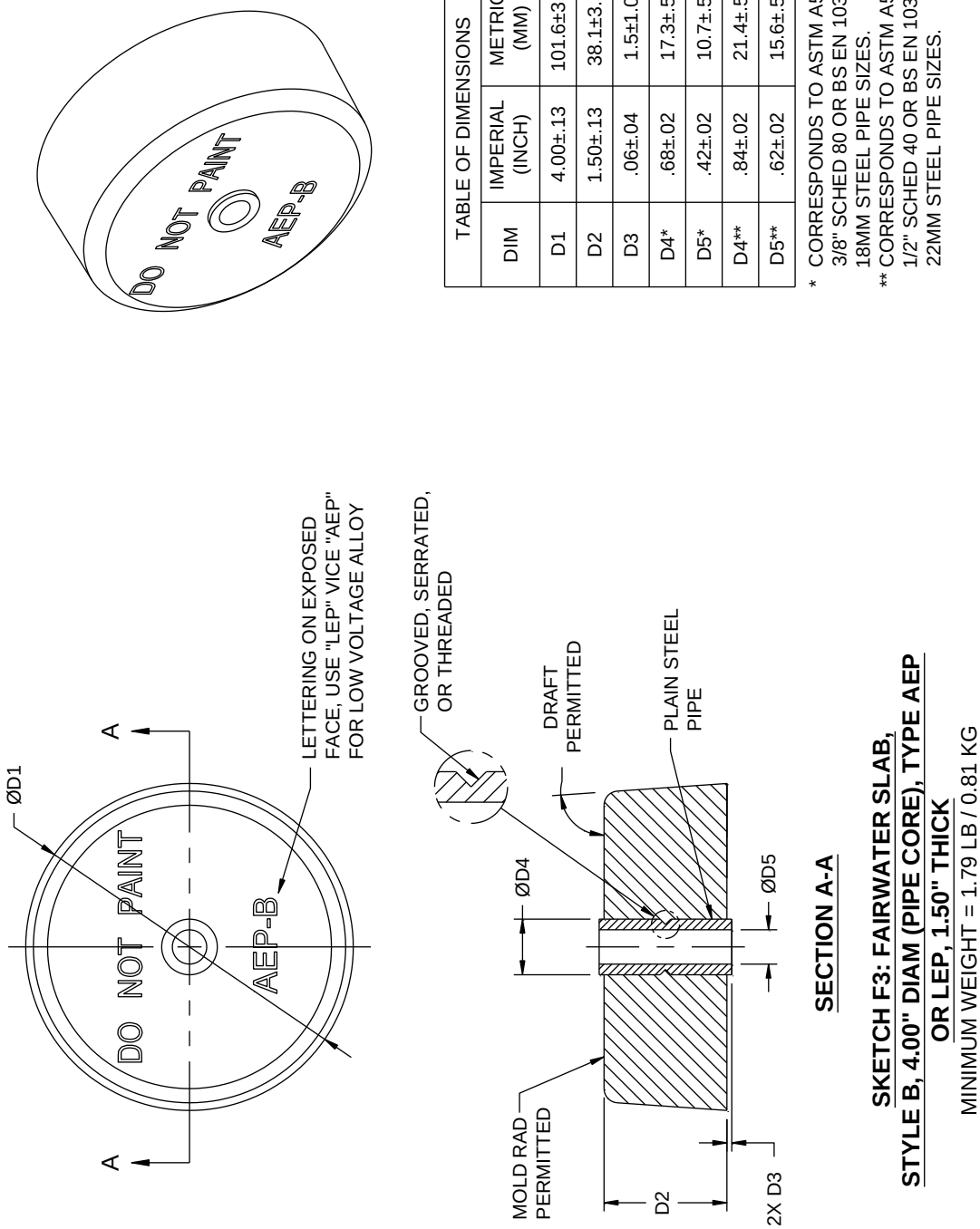

TABLE OF DIMENSIONS		
DIM	IMPERIAL (INCH)	METRIC (MM)
D1	4.00±.13	101.6±3.3
D2	1.50±.13	38.1±3.3
D3	.06±.04	1.5±1.0
D4*	.68±.02	17.3±.5
D5*	.42±.02	10.7±.5
D4**	.84±.02	21.4±.5
D5**	.62±.02	15.6±.5

* CORRESPONDS TO ASTM A524
3/8" SCHED 80 OR BS EN 10305-1
18MM STEEL PIPE SIZES.
** CORRESPONDS TO ASTM A524
1/2" SCHED 40 OR BS EN 10305-1
22MM STEEL PIPE SIZES.

FIGURE A-26. Aluminum, fairwater slab, pipe core (style B) AEP/LEP (4" diameter, 1.5" thick).

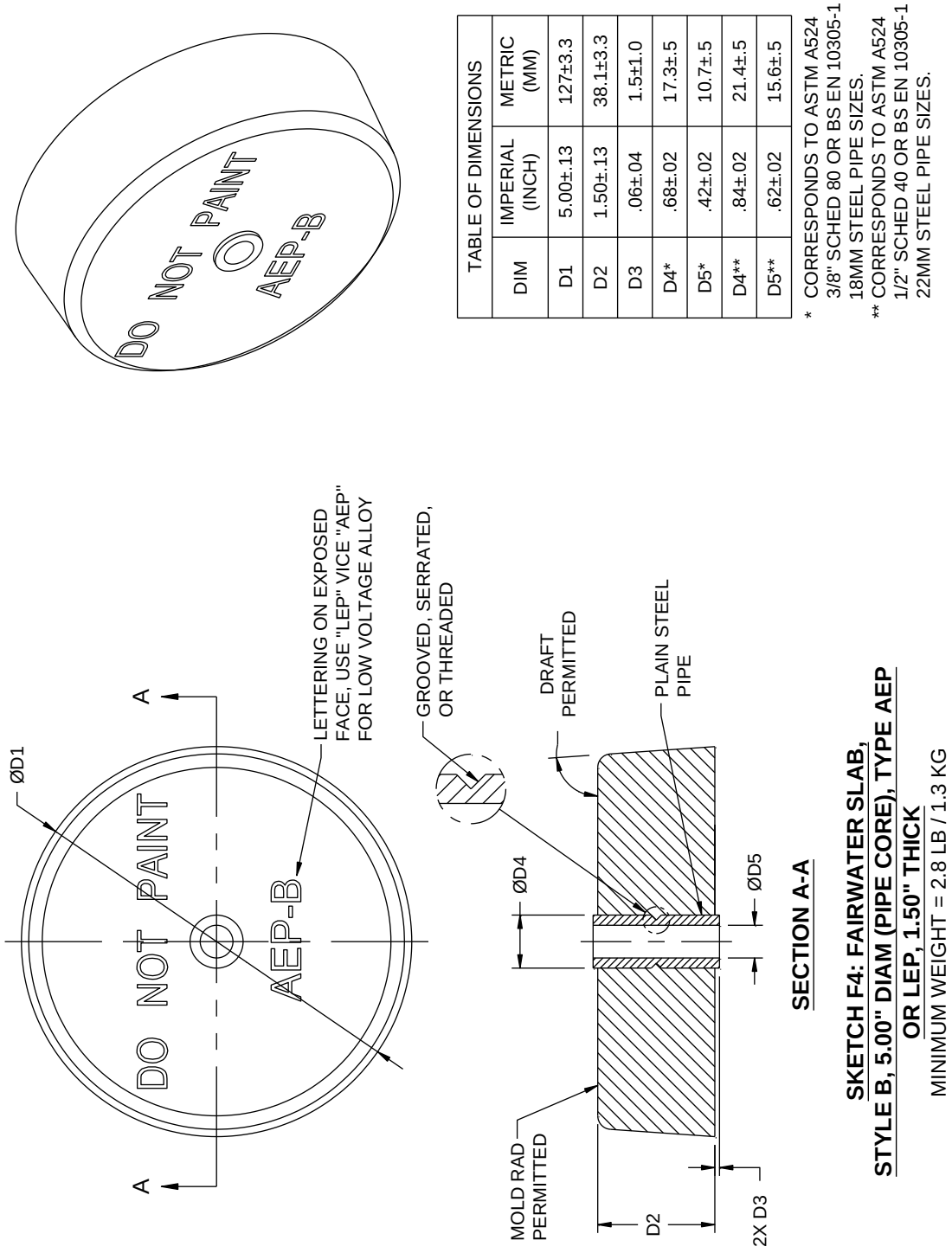

TABLE OF DIMENSIONS		
DIM	IMPERIAL (INCH)	METRIC (MM)
D1	5.00±.13	127±3.3
D2	1.50±.13	38.1±3.3
D3	.06±.04	1.5±1.0
D4*	.68±.02	17.3±.5
D5*	.42±.02	10.7±.5
D4**	.84±.02	21.4±.5
D5**	.62±.02	15.6±.5

* CORRESPONDS TO ASTM A524 3/8" SCHED 80 OR BS EN 10305-1 18MM STEEL PIPE SIZES.
** CORRESPONDS TO ASTM A524 1/2" SCHED 40 OR BS EN 10305-1 22MM STEEL PIPE SIZES.

FIGURE A-27. Aluminum, fairwater slab, pipe core (style B) AEP/LEP (5" diameter, 1.5" thick).

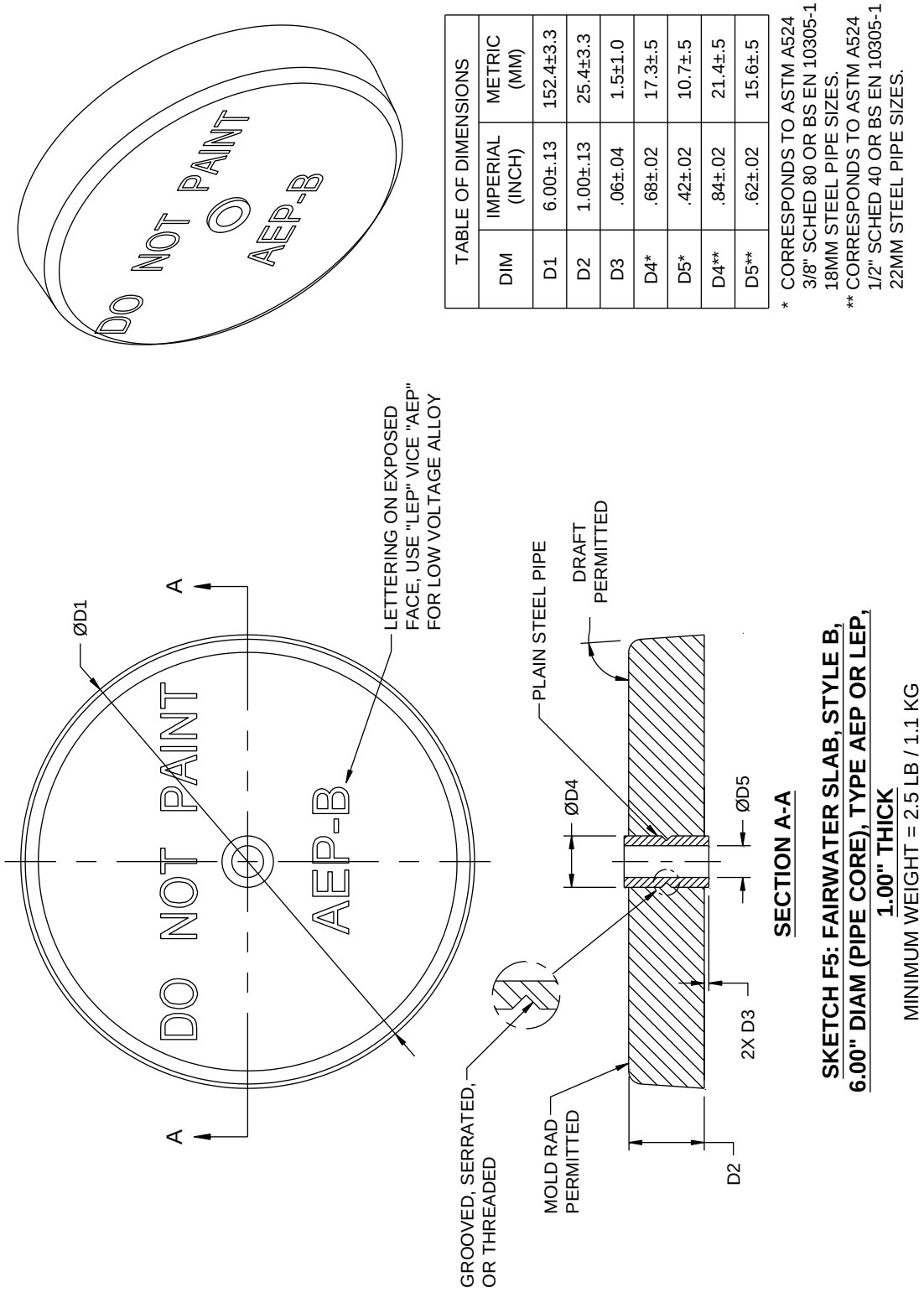

TABLE OF DIMENSIONS

DIM	IMPERIAL (INCH)	METRIC (MM)
D1	6.00±.13	152.4±3.3
D2	1.00±.13	25.4±3.3
D3	.06±.04	1.5±1.0
D4*	.68±.02	17.3±.5
D5*	.42±.02	10.7±.5
D4**	.84±.02	21.4±.5
D5**	.62±.02	15.6±.5

* CORRESPONDS TO ASTM A524 3/8" SCHED 80 OR BS EN 10305-1 18MM STEEL PIPE SIZES.
** CORRESPONDS TO ASTM A524 1/2" SCHED 40 OR BS EN 10305-1 22MM STEEL PIPE SIZES.

FIGURE A-28. Aluminum, fairwater slab, pipe core (style B) AEP/LEP (6" diameter, 1" thick).

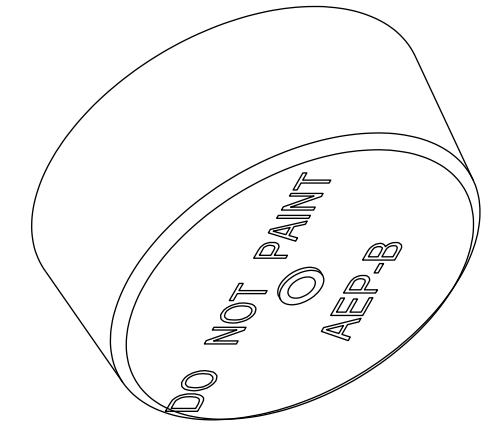

TABLE OF DIMENSIONS		
DIM	IMPERIAL (INCH)	METRIC (MM)
D1	6.00±.13	152.4±3.3
D2	2.50±.13	63.5±3.3
D3	.06±.04	1.5±1.0
D4*	.68±.02	17.3±.5
D5*	.42±.02	10.7±.5
D4**	.84±.02	21.4±.5
D5**	.62±.02	15.6±.5

* CORRESPONDS TO ASTM A524
3/8" SCHED 80 OR BS EN 10305-1
18MM STEEL PIPE SIZES.
** CORRESPONDS TO ASTM A524
1/2" SCHED 40 OR BS EN 10305-1
22MM STEEL PIPE SIZES.

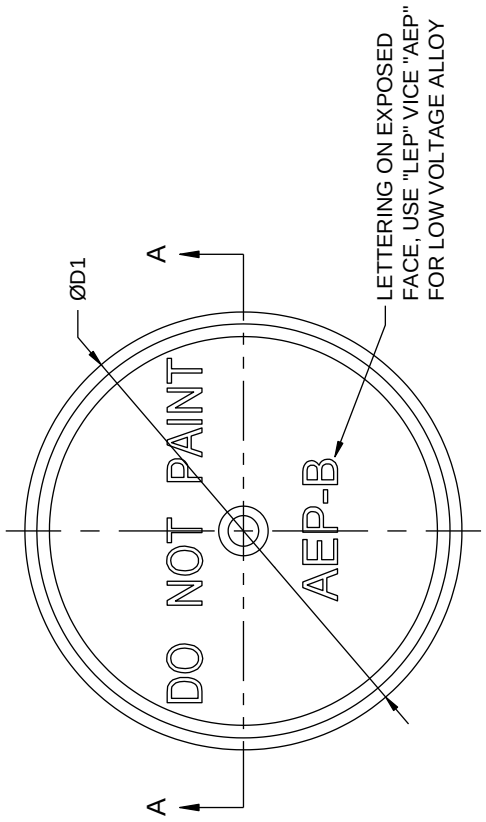

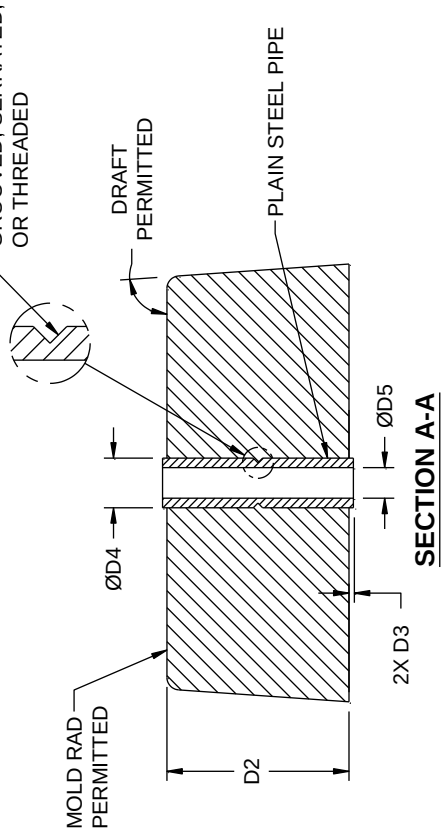

SECTION A-A

SKETCH F6: FAIRWATER SLAB, STYLE B, 6.00" DIAM (PIPE CORE), TYPE AEP OR LEP,2.50" THICK

MINIMUM WEIGHT = 6.3 LB / 2.9 KG

FIGURE A-29. Aluminum, fairwater slab, pipe core (style B) AEP/LEP (6" diameter, 2.5" thick).

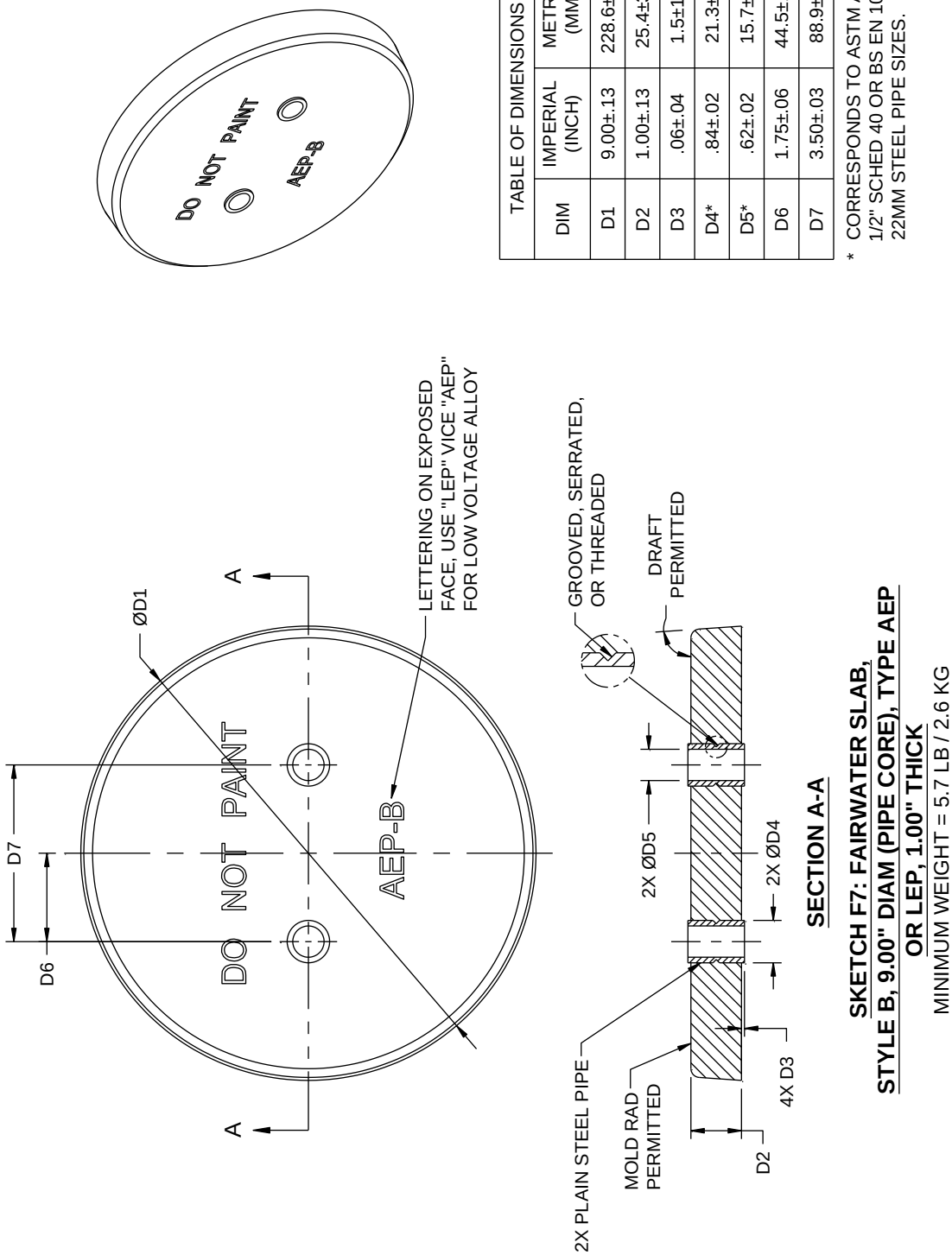

TABLE OF DIMENSIONS		
DIM	IMPERIAL (INCH)	METRIC (MM)
D1	9.00±.13	228.6±3.3
D2	1.00±.13	25.4±3.3
D3	.06±.04	1.5±1.0
D4*	.84±.02	21.3±.5
D5*	.62±.02	15.7±.5
D6	1.75±.06	44.5±1.5
D7	3.50±.03	88.9±.8

* CORRESPONDS TO ASTM A524 1/2" SCHED 40 OR BS EN 10305-1 22MM STEEL PIPE SIZES.

FIGURE A-30. Aluminum, fairwater slab, pipe core (style B) AEP/LEP (9" diameter, 1" thick).

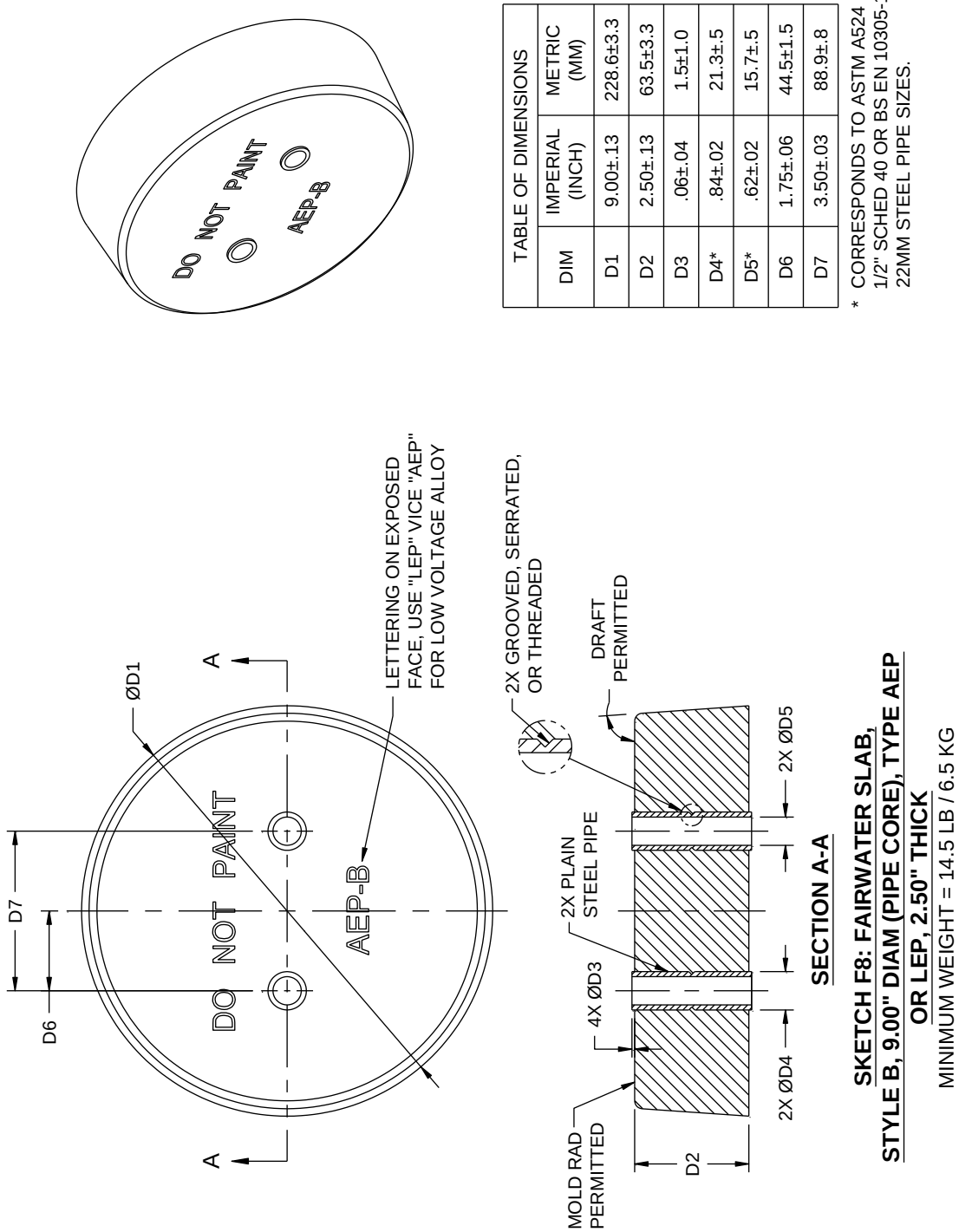

TABLE OF DIMENSIONS		
DIM	IMPERIAL (INCH)	METRIC (MM)
D1	9.00±.13	228.6±3.3
D2	2.50±.13	63.5±3.3
D3	.06±.04	1.5±1.0
D4*	.84±.02	21.3±.5
D5*	.62±.02	15.7±.5
D6	1.75±.06	44.5±1.5
D7	3.50±.03	88.9±.8

* CORRESPONDS TO ASTM A524 1/2" SCHED 40 OR BS EN 10305-1 22MM STEEL PIPE SIZES.

FIGURE A-31. Aluminum, fairwater slab, pipe core (style B) type AEP/LEP (9" diameter, 2.5" thick).

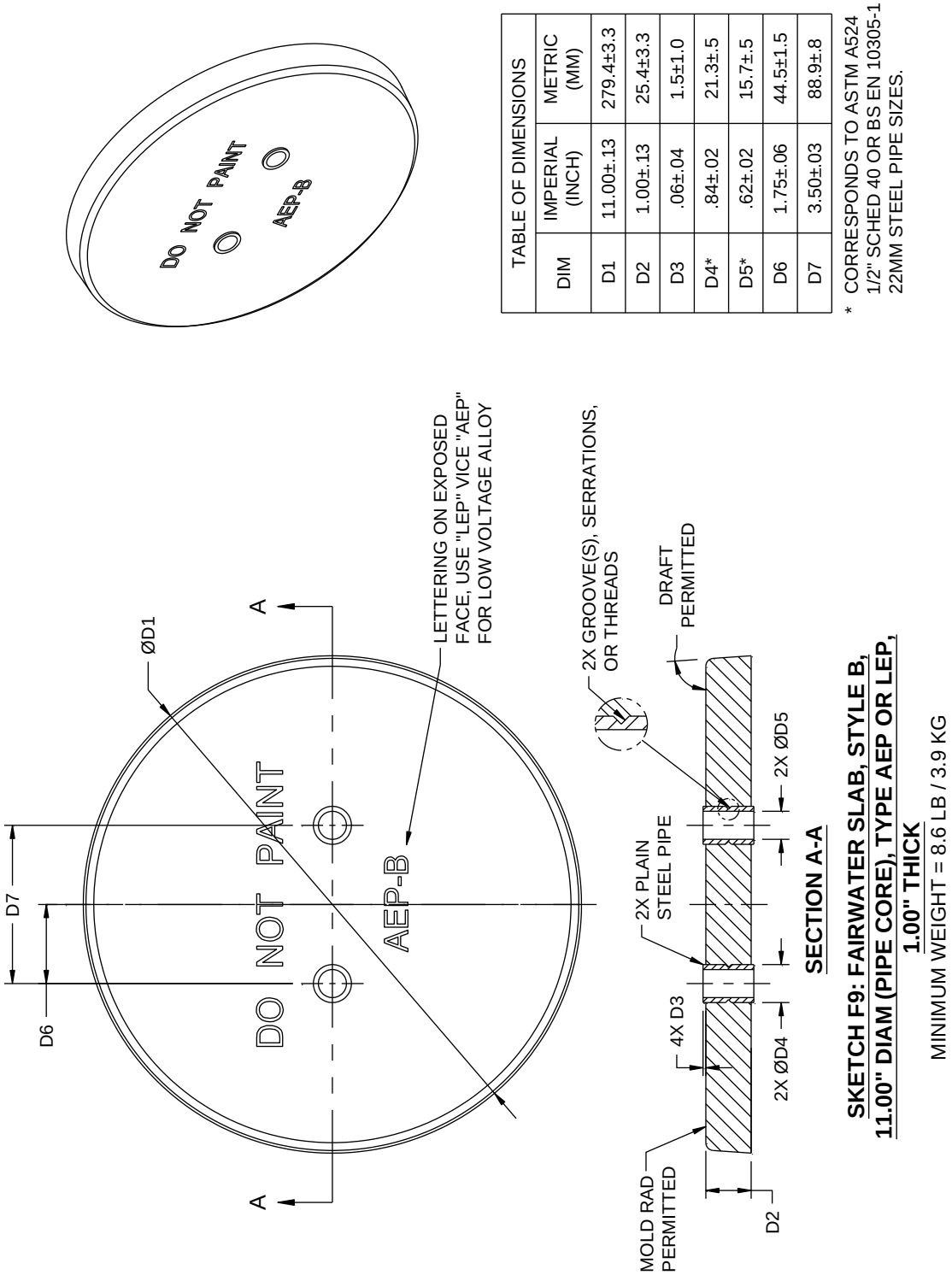

TABLE OF DIMENSIONS		
DIM	IMPERIAL (INCH)	METRIC (MM)
D1	11.00±.13	279.4±3.3
D2	1.00±.13	25.4±3.3
D3	.06±.04	1.5±1.0
D4*	.84±.02	21.3±.5
D5*	.62±.02	15.7±.5
D6	1.75±.06	44.5±1.5
D7	3.50±.03	88.9±.8

* CORRESPONDS TO ASTM A524 1/2" SCHED 40 OR BS EN 10305-1 22MM STEEL PIPE SIZES.

FIGURE A-32. Aluminum, fairwater slab, pipe core (style B) type AEP/LEP (11" diameter, 1" thick).

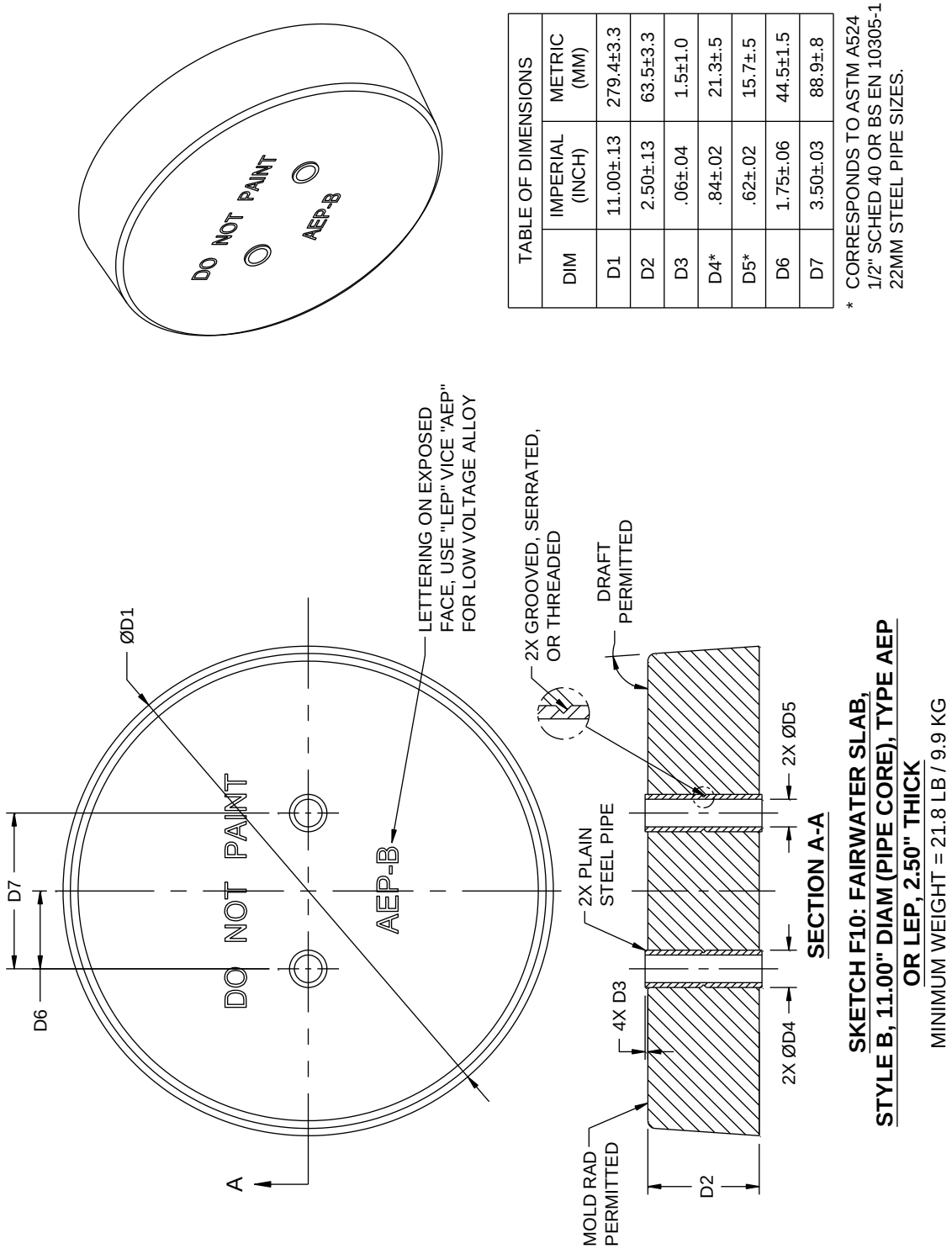

TABLE OF DIMENSIONS		
DIM	IMPERIAL (INCH)	METRIC (MM)
D1	11.00±.13	279.4±3.3
D2	2.50±.13	63.5±3.3
D3	.06±.04	1.5±1.0
D4*	.84±.02	21.3±.5
D5*	.62±.02	15.7±.5
D6	1.75±.06	44.5±1.5
D7	3.50±.03	88.9±.8

* CORRESPONDS TO ASTM A524 1/2" SCHED 40 OR BS EN 10305-1 22MM STEEL PIPE SIZES.

SKETCH F10: FAIRWATER SLAB, STYLE B, 11.00" DIAM (PIPE CORE), TYPE AEP OR LEP, 2.50" THICK

MINIMUM WEIGHT = 21.8 LB / 9.9 KG

FIGURE A-33. Aluminum, fairwater slab, pipe core (style B) type AEP/LEP (11" diameter, 2.5" thick).

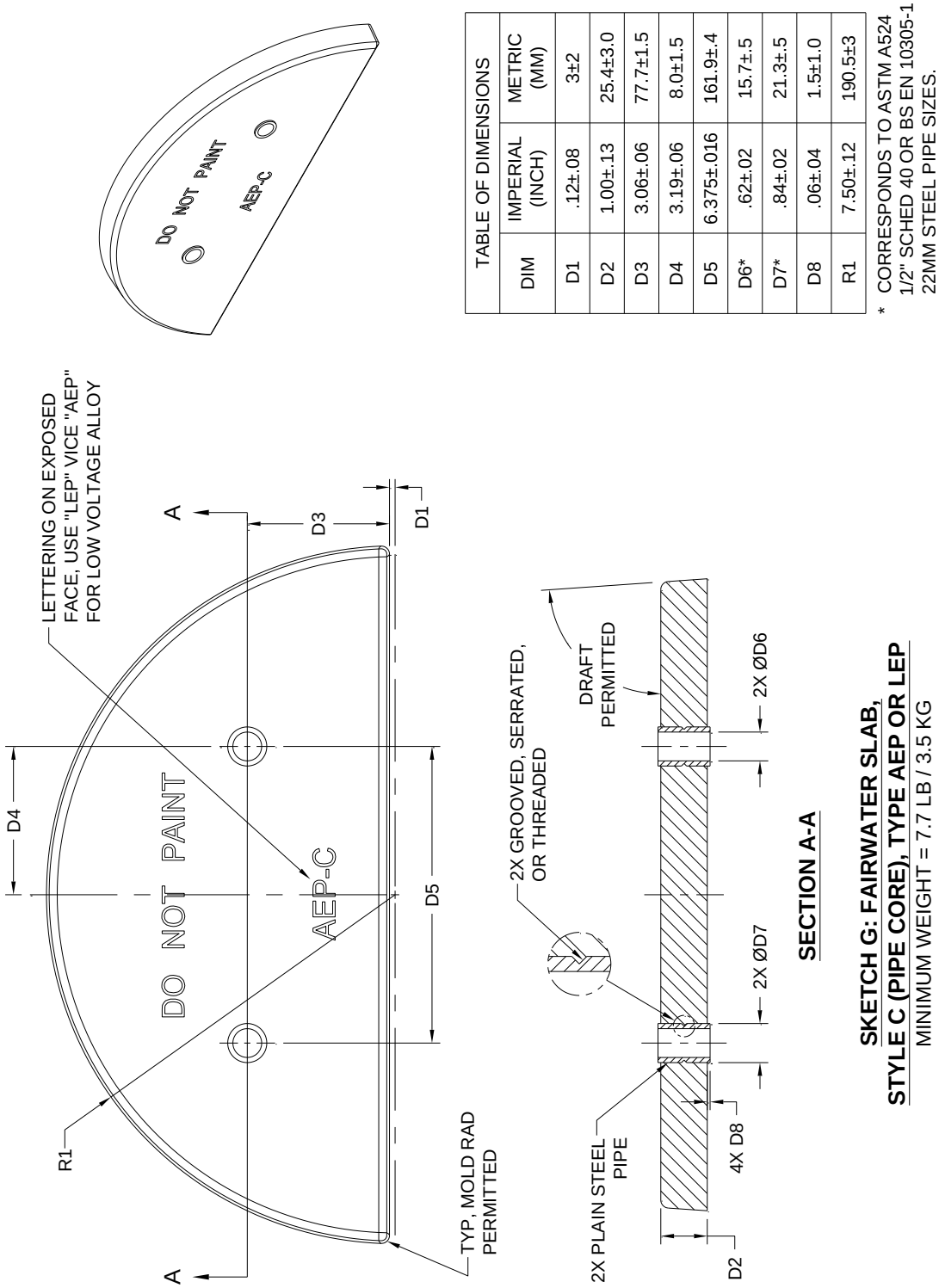

TABLE OF DIMENSIONS		
DIM	IMPERIAL (INCH)	METRIC (MM)
D1	.12±.08	3±2
D2	1.00±.13	25.4±3.0
D3	3.06±.06	77.7±1.5
D4	3.19±.06	8.0±1.5
D5	6.375±.016	161.9±.4
D6*	.62±.02	15.7±.5
D7*	.84±.02	21.3±.5
D8	.06±.04	1.5±1.0
R1	7.50±.12	190.5±3

* CORRESPONDS TO ASTM A524 1/2" SCHED 40 OR BS EN 10305-1 22MM STEEL PIPE SIZES.

FIGURE A-34. Aluminum, fairwater slab, pipe core (style C) type AEP/LEP.

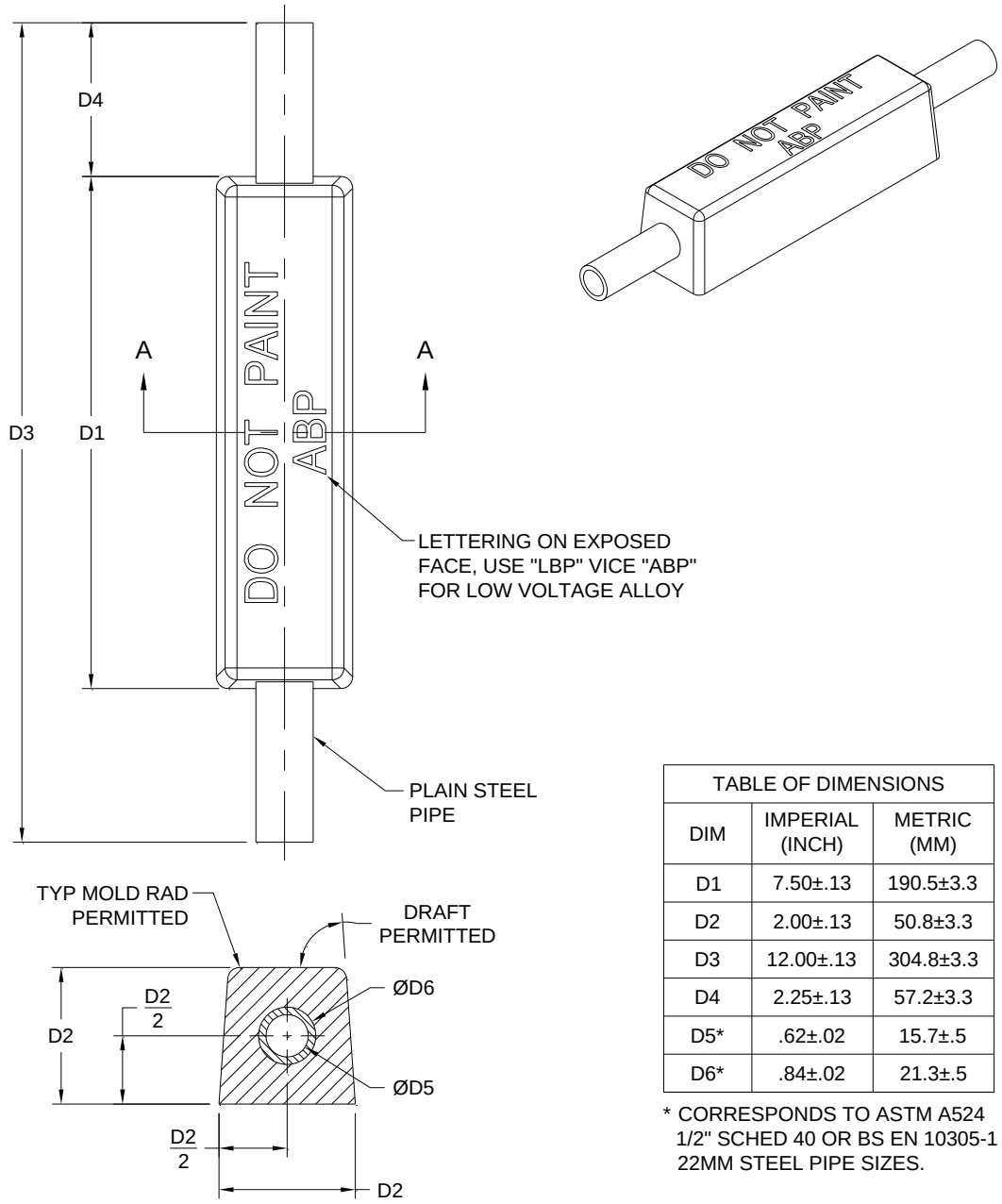

TABLE OF DIMENSIONS		
DIM	IMPERIAL (INCH)	METRIC (MM)
D1	7.50±.13	190.5±3.3
D2	2.00±.13	50.8±3.3
D3	12.00±.13	304.8±3.3
D4	2.25±.13	57.2±3.3
D5*	.62±.02	15.7±.5
D6*	.84±.02	21.3±.5

* CORRESPONDS TO ASTM A524 1/2" SCHED 40 OR BS EN 10305-1 22MM STEEL PIPE SIZES.

SKETCH H: BAR SHAPE (PIPE CORE), TYPE ABP OR LBP,
MINIMUM WEIGHT = 2.9 LB / 1.3 KG

FIGURE A-35. Aluminum, bar, pipe core type ABP/LBP.

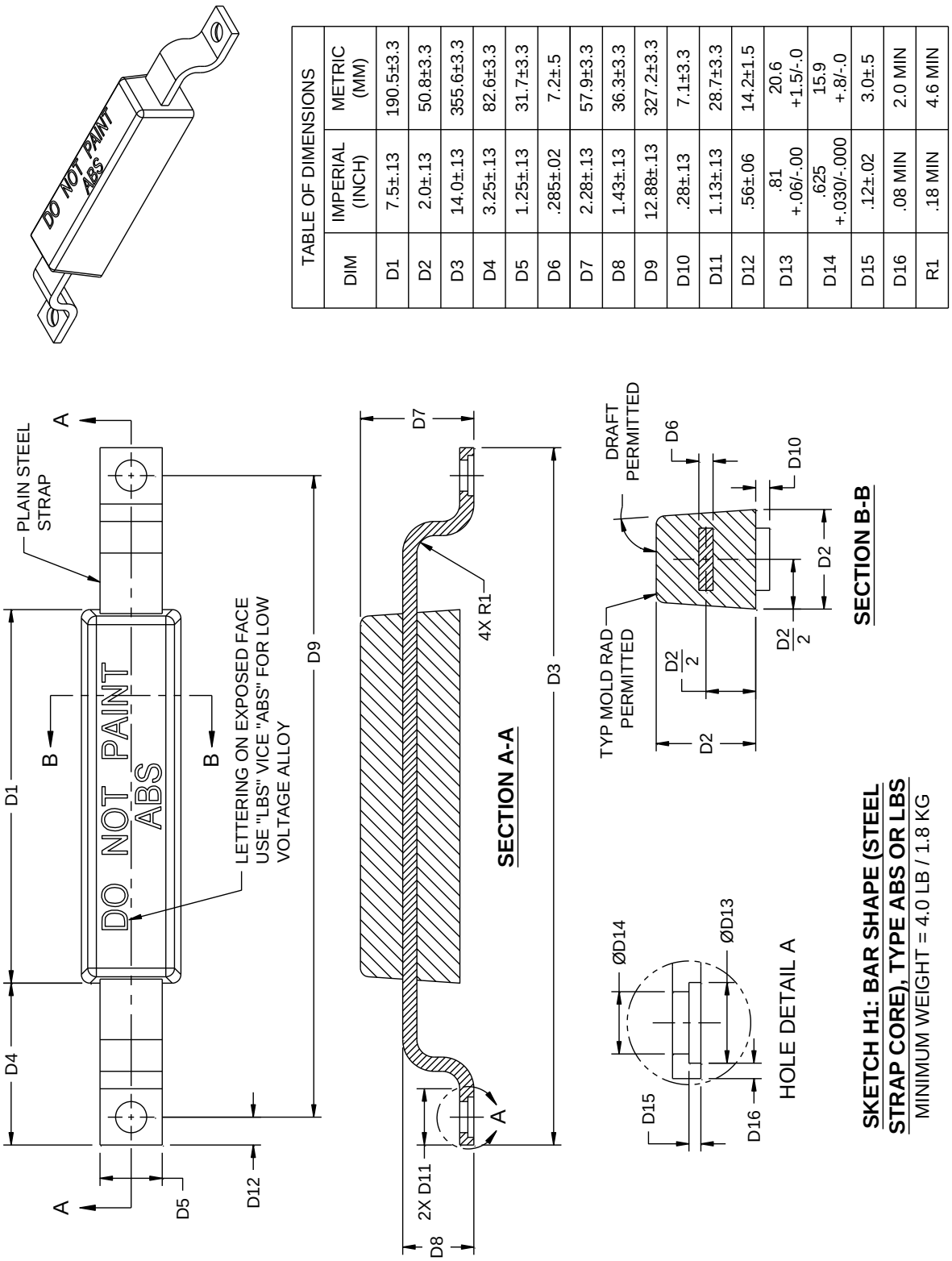

TABLE OF DIMENSIONS		
DIM	IMPERIAL (INCH)	METRIC (MM)
D1	7.5±.13	190.5±3.3
D2	2.0±.13	50.8±3.3
D3	14.0±.13	355.6±3.3
D4	3.25±.13	82.6±3.3
D5	1.25±.13	31.7±3.3
D6	.285±.02	7.2±.5
D7	2.28±.13	57.9±3.3
D8	1.43±.13	36.3±3.3
D9	12.88±.13	327.2±3.3
D10	.28±.13	7.1±3.3
D11	1.13±.13	28.7±3.3
D12	.56±.06	14.2±1.5
D13	.81 +.06/-.00	20.6 +1.5/-.0
D14	.625 +.030/-.000	15.9 +.8/-.0
D15	.12±.02	3.0±.5
D16	.08 MIN	2.0 MIN
R1	.18 MIN	4.6 MIN

FIGURE A-36. Aluminum, bar, steel strap core type ABS/LBS.

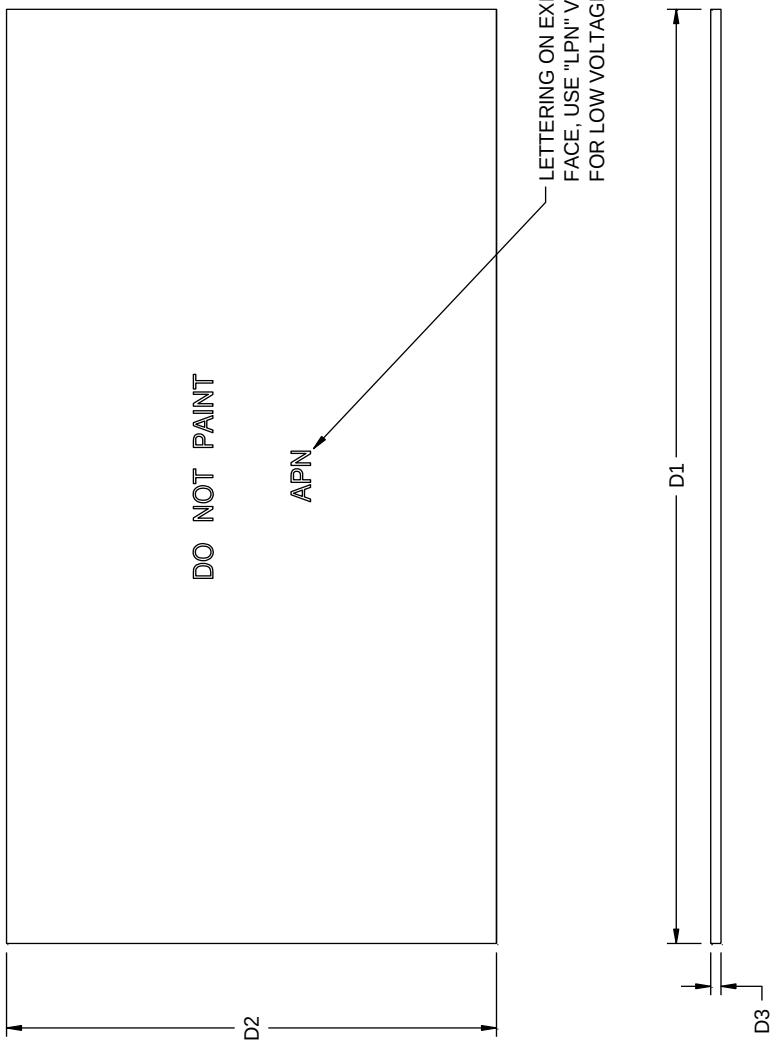

TABLE OF DIMENSIONS		
DIM	IMPERIAL (INCH)	METRIC (MM)
D1	48.00±.25	1219±6.4
D2	24.00±.25	609.6±6.4
D3	.50±.06	12.7±1.5

SKETCH J1: PLATE SHAPE (NO CORE), TYPE APN OR LPN, 0.50" THICK

MINIMUM WEIGHT = 52.4 LB / 23.8 KG

FIGURE A-37. Aluminum, plate shape (no core), type APN/LPN (0.50" thick).

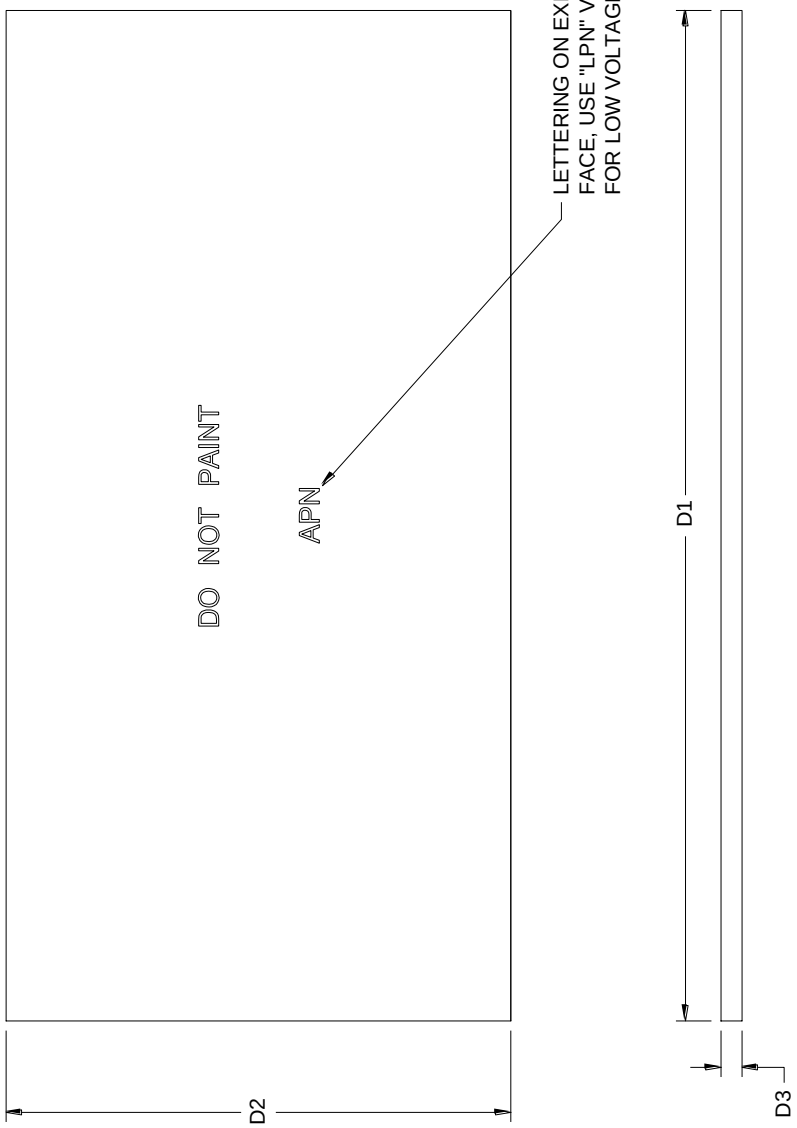

TABLE OF DIMENSIONS		
DIM	IMPERIAL (INCH)	METRIC (MM)
D1	48.00±.25	1219±6.4
D2	24.00±.25	609.6±6.4
D3	1.00±.13	25.4±3.3

SKETCH J2: PLATE SHAPE (NO CORE), TYPE APN OR LPN, 1.00" THICK

MINIMUM WEIGHT = 104.9 LB / 47.6 KG

FIGURE A-38. Aluminum, plate shape (no core) type APN/LPN (1.00" thick).

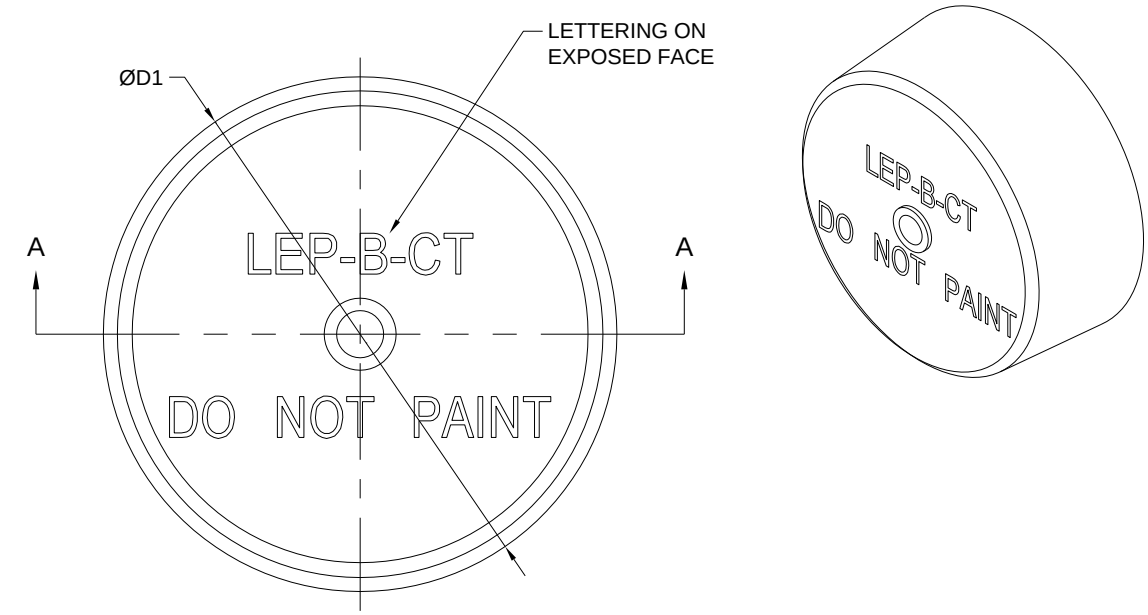

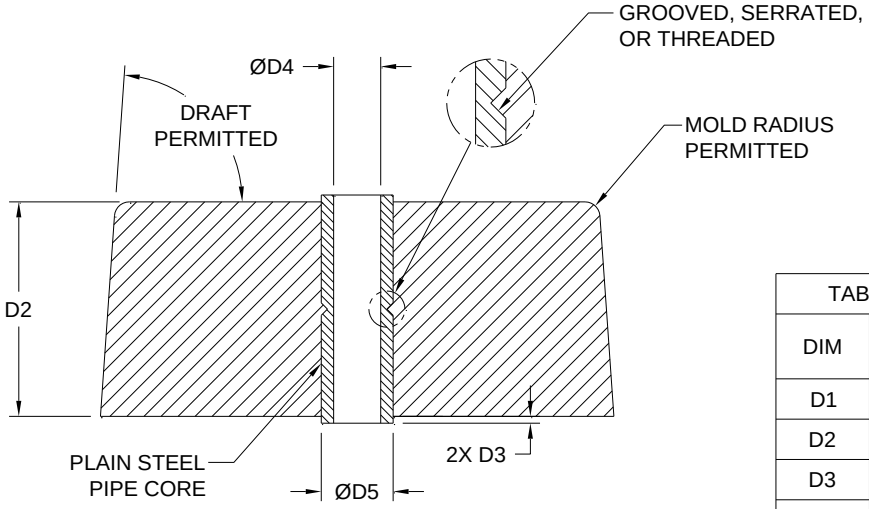

SECTION A-A

TABLE OF DIMENSIONS		
DIM	IMPERIAL (INCH)	METRIC (MM)
D1	6.00±.12	152.4±3
D2	2.50±.12	63.5±3.0
D3	.08±.04	2.0±1.0
D4*	.55±.02	14.0±.5
D5*	.84±.02	21.3±.8

* CORRESPONDS TO ASTM A524 1/2" SCHED 40 OR BS EN 10305-1 22MM STEEL PIPE SIZES.

SKETCH K1: FAIRWATER SLAB (PIPE CORE), CLOSE TOLERANCE, TYPE LEP-B-CT

MINIMUM WEIGHT = 6.3 LB / 2.9 KG

ANODE MATERIAL MUST BE LOW VOLTAGE ALLOY

FIGURE A-39. Aluminum, fairwater slab (pipe core) type LEP-B-CT.

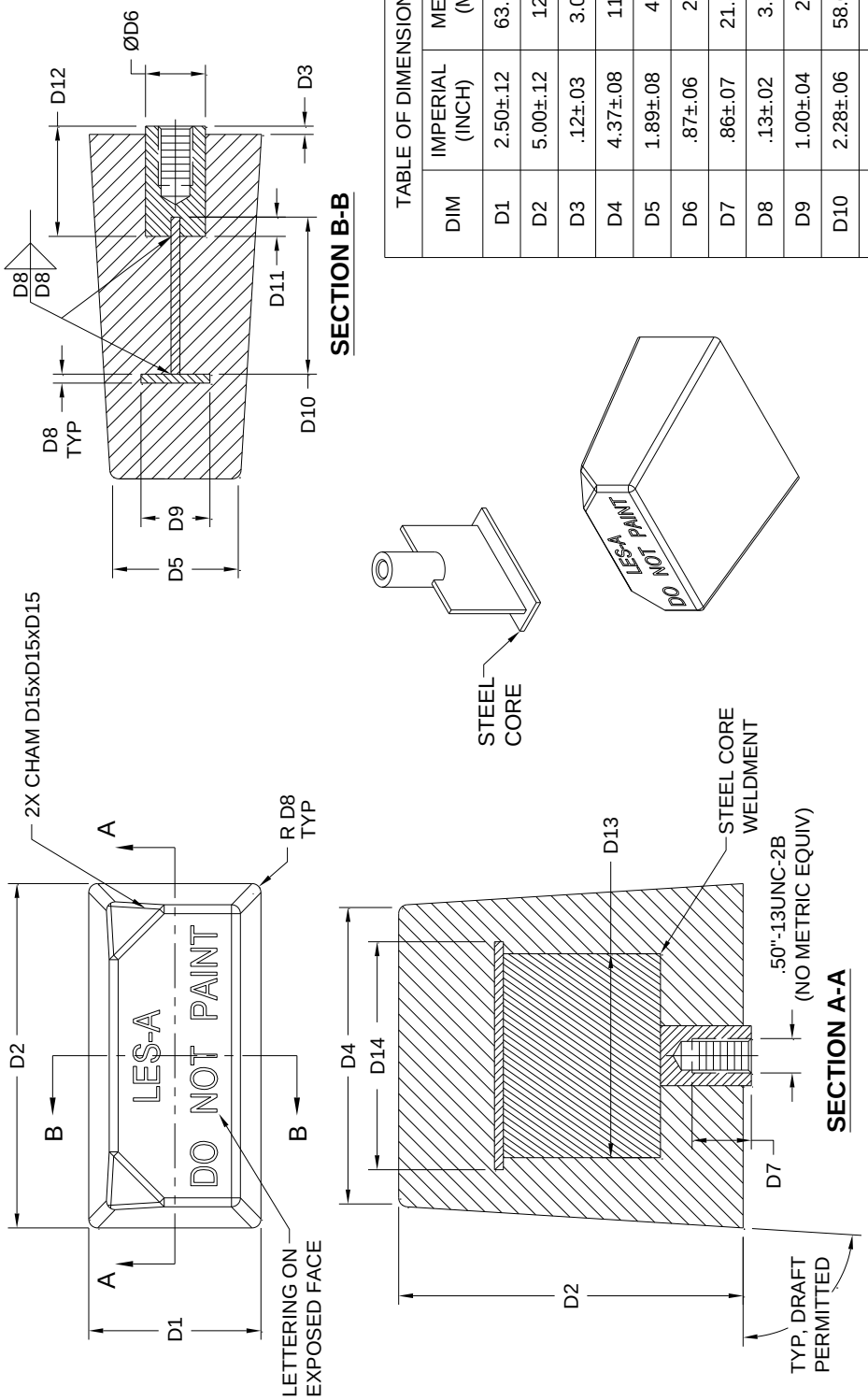

TABLE OF DIMENSIONS		
DIM	IMPERIAL (INCH)	METRIC (MM)
D1	2.50±.12	63.5±3.0
D2	5.00±.12	127±3
D3	.12±.03	3.0±0.7
D4	4.37±.08	111±2
D5	1.89±.08	48±2
D6	.87±.06	22±1
D7	.86±.07	21.8±1.7
D8	.13±.02	3.3±.5
D9	1.00±.04	25±1
D10	2.28±.06	58.0±1.5
D11	.28±.04	7.1±1
D12	1.60±.08	40.6±2.0
D13	2.96±.08	75±2
D14	3.31±.08	84±2
D15	.79±.12	20±3

FIGURE A-40. Aluminum, chamfered rectangular slab (threaded bushing welded core) type LES-A.

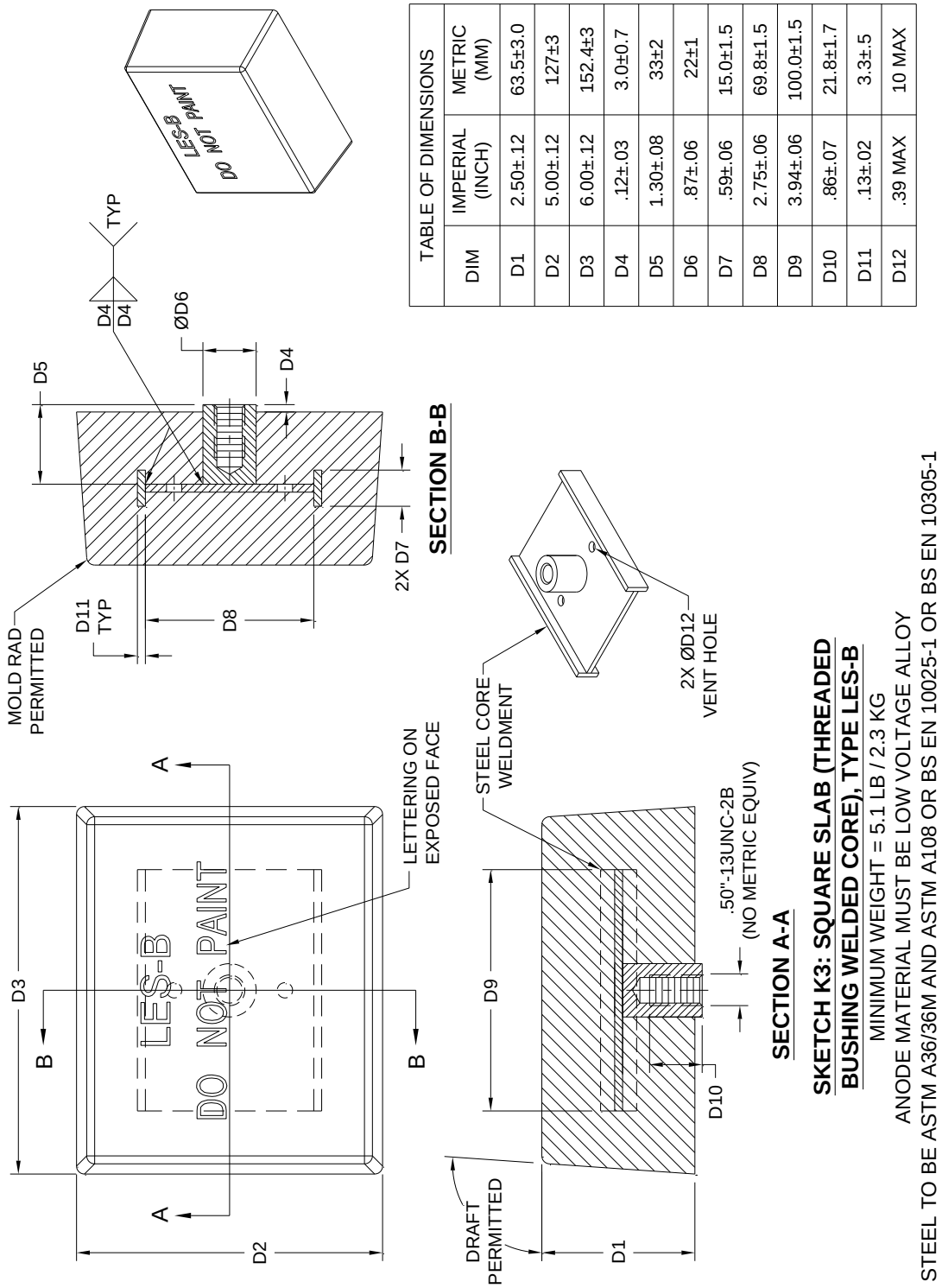

TABLE OF DIMENSIONS		
DIM	IMPERIAL (INCH)	METRIC (MM)
D1	2.50±.12	63.5±3.0
D2	5.00±.12	127±3
D3	6.00±.12	152.4±3
D4	.12±.03	3.0±0.7
D5	1.30±.08	33±2
D6	.87±.06	22±1
D7	.59±.06	15.0±1.5
D8	2.75±.06	69.8±1.5
D9	3.94±.06	100.0±1.5
D10	.86±.07	21.8±1.7
D11	.13±.02	3.3±.5
D12	.39 MAX	10 MAX

FIGURE A-41. Aluminum, square slab (threaded bushing welded core) type LES-B.

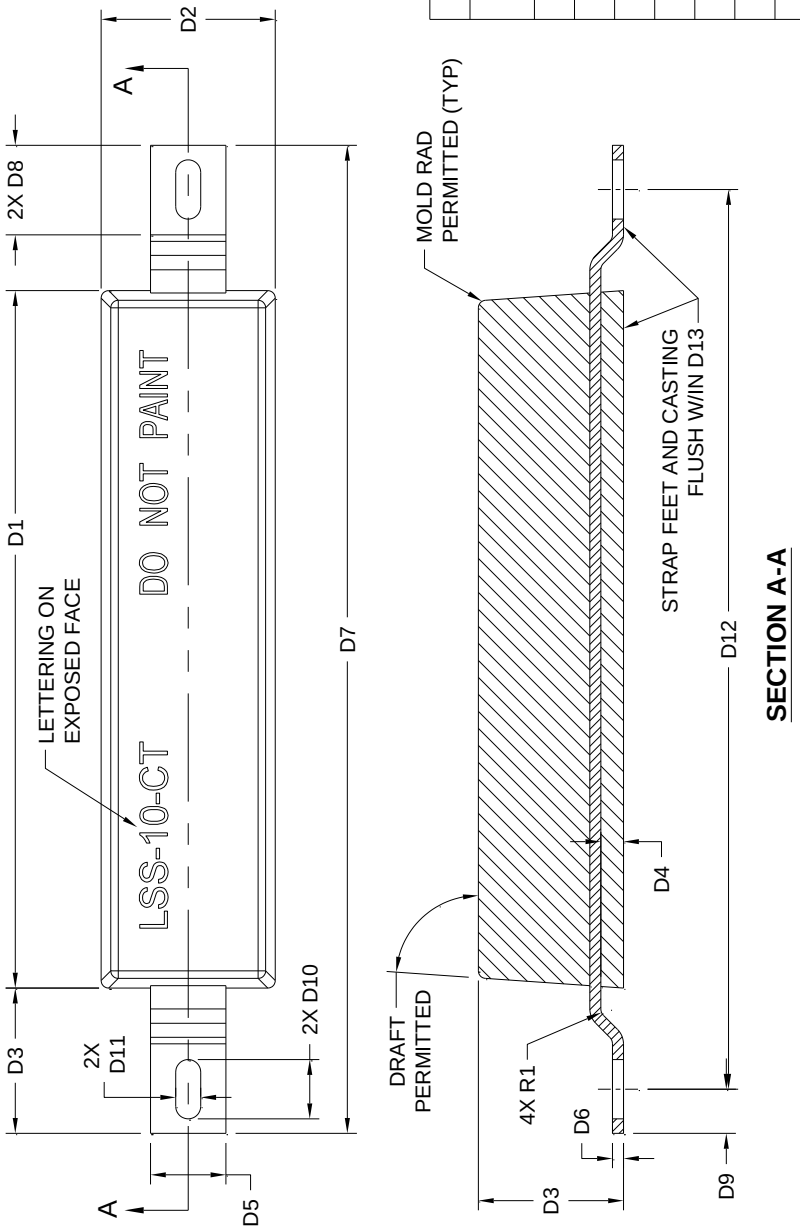

TABLE OF DIMENSIONS		
DIM	IMPERIAL (INCH)	METRIC (MM)
D1	12.00±.12	304.8±3
D2	3.00±.12	76.2±3
D3	2.50±.12	63.5±3.0
D4	.39±.08	9.9±2
D5	1.30±.04	33±1
D6	.19±.04	4.8±1
D7	17.00±.12	431.8±3
D8	1.54±.06	39.1±2
D9	.76±.06	19.3±1.5
D10	1.02±.03	25.9±.7
D11	.43±.03	10.9±.7
D12	15.47±.04	392.9±1
D13	±.06	±1.5
R1	.16 MIN	4.0 MIN

SKETCH K4: SUBMARINE SLAB (STEEL STRAP), CLOSE TOLERACE, TYPE LSS-10-CT

MINIMUM WEIGHT = 8.7 LB / 3.9 KG
ANODE MATERIAL MUST BE LOW VOLTAGE ALLOY
STEEL TO BE ASTM A36/36M AND ASTM A108 OR
BS EN 10025-1 OR BS EN 10305-1

FIGURE A-42. Aluminum, submarine slab (steel strap) close tolerance, type LSS-10-CT.

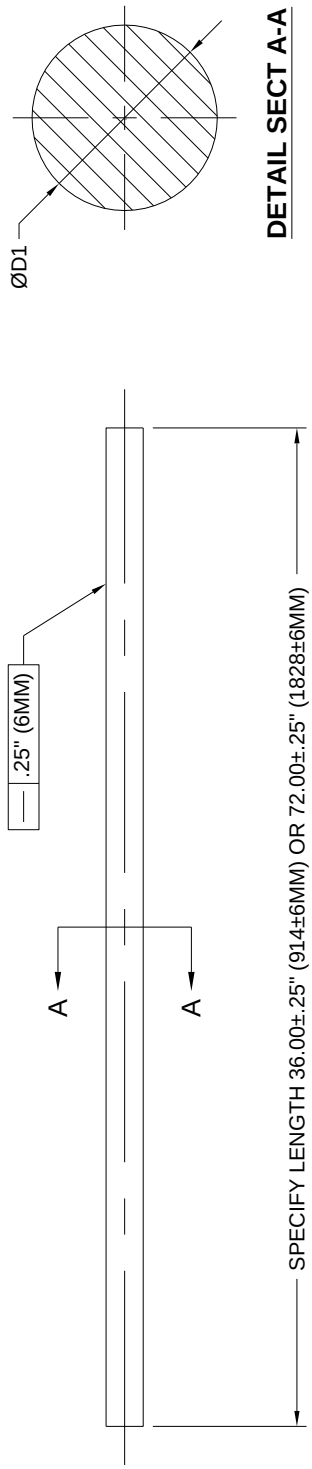

TABLE OF DIMENSIONS

NOM PIPE SIZE	D1 (INCHES) ±0.020 INCH	D1 (MM) ±0.5 MM	NOM WT PER 36" LENGTH (LB)	NOM WT PER 36" LENGTH (KG)
1/8	.405	10.3	.45	.20
1/4	.540	13.7	.80	.36
3/8	.675	17.1	1.25	.57
1/2	.840	21.3	1.94	.88
3/4	1.050	26.7	3.04	1.38
1	1.315	33.4	4.76	2.16

SKETCH L: ROD SHAPE (NO CORE), TYPE LRN, 36" LONG OR 72" LONG

1. MUST BE LOW VOLTAGE ALLOY TYPE.
2. WHEN REQUIRED, THE LENGTH OF THIS ANODE SHALL BE ADJUSTED TO HAVE EQUIVALENT AMPERE-HOURS TO CORRESPONDING ZINC ANODE, TYPE ZRN, SHOWN IN MIL-A-18001K.

FIGURE A-43. Aluminum, rod shape (no core) type LRN.

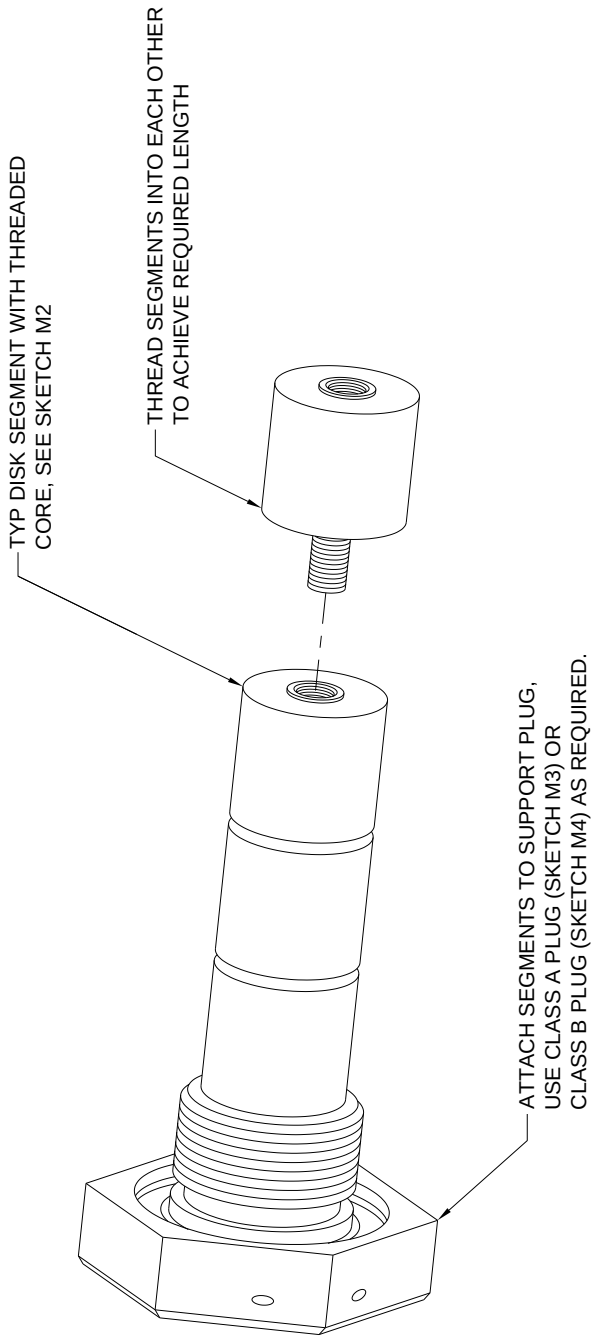

SKETCH M: SEGMENTED DISK ASSEMBLY ANODE (INTERLOCKING CORES), TYPE LDM

1. MUST BE LOW VOLTAGE ALLOY ONLY. LENGTH SHALL BE ADJUSTED TO PROVIDE EQUIVALENT AMPERE-HOURS TO ZINC ANODE TYPE ZRN SHOWN IN MIL-A-18001K.
2. DISK SEGMENT NOMINAL SIZE SHALL MATCH NOMINAL SIZE OF SUPPORT PLUG USED. SEE SKETCHES M2 - M4.

FIGURE A-44. Aluminum, segmented disk assembly anode (interlocking cores) type LDM.

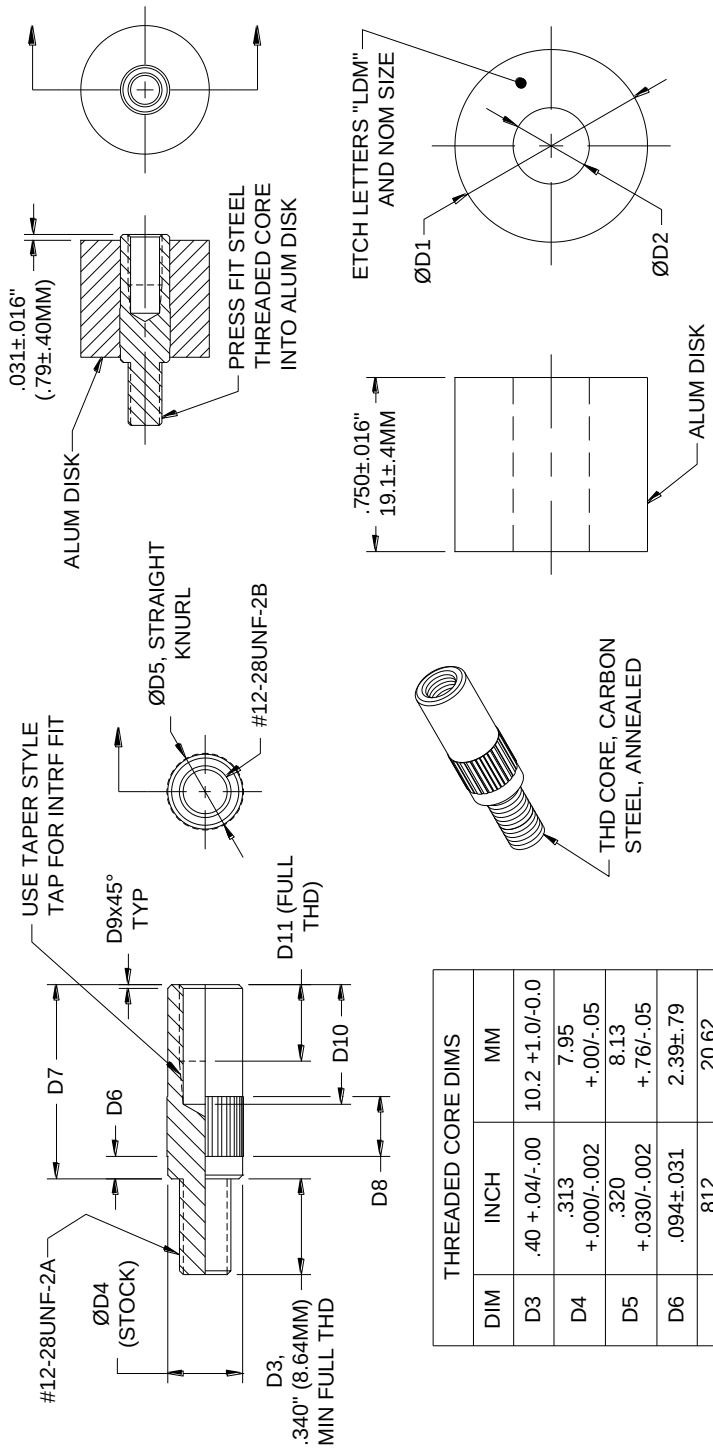

THREADED CORE DIMS		
DIM	INCH	MM
D3	.40 +.04/-.00	10.2 +1.0/-0.0
D4	.313 +.000/-.002	7.95 +.00/-.05
D5	.320 +.030/-.002	8.13 +.76/-.05
D6	.094±.031	2.39±.79
D7	.812 +.005/-.000	20.62 +.13/-.00
D8	.25±.06	6.4±1.5
D9	.016±.004	.40±.10
D10	.50 +.12/-.00	12.7 +3.0/-0.0
D11	0.32 +.00/-.03	8.1 +.0/-.8

THREADED CORE DIMS						
PLUG NOM PIPE SIZE	D1 (INCH)	D1 (MM)	D2 (INCH)	D2 (MM)	QTY PER PKG	PKG WT (LBS)	PKG WT (KG)
1	1.050 ±.016	26.67 ±.40	.313 +.002/-.000	7.95 +.05/-.00	50	3.8	1.7
3/4	.825 ±.016	20.96 ±.40	.313 +.002/-.000	7.95 +.05/-.00	100	5.1	2.3
1/2	.625 ±.016	15.88 ±.40	.313 +.002/-.000	7.95 +.05/-.00	200	6.9	3.1
3/8	.500 ±.016	12.70 ±.40	.313 +.002/-.000	7.95 +.05/-.00	200	5.2	2.4

SKETCH M2: SEGMENTED DISK
(INTERLOCKING THREADED CORE), TYPE LDM
MUST BE LOW VOLTAGE ALLOY ONLY
SURFACE FINISH IS 125 RA MICRO-INCH (3.2 MICRO-METER).

FIGURE A-45. Aluminum, segmented disk (interlocking threaded core) type LDM.

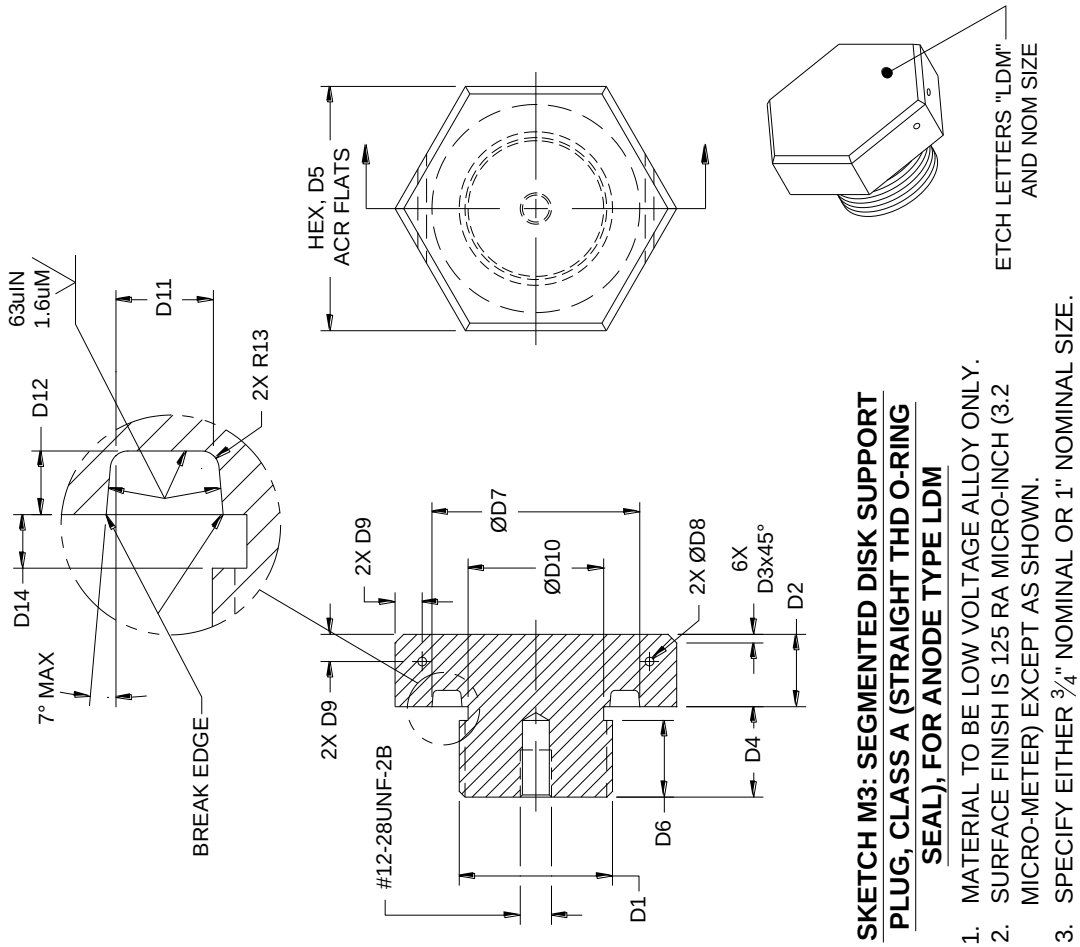

CLASS A PLUG DIMENSIONS

DIM	NOM ¾" (INCH)	NOM ¾" (MM)	NOM 1" (INCH)	NOM 1" (MM)
D1	1 1/16"-12UN-2A	1 1/16"-12UN-2A	1 5/16"-12UN-2A	1 5/16"-12UN-2A
D2	.500±.016	12.7±.4	.500±.016	12.7±.4
D3	.06±.02	1.5±.5	.06±.02	1.5±.5
D4	.625 ±.016	15.87 ±.40	.875 ±.016	22.22 ±.40
D5	1.688 ±.016	42.9 ±.40	1.938 ±.016	49.21 ±.40
D6	53±.03	13 5±.8	.53±.03	13.5±.8
D7	1.438 ±.016	36.53 ±.40	1.688 ±.016	42.88 ±.40
D8	.06 +.03/-.00	1.5 +.8/-.0	.06 +.03/-.00	1.5 +.8/-.0
D9	.188 ±.016	4.78 ±.40	.188 ±.016	4.78 ±.40
D10	.938 ±.016	23.83 ±.40	1.188 ±.016	30.18 ±.40
D11	.188 ±.016	4.78 ±.40	.188 ±.016	4.78 ±.40
D12	.113 +.000/-.005	2.87 +.00/-.12	.113 +.000/-.005	2.87 +.00/-.12
R13	.031 ±.016	.79±.40	.031 ±.016	.79±.40
D14	.125 ±.016	3.18 ±.40	.125 ±.016	3.18 ±.40

FIGURE A-46. Aluminum, segmented disk support plug, class A (straight thread O-ring seal) type LDM.

CLASS B PLUG DIMENSIONS

NOM PIPE SIZE, (UNITS)	D1	D2	D3	D4	D5	D6	D7
NOM SIZE 1 (INCH)	1"-11½NPT	1.315±.003	.500	.063	1.500	.188	.53±.03
NOM SIZE 1 (MM)	1"-11½NPT	33.40±.08	12.7	1.60	38.10	4.78	13.5±.8
NOM SIZE ¾ (INCH)	¾"-14NPT	1.050±.003	.375	.063	1.250	.188	.53±.03
NOM SIZE ¾ (MM)	¾"-14NPT	26.67±.08	9.53	1.60	31.75	4.78	13.5±.8
NOM SIZE ½ (INCH)	½"-14NPT	.840±.003	.375	.063	1.000	.125	.53±.03
NOM SIZE ½ (MM)	½"-14NPT	21.34±.08	9.53	1.60	25.40	3.18	13.5±.8
NOM SIZE ⅜ (INCH)	⅜"-18NPT	.675±.003	.313	.063	.750	.125	.53±.03
NOM SIZE ⅜ (MM)	⅜"-18NPT	17.15±.08	7.95	1.60	19.05	3.18	13.5±.8

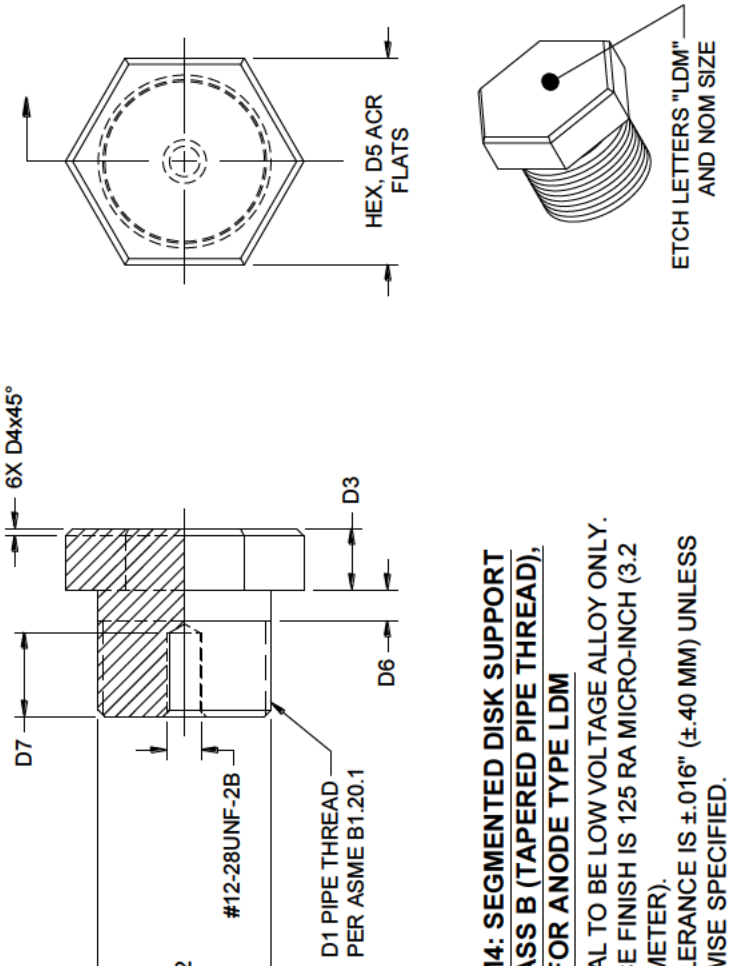

SKETCH M4: SEGMENTED DISK SUPPORT PLUG, CLASS B (TAPERED PIPE THREAD), FOR ANODE TYPE LDM

1. MATERIAL TO BE LOW VOLTAGE ALLOY ONLY.
2. SURFACE FINISH IS 125 RA MICRO-INCH (3.2 MICRO-METER).
3. STD TOLERANCE IS ±.016" (±.40 MM) UNLESS OTHERWISE SPECIFIED.

FIGURE A-47. Aluminum, segmented disk support plug, class B (tapered pipe thread) type LDM.

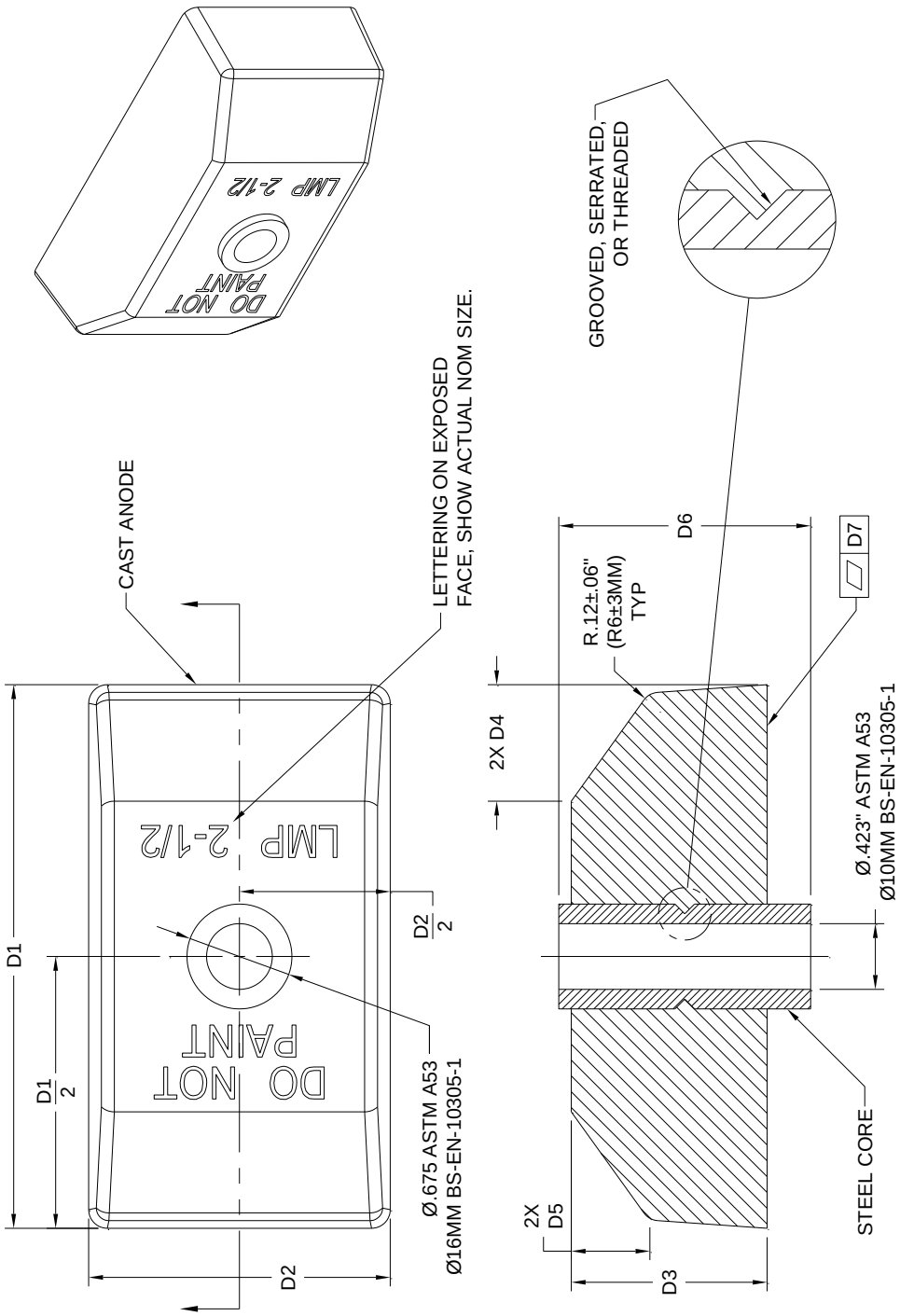

SKETCH N1: MOORING CHAIN ANODES
(PIPE CORE) TYPE LMP

1. THIS LOW VOLTAGE ANODE SHALL BE USED IN APPLICATIONS WHERE EQUIVALENT AMPERE-HOUR OF CORRESPONDING ZINC ANODE ZMP (PER MIL-A-18001K) IS REQUIRED.
2. SEE DIMENSIONS ON SKETCH N2.

FIGURE A-48. Aluminum, mooring chain anodes (pipe core) type LMP.

MOORING CHAIN ANODE DIMENSIONS

Nom chain size	D1 (inch) ±0.12	D1 (mm) ±3.0	D2 (inch) ±0.06	D2 (mm) ±1.5	D3 (inch) +0.0/ -0.12	D3 (mm) +0.0/-3.0	D4 (inch) ±0.06	D4 (mm) ±1.5	D5 (inch) ±0.06	D5 (mm) ±1.5	D6 (inch) +0.06/ -0.0	D6 (mm) +1.5/-0.0	D7 (inch)	D7 (mm)	Approx. wt. (lb)	Approx wt. (kg)
1¼	2.50	63.5	1.19	30.2	0.52	13.2	0.50	12.7	0.12	3.0	0.70	17.8	0.06	1.5	0.16	0.073
1¾	3.24	82.3	1.50	38.1	0.95	24.1	0.62	15.7	0.38	9.7	1.13	28.7	0.06	1.5	0.43	0.20
2	3.50	88.9	1.62	41.1	1.17	29.7	0.75	19.1	0.37	9.4	1.35	34.3	0.06	1.5	0.61	0.28
2¼	3.50	88.9	1.75	44.5	1.09	27.7	0.75	19.1	0.37	9.4	1.45	36.9	0.09	2.3	0.62	0.28
2½	3.50	88.9	1.94	49.3	1.26	32.0	0.75	19.1	0.50	12.7	1.62	41.2	0.09	2.3	0.78	0.35
2¾	4.00	101.6	2.06	52.3	1.51	38.3	1.00	25.4	0.50	12.7	1.91	48.5	0.09	2.3	1.11	0.50
3	5.00	127	2.25	57.2	1.51	38.3	1.25	31.8	0.50	12.7	1.91	48.5	0.12	3.0	1.34	0.61
3½	5.50	139.7	2.38	60.5	1.70	43.3	1.75	44.5	0.50	12.7	2.14	54.4	0.12	3.0	1.92	0.87
4	6.00	152.4	2.69	68.3	1.72	43.6	2.00	50.8	0.50	12.7	2.28	57.9	0.12	3.0	2.40	1.09

Sketch N2: Mooring chain anodes (pipe core) Type LMP

1. See anode views on sketch N1

FIGURE A-48. Aluminum, mooring chain anodes (pipe core) type LMP - Continued.

Preparing activity:
Navy – SH
(Project 3426-2014-002)

NOTE: The activities listed above were interested in this document as of the date of this document. Since organizations and responsibilities can change, you should verify the currency of the information above using the ASSIST Online database at https://assist.dla.mil.