INCH-POUND

MIL-DTL-24646B
29 April 2008
SUPERSEDING
MIL-DTL-24646A
26 February 2001

DETAIL SPECIFICATION

FUSE BOXES, GENERAL SPECIFICATION FOR

This specification is approved for use by all Departments and Agencies of the Department of Defense.

1. SCOPE

1.1 Scope. This specification covers the general requirements for fuse boxes with or without switches used on Naval ships.

1.2 Part or Identifying Number (PIN). The PIN will consist of the following:

M24646/1-	001
Designator and specification sheet number	Dash number (see 3.1)

2. APPLICABLE DOCUMENTS

2.1 General. The documents listed in this section are specified in sections 3, 4 or 5 of this specification. This section does not include documents cited in other sections of this specification or recommended for additional information or as examples. While every effort has been made to ensure the completeness of this list, document users are cautioned that they must meet all specified requirements of documents cited in sections 3, 4 or 5 of this specification, whether or not they are listed.

2.2 Government documents.

2.2.1 Specifications, standards, and handbooks. The following specifications, standards, and handbooks form a part of this document to the extent specified herein. Unless otherwise specified, the issues of these documents are those cited in the solicitation or contract (see 6.2).

FEDERAL SPECIFICATIONS

QQ-B-654	-	Brazing Alloys, Silver.
QQ-N-281	-	Nickel-Copper Alloy Bar, Rod, Plate, Sheet, Strip, Wire, Forgings, and Structural and Special Shaped Sections.

Comments, suggestions, or questions on this document should be addressed to: Defense Supply Center, Columbus, ATTN: DSCC-VAT, Post Office Box 3990, Columbus, Ohio 43218-3990 or by email CircuitProtect@dla.mil. Since contact information can change, you may want to verify the currency of this address information using the ASSIST Online database at http://assist.daps.dla.mil.

FEDERAL STANDARDS

FED-STD-28	-	Screw - Thread Standards for Federal Services.
FED-STD-28/2	-	Screw - Thread Standards for Federal Services, Section 2, Unified Inch Screw Threads - UN and UNR Thread Forms.

COMMERCIAL ITEM DESCRIPTIONS

A-A-59142	-	Rosins: Gum, Wood, and Tall Oil.

DEPARTMENT OF DEFENSE SPECIFICATIONS

MIL-S-901	-	Shock Tests, H.I. (High-Impact); Shipboard Machinery, Equipment, and Systems, Requirements for.
MIL-E-917	-	Electric Power Equipment, Basic Requirements.
MIL-E-2036	-	Enclosures for Electric and Electronic Equipment.
MIL-DTL-15024	-	Plates, Tags, and Bonds for Identification of Equipment, General Specification for.
MIL-P-15024/5	-	Plates, Identification.
MIL-PRF-15160	-	Fuses: Instrument, Power, and Telephone, General Specification for.
MIL-DTL-15291	-	Switches, Rotary, Snap Action and Detent/Spring Return Action, General Specification for.
MIL-I-24768/1	-	Insulation, Plastic, Laminated Thermosetting, Glass-Cloth Melamine-Resin (GME).

DEPARTMENT OF DEFENSE STANDARDS

MIL-STD-108	-	Definitions of and Basic Requirements for Enclosures for Electric and Electronic Equipment.
MIL-STD-167-1	-	Mechanical Vibrations of Shipboard Equipment (Type I - Environmental and Type II - Internally Excited.)
MIL-STD-202	-	Test Method Standard Electronic and Electrical Components Parts.

(Copies of these documents are available online at http://assist.daps.dla.mil/quicksearch/ or http://assist.daps.dla.mil or from the Standardization Document Order Desk, 700 Robbins Avenue, Building 4D, Philadelphia, PA 19111-5094).

2.2.2 Other Government documents, drawings, and publications. The following other Government documents, drawings, and publications form a part of this document to the extent specified herein. Unless otherwise specified, the issues are those cited in the solicitation or contract).

NAVAL SEA SYSTEMS COMMAND (Ship Systems)

NAVSHIPS 9000-S6202-73055	-	Fabricated Terminals (Closed End) and Branch Buses for Electrical Fittings.
NAVSHIPS 9000-S6202-73246	-	Fabricated Terminals (Closed End) and Main Buses for Electrical Fittings.

(Copies of these documents are available from http://www.navsea.navy.mil, or the Commander Naval Sea Systems Command, SEA 05M2, 1333 Isaac Hull Avenue SE Stop 5160, Washington Navy Yard DC 20376-5160).

2.3 Non-Government publications. The following documents form a part of this document to the extent specified herein. Unless otherwise specified, the issues of these documents are those cited in the solicitation or contract. (see 6.2).

AMERICAN SOCIETY OF MECHANICAL ENGINEERS (AMSE)

ASME B46.1	-	Surface Texture (Surface Roughness, Waviness, and Lay).

(Copies of these documents may be obtained from http://www.asme.org/ or ASME International, Three Park Avenue, New York, NY 10016-5990, 800-843-2763 (U.S/Canada), 001-800-843-2763 (Mexico), 973-882-1170 (outside North America), Email: infocentral@asme.org).

AMERICAN SOCIETY FOR TESTING AND MATERIALS (ASTM)

ASTM A342/A342M	-	Standard Test Methods for Permeability of Feebly Magnetic Materials.
ASTM B16/B16M	-	Rod, Brass, Free-Cutting, Bar and Shapes for use in Screw Machines.
ASTM B36/B36M	-	Plate, Brass, Sheet, Strip and Rolled Bar.
ASTM B584	-	Castings, Copper Alloy Sand, for General Applications.
ASTM B633	-	Electrodeposited Coating of Zinc on Iron and Steel, Standard Specification for.
ASTM D4066	-	Nylon Injection and Extrusion Materials (PA).

(Copies of this document are available from http://www.astm.org or the American Society for Testing Materials, 100 Barr Harbor Drive, West Conshohocken. PA 19428-2959).

2.4 Order of precedence. In the event of a conflict between the text of this document and the references cited herein (except for related specification sheets), the text of this document takes precedence. Nothing in this document, however, supersedes applicable laws and regulations unless a specific exemption has been obtained.

3. REQUIREMENTS

3.1 Specification sheets. The individual item requirements shall be as specified herein and in accordance with the applicable specification sheet. In the event of any conflict between requirements of this specification and the specification sheet, the latter shall govern.

3.2 First article. When specified, a sample shall be subjected to first article inspection (see 4.3 and 6.3).

3.3 Materials. Materials shall be as specified (see 3.1). When not specified, the contractor may select any material that will perform the intended function in the equipment and will otherwise comply with the requirements of this specification.

3.3.1 Metals. Metals shall be of a corrosion-resistant type or shall be treated to resist corrosion as specified in MIL-E-917. Dissimilar metals, in contact with each other, shall be selected as specified in MIL-E-917. The selection of metals in contact shall also be such as to prevent galling.

3.3.1.1 Nonmagnetic materials. When specified (see 3.1), all parts for nonmagnetic fuse boxes shall be of a nonferrous material or a material generally considered nonmagnetic. The magnetic permeability shall be not greater than 2.0 after fabrication (see 4.6.10).

3.3.2 Brazing alloys. Brazing alloys for electrical connections shall be silver alloy type as specified in class BAg of QQ-B-654.

3.3.3 Nonmetallic materials. Nonmetallic materials shall be nonflammable, nontoxic, and fungus-inert as specified in MIL-E-917.

3.3.3.1 Polyamide (nylon)parts. Molded polyamide (nylon) parts shall be in accordance with ASTM D4066 Group 1, Class 8, Grade 1.

3.3.4 Prohibited materials. Prohibited materials shall be as specified in MIL-E-917 with the following additions:

a. Asbestos.

b. Cadmium.

c. Mercury (see 3.3.4.1).

3.3.4.1 Mercury. In addition to the mercury requirement as specified in MIL-E-917, no parts shall have come in direct contact with metallic mercury, mercury compounds, or mercury bearing instruments or devices, employing only a single boundary of containment, during manufacture or inspection. (A single boundary of containment is one which is not backed up by a second seal or barrier to prevent escape and consequent mercury contamination in the event of rupture of the primary seal or barrier.)

3.3.5 Recycled, recovered, or environmentally preferable materials. Recycled, recovered, or environmentally preferable materials should be used to the maximum extent possible provided that the material meets or exceeds the operational and maintenance requirements, and promotes economically advantageous life cycle costs.

3.4 Parts.

3.4.1 Fuse clips. Fuse clips shall be as specified (see 3.1). Fuse clip retainers shall not be used with fuse clips for fuses rated 0-60 amperes (A). The clip shall be secured to the branch bus to allow easy removal without requiring disassembly of other parts and will withstand a pull-force as specified in 4.6.1.

3.4.2 Fuse base. The fuse base shall be of glass melamine, as specified in type GME of MIL-I-24768/1, or shall be a material selected from the laminates as specified in MIL-E-917, provided they meet the electrical and mechanical requirements (see 3.1). The laminate shall be furnished in natural color except polyester laminates may be furnished in tan or red. Current carrying parts (less switches) shall be mounted on the fuse base. Unless otherwise specified (see 3.1), the fuse base shall be mounted in the approximate center of the enclosure.

3.4.3 Bus bars and connections. Bus bars and connections shall be brass, as specified in ASTM B16/B16M, ASTM B36/36M, and ASTM B584.

3.4.3.1 Main bus bars. Main bus bars shall be of the sizes as specified (see 3.1). Holes in the bus bars may be punched or drilled and the contact area shall be smooth. Where punching is used, the operation shall not appreciably indent the surface of the bus bar in the vicinity of the hole.

3.4.3.2 Branch bus bars. Unless otherwise specified, branch bus bars shall be of the sizes as specified in Drawing 9000-S6202-73055 and shall be selected for the application specified (see 3.1).

3.4.3.3 Main and branch terminals. Unless otherwise specified (see 3.1), main and branch terminals shall be as specified in Drawings 9000-S6202-73055 and 9000-S6202-73246 and shall be selected for the applicable wire size specified (see 3.1). Terminals shall be silver brazed to the bus bars.

3.4.3.4 Studs and stud type main cable terminals. Unless otherwise specified (see 3.1), studs and stud type main cable terminals shall be as specified in Drawing 9000-S6202-73055 and shall be through bolted at the main bus bar. The nuts shall be torqued to 6.5 ± .5 foot-pounds and tack welded by gas tungsten arc welding as specified in commercial procedures using CU-SN-C wire with 0.035 inch diameter. Only two tack welds shall be applied, one opposite the other at the junction of the nut flats and the main bus. One tack weld shall be applied to all nuts before the second tack weld is applied. All nuts shall be of brass. Self locking brass nuts may be used in lieu of nuts requiring tack welding at the option of the contractor. The stud or main cable terminal may be ground smooth at the nut to meet electrical clearance requirements. Stud connections to the branch buses shall be as specified in Drawing 9000-S6202-73055. Stud connections shall be silver brazed to the branch and feeder bus bars.

3.4.3.5 Switch terminal connector. The terminal connector between the branch bus and switch shall be sized and formed as shown (see 3.1).

3.4.4 Switches. Where required (see 3.1), switches shall be as specified in MIL-DTL-15291. Switch type shall be as specified (see 3.1).

3.4.4.1 Handles. Switch handles shall be brass, as specified in ASTM B584, or molded polyamide (nylon) and shall be as shown on figure 1. Handles shall be secured to the shaft extension by the use of corrosion resistant steel (CRES) setscrews, commercial grade.

3.4.4.2 Shaft extensions and coupling plates. Switch shaft extensions and coupling plates shall be zinc plated steel, CRES commercial grade, or nickel copper alloy as specified in QQ-N-281. For submersible fuse panels, the shaft shall be CRES or nickel-copper alloy per QQ-N-281. Cups shall be brass and coupling plates shall be brass or CRES. Molded polyamide (nylon) may be used for shaft extensions, cups and coupling plates at the option of the contractor. The shaft extension shall, regardless of manufacturer, mate with and be compatible with the switch handle shown on figure 1. The coupling plates may be as shown on figure 1 or may be contractor's choice, providing they meet the requirements specified herein. Pins shall be of austenitic CRES commercial grade, or nickel-copper alloy as specified in QQ-N-281.

3.4.5 Commercial (hardware) parts. Commercial utility hardware items such as screws, bolts, and nuts may be used, provided they possess properties equivalent to and are replaceable by MS or AN part numbers.

3.4.6 Mounting parts. Unless otherwise specified (see 3.1), mounting parts, such as brackets, straps, angles, and pads shall be of the same material as the enclosure.

3.5. Design and construction. Fuse boxes shall be of the design, construction, and physical dimensions as specified (see 3.1). Fuses and wiring shall not be furnished.

3.5.1 Enclosures. Enclosures shall be of the material specified and shall be submersible (15-foot), watertight, or totally enclosed as specified (see 3.1).

3.5.1.1 Wiring diagram. The wiring diagram (see 3.1), shall be as specified in MIL-E-2036 except the plastic protective material shall be a clear plastic laminating film, 10-mils minimum thickness, of polycarbonate, polyester (PET), polypropylene, or other suitable commercial grade plastic, which is tough, rigid and chemically resistant.

3.5.1.2 Cable entrance. Unless otherwise specified (see 6.2), holes for stuffing tubes or cable connectors shall not be provided.

3.5.1.3 Stuffing tubes. Unless otherwise specified (see 6.2), stuffing tubes shall not be furnished.

3.5.1.4 Mounting. The location of mounting holes shall be as specified (see 3.1). The enclosure shall support the total assembly of the box, fuses, switches, where required, and associated hardware by the mounting means specified. Mounting bolts shall not be furnished.

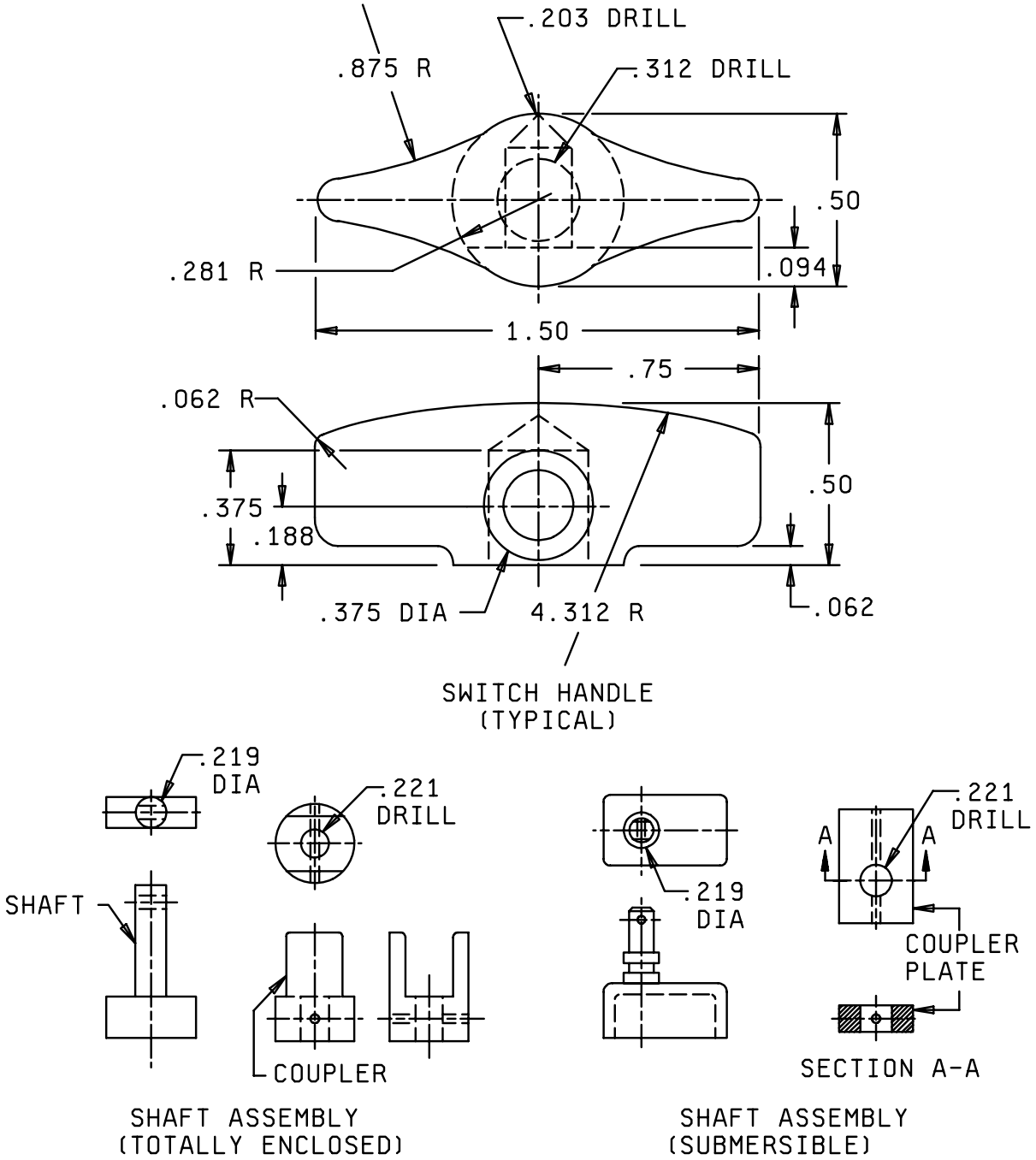

FIGURE 1. Switch handle and shaft linkage.

3.5.2 Threaded parts and fastening devices. Threaded parts and fastening devices shall be as specified in MIL-E-917 with the exceptions specified in 3.5.2.1 and 3.5.2.2.

3.5.2.1 Screw threads. Screw threads shall be as specified in FED-STD-28. Unless otherwise specified (see 3.1), screw threads shall be right-hand, coarse-thread series, unified form, class 2A or 2B as specified in FED-STD-28/2.

3.5.2.2 Thread locking at electrical connections. Thread locking at electrical connections shall be as follows:

a. Lockwashers need not be used to lock the nuts at the main bus nor the nuts at the fuse clips, providing none of the nuts become loosened during the vibration and shock tests (see 4.6.8 and 4.6.9).

b. Unless otherwise furnished with the switch, lockwashers need not be used with the screw at the switch terminal.

3.5.3 Welding and brazing. Welding and brazing of nonelectrical parts shall be in accordance with commercial practices and shall meet the requirements specified herein.

3.5.3.1 Brazing. Parts or components shall be fastened by intermittent localized brazing in such a manner as to ensure that each enclosure assembly will not be completely soft-annealed and will not distort or leak when subjected to the shock tests (see 4.6.9).

3.5.4 Stress relief. Metals used in the fuse box assemblies shall be treated or heat treated to prevent deterioration or failure due to stresses or other conditions resulting from working, forming, and similar processes during fabrication.

3.5.5 Drilling, countersinking, and tapping. Drilling, countersinking, and tapping shall be done before painting or finish is applied.

3.5.6 Sealing counterbored holes. Counterbored holes in the bottom of the fuse base shall be filled with type I, grade D rosin or sealing wax as specified in A-A-59142 after screws are in place.

3.5.7 Component spacing and arrangement. Unless otherwise specified (see 3.1), component spacing and arrangement within the boxes shall be as follows:

a. Current carrying parts shall be so arranged as to avoid overheating due to inductive effects.

b. Terminals shall be offset to facilitate wiring. In a box having three main terminals, the holes in the two outer terminals shall be angled in towards the center terminal between 15 degrees and 30 degrees. In a box having two main terminals, the holes in each shall be angled in towards the other between 15 degrees and 30 degrees. The holes in the branch terminals shall be offset approximately 30 degrees in the same direction as specified in Drawing 9000-S6202-73055.

c. Fuse clips shall be aligned so as not to apply stresses to fuses.

3.5.8 Electrical creepage and clearance distances. Unless an insulating barrier is used, electrical creepage and clearance distances shall be as specified in MIL-E-917.

3.5.8.1 Insulating barriers. Insulating barriers shall be of the same materials as the base and shall be a minimum of .125 inch (3.17 mm) thick when there is a possibility of impact or abrasion to the material resulting from shock or vibration, otherwise it can be .062 inch (1.57 mm) thick. Barriers for branch buses shall be force-fit and cemented in a slot cut into the base. The cement shall be commercial grade and shall be such as to prevent the barriers from becoming loosened during the shock and vibration tests (see 4.6.9 and 4.6.8). Barriers (sub bases) for main buses shall be secured by through bolting with the same studs holding the main buses.

3.5.9 Polarity and phase identification.

3.5.9.1 Polarity. For direct current (dc), like polarities shall be similarly disposed. Facing the box, the top bus shall be positive (+); the center bus, where furnished, shall be positive and negative (±) (to indicate the voltage is at some value in between + and -); and the bottom bus shall be negative (-). Should bus bars be vertical, the marking shall be as specified, when the fuse box is rotated 90 degrees counterclockwise. Polarity identification shall be clearly marked (see 3.8.3).

3.5.9.2 Phase sequence. For alternating current (ac), like phases shall be similarly disposed. Facing the front of the panel, the phase rotation shall be C, B, and A respectively, from left to right or bottom to top. Phase identification shall be clearly marked (see 3.8.3).

3.6 Performance characteristics.

3.6.1 Dielectric withstanding voltage. Fuse boxes shall exhibit no evidence of arcing (other than at test probes), corona (visible, audible, or smell), flashover or punctured insulation when tested as specified in 4.6.2

3.6.2 Insulation resistance. The insulation resistance of the electrical circuits shall be not less than 10 megohms when tested as specified in 4.6.3

3.6.3 Operation. When operated at rated load (see 3.1), the circuits shall be energized as specified on the wiring diagram (see 4.6.4). Where switches are installed, they shall be operated through all positions to ensure there is no mechanical binding and that they make and break the circuits.

3.6.4 Temperature rise. When fuse boxes are subjected to the tests as specified in 4.6.5, the temperature rise in current carrying parts such as bus bar connections, terminals, and fuse clips, shall not exceed 70°C above an ambient room temperature of 25°C. Also, the enclosure interior ambient temperature shall not exceed 65°C and the temperature rise at the switch terminals (where applicable) shall not exceed 50°C.

3.6.5 Salt atmosphere. When fuse boxes are tested as specified in 4.6.6, there shall be no evidence of excessive corrosion. Excessive corrosion is defined as that which interferes with the electrical or mechanical performance, or, in the case of plated metals, corrosion which has migrated through the plating and attacked the base metal. Where corrosion-resistance treatments are used, limited superficial corrosion such as would result from scratches will be permissible.

3.6.6 Level of effectiveness of enclosure. The fuse boxes shall meet the specific degree of enclosure requirements specified (see 3.1) when tested as specified in 4.6.7. Following the test, the fuse boxes shall pass the dielectric withstanding voltage test (see 4.6.2).

3.6.7 Vibration. When fuse boxes are tested as specified in 4.6.8, the branch circuits shall remain energized and there shall be no electrical or mechanical damage, nor shall any screws or nuts become loosened. Where switches are present, there shall be no momentary opening or transfer of switch contacts during the test.

3.6.8 Shock. The branch circuits shall remain energized during and after the shock test as specified in 4.6.9 and no portion of the equipment shall come adrift or otherwise create a hazard to personnel or other components nor shall any screws or nuts become loosened. Where switches are present, there shall be no momentary opening or transfer of the switch contacts. Following the test, the fuse boxes shall pass the level effectiveness of enclosure and dielectric withstanding voltage tests (see 4.6.7 and 4.6.2).

3.7 Finish.

3.7.1 Surface finish. Surface finishes shall be as specified in ASME B46.1.

3.7.2 Zinc coating. Zinc coating, where required (see 3.1), shall be as specified in ASTM B633.

3.7.3 Painting. Unless otherwise specified (see 6.2), steel and aluminum enclosures shall be painted and brass enclosures shall be neither primed nor painted. Pre-treating, painting and finishing shall be per MIL-E-917.

3.8 Marking.

3.8.1 Information and identification plates. Information and identification plates shall be attached to the box cover by means of screws in tapped holes or screws held by pads brazed to the back of the cover. Unless otherwise specified (see 3.1), plates for steel and brass boxes shall be brass; plates for aluminum shall be CRES types A, B, or C as specified in MIL-DTL-15024 and normal service of MIL-P-15024/5. Plate size shall be compatible with the amount of information required and shall be standard dimensions as specified in MIL-DTL-15024 and MIL-P-15024/5.

3.8.1.1 Manufacturer's identification plate. The manufacturer's identification plate shall contain, as a minimum, the following information:

a. Military Part or Identifying Number (PIN) (for example M24646/1-001).

b. Symbol number (see 3.1).

c. Prime manufacturer's name, trademark or CAGE code.

d. National stock number (NSN), if assigned.

On totally enclosed boxes (see 3.1), the plate shall be approximately centered in the upper or lower part of the cover with the upper part preferred. On submersible and watertight boxes, the plate shall be on the outermost portion of the cover (outside the seal). The exact location and size shall be the contractor's choice and shall be positioned such as not to interfere with the placement of the information plate.

3.8.1.2 Information plates. Information plates shall be furnished for each set of fuses. Unless otherwise specified (see 6.2), information plates shall be furnished blank. Information plates for all totally enclosed and watertight boxes shall be positioned directly over the circuit identified. Information plates for submersible boxes shall be positioned on the outermost portion of the cover (outside the seal) adjacent to the circuit identified. For fused boxes with switches, the “OFF” position of each switch shall be indicated by stamping the cover or by welding or brazing an information plate of the same material as the cover.

3.8.2 Caution and warning plates. When specified, caution and warning plates shall be as specified (see 3.1).

3.8.3 Polarity or phase marking. The base shall be clearly marked adjacent to each terminal and fused branch circuit with the polarity (+ and - signs) or phase sequence (C, B, A, or AC, AB, and BC). Marking shall be permanent and legible and shall be white paint applied by stenciling or silk screening or rubber stamping with white smudge proof ink covered with a clear lacquer of commercial grade or engraved.

3.9. Workmanship The fuse boxes, including all parts and accessories, shall be constructed and finished in a careful and workmanlike manner in accordance with good design and sound practice. Joined parts shall fit as tightly as expected with good manufacturing practice and workmanship. The fuse boxes shall be free of cracked or displaced parts, burrs, and other defects which will affect the life, serviceability, or appearance.

4. VERIFICATION

4.1 Classification of inspections. The inspection requirements specified herein are classified as follows:

a. First article inspection (see 4.3).

b. Conformance inspection (see 4.4).

4.2 Inspection conditions. Unless otherwise specified herein, all inspections shall be performed in accordance with MIL-STD-202.

4.2.1 Preparation of inspection. Fuses of the amperages specified, shall be as specified in MIL-PRF-15160 and shall be installed during operational and electrical tests as specified (see 3.1).

4.3 First article inspection. First article inspection shall be performed on sample units which have been produced with equipment and procedures normally used in production. The manufacturer shall provide verification to the procuring activity that the first article inspection has been performed on the samples supplied to the requirements of this specification. Acceptance will be allowed for all fuse and fused distribution box sizes of the category submitted (see 4.3.1) up to and including the maximum size tested and accepted. Fuse box sizes will be determined by the number of circuits in the box.

4.3.1 Sample size. One fuse box of each symbol number (covered by a single specification sheet (see 3.1)) shall be subjected to first article inspection.

4.3.2 Inspection routine. The sample shall be subjected to the inspections as specified in table I.

4.3.3 Failure. One or more failures of first article examination or tests shall be cause for rejection.

TABLE I. First article inspection.

Inspection	Requirement paragraph	Test paragraph
Visual and dimensional examination	3.1, 3.3, 3.4, 3.5, 3.7, 3.8 and 3.9	4.5.1
Pull-test	3.4.1	4.6.1
Dielectric withstanding voltage	3.6.1	4.6.2
Insulation resistance	3.6.2	4.6.3
Operation	3.6.3	4.6.4
Temperature rise	3.6.4	4.6.5
Salt atmosphere	3.6.5	4.6.6
Effectiveness of enclosure	3.6.6	4.6.7
Vibration	3.6.7	4.6.8
Shock	3.6.8	4.6.9
Magnetic permeability (where applicable)	3.3.1.1	4.6.10

4.4 Conformance inspection.

4.4.1 Inspection of product for delivery. Inspection of product for delivery shall consist of group A and group B inspection. Samples shall be randomly selected in accordance with table IV. If one or more defects are found, the lot shall be rescreened and defects removed. A new sample of parts shall be randomly selected in accordance with table IV. If one or more defects are found in the second sample, the lot shall be rejected and shall not be supplied to this specification.

4.4.1.1 Inspection lot. An inspection lot shall consist of fuse boxes of the same category (covered by a single specification sheet (see 3.1)), produced under essentially the same conditions, and offered for inspection at one time.

4.4.2 Group A inspection. Group A inspection shall consist of the inspections as specified in table II.

TABLE II. Group A inspection.

Inspection	Requirement paragraph	Test paragraph
Visual and dimensional examination	3.1, 3.3, 3.4, 3.5, 3.7, 3.8, and 3.9	4.5.1
Dielectric withstanding voltage	3.6.1	4.6.2
Insulation resistance	3.6.2	4.6.3

4.4.3 Group B inspection. Group B inspection shall consist of the inspections as specified in table III, in the order shown with samples selected from inspection lots that have passed group A inspection.

TABLE III. Group B inspection.

Inspection	Requirement paragraph	Test paragraph
Effectiveness of enclosure	3.6.6	4.6.7
Magnetic permeability (where applicable)	3.3.1.1	4.6.10
Operation	3.6.3	4.6.4

TABLE IV. Group A and Group B, zero defect sampling plan.

Lot Size	Sample size	
	Group A	Group B
1 to 8	All	3
9 to 25	8	3
26 to 50	8	5
51 to 90	8	6
91 to 150	12	7
151 to 280	19	10
281 to 500	21	11
501 to 1,200	27	15
1,201 to 3,200	35	18
3,201 to 10,000	38	22
10,001 to 35,000	46	29
35,001 to 150,000	56	29
150,001 and over	64	29

4.5 Methods of examination and test.

4.5.1 Visual and dimensional examination. Fuse boxes shall be visually examined to verify that the materials, design, construction, physical dimensions, marking, and workmanship are as specified in the applicable requirements (see 3.1, 3.3, 3.4, 3.5, 3.7, 3.8, and 3.9).

4.6 Tests.

4.6.1 Pull-test. A force of 20 pounds shall be applied to each fuse clip for a period of 5 to 10 seconds. The force applied shall consist of a direct axial pull. Any sign of loosening of the clip or distortion or breaking of materials surrounding the clip shall be cause for rejection.

4.6.2 Dielectric withstanding voltage. Fuse boxes shall be subjected to a dielectric withstanding voltage test as specified in method 301 of MIL-STD-202. The following details shall apply:

a. Test voltage: For circuits rated 600 volts (V) or less, twice rated circuit voltage plus 1,000 V; for circuits rated above 600 V, 2.25 times rated voltage plus 2,000 V.

b. Nature of potential: AC (root mean square (rms)).

c. Points of application: Between electrical circuits and ground (enclosure). Where switches are present, they shall be in the energized (closed) position.

d. Rejection criteria: Failure to conform to 3.6.1.

4.6.3 Insulation resistance. Insulation resistance shall be measured as specified in method 302, test condition B of MIL-STD-202. The test voltage shall be applied, between electrical circuits and ground (enclosure). When switches are present, they shall be in the energized (closed) position. A resistance of less than 10 megohm shall be cause for rejection.

4.6.4 Operation. Electrical circuits shall be energized at rated voltage and the voltage at the output circuits shall be measured. When switches are installed, they shall be operated through all positions. Failure of the circuits to function as specified in the wiring diagram or mechanical binding of the switches, where applicable, shall be cause for rejection.

4.6.5 Temperature rise. The fuse boxes shall be energized at rated voltage and current and the temperature of current carrying parts and the enclosures interior ambient temperature recorded when temperature readings have stabilized. Temperature sensitive elements, such as thermocouples of small wire (28-32 AWG), shall be placed on the current carrying parts and suspended approximately one-half inch below the cover. Temperature stabilization shall be considered to have occurred when three successive readings taken at one-half hour intervals are within plus or minus 1°C. Failure to conform to 3.6.4 shall be cause for rejection.

4.6.6 Salt atmosphere. Fuse boxes shall be tested as specified in method 101, test condition A of MIL-STD-202. Evidence of excessive corrosion shall be cause for rejection (see 3.6.5).

4.6.7 Effectiveness of enclosure. Fuse boxes shall be tested as specified in MIL-STD-108, except they shall not be energized. Rejection or acceptance criteria shall be as specified in MIL-STD-108 and 3.6.6.

4.6.8 Vibration. The fuse boxes shall be subjected to the type I vibration test as specified in MIL-STD-167-1. The following details and exceptions shall apply:

a. Frequency: The variable frequency tests shall be omitted.

b. Electrical test conditions: The circuits shall be energized at rated voltage. Test equipment shall be used to monitor the output voltage on fuse boxes.

c. Rejection criteria: Failure to conform to 3.6.7.

4.6.9 Shock. The fuse boxes shall be subjected to the high-impact shock test for grade A, type A, class I equipment as specified in MIL-S-901. The following details shall apply:

a. Electrical test conditions: The circuits shall be energized at rated voltage. Test equipment shall be used to monitor output voltage on fuse boxes.

b. Rejection criteria: Failure to conform to 3.6.8 except fuse failure shall not be cause for rejection.

4.6.10 Magnetic permeability. The relative permeability of the enclosures, less switches, shall be checked using a low-mu indicator as specified in ASTM-A342/A342M and shall have a permeability not greater than 2.0.

5. PACKAGING

5.1 Packaging. For acquisition purposes, the packaging requirements shall be as specified in the contract or order (see 6.2). When packaging of materiel is to be performed by DoD or in-house contractor personnel, these personnel need to contact the responsible packaging activity to ascertain packaging requirements. Packaging requirements are maintained by the Inventory Control Point's packaging activities within the Military Service or Defense Agency, or within the military service's system commands. Packaging data retrieval is available from the managing Military Department's or Defense Agency's automated packaging files, CD-ROM products, or by contacting the responsible packaging activity.

6. NOTES

(This section contains information of a general or explanatory nature that may be helpful, but is not mandatory.)

6.1 Intended use. The fuse boxes are used to distribute electrical power to branch circuits and provide fused protection of the feeder circuit. Boxes with switches provide selective control of power distribution to branch circuits.

6.2 Acquisition requirements. Acquisition documents should specify the following:

a. Title, number, and date of the specification.

b. ASSIST Online database should be cited in the solicitation, and if required, the specific issue of individual documents referenced. If not otherwise specified, the versions of the individual documents referenced will be those in effect on the date of release of the solicitation (see 2.).

c. Packaging requirements (see 5.1).

d. If holes for stuffing tubes or cable connectors are required (see 3.5.1.2).

e. If stuffing tubes are required (see 3.5.1.3).

f. If painting is to be other than specified (see 3.7.3).

g. Marking for circuit information plates, if required (see 3.8.1.2).

h. If special marking is required (see 3.1).

6.3 First article inspection. Invitations for bids should provide that the Government reserves the right to waive the requirement for samples for first article inspections as to those bidders offering a product which has been previously acquired or tested by the Government, and that bidders offering such products, who wish to rely on such production or test, must furnish evidence with the bid that prior Government approval is presently appropriate for the pending contract.

6.4 Sub-contracted material and parts. The preparation for delivery requirements of referenced documents listed in section 2 do not apply when material and parts are acquired by the contractor for incorporation into the equipment and lose their separate identity when the equipment is shipped.

6.5 Symbol number. The symbol number is a standard electrical equipment designation. Symbol numbers are listed in MIL-HDBK-290.

6.6 Environmentally preferable material. Environmentally preferable materials should be used to the maximum extent possible to meet the requirements of this specification. As of the dating of this document, the U.S. Environmentally Protection Agency (EPA) is focusing efforts on reducing 31 priority chemicals. The list of chemicals is available on their website at http://www.epa.gov/epaoswer/hazwaste/minimize/chemlist.htm. Further information is available at the following EPA site: http://www.epa.gov/epaoswer/hazwaste/minimize/. Included in the EPA list of 31 priority chemicals are cadmium, lead, and mercury. Use of the materials on the list should be minimized or eliminated unless needed to meet the requirements specified herein (see Section 3).

6.7 Subject term (key word) listing.

Bus bars
Branch terminals
Main terminals
Stuffing tubes

6.8 Changes from previous issue. The margins of this specification are marked with vertical lines to indicate where changes from the previous issue were made. This was done as a convenience only and the Government assumes no liability whatsoever for any inaccuracies in these notations. Bidders and contractors are cautioned to evaluate the requirements of this document based on the entire content irrespective of the marginal notations and relationship to the last previous issue.

Custodian:
Navy - SH
DLA - CC

Preparing activity:
DLA - CC

(Project 5920-2007-026)

NOTE: the activities listed above were interested in this document as of the date of this document. Since organizations and responsibilities can change, you should verify the currency of the information above using the ASSIST Online database at http://assist.daps.dla.mil.