Downloaded from http://www.everyspec.com

INCH-POUND
MIL-DTL-24630/1B(SH)
17 June 2014
SUPERSEDING
MIL-V-24630/1A(SH)
8 August 1986

DETAIL SPECIFICATION SHEET

VALVES, CHECK, IN-LINE, NON-REVERSIBLE INSTALLATION FOR HYDRAULIC FLUID AND LUBRICATING OIL FLUID

This specification is approved for use by the Naval Sea Systems Command, Department of the Navy, and is available for use by all Departments and Agencies of the Department of Defense.

The requirements for acquiring the product described herein shall consist of this specification sheet and MIL-DTL-24630(SH).

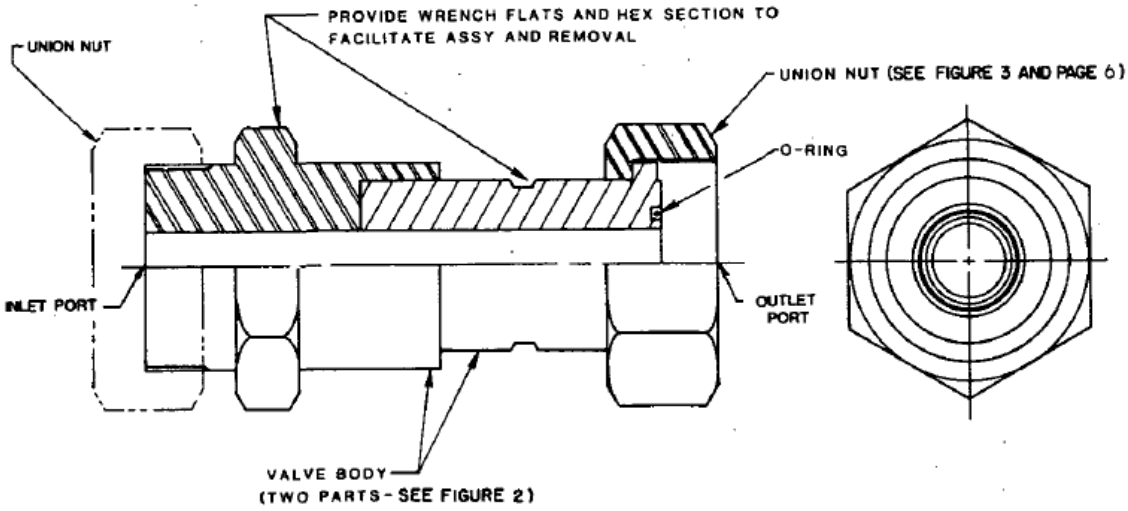

FIGURE 1. Non-reversible in-line check valve.

Downloaded from http://www.everyspec.com

REQUIREMENTS:

Rated flow and pressure drop shall be as shown in table I.

Dimensions are in inches.

Tolerances, unless otherwise specified herein, shall be ±1/64 for fractions and ±0.010 for decimals.

Unless otherwise specified (see 6.2 of MIL-DTL-24630), union nut material shall be nickel aluminum bronze in accordance with either ASTM B150/B150M, C63200 or ASTM B148, C95800.

Part or Identifying Number (PIN). PINs consist of the basic number of this specification sheet and a dash number taken from table I for a valve assembly complete with union nut. For the union nut alone, the part number consists of the basic number of this specification sheet and a dash number from table III.

Examples: M24630/1-08 (complete valve with union nut), M24630/1-08N (union nut only).

TABLE I. Rated flow, pressure drop, and leakage requirements.

Dash no.	NPS [1/]	Rated flow (minimum)		Pressure drop (max rate of flow)		Maximum internal leakage drops/3 minutes
		liters/min	gal/min	lb/in^2	kPa	
04	¼	10	2.6	10	69	2.0
06	⅜	16	4.2	10	69	3.0
08	½	25	6.6	10	69	4.0
12	¾	40	10.6	10	69	5.0
16	1	64	16.9	10	69	6.0
20	1¼	100	26.4	10	69	7.0
24	1½	160	42.3	10	69	8.0
32	2	250	66.0	10	69	9.0
40	2½	400	105.7	10	69	10.0

NOTE:

[1/] Check valve port dimensions are based on schedule 80 pipe. Use in other schedule piping may increase noise characteristic slightly.

Downloaded from http://www.everyspec.com

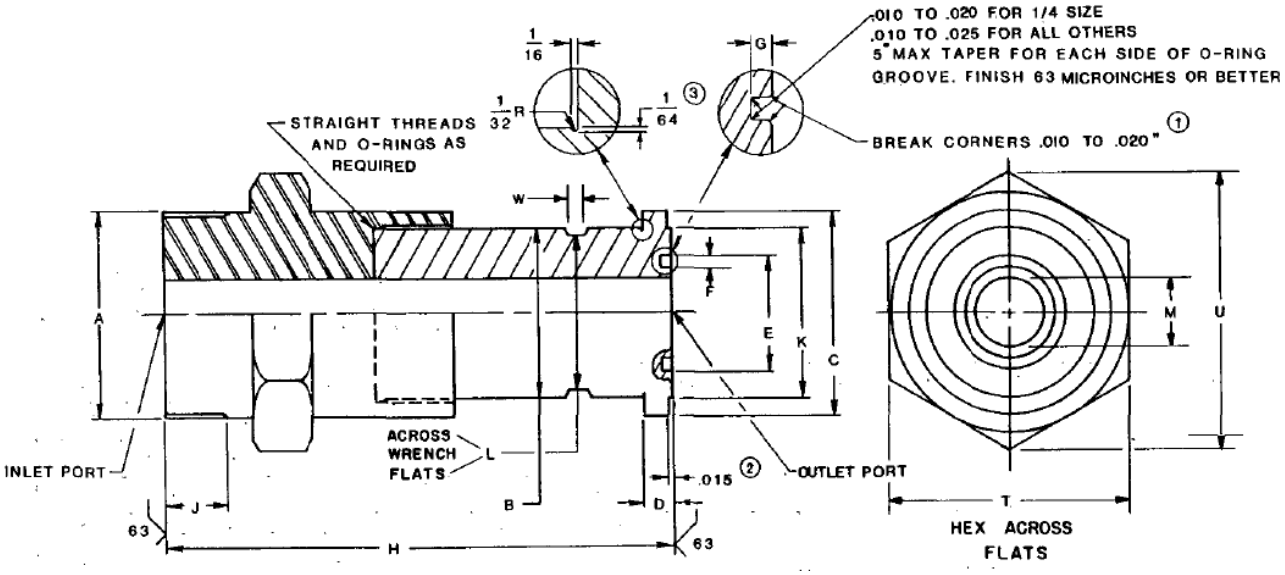

NOTES:

1 For dash no 04 edgebreak shall be 0 005–0 015

2 Tolerance ±0 003

3 Tolerance +1/64, -0

FIGURE 2 Valve body

Source: https //assist.dla.mil -- Downloaded: 2014-08-03T13:27Z

Downloaded from http://www.everyspec.com

TABLE II Body dimensions

Dash no.	NPS 1/	A (dia)	B (dia) +0.000 -0.003	C (dia) ±1/64 -0	D ±0.015	E (dia)	F +0.000 -0.006	G +0.000 -0 006	H ±1/16	J (min)	K ±1/64	O-ring AS3209 – ref. only	L	M	T	U	W
04	¼	1 3/16-12UN-3A	0 872	1 1/16	¼	0 813	0 142	0 080	3 7/8	½	-	114	¾	0 302	1 3/8	1 588	9/16
06	3/8	1 3/8-12UN-3A	0 997	1¼	5/16	1 007	0 187	0 107	4 1/16	½	-	210	7/8	0 423	1 5/8	1 876	5/8
08	½	1¾-12UN-3A	1 372	1 5/8	5/16	1 132	0 187	0 107	4 3/8	½	-	212	1¼	0 546	2	2 309	13/16
12	¾	2-12UN-3A	1 622	1 7/8	5/16	1 257	0 187	0 107	5 3/16	½	1 5/8	214	1 3/8	0 742	2 3/8	2 742	1
16	1	2 5/16-12UNS-3A 2/	1 934	2 3/16	5/16	1 444	0 187	0 107	5 7/8	5/8	1 13/16	217	1 5/8	0 957	2¾	3 175	1
20	1¼	2¾-12UN-3A	2 372	2 5/8	5/16	1 757	0 187	0 107	6 7/16	5/8	2 1/8	222	2 1/16	1 280	3¼	3 752	1¼
24	1½	3 1/16-12UNS-3A 3/	2 559	2 15/16	3/8	2 007	0 187	0 107	7 5/8	¾	2 3/8	224	2¼	1 500	3¾	4 330	1½
32	2	3¾-12UN-3A	3 184	3 5/8	7/16	2 507	0 187	0 107	8 1/8	¾	2 7/8	228	2¾	1 940	4 3/8	5 051	1 5/8
40	2½	4½-12UN-3A	3 935	4 5/16	7/16	2 882	0 187	0 107	9 1/8	1	3 7/6	231	3 3/8	2 320	5 1/8	5 918	1 5/8

NOTES:

1/ Check valve port dimensions are based on schedule 80 pipe Use in other schedule piping may increase noise characteristic slightly

2/ Pitch diameter (PD) 2 2584–2 2539

3/ PD 3 0084–3 0037

Source: https //assist.dla.mil -- Downloaded: 2014-08-03T13:27Z

Downloaded from http://www.everyspec.com

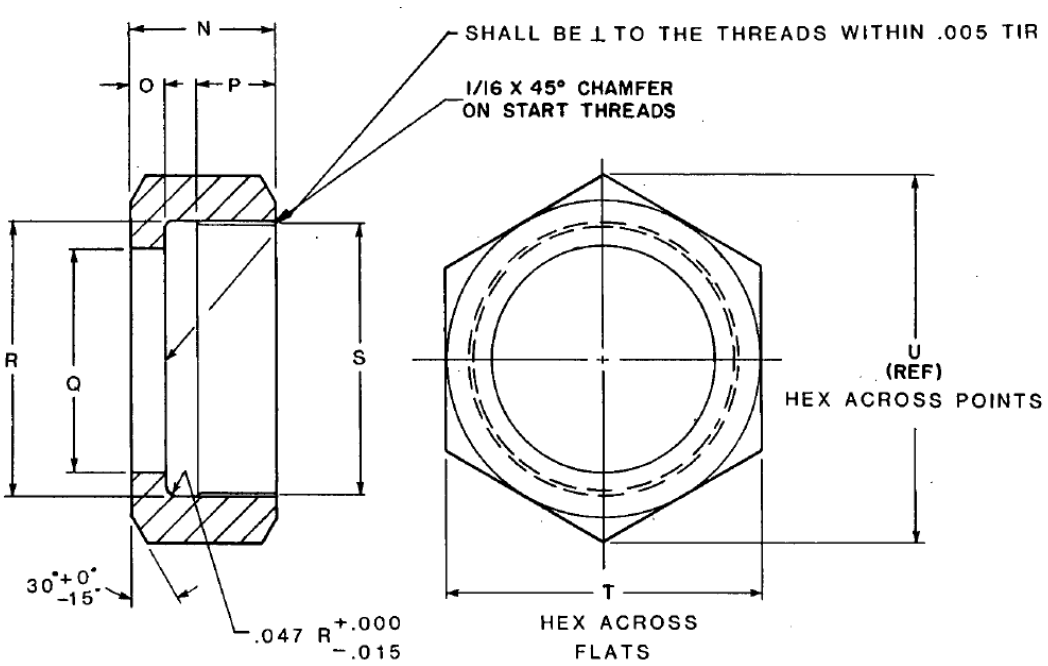

FIGURE 3 Union nut

Source: https //assist.dla.mil -- Downloaded: 2014-08-03T13:27Z

Downloaded from http://www.everyspec.com

TABLE III. Union nut dimensions. [1/]

Dash no.	NPS [2/]	N	O +0.015 -0.000	P (min length of full threads)	Q (dia) +0.003 -0.000	R (dia) +0.000 -0.010	S (dia)	T	U (ref)
04N	¼	1	0.250	9/16	0.878	1.201	1 3/16-12UN-3B	1⅜	1.588
06N	⅜	1 1/16	0.250	9/16	1.003	1.388	1⅜-12UNF-3B	1⅝	1.876
08N	½	1 1/16	0.250	9/16	1.378	1.763	1¾-12UN-3B	2	2.309
12N	¾	1⅛	0.313	9/16	1.628	2.013	2-12UN-3B	2⅜	2.742
16N	1	1¼	0.313	11/16	1.940	2.326	2 5/16-12UNS-3B [3/]	2¾	3.175
20N	1¼	1¼	0.313	11/16	2.378	2.763	2¾-12UN-3B	3¼	3.752
24N	1½	1½	0.375	13/16	2.565	3.076	3 1/16-12UNS-3B [4/]	3¾	4.330
32N	2	1½	0.375	13/16	3.190	3.763	3¾-12UN-3B	4⅜	5.051
40N	2½	1⅞	0.438	1 1/16	3.941	4.513	4½-12UN-3B	5⅛	5.918

NOTES:

1/ Union nut dimensions captured within this table originate from 803-1385884.

2/ Check valve port dimensions are based on schedule 80 pipe. Use in other schedule piping may increase noise characteristic slightly.

3/ PD 2.2643–2.2584.

4/ PD 3.0146–3.0084.

CHANGES FROM PREVIOUS ISSUE: Marginal notations are not used in this revision to identify changes with respect to the previous issue due to the extent of the changes.

Custodian:
Navy – SH

Preparing activity:
Navy – SH
(Project 4820-2013-007)

Review activity:
DLA – CC

NOTE: The activities listed above were interested in this document as of the date of this document. Since organizations and responsibilities can change, you should verify the currency of the information above using the ASSIST Online database at https://assist.dla mil.