Downloaded from http://www.everyspec.com

INCH-POUND
MIL-DTL-2427H (AR)
w/AMENDMENT 1
04 August 2015
SUPERSEDING
MIL-DTL-2427H (AR)
05 September, 2007

DETAIL SPECIFICATION

BOX, AMMUNITION PACKING: WOOD, NAILED

This specification is approved for use by the U.S. Army Research, Development and Engineering Center (ARDEC), and is available for use by all Departments and Agencies of the Department of Defense.

1. SCOPE

1.1 Scope. This specification covers three types and nine classes of basic box designs having two exterior vertical cleats on each end as shown in figure 1. Also, it covers the closing and strapping requirements for filled boxes (see Appendix A), and prescribe the criteria to be utilized to determine the serviceability of Government furnished boxes (see Appendix B). The box may or may not have hinge and hasp hardware, rope handles and double end construction.

1.2 Classification. The basic box design and modifications are of the following types, classes and grades:

Type I	-	Top opening without rope handles
Class 1	-	Without hardware, with two cover cleats. See figure 2
Class 2	-	With hardware, with two cover cleats. See figure 3
Class 3	-	Without hardware, with two cover cleats, light construction. See figure 2
Type II	-	Top opening with two rope handles.

Comments, suggestions, or questions on this document should be addressed to the Commander, U.S. Army ARDEC, ATTN: RDAR-EIQ-SA, Picatinny, NJ 07806-5000 or emailed to ardec-stdzn@pica.army.mil. Since contact information can change, you may want to verify the currency of this address information using the ASSIST Online database at https://assist.dla.mil.

AMSC N/A FSC 8140
DISTRIBUTION STATEMENT A. Approved for public release;distribution is unlimited.

Downloaded from http://www.everyspec.com

Class 1	-	Without hardware, with two cover cleats. See figure 4.
Class 2	-	With hardware, with two cover cleats. See figure 5
Class 3	-	With hardware, with three cover cleats. See figure 6
Class 4	-	With hardware, with rope handles on cover cleats, with double end construction. See figure 7.
Class 5	-	With hardware, with double end construction. See figure 8.
Type III	-	End opening with two rope handles.
Class 1	-	With carriage bolt hardware, with two cover cleats and double end construction. See figure 9
Grade A	-	Preservative and heat treated boxes for the unrestricted overseas shipment or long term storage and handling of ammunition or explosive ammunition components.
Grade B	-	Heat treated, non-preservative treated boxes for overseas shipment and short term storage and handling of ammunition or explosive ammunition components
Grade C	-	Boxes without preservative or heat treatment. For interplant shipment and for storage and handling under controlled conditions of ammunition or explosive ammunition components, for domestic shipment only

2. APPLICABLE DOCUMENTS

2.1 General. The documents listed in this section are specified in sections 3 and 4 of this specification. This section does not include documents in other sections of this specification or recommended for additional information or as examples. While every effort has been made to assure the completeness of this list, document users are cautioned that they must meet all requirements cited in sections 3 and 4 of this specification, whether or not they are listed.

2.2 Government documents.

2.2.1 Specifications and Standards. The following specifications, standards, and handbooks form a part of this specification to the extent specified herein. Unless otherwise specified, the issues of these documents are those cited in the solicitation or contract.

Downloaded from http://www.everyspec.com

COMMERCIAL ITEM DESCRIPTIONS

A-A-55057	- Panels, Wood/Wood Based; Construction and Decorative

DEPARTMENT OF DEFENSE STANDARDS

MIL-STD-129	- Military Marking for Shipment and Storage
MIL-STD-1916	- DOD Preferred Methods For Acceptance of Products

(Copies of these documents are available online at http://quicksearch.dla.mil/ or from the Standardization Documents Order Desk, 700 Robbins Avenue, Building 4D, Philadelphia, PA 19111-5094.)

2.2.2 Other Government documents, drawings and publications. The following other Government documents, drawings, and publications form a part of this document to the extent specified herein. Unless otherwise specified, the issues of these documents are those cited in the solicitation or contract.

U.S. ARMY ARMAMENT RESEARCH AND DEVELOPMENT CENTER (ARDEC), DRAWINGS

8796520	-	Swivel Assembly
8796523	-	Hasp
8796524	-	Hinge
8797512	-	Swivel Assembly

(Copies of these drawings may be requested online at Drawing-Request@pica.army.mil or from US Army ARDEC, ATTN: AMSRD-AAR-AIS-T, Picatinny, NJ 07806-5000.)

2.3 Non-government publications. The following documents form a part of this document to the extent specified herein. Unless otherwise specified, the issues of the documents are those cited in the solicitation or contract.

Downloaded from http://www.everyspec.com

AMERICAN SOCIETY OF MECHANICAL ENGINEERS

ASME B18.6.4 - Thread Forming and Thread Cutting Tapping Screws and Metallic Drive Screws [inches Series]

(Copies of ASME standards are available online from http://www.asme.org/ and from ASME International, Three Park Avenue, New York, NY 10016-5990.)

AMERICAN SOCIETY FOR TESTING AND MATERIALS

ASTM D6199 - Standard Practice for Quality of Wood Members of Containers and Pallets
ASTM D3953 - Standard Specification for Strapping, Flat Steel and Seals
ASTM F 1667 - Standard Specification for Driven Fasteners: Nails, Spikes, and Staples
ASTM D 4689 - Standard Specification for Adhesive, Casein-Type
ASTM D 3950 - Standard Specification for Strapping, Nonmetallic (and Joining Methods)

(Copies of ASTM standards are available online from http://www.astm.org/ and from American Society for Testing and Materials, 100 Barr Harbor Drive, West Conshohocken, PA 19428-2959.)

AMERICAN SOCIETY FOR QUALITY

ANSI/ISO/ASQ Q9000 – Quality Management Systems – Fundamentals and Vocabulary

(Copies of ASTM standards are available online from http://www.asq.org/ and from American Society for Quality, P.O. Box 3005, Milwaukee, WI 53201-3005.)

THE CORDAGE INSTITUTE

CI 1500 - TEST METHODS FOR FIBER ROPE

(Copies of THE CORDAGE INSTITUTE standards are available online from http://www.ropecord.com/ and from the Cordage Institute, 994 Old Eagle School Road, Suite 1019, Wayne, PA 19087.)

2.4 Order of precedence. In the event of a conflict between the text of this specification and the references cited herein, the text of this specification take precedence. Nothing in this document, however, supersedes applicable laws and regulations unless a specific exemption has been obtained.

Downloaded from http://www.everyspec.com

3. REQUIREMENTS

3.1 First article. When specified (see 6.2), a sample shall be subject to first article inspection in accordance with 4.2.

3.2 Material.

3.2.1 Wood. The species of wood acceptable under this specification are classified in Table I. When a group is specified, any wood in that group may be used unless otherwise specified. If a group is not specified, woods from any group may be used.

Downloaded from http://www.everyspec.com

Table I. Classification of wood

GROUP I	
Alder, red	Cucumbertree
Aspen (Poplar)	Cypress
Basswood	Fir (Abies, Sp.)
Buckeye	Pine (except southern yellow)
Butternut	Spruce
Cedar[1]	Willow[1]
Chestnut	Yellow Poplar
Cottonwood	
GROUP II	
Douglas Fir	Larch (Tamarack)
Hemlock	Pine, Southern Yellow
GROUP III	
Ash (Cabinet Texture)[2]	Magnolia
Cherry	Maple, soft
Elm, soft	Sycamore
Gum, red or black	Tupelo, water
GROUP IV	
Ash (Tough texture)[3]	Hickory
Beech	Locust
Birch	Maple, hard
Elm, hard	Oak
Hackberry	Pecan

[1]. For Group 1 woods, when lumber 5/8 inch in thickness or less is specified on the applicable drawing or specification, Cedar and Willow shall not be used.

[2]. Average weight 2800 pounds per 1000 board feet.

[3]. Average weight over 3500 pounds per 1000 board feet.

Downloaded from http://www.everyspec.com

3.2.2 Moisture content. The moisture content of the lumber after seasoning, and prior to the application of preservative treatment shall not be greater than 19 percent nor less than 12 percent of its oven dry weight as evidenced by the test specified in 4.4.2.

3.2.3 Finish. Lumber shall be cut to length and surfaced on two sides. Edges shall be straight and square with the surface of the lumber. Unless otherwise specified by the procuring activity lumber may be surfaced on one side, and resawn on the other side; the resawn surface shall face to the inside of the box. Resawn lumber must meet specified thickness requirements.

3.3 Defects standards. The following defects standards shall apply to lumber as cut to size and assembled in the box.

3.3.1 Season check. Slight season checks occurring in the center portion of a board in a finished box shall be permitted provided they do not extend through the board in which they occur. Season checks which extend through the board shall be considered as splits (3.3.2) except that when adjacent to a knot they will be considered a component part of incased knot defect (3.3.3.2). Season checks occurring at the end of the board shall be cause for rejection unless repaired by corrugated fasteners and by additional nailing in accordance with the procedure outlined for splits.

3.3.2 Splits. (see 6.4). Splits in sides, top and bottom may be repaired as stated herein. Splits diverting to the edge of a board, or which if extended would diverge to the edge of a board are not permitted. Splits extending the full length of a board in which the remaining pieces are at least 1½ inches wide on either side of the split are acceptable provided they are repaired with corrugated fasteners. Splits in which the remaining pieces are at least 2½ inches wide shall be repaired by additional nailing in accordance with the requirements for individual boards. Splits less than the full length of the board but over three inches in length which would not diverge to an edge shall be repaired with corrugated fasteners. Splits in ends of boards as discussed above and caused by nailing shall be repaired as described. Splits adjacent to the edge of a board caused by nailing will be permitted if they do not exceed one inch in length and do not terminate in the edge of the board. Corrugated fasteners used for repair shall be one inch long and as wide as required to penetrate to within approximately 1/8 inch of the full board thickness. They shall be centered over the split. They shall be located within 3 inches of the ends of the split and between 3 and 6 inches apart along the split. Corrugated fasteners shall be driven flush with the outer surface and shall not project through the inner surface or any recess cut into the inner surface.

3.3.3 Knots and holes.

a. Sounds, tight knots shall be permitted provided the dimension measured across the board is not greater than 1/3 the width of the boards in Grade A boxes nor more than 2/3 the width of the board in Grade C boxes. Knots which occur in nailed edges or underneath hardware, shall be cause for rejection of the boxes if they crack or break out.

Downloaded from http://www.everyspec.com

b. Knot holes, loose knots or worm holes larger than ¾ inch across the largest dimension shall be cause for rejection unless repaired in accordance with 3.3.3.1. Small holes less than 1/16 inch in diameter shall be permitted in any board provided no concentration of such holes exceeds five in any square inch of surface in Grade A boxes. Individual knot holes, loose knots or worm holes, ranging in size from 1/16 inch to ¾ inch across the largest dimension, shall be permitted provided they are spaced not less than 12 inches apart in Grade A boxes or three inches in Grade C boxes.

c. A knot extending through the thickness of the board which is encased (separated for more than ½ of the circumference from the surrounding wood by hard pitch or checks) shall be considered a loose knot. If a portion of a knot has been removed from an edge of a board in manufacture, the basis for judging the knot for encasement shall be ½ the remaining circumference. Season checks extending through the thickness of the wood and so placed as to cause breaking out of a portion of a knot which would result in a hole larger than ¾ inch across the largest dimension, shall be cause for rejection.

3.3.3.1 Repair of holes and knots. Holes and loose knots may be repaired with solid wooden plugs or plywood disks, except that the application of a nail, screw, or corrugated fastener in a plug or disk utilized in a finished box shall be cause for rejection. Plywood utilized in disks shall comply with A-A-55057, Type A or C. The plugs shall be a snug fit and disks shall be from a snug fit to 1/64 inch maximum clearance. Plugs shall be of the same thickness as the board in which inserted. Counterbores for disks shall be drilled only to a depth necessary to accommodate the thickness of the disk. Plugs and disks shall be glued on all butting surfaces with glue conforming with ASTM D 4689, Class B. Holes plugged with a solid plug of the same thickness as the board shall be cause for rejection if the plug diameter measures more than 1½ inches, or if the diameter is greater than half the width of the board. Plywood disks which partially extend through the thickness of the board shall be cause for rejection if any of the following conditions given exist:

a. The knot covered, measures more than two inches across its greater diameter

b. The diameter of the disks exceeds 2½ inches.

c. The disk has a bearing on solid wood of less than 1/8 inch at any point on its circumference.

d. The disk thickness is less than ¼ inch or more than one half the thickness of the board.

Note: Holes or loose knots may be considered plugged if covered by a cleat, providing that any portion not covered measures no more than 5/8 inch in any direction. If a nail in the cleat enters such a hole or knot, the box shall be rejected unless corrected by additional nailing. As an alternate material to the plywood for the manufacture of

Downloaded from http://www.everyspec.com

disks, lumber of the same species as that repaired is acceptable provided that the direction of grain in the disks is not parallel to the axis of the disk.

3.3.3.2 Other surface defects. (see 6.5). At least one surface on each board, i.e., the surface to be placed on the outside of the box, shall be sufficiently smooth and free of stain to permit legible marking. Wane shall not exceed ½ inch in width on the surface on which it appears for one sixth the length or one half the thickness. Evidence of decay in which the disintegration is readily recognizable shall be cause for rejection.

3.3.4 Box cleats.

3.3.4.1 Grade A and B box cleats. The requirements of paragraph 3.3.3 shall apply on all cleats except end cleats. The divergence of the grain in each end cleat shall not exceed one inch in 10 inches of length. In the end cleats when handles are used, the type number and size of knots in the area defined by the width of the end cleat and the lengthwise limits of the groove will be as follows:

a. A maximum (max) of 10, less ingrown knots, not larger than 1/16 inch wide by 1/8 inch long spaced 1/2 inch minimum (min), center to center.

b. A single well ingrown knot not more than 1/4 inch across the widest dimensions.

Note: When knots as specified in “a” are present, a knot as specified in “b” shall not be permitted. In other areas of such cleats or when handles are not used, solid, well ingrown knots, not more than one fourth the width of the boards across the widest dimension shall be permitted provided that if there is more than one such knot, they shall not be closer together than five inches. Knots of any type whether loose or solid, in the ends of cleats, shall be permitted, provided they are entirely contained within an area extending not more than 1 inch from the end of the cleat.

c. The exposed edge at the bottom end of vertical end cleats may be beveled 1/4 inch at a 45 degree angle at the option of the procuring activity.

3.3.4.2 Grade C box cleats. All requirements of Grade A box cleats (3.3.4.1) apply to Grade C box cleats except that in areas not grooved for a handle, solid, well ingrown knots shall be permitted with diameters not exceeding half the width of the cleat.

3.4 Rope handles. Rope handles shall be made from rope as specified in 3.4.1, or 3.4.2. The rope shall be attached as shown in figure 1. The length of the rope used shall be determined in accordance with figure 1A. This length includes approximately eleven (11) inches of rope (five and on half inches under each cleat) that is routed under the cleats for attachment of rope handle. Rope handles shall show no evidence of fraying or excessive strain and shall be capable of supporting a static load equal to twice the gross weight of the box as prepared for actual shipment. Neither the rope nor the handle assembly including cleats, shall fail when tested in accordance with 4.4.1.

Downloaded from http://www.everyspec.com

3.4.1 Polyethylene rope handles. Polyethylene rope for all handle applications shall meet the following requirements:

a. Rope size, 7/16 inch diameter
b. Color, Black
c. Filament size, 600 Denier
d. Yarn, 3-Ply, balance ply yarn
e. Rope, .042 lbs/foot, maximum (4.3.3.3)
f. Rope lay, 1.31 inches plus/minus 5%
g. Breaking strength, 3000 lbs minimum average (4.3.3.4)

3.4.2 Polypropylene rope handles. Polypropylene rope for all handle applications shall meet the following requirements:

a. Rope size, 7/16 inch diameter
b. Color, Black
c. Yarn, Single ply (3 yarns/strand)
d. Rope, .033 lbs/foot max. (4.3.3.3)
e. Rope lay, 1.7 inches plus/minus 5%
f. Breaking strength, 2500 lbs minimum average (4.3.3.4)

3.5 Metal fittings. Metal fittings shall be manufactured in accordance with the following drawings:

a. 8796520, Swivel Assembly
b. 8796523, Hasp
c. 8796524, Hinge
d. 8796512, Swivel Assembly

Note: All boxes for which hasp and hinge hardware is specified shall have one hasp and two hinges on boxes over 18 inches in inside length; one hasp and one hinge shall be used on boxes 18 inches or less in inside length. One swivel assembly, in accordance with either drawing specified above, shall be used with each hasp. The number of screws required shall be determined by the number of screw holes provided in each part used. Improperly driven screws may be removed and reseated provided that the screw holes are suitably plugged using any species of wood listed in 3.2.1. Screws shall be standard commercial number 7x3/4 inch or number 8x3/4 inch tamperproof wood or sheet metal screws with countersink heads. The screws shall be zinc or cadmium plated, and meet all requirements of ASME B18.6.4, Type AB except for head design. Any style of tamperproof head is acceptable so long as the screws cannot be removed with a common hand tool.

3.6 Thickness and width of lumber.

3.6.1 Thickness. Unless otherwise specified the wood thickness requirement depicted on the applicable figure in the specification shall apply. When thicknesses other than those depicted are required for any board or piece but no tolerance is given, a

Downloaded from http://www.everyspec.com

tolerance of plus or minus 1/32 inch shall apply. Occasional variations in thickness due to mismanufacture shall be permitted for not more than 10 percent of the surface area of the box.

3.6.2 Width. The minimum width of any individual board used in the sides, top, bottom, or ends of a box shall be 2 1/2 inches. (See note)

Note: When authorized by the procuring activity, one board may be less than 2-1/2 inches wide in any side, top, or bottom, provided that it is butt jointed and fastened to an adjacent board with corrugated fasteners. The joint shall be made in accordance with the requirements of 3.3.2 for the repair of full length splits. When nailing the jointed board, at least one nail shall pass through each end of the narrow piece of the jointed board.

3.7 Nailing.

3.7.1 Nails. Nails shall be cement coated or chemically etched of cooler, corker, sinker, or box type to comply with the requirements of ASTM F 1667, Type 1, Style 4B, 7, 8, or 9. Uncoated nails may be used in nailing cleats when the nails pass through both the cleat and the board and are clinched. Alternatively, for Group II wood only, blunt pointed or truncated nails may be used in lieu of diamond pointed nails as specified above, provided the blunt or truncated nail is the same length as specified for the diamond pointed nail. Alternative fasteners may be used as specified in 3.7.4.

3.7.2 Size. The size of nails for boxes constructed of 11/16 inch thick sides, tops, bottoms and ends where the nail cannot be clinched shall be 7d for Group I, II and III woods and 6d for Group IV woods. Boxes constructed with 1/2 inch thick sides, tops, bottoms and top cleats shall be nailed with 6d nails. When fastening box members where clinching is required, as in fastening top cleats and end cleats the length of nail shall be determined by the sum of the minimum thicknesses to be joined plus adequate allowance for a minimum 1/8 inch clinch.

3.7.3 Spacing. The average spacing of nails holding the sides, top or bottom to the ends and cleats shall not be greater then the value shown in the Table II and nails shall be located as shown in figures 1, 8, and 9. Nailing of sides to ends and end cleats shall be in accordance with figure 8 for class 5 boxes. In the event that it is necessary to exceed this spacing because of small knots or checks in the nailing end or because of the location of joints between boards, the distance between any two adjacent nails shall not be greater than 1 1/2 times the spacing given in Table II.

Downloaded from http://www.everyspec.com

TABLE II. Average spacing of nails (Except for nailing top and bottom to sides)

Size of Nails	Average spacing for nailing cleats to ends, (inches) or for nailing top and bottom to ends sides, top or bottom	Average spacing cleats (inches) to ends and end for nailing sides
6d or smaller	1 ¾	1 ½
7d	2	1 ¾
8d	2 ¼	2
9d when specified on drawing (dwgs)	2 ½	2 ¼
10d when specified on dwgs	3	2 ½
12d when specified on dwgs	3 ½	2 ¾
16d when specified on dwgs	4	3 ¼
20d when specified on dwgs	4 ½	3 ¾

a. Each board in the side, top, or bottom shall have at least two nails at each nailing end. Top, bottom and sides shall be secured to the end board of the end assembly by not more than one half of the total required number of nails driven into the end and the remaining one half or greater into the cleat. Nails shall be located as shown in figures 1, 8 and 9.

b. The nails holding the bottom to the sides shall be spaced between six and eight inches apart. When the top is not fastened with hardware, the nails holding it to the side shall be spaced the same as for the bottom. When using 1/2 inch lumber, tops and bottoms shall not be nailed to sides.

c. The nails for fastening cleats to ends and tops (or sides and bottom when specified) shall pass through both parts and be clinched not less than 1/8 inch. The nails in each cleat shall be driven in two rows spaced as given in Table I and located as shown on figure 1, 8 and 9. Each board of an end shall be nailed to each end cleat with not less than two nails.

d. Each board comprising a top or cover shall be secured to each top cleat by nailing in accordance with Table I as follows. At least two nails shall enter through the top cleat and into the outer board utilized for each lengthwise edge of the top. At least one nail shall enter through the top cleat into each board utilized for the center portion of the top.

Downloaded from http://www.everyspec.com

3.7.4 Alternative fasteners.

a. Staples may be used as an alternative to nails for fastening cover cleats to cover boards. The number of staples used shall be equal to the number of nails required. Staples may be driven in a single row and from the board into the cleats. Staple legs shall be spread and the points clinched. Staples shall be made from 14 gauge wire.

b. Cleats may also be fastened with automatically driven wire having a knurled or screw type surface in lieu of the nails or staples specified above. The fasteners shall be headed and clinched. The wire used shall be 13 gauge. The number of fasteners used shall be 1 1/2 times the number of nails required. Basic nailing requirements shall be followed except that the spacing shall be decreased to provide a uniform pattern (see 6.5)

3.8 Fabrication and tolerancing.

3.8.1 Fabrication. All parts of the box shall be cut square to size and of uniform thickness. The grain in the wood shall be located in the direction providing greatest box strength; that is, lengthwise for sides, tops and bottom, crosswise for ends or as shown in Fig. 8 for double ends, lengthwise in cleats. Top and bottom edges shall be flush with the outer edges of sides and ends. Sides shall extend to cover the full thickness of ends and end cleats. End cleats shall be cut lengthwise to come within 1/8 inch of the outer surface of tops and bottoms. End cleats shall be positioned so that sides will fit flush against them. Top cleats shall be cut lengthwise to come within 1/8 inch of the top edges. Hardware shall be securely attached with screws fully seated but not over driven so that they continue to turn freely. Nails shall be driven so that neither the head nor the point will project above the surface of the wood. Occasional overdriving of nails will be permitted but no nail shall be overdriven more than .125 inches below board durface. The points of clinched nails shall be driven flush or below flush and any remaining exposed portion of the nail shall be smooth. All boxes shall be clean, uniform in appearance and free of splinters. When two nails are occasionally driven coincidentally in the same location, the nails shall be acceptable as long as the integrity of the box is not affected (splitting terminating in edge of box).

3.8.2 Tolerancing. The following dimensional allowances and tolerances will apply when not otherwise specifically stated:

a. Mismatch of boards in a panel (variation of thickness in adjacent boards) = 1/16 inch max.

b. Variation in thickness in a set of cleats, i.e., all top cleats, all end cleats = 1/16 inch max.

c. Variation due to crook in board –

Downloaded from http://www.everyspec.com

(1) Gap between adjacent boards; must butt at some point = 1/4 inch max.

(2) Failure to cover overlapped edge = 1/8 inch max.

d. Gap between boards intended to butt tightly (edges straight) = 1/8 inch max.

e. Overlap of edges intended to flush, less than flush, each edge (edges straight) = 1/8 inch max.

f. Untoleranced dimension, one inch or less = ± 1/16 inch

g. Untoleranced dimension over one inch = ± 1/8

h. Angle = ± 2 1/2º

i. Rope Handle, length = ± 1/4 inch

3.9 Box identification. Each box shall be marked on the bottom by the box manufacturer with the manufacturer's name and address, month and year of manufacture, and the drawing number, including the letter or number of the revision. The letters "PA" shall be annotated on all boxes subjected to the PQ 56 (Copper-8-quinolinolate) preservative treatment in accordance with paragraph 3.10. The letters "PB" shall be annotated on all boxes subjected to the M-GARD W550 (zinc naphthenate emulsifiable) preservative treatment in accordance with paragraph 3.10. The letters "PC" shall be annotated on all boxes subjected to either the Cunapsol 5 (copper naphthenate) or the M-GARD W510 (copper naphthenate) preservative in accordance with 3.10. The letters shall be not less than 1 inch in height. All other letters and figures shall be 1/4 inch min. in height.

3.10 Preservative treatment. Grade A boxes, individual or palletized or the finished wood parts thereof, shall be completely immersed or flooded in a solution of wood preservative formulated as follows for a minimum of one minute:

a. PQ56 reduced with water down to 1.8 percent copper-8-quinolinolate as solution (see 6.6)

b. Deleted.

Downloaded from http://www.everyspec.com

c. An emulsion of M-GARD W510 (copper naphthenate) reduce down with water to 2 percent copper as metal (see 6.12).

d. A solution of Cunapsol 5 (copper napthenate) reduced down with water to 2 percent copper as metal.

Note 1: When finished wood parts are dipped, all interior and exterior surfaces shall be completely inundated with preservative. Care shall be exercised to assure complete coverage of all surfaces of the board. Immediately following the dip treatment, wood products being treated shall be drained for a period of not less than 5 minutes. If wood products are palletized, the pallet load shall be tipped on edge to facilitate thorough drainage. After the dip treatment, the boxes must be air dried for a period of 24 hours minimum providing thru ventilation thus allowing full air circulation around all surfaces of the wood box. Accelerated drying in an oven or kiln is permitted providing oven or kiln temperature does not exceed 160° F.

Note 2: The boxes must be air dried to a maximum moisture content of 18 percent when tested in accordance with 4.4.2 prior to shipment.

3.10.1 Presence of PQ56 (copper-8-quinolinolate) preservative. When treated with PQ56, the box shall show evidence of discoloration when tested as specified in 4.4.5.

3.10.2 Deleted

3.10.3 Presence of M-GARD- W 510 (copper naphthenate) or Cunapsol 5 (copper naphthenate) preservative. When treated with M-GARD W510 or Cunapsol 5, the box shall show evidence of discoloration when tested as specified in 4.4.7.

3.11 Heat treatment (Grade A and B only). Boxes shall be fabricated from wood heat treated to a core temperature of 56 degrees Celsius for a minimum of 30 minutes or shall be heat treated to the same requirement after box fabrication. For Grade A boxes, heat treatment shall take place prior to preservation application. The box manufacturer shall be affiliated with an inspection agency accredited by the United States Department of Agriculture. Each box shall be marked to show conformance to the International Plant Protection Convention Standard. The quality mark shall be placed on both ends of the box between the end cleats or end battens.

Downloaded from http://www.everyspec.com

4. VERIFICATION

TABLE III. Requirement / verification cross-reference matrix

Requirement / verification cross-reference matrix

CLASSES OF VERIFICATION

N/A – NOT APPLICABLE
1 - ANALYSIS
2 – DEMONSTRATION
3 - EXAMINATION
4 - TEST

METHOD OF VERIFICATION

A - FIRST ARTICLE

B - ACCEPTANCE

SECTION 3 REQUIREMENTS		VERIFICATION METHOD					VERIFICATION CLASS		SECTION 4 VERIFICATION
Para.	Description	N/A	1	2	3	4	A	B	
3.1	First article				X	X	X		4.2.1/4.2.2/4.2.3
3.2	Materials	X							N/A
3.2.1	Wood				X		X	X	4.1.1
3.2.2	Moisture content					X	X	X	4.3.3.2/4.4.2
3.2.3	Finish				X		X	X	4.3.2.1
3.3	Defects standards	X							N/A
3.3.1	Season check				X		X	X	4.3.2.1
3.3.2	Splits				X		X	X	4.3.2.1
3.3.3	Knot and holes				X		X	X	4.3.2.1
3.3.3.1	Repair of holes and knots				X		X	X	4.3.2.1
3.3.3.2	Other surface defects				X		X	X	4.3.2.1
3.3.4	Box cleats	X							N/A
3.3.4.1	Grade A and B box cleats				X		X	X	4.3.2.1
3.3.4.2	Grade C box cleats				X		X	X	4.3.2.1
3.4	Rope handles				X	X	X	X	4.3.2.1/4.3.3.1/ 4.3.3.3/4.3.3.4 4.4.1/4.4.3/4.4.4
3.4.1	Polyethylene rope handles				X	X	X	X	4.3.2.1/4.3.3.1/ 4.3.3.3/4.3.3.4 4.4.1/4.4.3/4.4.4

Downloaded from http://www.everyspec.com

TABLE III. Requirement / verification cross-reference matrix - Continued

Requirement / verification cross-reference matrix

CLASSES OF VERIFICATION

N/A – NOT APPLICABLE
1 - ANALYSIS
2 – DEMONSTRATION
3 - EXAMINATION
4 - TEST

METHOD OF VERIFICATION

A - FIRST ARTICLE

B - ACCEPTANCE

SECTION 3 REQUIREMENTS		VERIFICATION METHOD					VERIFICATION CLASS		SECTION 4 VERIFICATION
Para.	Description	N/A	1	2	3	4	A	B	
3.4.2	Polypropylene rope handles				X	X	X	X	4.3.2.1/4.3.3.1/ 4.3.3.3/4.3.3.4 4.4.1/4.4.3/4.4.4
3.5	Metal fittings				X		X	X	4.3.2.1 (Notes 3, 4, 5, 6)
3.6	Thickness and width of lumber	X							N/A
3.6.1	Thickness				X		X	X	4.3.2.1
3.6.2	Width				X		X	X	4.3.2.1
3.7	Nailing	X							N/A
3.7.1	Nails				X		X	X	4.3.2.1
3.7.2	Size				X		X	X	4.3.2.1
3.7.3	Spacing				X		X	X	4.3.2.1
3.7.4	Alternative fasteners				X		X	X	4.3.2.1
3.8	Fabrication and tolerancing	X							N/A
3.8.1	Fabrication				X		X	X	4.3.2.1
3.8.2	Tolerancing				X		X	X	4.3.2.1
3.9	Box identification				X		X	X	4.3.2.1
3.10	Preservative treatment					X	X	X	4.2.1/4.3.3.5/4.4.5 /4.4.6/4.4.7

Downloaded from http://www.everyspec.com

TABLE III. Requirement / verification cross-reference matrix - Continued

Requirement / verification cross-reference matrix

CLASSES OF VERIFICATION

N/A – NOT APPLICABLE
1 - ANALYSIS
2 – DEMONSTRATION
3 - EXAMINATION
4 - TEST

METHOD OF VERIFICATION

A - FIRST ARTICLE

B - ACCEPTANCE

SECTION 3 REQUIREMENTS		VERIFICATION METHOD					VERIFICATION CLASS		SECTION 4 VERIFICATION
Para.	Description	N/A	1	2	3	4	A	B	
3.10.1	Presence of PQ56 (copper-8-quinolinolate) preservative					X	X	X	4.3.3.5/4.4.5
3.10.2	Presence of M-GARD W550 (zinc naphthenate emulsifiable)					X	X	X	4.3.3.5/4.4.6
3.10.3	Presence of M-GARD W510 (copper naphthenate) or Cunapsol (copper naphthenate) preservative					X	X	X	4.3.3.5/4.4.7
3.11	Heat treatment				X		X	X	4.3.3.6/4.4.8

Downloaded from http://www.everyspec.com

4.1 Classification of inspections. The inspection requirements specified herein are classified as follows:

a. First article inspection (see 4.2)

b. Conformance inspection (see 4.3)

4.2 First article inspection.

4.2.1 Submission. A first article sample shall be submitted for evaluation in accordance with the provisions of 4.2.2. The first article sample shall consist of three consecutively produced boxes of one grade, type and style which have been produced using the same production processes, procedures and equipment as will be used in fulfilling the contract. When polyethylene or polypropylene rope is used, a continuous length of rope sufficient to perform the tests specified herein shall also be furnished. All materials shall be obtained from the same sources of supply as will be used in regular production.

4.2.2 Inspections to be performed. Samples may be subjected by the Government to any or all of the examinations and tests specified in this specification and to any or all requirements of the applicable drawings.

4.2.3 Rejection. If any box assembly or polyethylene or polypropylene rope sample, if pertinent, fails to comply with any of the applicable requirements, the first article sample shall be rejected.

4.3 Conformance inspection

4.3.1 Lot formation. Lot formation shall be in accordance with lot formation requirement of MIL-STD-1916 paragraph “Formation and identification of lots or batches”.

4.3.2 Examination. Sampling plans and procedures for Major and Minor defects shall be in accordance with MIL-STD-1916 except that continuous sampling plans may be used if approved by the procuring activity.

Downloaded from http://www.everyspec.com

Conformance inspection by classification of characteristics

PARAGRAPH 4.3.2.1	TITLE Assembly					SHEET 1 OF 7	DRAWING NUMBER drawing indicated by contract / NEXT HIGHER ASSEMBLY
CLASSIFICATION	Grade			EXAMINATION OR TEST	CONFORMANCE CRITERIA	REQUIREMENT PARAGRAPH	INSPECTION METHOD REFERENCE
	A	B	C				
Critical				None defined			
Major							
101	x	x	x	Inside height, min	Level IV	See (*)	Standard Measuring Equipment (SME)
102	x	x	x	Inside length, min	Level IV	See (*)	SME
103	x	x	x	Inside width, min	Level IV	See (*)	SME
104	x	x	x	Depth to shoulder (box made for metal liner)	Level IV	See (*)	SME
105	x	x	x	Location of separator (when required)	Level IV	See (*)	SME
106	x	x	x	Location of knot in end cleat (batten)	Level IV	3.3.4.1/3.3.4.2	SME
107	x	x	x	Grain in end cleat not straight	Level IV	3.3.4.1	SME
108	x	x	x	Width of knot excessive	Level IV	3.3.3	SME
109	x	x	x	Hole, loose knot or knot surrounded by checking	Level IV	3.3.3	SME

*. Dimensions shall be specified by drawings indicated by contract

Downloaded from http://www.everyspec.com

Conformance inspection by classification of characteristics

PARAGRAPH 4.3.2.1	TITLE Assembly					SHEET 2 OF 7	DRAWING NUMBER drawing indicated by contract / NEXT HIGHER ASSEMBLY
CLASSIFICATION	Grade A	Grade B	Grade C	EXAMINATION OR TEST	CONFORMANCE CRITERIA	REQUIREMENT PARAGRAPH	INSPECTION METHOD REFERENCE
Major							
110	x	x		Acceptable holes, loose knots or knots surrounded by checking not sufficiently separated	Level IV	3.3.3	SME
111	x	x		Plugged hole too large	Level IV	3.3.3.1	SME
112	x	x	x	Improper use of board or piece	Level IV	3.6.1/3.6.2	SME
113	x	x	x	Knot holes less than 12 inches apart	Level IV	3.3.3	SME
114	x	x		Solid knot in nailing edge or under hardware split by nail screw or milling operation (See Note 1)	Level IV	3.3.3	Visual
115	x	x	x	Nail protruding inside box	Level IV	3.8.1	Visual
116	x	x	x	Grain of wood in wrong direction	Level IV	3.8.1	Visual
117	x	x		Nails not in pattern shown on drawing or as required by the specification	Level IV	3.7.3	Visual
118	x	x		Split terminating in edge of board	Level IV	3.3.2	Visual

Note 1. Knots in nailing edges or underneath hardware require particular attention. When nails are driven through them, knots may crack or breakout, appreciably weakening the construction. This sometimes can be corrected by extra wood if nails can be placed in a proper location in solid wood. When such a successful repair is presented, the box should be considered acceptable. If the attempted repair results in further cracking, however, the box shall be classed defective. Knots in the place of attachment of hardware often crack sufficiently to loosen the hardware when screws are tightened. Milling operations necessary for the insetting of hardware also often cause such knots to crack, making proper attachment of the hardware impossible. These two conditions cannot be repaired and the box shall be classed defective.

Downloaded from http://www.everyspec.com

Conformance inspection by classification of characteristics

PARAGRAPH 4.3.2.1	TITLE Assembly					SHEET 3 OF 7	DRAWING NUMBER drawing indicated by contract / NEXT HIGHER ASSEMBLY
CLASSIFICATION	Grade			EXAMINATION OR TEST	CONFORMANCE CRITERIA	REQUIREMENT PARAGRAPH	INSPECTION METHOD REFERENCE
	A	B	C				
Major							
119	x	x		Markings misleading or unidentifiable	Level IV	3.9	Visual
120	x	x	x	Repair plug above surface or improperly secured	Level IV	3.3.3.1	Visual
121	x	x	x	Nail not clinched	Level IV	3.8.1	Visual
122	x	x	x	Nail not of type or size required	Level IV	3.7.1/3.7.2	SME/Visual
123	x	x		Rope end not visible at cleat groove	Level IV	3.4	Visible
124	x	x		Nails not driven into centerline of cleat and over centerlines of grooves as shown in Figure 1	Level IV	3.7.3	Visible
Minor							
201	x	x	x	Inside height, max	Level II	See (*)	SME
202	x	x	x	Inside length, max	Level II	See (*)	SME
203	x	x	x	Inside width, max	Level II	See (*)	SME

*. Dimensions shall be specified by drawings indicated by contract

Downloaded from http://www.everyspec.com

Conformance inspection by classification of characteristics

PARAGRAPH 4.3.2.1	TITLE Assembly					SHEET 4 OF 7	DRAWING NUMBER drawing indicated by contract / NEXT HIGHER ASSEMBLY
CLASSIFICATION	Grade			EXAMINATION OR TEST	CONFORMANCE CRITERIA	REQUIREMENT PARAGRAPH	INSPECTION METHOD REFERENCE
	A	B	C				
Minor							
204	x	x	x	Thickness of wood	Level II	3.6.1	SME
204.1	x	x	x	Width of wood	Level II	3.6.2	SME
205	x	x	x	Width of cleats	Level II	3.8.1	SME
206	x	x	x	Worm holes	Level II	3.3.3	SME
207			x	Hole, loose knot or knot surrounded by checking	Level II	3.3.3.	SME
208			x	Acceptable holes, loose knots knots surrounded by checking not sufficiently separated	Level II	3.3.3	SME
209			x	Plugged hole too large	Level II	3.3.3.1	SME
210	x	x	x	Wane on surface of board excessive (See Note 2.)	Level II	3.3.3.2	SME
211	x	x	x	Thickness of panels, boards or sets of cleats, max	Level II	3.8.2	SME
212	x	x	x	Gap between boards, max	Level II	3.8.2	SME

Note 2. Wane is bark, or lack of wood, on the edge or corner of a board. When wane is present on a board or piece and exceeds the limits as permitted by this specification, the box shall be classed defective.

Downloaded from http://www.everyspec.com

Conformance inspection by classification of characteristics

PARAGRAPH 4.3.2.1	TITLE Assembly					SHEET 5 OF 7	DRAWING NUMBER drawing indicated by contract / NEXT HIGHER ASSEMBLY
CLASSIFICATION	Grade			EXAMINATION OR TEST	CONFORMANCE CRITERIA	REQUIREMENT PARAGRAPH	INSPECTION METHOD REFERENCE
	A	B	C				
Minor							
213	x	x	x	Overlap of edges incorrect	Level II	3.8.2	SME
214	x	x	x	Cleat extending beyond box surface	Level II	3.8.1	Visual
215	x	x	x	Separator improperly assembled	Level II	See(***)	Visual
216	x	x	x	Separator of incorrect pattern	Level II	See(***)	Visual
217	x	x	x	Nail protruding outside box	Level II	3.8.1	Visual
218	x	x	x	Split in board	Level II	3.3.2	Visual
219	x	x	x	Screw in split or joint between boards (See Note 5)	Level II	3.5/3.8.1	Visual
220	x	x	x	Handle missing, not properly located, or of wrong pattern	Level II	3.4	Visual
221	x	x	x	Nail missing	Level II	3.7.3	Visual
222	x	x	x	Nail bent on box surface	Level II	3.8.1	Visual
223	x	x	x	Protective coating damaged (See Note 6)	Level II	3.5	Visual

***. See applicable drawing indicated by contract
Note 5. Hardware screws occurring in a split or in the joint between two boards will have less holding power than screws in a solid board. Screws in splits, whether caused by the screw or not, and in joints between boards shall be cause to classify the box defective. No repairs are permitted since there is no way to replace the holding power lost by reason of the defect.
Note 6. When the base metal of the hardware has been exposed or if the action of a corrosive agent has impaired the effectiveness of the protective coating, the box shall be classified defective.

Downloaded from http://www.everyspec.com

Conformance inspection by classification of characteristics

PARAGRAPH 4.3.2.1	TITLE Assembly					SHEET 6 OF 7	DRAWING NUMBER drawing indicated by contract NEXT HIGHER ASSEMBLY
CLASSIFICATION	Grade			EXAMINATION OR TEST	CONFORMANCE CRITERIA	REQUIREMENT PARAGRAPH	INSPECTION METHOD REFERENCE
	A	B	C				
Minor							
224			x	Marking misleading or unidentifiable	Level II	3.9	Visual
225			x	Solid knot in nailing edge or under hardware split by nail, screw, or milling operation (See Note 1)	Level II	3.3.3	Visual
226			x	Nails, not in pattern shown on drawing or as required by the specification	Level II	3.7.3	Visual
227			x	Split terminating in edge of board	Level II	3.3.2	Visual

Note 1. Knots in nailing edges or underneath hardware require particular attention. When nails are driven through them, knots may crack or breakout, appreciably weakening the construction. This sometimes can be corrected by extra wood if nails can be placed in a proper location in solid wood. When such a successful repair is presented, the box should be considered acceptable. If the attempted repair results in further cracking, however, the box shall be classed defective. Knots in the place of attachment of hardware often crack sufficiently to loosen the hardware when screws are tightened. Milling operations necessary for the insetting of hardware also often cause such knots to crack, making proper attachment of the hardware impossible. These two conditions cannot be repaired and the box shall be classed defective.

Downloaded from http://www.everyspec.com

PARAGRAPH 4.3.2.1	TITLE Assembly					SHEET 7 OF 7	DRAWING NUMBER drawing indicated by contract / NEXT HIGHER ASSEMBLY
CLASSIFICATION	Grade			EXAMINATION OR TEST	CONFORMANCE CRITERIA	REQUIREMENT PARAGRAPH	INSPECTION METHOD REFERENCE
	A	B	C				
Minor							
228	x	x	x	Stain on surface of board excessive or surface not smooth (See Note 7)	Level II	3.3.3.2	Visual
229	x	x	x	Incorrect seating or operation of top (See Note 4)	Level II	3.8.1	Visual/Manual
230	x	x	x	Loose screw or screw not properly seated (See Note 3)	Level II	3.8.1	Visual/Manual
231	x	x	x	Decay	Level II	3.3.3.2	Visual/Manual
232	x	x	x	Screw not of type or size required	Level II	3.5	SME
233	x	x	x	Length of rope handle	Level II	3.4	SME

Note 3. A box shall be classed defective if more than one screw in any hasp or hinge, or either screw in the swivel, is not fully seated or is fully seated but can be continuously rotated with a screw driver using normal hand pressure. The practice of hammering screws to seat them shall not be permitted, and evidence that this has occurred is sufficient cause for classifying the box defective.
Note 4. Incorrect seating or operation of the top, which is due to improperly attached or bent hardware or improperly assembled boards and cleats, shall be cause for rejection.
Note 7. Stain is a discoloration, occurring on or in the lumber, of any color other than the natural color of the board on which it appears. A box shall be classified defective if it contains any boards or piece on which at least one surface is not sufficiently smooth and free of stain to permit legible marking.

Downloaded from http://www.everyspec.com

4.3.3 Testing

4.3.3.1 Load test of rope handle (see 3.4), Major defect. A sample of 15 boxes shall be selected at random from each lot and tested as specified in 4.4.1. If any box fails to comply with the applicable requirements, the lot shall be rejected.

4.3.3.2 Moisture content. (see 3.2.2), Major defect. A sample of 15 boxes shall be selected at random from each lot and tested as specified in 4.4.2. If more than three boards or pieces of the total tested fail to comply with the applicable requirements, the lot shall be rejected.

4.3.3.2.1 Retest. If one or more boxes fail to comply with the requirements, the lot shall be considered eligible for retest, if requested by the contractor. A sample of 15 additional boxes shall be selected and subjected to the same test. If one or more boards or pieces of the total tested fails to comply with the requirements of 3.2.2, the lot shall be rejected.

4.3.3.3 Rope weight. (see 3.4). This test is applicable to first article inspection lots only (see 4.2.1) when polyethylene or polypropylene rope handles are to be supplied. A 12 yard sample of polyethylene or polypropylene rope shall be furnished. If the rope fails to comply with the requirements of 3.4, when subjected to the test specified in 4.4.3, the first article lot shall not be approved.

4.3.3.4 Rope breaking strength. (see 3.4). This test is applicable to first article lot only (see 4.2.1) when polyethylene or polypropylene rope handles are to be supplied. A 75 foot sample of polyethylene or polypropylene rope shall be supplied, cut into five pieces approximately equal in length. The five pieces shall be subjected to the test of 4.4.4. If average breaking strength does not comply with the requirements of 3.4 the first article sample shall not be approved.

4.3.3.5 Presence of wood preservative. (See 3.10), Major defect. A sample of 15 boxes shall be selected at random, from each lot, for this test. Four individual boards of each box (cleat, top or bottom board, end board, and batten) shall be subjected to the test specified in 4.4.5, 4.4.6 or 4.4.7, as applicable. If one or more boards fail to meet the applicable requirements, the box shall be classed defective. Failure of any box to comply with the requirements shall be cause for rejection of the lot.

4.3.3.6 Presence of heat treatment. (See 3.11), Major defect. A sample of 15 boxes shall be selected at random for this test. If the heat treatment marking does not comply on one or more boxes, then the lot shall be rejected. The boxes shall also be examined for the presence of pests or evidence of infestation (e.g. worm holes). Any visual obvious infestation or evidence of infestations of any box in the sample lot shall be cause for rejection.

Downloaded from http://www.everyspec.com

4.3.4 Inspection equipment. The government reserves the right to inspect the contractor's equipment and determine that he has available and utilizes correctly, measuring and test equipment of the required accuracy and precision and that the instruments are of the proper type and range to make measurements of the required accuracy. Commercial inspection equipment shall be employed where applicable for all tests and examinations specified in 4.3 and 4.4. The contractor is responsible for assuring that proper calibration procedures are followed. Government approval of all inspection equipment is required prior to its use for acceptance purposes (see 6.9).

4.3.4.1 Certification. Certification shall be provided to ensure preservative treatment used is in full conformance to the requirements of 3.10. Certification shall be provided to ensure wood material used is in full conformance with the requirements of 3.2.1

4.4 Methods of inspection. (see 6.10).

4.4.1 Load test of rope handles. The box shall be packed with any suitable material until its gross weight is twice as great as its gross weight packed with the item for which it was intended. If the resulting weight of the packed box is 250 pounds (lbs.) or less, 4.4.1.1 shall be followed. If the resulting weight is greater than 250 lbs. and not greater than 500 lbs., 4.4.1.2 shall be followed.

4.4.1.1 Rope handles load test (Boxes that weigh 250 lbs. or less). The box shall suspend freely for one minute, minimum, from each rope handle in turn. Test to be performed at max weight. In the event that one or both handles fail the requirement, the box shall be classified defective.

4.4.1.2 Rope handle load test (Boxes that weigh between 250 lbs. and 500 lbs. maximum). The box shall suspend freely for one minute, minimum, from both rope handles (at once). Test to be performed at max weight. In the event that one or both handles fail the requirement, the box shall be classed defective.

4.4.2 Moisture content. The ammunition box shall be tested in accordance with ASTM-D6199 Section 6.4.1. On each box, two readings shall be taken using different parts of the box, to include side and end cleat.

4.4.3 Rope weight. To measure length of polyethylene or polypropylene rope for the purpose of determining rope weight per foot, the sample of rope submitted shall be stretched with a load equal to 200 pounds multiplied by the diameter in inches squared. While the rope is under load, a 30 foot length shall be marked off, length measurement determined under load. Weight in pounds per foot shall be computed.

4.4.4 Rope breaking strength. The breaking strength of the five samples of polyethylene or polypropylene rope shall be determined in accordance with CI 1500-02. The average breaking strength shall be computed.

Downloaded from http://www.everyspec.com

4.4.5 Presence of PQ56 (copper -8-quinolinolate) preservative.

4.4.5.1 Primary method.

4.4.5.1.1 Materials and equipment. The materials and equipment required are as follows:

a. PQ Check (indicator): The formulation contains 10 parts by weight, of sodium diethyldithiocarbamate trihydrate (see 6.10) and 90 parts by weight of distilled water.

b. Dropper: An ordinary glass tube eye dropper may be used.

4.4.5.1.2 Test procedure. Two drops of PQ Check (indicator) shall be applied to the wood surface. An immediate dark brown coloration and the spreading of the drops shall indicate PQ56 treatment.

4.4.6 Presence of M-GARD W550 (zinc naphthenate emulsifiable) preservative.

4.4.6.1 Materials and equipment. The materials and equipment required are as follows:

a. Reagent. Dissolve 0.1 grams of dithizone (diphenylthiocarbazone) (see 6.11) in either 100 ml of methyl ethyl ketone or 100 ml of chloroform (Note: This solution may be stored for long periods of time.)

b. Eye dropper. An ordinary glass tube eyedropper may be used.

4.4.6.2 Test procedure. Five drops of the solution shall be applied to the wood surface. The indicator turns red when zinc (M-GARD W550) is present. The color green indicates that the preservative is not present. Both colors fade quickly in the presence of light.

4.4.7 Presence of M-GARD W510 (copper naphthenate emulsifiable) or Cunapsol 5 (copper naphthenate) preservative. The materials and equipment required are as follows:

a. Reagent. Disolve 0.5 grams chrome azurol “s” concentrate (see 6.11) and 5.0 grams sodium acetate in 80 ml of distilled water and then dilute further to 500 ml total with distilled water.

b. Sprayer. A common manual (fly) type applicator shall be used.

4.4.7.1 Test procedure. Spray the solution over the surface of dried treated wood. A deep blue color reveals the presence of copper (from copper naphthenate)

Downloaded from http://www.everyspec.com

4.4.8 Presence of heat treatment. Visually inspect the heat treatment marking on each of the boxes for conformance to the applicable requirements, including content, legibility and location.

5. PACKAGING

5.1 Packaging. For acquisition purposes, the packaging requirements shall be as specified in the contract or order (see 6.2). When packaging of materiel is to be performed by DoD or in-house contractor personnel, these personnel need to contact the responsible packaging activity to ascertain packaging requirements. Packaging requirements are maintained by the Inventory Control Point's packaging activities within the Military Service or Defense Agency, or within the military service's system commands. Packaging data retrieval is available from the managing Military Department's or Defense Agency's automated packaging files, CD-ROM products, or by contacting the responsible packaging activity.

6. NOTES

(This section contains information of a general or explanatory nature that may be helpful, but is not mandatory.)

6.1 Intended use. Items covered by this specification are intended for use in packaging of military items and it has no commercial application.

6.2 Acquisition requirements. Procurement documents should specify the following:

6.2.1 Procurement requirements:

a. Title, number and date of this specification.

b. Type, class and grade of box.

c. Drawing number of box.

d. Gross weight of packed box.

e. Assembled or knocked down form.

f. Palletization requirements.

g. Provisions for submission of first article samples.

6.2.2 Contract data requirements. Contract data requirements for inspection equipment designs (conforming to Data Item Description DI-R-1714 tailored). See 6.8.

Downloaded from http://www.everyspec.com

6.2.3 Packing. Boxes should be shipped completely assembled unless otherwise specified. When knocked down (KD) boxes are specified, all panels for each individual box should be strapped or bundled together. Hardware and nails may be shipped in separate, clearly labeled containers (see 1.3).

6.2.4 Palletization. When palletization is required, commercial wood pallets or skid bases may be used unless otherwise specified. Overseas shipments should not exceed 54 inches in height. Domestic shipments should not exceed 60 inches in height.

6.2.5 Strapping. Assembled boxes should be stacked on the pallet with all box cleats in the same direction; the top layer of boxes should be inverted. The pallet should be strapped with a minimum of two straps placed inside and adjacent to the skids, when the box length and pallet width are equal. When more than one box is placed at right angles to the first two straps around the outside stacks of boxes. Strapping should be a minimum of 3/4 inch wide by .028 inch thick, Type I regular-duty, in accordance with ASTM D3953. Finish A, B, or C is required for overseas shipment. Finish D may be used for domestic shipment

6.2.6 Strapping of knocked down (KD) boxes. Boxes in knocked down form should be stacked on pallets in a manner that will form a stable load. Strapping should be in accordance with ASTM-D3953, ¾ inch by .028 inch thick, Type 1 regular-duty. Finish B is required for overseas shipments. Finish A or C may be used for domestic shipments. Seals should be compatible with strapping.

6.2.7 Marking. Box identification marking should be in accordance with 3.8 of this specification. No other marking should be placed directly on the boxes unless specifically required by the contract. Marking for shipment should be in accordance with MIL-STD-129.

6.3 Transportation. Packing boxes covered by this specification are intended for shipment by common carrier of artillery ammunition, ammunition components, bombs, bomb accessories, demolition materials, special weapons components, and cartridge activated devices.

6.4 Splits. Splits should be construed to apply to the entire side, top, bottom, or end when the piece is constructed of a single board. When the piece consists of two or more boards, as permitted in 3.2.2, splits should be construed to apply to each board from which the piece is made.

6.5 Decay. Is disintegration of wood due to action of fungi. In the shop, decay can be best detected and differentiated from harmless strains and discoloration by use of the pick test. The pick test is performed with a knife or chisel by lifting some of the grain or fibers in suspicious looking areas. If the material is punky or more brash (breaks without splintering) than healthy wood of the same species, it is probably decayed. Suspicious areas usually abnormally brown, bleached looking or mottled and indicated by the absence of luster that is present in normal wood.

Downloaded from http://www.everyspec.com

6.6 Sources. One source of satisfactory type of knurled or screw type wire with driving equipment is Auto-nailer Company, 267 Mariette N.W., Atlanta, Ga.

6.7 PQ-56. For the 1.8 percent copper-8-quinolinolate solution, may be obtained from the Chapman Chemical Company, P.O. Box 9158, Memphis, Tn 38019 or equivalent facility.

6.7.1 Alternate method.

6.7.1.1 Materials and equipment. The material and equipment required are as follows:

a. Reagent. Dissolve 0.5 grams chrome azurol "S" concentrate (see 6.11) and 5.0 grams sodium acetate in 80 ml of distilled water and then dilute further to 500 ml total with distilled water.

b. Sprayer. A common manual (fly) sprayer type applicator should be used.

6.7.1.2 Test procedure. Spray solution over surface of dried wood. A deep blue color reveals the presence of copper (from the copper-8- quinolinolate).

6.8 M-GARD W550 (zinc hydronap) For the 3 percent zinc as metal solution, may be obtained from the Mooney Chemicals Inc., 2301 Scranton Road, Cleveland, Ohio 44113-9988 or equivalent facility.

6.9. Inspection equipment design. Design responsibility for inspection equipment is assigned to the contractor.

6.9.1 Contractor designs. Contractor designs are required for all inspection equipment and may include commercial equipment which the contractor proposes to use. (Commercial equipment is defined as unmodified equipment which is cataloged and available for purchase by the general public). Contractor designs should include appropriate operating instructions, calibration procedures and maintenance procedures. Commercial equipment should be fully described by catalog listings or other means which provide sufficient information to permit identification and evaluation by the Government and may include illustrations and engineering data. Designs should be prepared for any special fixture(s) required to be used with commercial equipment. Designs should be of the category and form (per MIL-D-1000) specified in the Contract Data Requirements Lists (DD Form 1423). The item detail specification number, paragraph number, and defect number form Section 4 should be referenced on each contractor design together with the component or assembly drawing number, revision letter and date to which the specific design applies.

6.9.2 Submission of designs for approval. Contractor designs should be approved by the Government prior to fabricating or procuring the equipment. Designs should be

Downloaded from http://www.everyspec.com

submitted for approval in accordance with the stipulations, time frame and distribution specified in the Contract Data Requirements Lists (DD Form 1423) or in the contract. Partial submission of inspection equipment designs is permissible and encouraged. However, the completion date for design review will be based on the date of the final submission of designs and the required delivery schedule as stipulated in the contract. The specific segment of the U.S. Army Armament, Munitions and Chemical Command to which the Contractor designs should be sent will be specified in the item detail specification. When the contractor submits inspection equipment designs to the Government for approval he should give the following information in his letter of transmittal:

a. The contract number

b. The contract item (name, model number, etc.)

c. The designs remaining to be submitted and the expected date of submittal

Submit equipment designs, as required, to Commander, U.S. Army Armament, Research, Development and Engineering Center (ARDEC) ATTN: AMSRD-AAR-QEM-A, Picatinny, New Jersey 07806-5000

6.10 Equivalent test method. Prior approval of the contracting officer is required for use of equivalent test methods. A description of the proposed method should be submitted through the Contracting Officer to: Commander, U.S. Army Armament, Research, Development and Engineering Center, ATTN: AMSRD-AAR-QEM-A, Picatinny, New Jersey 07806-5000. This description should include but not be limited to the accuracy and precision of the method, test data demonstrating the accuracy and precision and drawings of any special equipment required.

6.11 Suggested sources.

a. Sodium diethyldithiocarbamate trihydrate may be obtained from J.T. Baker Chemical Co., Phillipsburg, New Jersey 08865 or equivalent facility.

b. Chrome azurol “S” may be obtained from Eastman Chemical Co., Rochester, New York or equivalent facility.

c. Dithizone (diphenylthiocarbazone) may be obtained from J.T. Baker Chemical Co., Phillipsburg, New Jersey 08865 or equivalent facility.

6.12 Definitions. Knocked Down (KD) Boxes – Boxes in shook form with cleated panels assembled and rope handles in place. Hardware and nails required to assemble the boxes should be included unless otherwise specified in the contract or order (see 6.1.1 and 6.2).

Downloaded from http://www.everyspec.com

6.13 Changes from previous issue. The margins of this specification are marked with vertical lines to indicate where changes from the previous issue were made. This was done as convenience only and the Government assumes no liability whatsoever for any inaccuracies in these notations. Bidders and contractors are cautioned to evaluate the requirements of this document based on the entire content irrespective of the marginal notations and relationship to the last previous issue.

6.13.1 Amendment overview of changes. This change incorporates R14B2010 which allows the usage of electronic moisture meters for the moisture content verifications.

6.14 Subject term (key word) listing.

Cleats
Dithizone
M-GARD
PQ56
Splits
Strapping

Downloaded from http://www.everyspec.com

FIGURE 1. Wood box exterior vertical cleats

Downloaded from http://www.everyspec.com

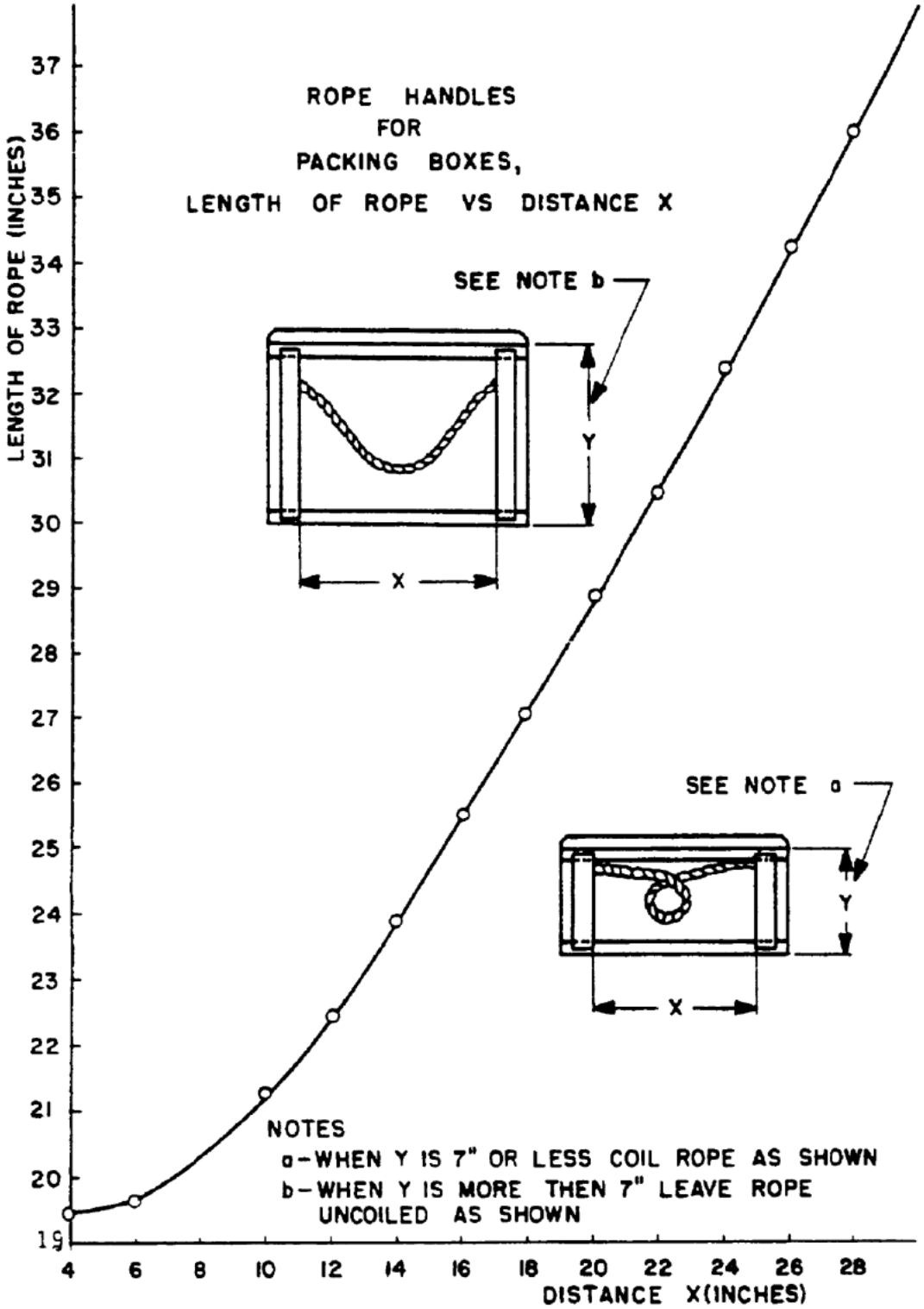

FIGURE 1A. **Length of Rope Vs. Distance X Chart**

Downloaded from http://www.everyspec.com

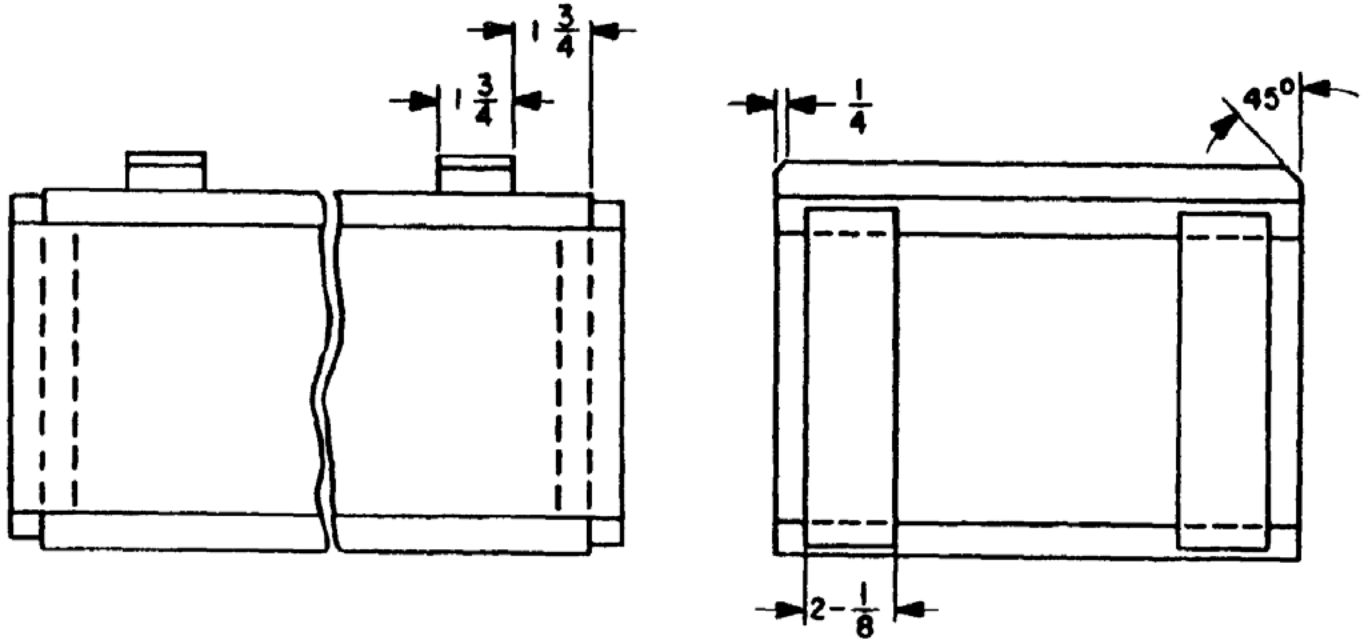

NOTES:

A = SEE FIGURE 1 FOR CONSTRUCTION OF BOX.
B = TYPE 1, CLASS 1, ALL WOOD SHALL BE 11/16 MIN. THICK.
C = TYPE 1, CLASS 3 TOP, TOP CLEATS, SIDES AND BOTTOMS 1/2 INCH THICK, ENDS AND END CLEATS 11/16 MIN. THICK.

FIGURE 2. Type I, Class 1 Box, Type I, Class 3 Box

Downloaded from http://www.everyspec.com

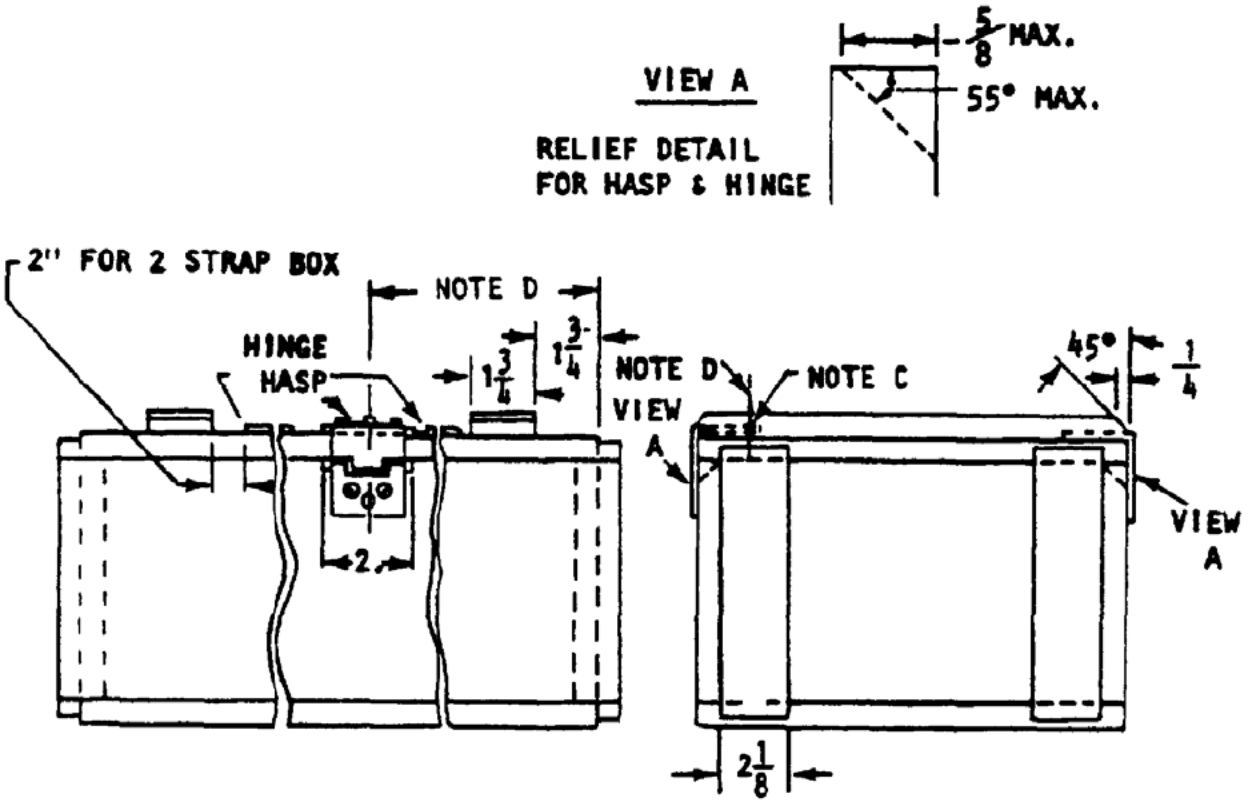

NOTES:

A - SEE PAR. 3.4 FOR HARDWARE REQUIREMENTS
B - UNLESS OTHERWISE SPECIFIED ALL WOOD SHALL BE 11/16 MIN. THICK.
C - SWIVEL ASSEMBLY LENGTH TO BE PARALLEL WITH GRAIN OF WOOD IN COVER.
D - ℄ OF SWIVEL LOCATED SO THAT HASP PASSES TIGHTLY OVER SWIVEL.
E - SEE FIGURE 1 FOR CONSTRUCTION OF BOX.
F - LOCATED AT ℄ OF BOX FOR 2 STRAP BOX. LOCATED 1 1/2 FROM ℄ OF BOX FOR 1 STRAP OR THREE STRAP BOX.
G - ONE HASP AND HINGE MAY BE USED ON BOXES 18 INCHES OR LESS INSIDE LENGTH DIMENSION (1).

(1) WHEN ONE HINGE IS USED IT SHALL BE PLACED DIRECTLY BEHIND HASP.

FIGURE 3. Type I, Class 2 Box

Downloaded from http://www.everyspec.com

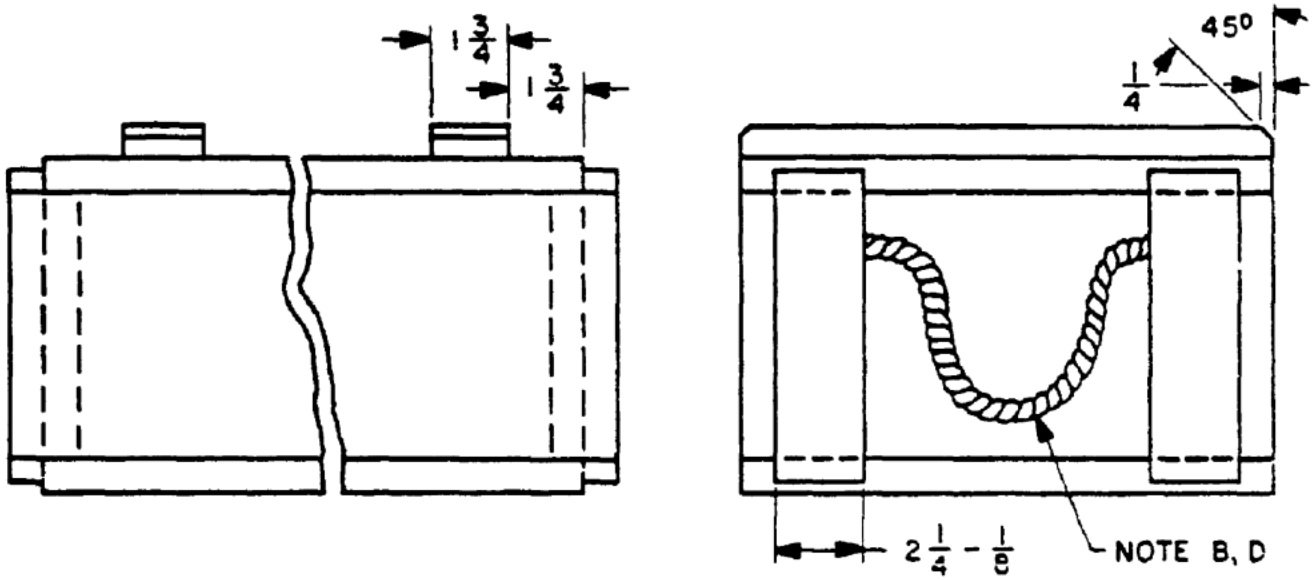

NOTES:

A - SEE FIGURE 1 FOR CONSTRUCTION OF BOX.
B - SEE FIGURE 1 FOR VIEW OF ROPE HANDLE.
C - UNLESS OTHERWISE SPECIFIED ALL WOOD SHALL BE 11/16 MIN. THICK.
D - SEE PAR. 3.3 FOR ROPE HANDLE REQUIREMENTS. SEE FIGURE 1A FOR LENGTH OF ROPE HANDLE

FIGURE 4. Type II Class 1 Box

Downloaded from http://www.everyspec.com

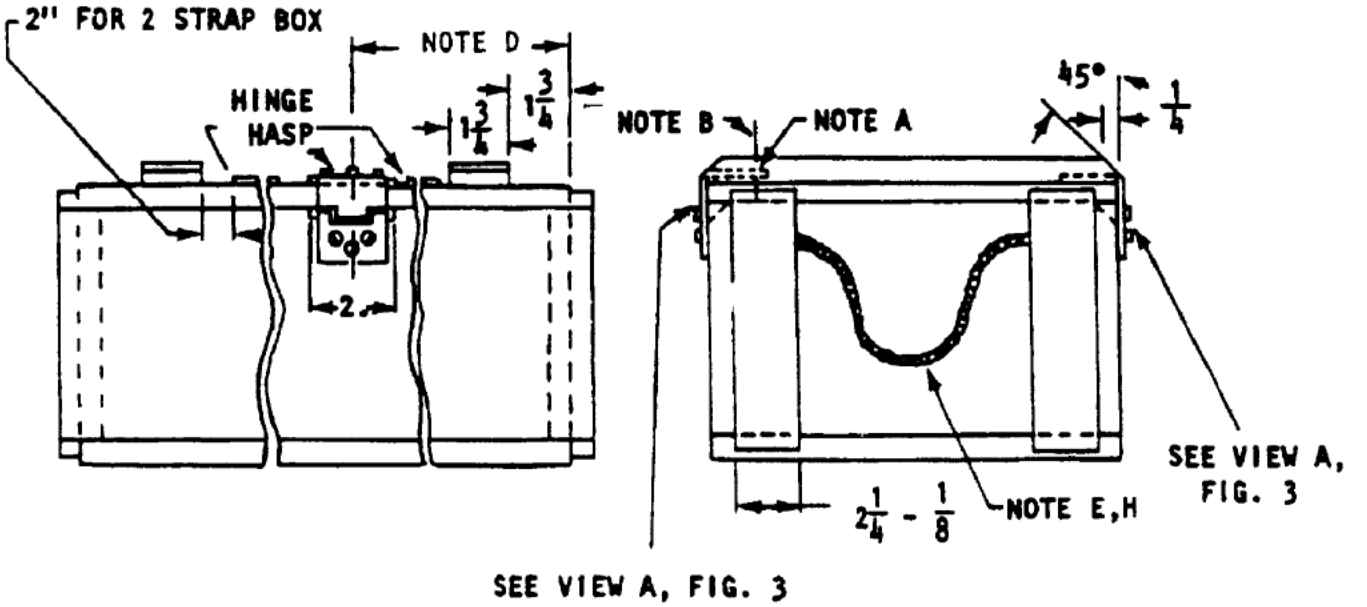

NOTES:

A - SWIVEL ASSEMBLY LENGTH TO BE PARALLEL WITH GRAIN OF WOOD IN COVER.
B - ℄ OF SWIVEL LOCATED SO THAT HASP PASSES TIGHTLY OVER SWIVEL.
C - SEE FIGURE 1 FOR CONSTRUCTION OF BOX.
D - LOCATED AT ℄ OF BOX FOR 2 STRAP BOX. LOCATED 1 1/2 FROM ℄ OF BOX FOR 1 STRAP OR THREE STRAP BOX.
E - SEE FIGURE 1 FOR VIEW OF ROPE HANDLE
F - SEE PAR. 3.4 FOR HARDWARE REQUIREMENTS.
G - UNLESS OTHERWISE SPECIFIED ALL WOOD SHALL BE 11/16 MIN. THICK.
H - SEE PAR. 3.3 FOR ROPE HANDLE REQUIREMENTS. SEE FIGURE 1A FOR LENGTH OF ROPE HANDLE
I - ONE HASP AND HINGE MAY BE USED ON BOXES 18 INCHES OR LESS INSIDE LENGTH DIMENSION (1)

(1) WHEN ONE HINGE IS USED IT SHALL BE PLACED DIRECTLY BEHIND HASP.

FIGURE 5. Type II, Class 2 Box

Downloaded from http://www.everyspec.com

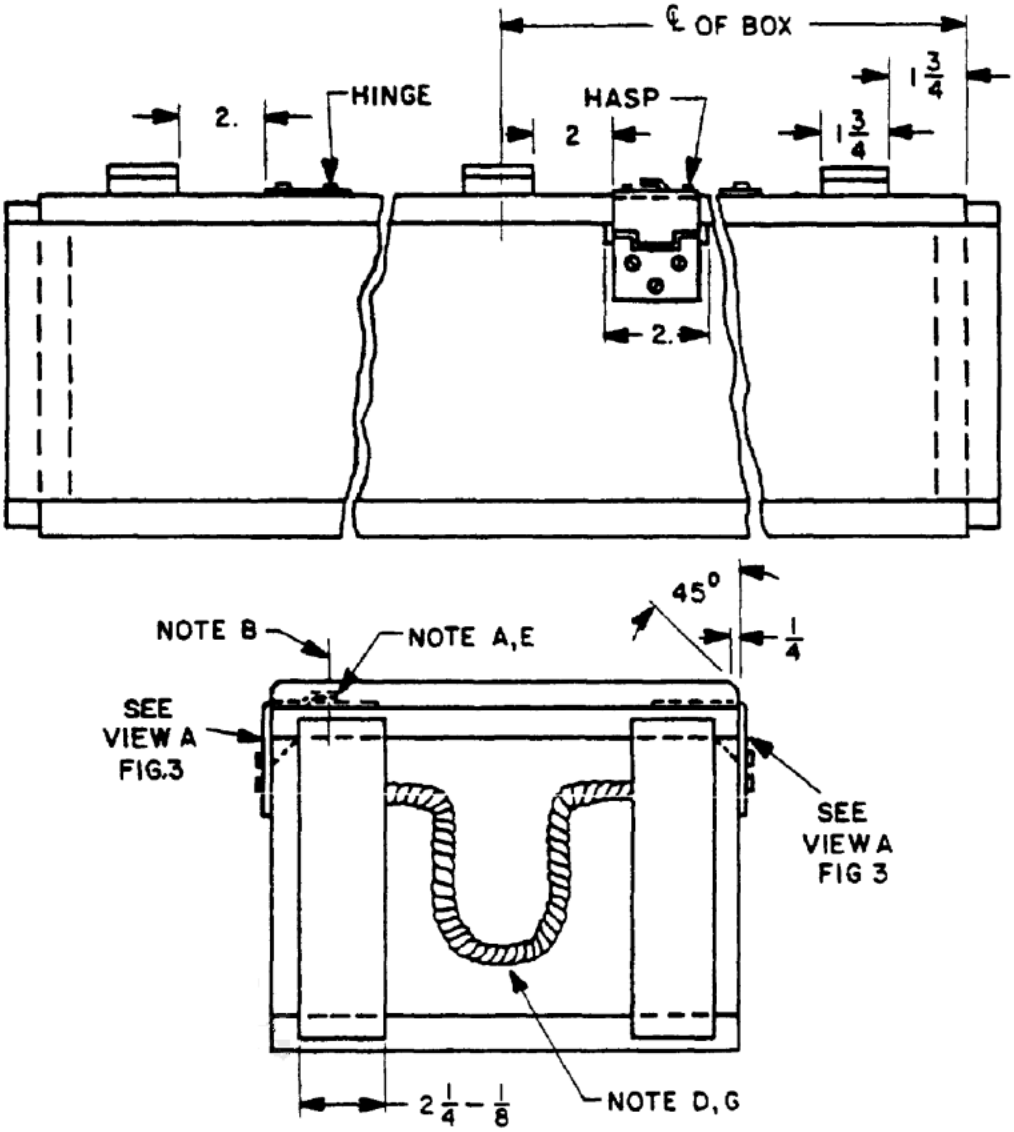

NOTES:

A - SWIVEL ASSEMBLY LENGTH TO BE PARALLEL WITH GRAIN OF WOOD IN COVER.
B - ℄ OF SWIVEL LOCATED SO THAT HASP PASSES TIGHTLY OVER SWIVEL.
C - SEE FIGURE 1 FOR CONSTRUCTION OF BOX.
D - SEE FIGURE 1 FOR VIEW OF ROPE HANDLE.
E - SEE PAR. 3.4 FOR HARDWARE REQUIREMENTS.
F - UNLESS OTHERWISE SPECIFIED ALL WOOD SHALL BE 11/16 MIN. THICK.
G - SEE PAR. 3.3 FOR ROPE HANDLE REQUIREMENTS. SEE FIGURE 1A FOR LENGTH OF ROPE HANDLE.

FIGURE 6. Type II, Class 3 Box

Downloaded from http://www.everyspec.com

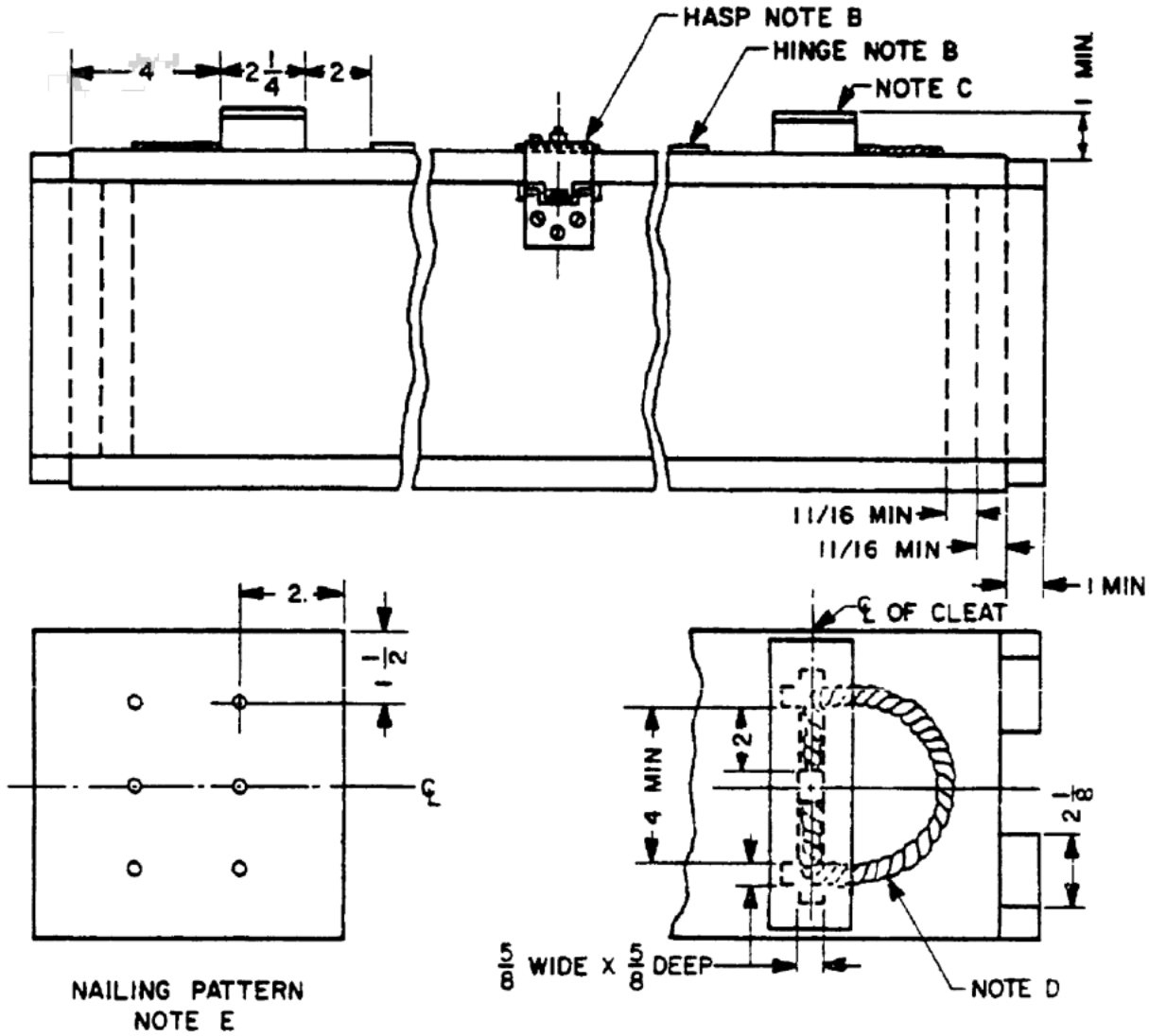

NOTES:
A - ALL LUMBER SHALL BE 11/16 MIN. EXCEPT AS NOTED.
B - ATTACH HARDWARE AS SHOWN ON FIGURE 5 FOR 2 STRAP BOX (SEE PAR. 3.4 FOR HARDWARE REQUIREMENTS).
C - BEVEL TOP CLEATS AS SHOWN ON FIGURE 5.
D - LENGTH 17 1/2 (SEE PAR. 3.3 AND FIGURE 1 FOR ADDITIONAL DETAILS)
E - FOR ADDITIONAL DETAILS OF DOUBLE END CONSTRUCTION, SEE FIGURE 8.
F - ONE HASP AND HINGE MAY BE USED ON BOXES 18 INCHES OR LESS INSIDE LENGTH DIMENSION (1).

(1) WHEN ONE HINGE IS USED IT SHALL BE PLACED DIRECTLY BEHIND HASP.

FIGURE 7. Type II, Class 4 Box

Downloaded from http://www.everyspec.com

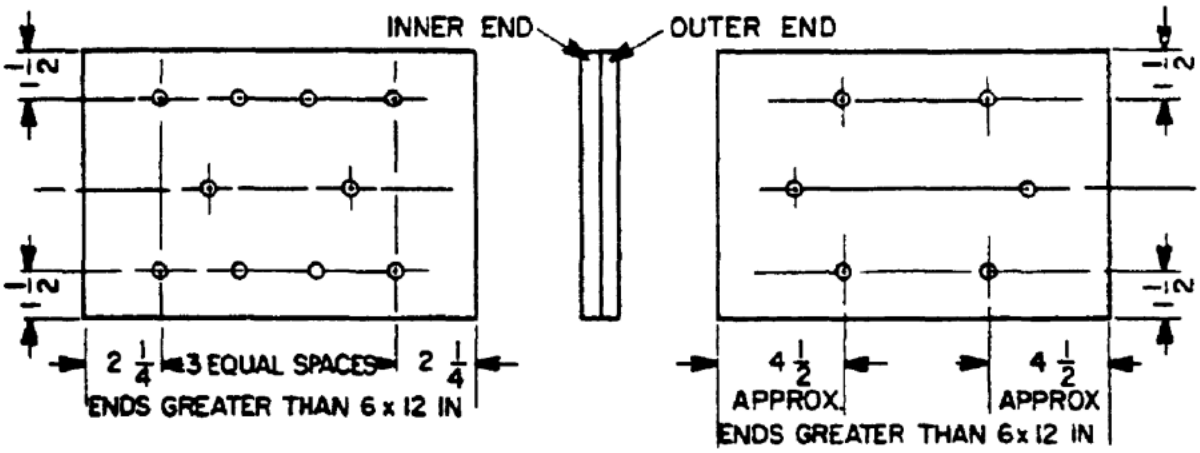

NAILING PATTERN FOR DOUBLE END-CLEAT CONSTRUCTION

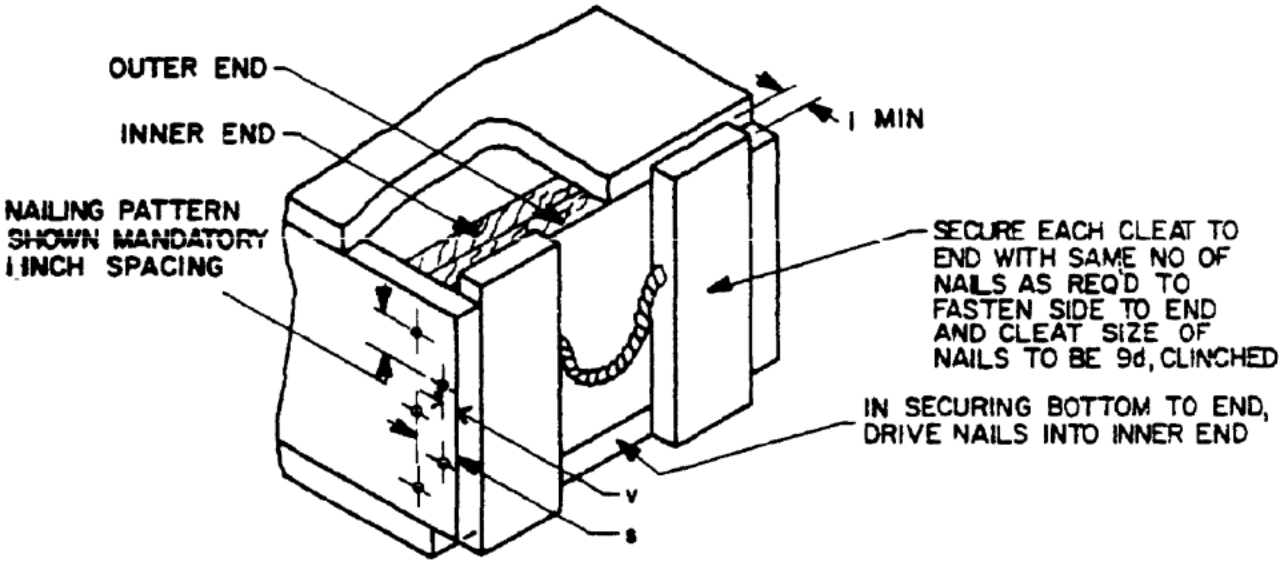

NOTES:

A - INNER END SHALL BE ONE PIECE: UNJOINTED WITH GRAIN PARALLEL WITH WIDTH OF BOX. OUTER END SHALL BE NOT MORE THAN 2 PIECES OF APPROXIMATELY EQUAL WIDTH, WITH GRAIN PARALLEL WITH DEPTH OF BOX. NAILS SHALL BE DRIVEN THROUGH OUTER END AND CLINCHED ON INNER END. NAIL SIZE SHALL BE 6d. LOCATION OF NAILS IS APPROXIMATE: STAGGER OFF CENTERS TO PREVENT SPLITTING.

B - FOR ADDITIONAL DETAILS OR CONSTRUCTION, SEE FIGURES 1 AND 6. WHEN COVER IS 33 INCHES OR MORE IN LENGTH THREE COVER CLEATS SHALL BE USED. OTHERWISE TWO COVER CLEATS SHALL BE USED.

O - SEE PARA. 3.3,FIGURES 1 and 1A FOR ROPE HANDLE REQUIREMENTS.

V - 1/2 THICKNESS OF CLEAT.

S - THICKNESS OF CLEAT PLUS 1/2 THICKNESS OF OUTER END PANEL.

FIGURE 8. Type II, Class 5 Box

Downloaded from http://www.everyspec.com

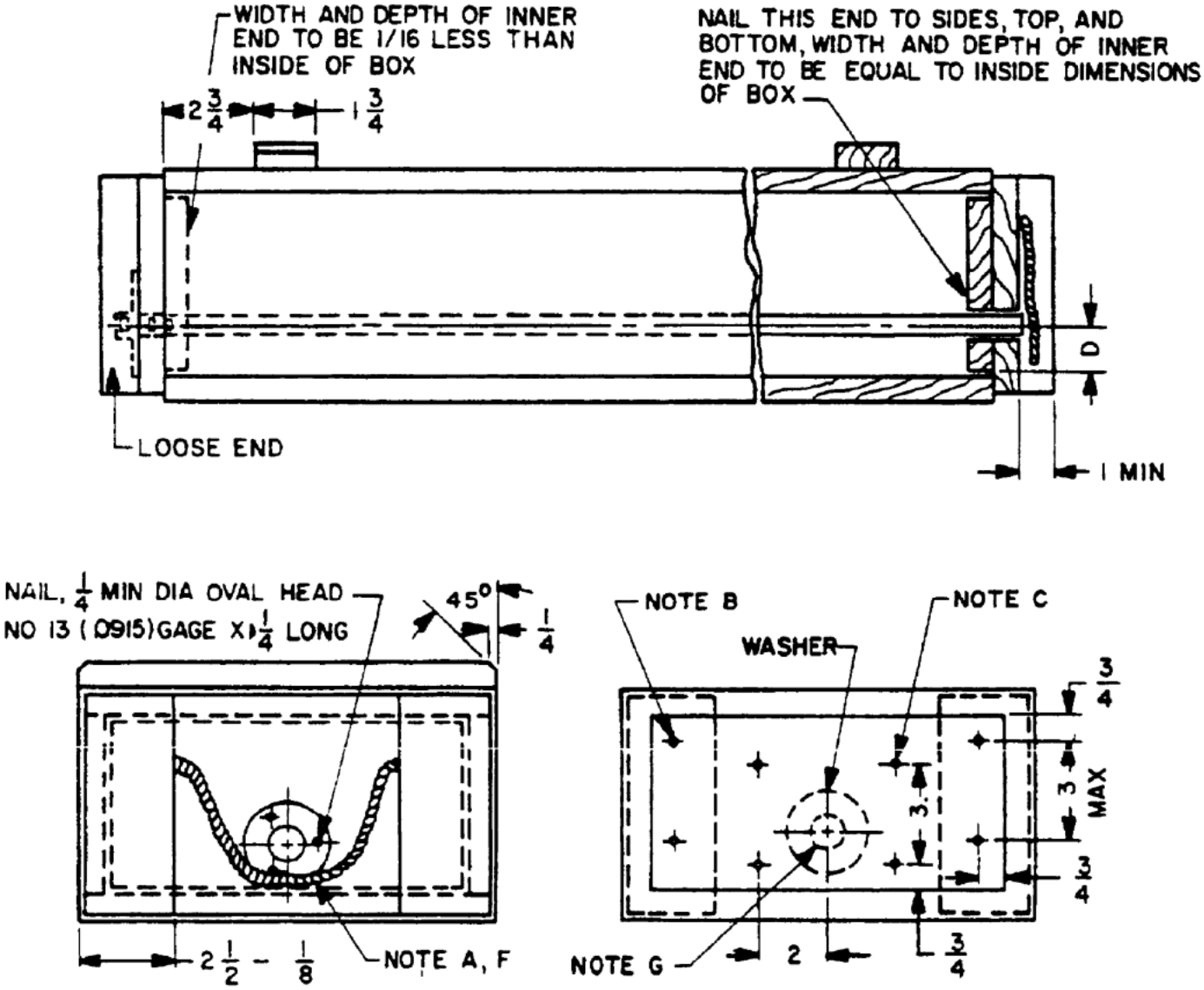

NOTES:

A - SEE FIGURE 1 FOR VIEW OF ROPE HANDLE AND ADDITIONAL NAILING
B - 4-6d NAILS, THROUGH INNER AND OUTER PIECES, INTO CLEATS.
C - 4-6d NAILS, THROUGH INNER AND OUTER PIECES, CLINCHED ON INTERIOR SURFACES.
D - DIMENSION TO BE FURNISHED BY APPLICABLE DRAWING.
E - ALL LUMBER SHALL BE 11/16 MIN. INCH THICK EXCEPT AS NOTED.
F - SEE PAR. 3.3 FOR ROPE HANDLE REQUIREMENTS. SEE FIGURE 1A FOR LENGTH OF ROPE HANDLE.
G - DIMENSIONS OF HOLE TO BE FURNISHED BY APPLICABLE DRAWING.

FIGURE 9. Type III, Class 1 Box

Downloaded from http://www.everyspec.com

APPENDIX (A)

BOX, AMMUNITION PACKING: WOOD, NAILED

A1. SCOPE. This appendix covers closing and strapping requirements and inspection provisions for filled nailed wood ammunition packing boxes. This appendix is a mandatory part of the specification.

A2 APPLICABLE SPECIFICATIONS AND DRAWINGS

A2.1 General. The documents listed in this section are needed to meet the requirements specified in sections A3 and A4 of this specification appendix. This section does not include documents in other sections of this specification or recommended for additional information or as examples. While every effort has been made to assure the completeness of this list, document users are cautioned that they must meet all requirements cited in sections A3 and A4 of this specification, whether or not they are listed.

A2.2 Government documents.

A2.2.1 Other Government documents, drawings and publications. The following other Government documents, drawings, and publications form a part of this document to the extent specified herein. Unless otherwise specified, the issues of these documents are those cited in the solicitation or contract.

U.S. ARMY ARMAMENT RESEARCH AND DEVELOPMENT CENTER (ARDEC), DRAWINGS

8794342	-	Seal Metallic
8796522	-	Marking Diagram and Sealing Wood Packing Boxes.

(Copies of these drawings may be requested online at Drawing-Request@pica.army.mil or from US Army ARDEC, ATTN: AMSRD-AAR-AIS-T, Picatinny, NJ 07806-5000.)

A2.3 Non-government publications. The following documents form a part of this document to the extent specified herein. Unless otherwise specified, the issues of the documents are those cited in the solicitation or contract.

AMERICAN SOCIETY FOR TESTING AND MATERIALS

ASTM - E8	-	Standard Test Method for Tension Testing of Metallic Materials,

Downloaded from http://www.everyspec.com

(Copies of ASTM standards are available online from http://www.astm.org/ and from American Society for Testing and Materials, 100 Barr Harbor Drive, West Conshohocken, PA 19428-2959.)

A2.4 Order of precedence. In the event of a conflict between the text of this specification and the references cited herein, the text of this specification take precedence. Nothing in this document, however, supersedes applicable laws and regulations unless a specific exemption has been obtained.

A3 REQUIREMENTS

A3.1 Closing

A3.1.1 Boxes without hardware. For overseas (Level A) use boxes without hardware shall have lids nailed in place. Nailing shall be the same as that required for the bottom. For domestic (Level B or C) use nailing of the covers is not required. Two nails, placed in diagonally opposite corners, may be used to locate and hold the cover while the strapping is applied.

A3.1.2 Boxes with hardware. Boxes with hardware shall be closed in accordance with Sealing Instructions on Drawing 8796522 using metallic seals complying with Drawing 8794342. Metallic seals are required on all overseas (Level A) packs. Metallic seals are not required for domestic (Level B or C) use except for LCL and LTL shipments. However, hasps and swivels shall be secured with wire when metallic seals are not used.

A3.1.3 Interplant Reuse. When boxes without hardware are specified for domestic (Level B or C) use and reuse is intended boxes with hardware may be substituted. Two hinges on boxes less than 18 inches inside length may be used. Strapping of individual boxes in not required for full carload or truckload shipments.

A3.2 Strapping. All boxes shall be strapped with the strapping being applied over the sides, top and bottom in accordance with Drawing 8796522. Unless otherwise specified boxes less than 18 inches in overall length shall have one strap, boxes 18 to 36 inches in length shall have two straps and boxes 36 inches in length shall have three straps. Strapping shall be either round wire or flat steel as specified below. Boxes requiring one strap shall have the strap placed at the center of the box or adjacent to the hasp when hardware is used. Boxes requiring two straps shall have the straps placed just inside the cover cleats or between the cover cleats and the hinges when hardware is used. Boxes requiring three straps shall have two straps placed as described for the two straps and the third strap placed as described for a one strap box. When a center cover cleat is required the third strap shall be placed between the cleat and the hasp.

A3.2.1 Flat steel strapping. Flat steel strapping shall comply with Type 1 or 2, Regular-duty of ASTM-D3953. 5/8 inch by 0.020 inch, Finish B (Galvanized), Grade 2, Type 1, is required for items issued to the field and/or shipped OCONUS (Level A or B); Finish A (Organic) may be used for CONUS shipments (Level C). Strap positions and

Downloaded from http://www.everyspec.com

marking scheme shall be planned out ahead of time so that the strapping does not interfere with box marking. The size of strapping shall be 5/8 inch by 0.020 inch for all boxes except Type I, Class 3. Not less than two straps, 3/8 inch by .015 inch, shall be used for Type I, Class 3 boxes. Alternatively, for domestic use (Level B or C), nonmetallic strapping, ½ inch by .020 inch, complying with Type II or IV ASTM D 3950, may be used on all boxes. Strapping shall be joined with commercial connectors of the size and kind designed for the strapping being used.

A3.2.2 Round Wire Strapping. Round wire strapping of any gage listed in Table II of this Appendix and meeting the requirements of the Table may be used. Wire finish shall be organic-coated or zinc-coated for overseas shipment (Level A); any finish may be used for domestic shipment (Level B or C)

A4. VERIFICATION

A4.1 Round wire strapping. The strapping used will have passed the nominal diameter, breaking strength, percent elongations, and zinc coating tests. The zinc coating is only required for Type 1 material. Authentication by proper certification from the ammunition packing facility will be available for review by the Government

A4.2 Packed boxes.

A4.2.1 Lot formation. A lot will consist of packed, strapped, marked and sealed ammunition boxes produced by
one manufacturer in one unchanged process in accordance with the same drawing and same drawing revision. Lot size shall coincide with lot size of the ammunition being packed.

A4.2.2 Examination. Sampling plans and procedures for Major and Minor defects shall be in accordance with MIL-STD-1916 except that continuous sampling plans may be used if approved by the procuring activity.

Downloaded from http://www.everyspec.com

APPENDIX A

Conformance inspection by classification of characteristics

PARAGRAPH A4.2.2.1	TITLE Marked, sealed and strapped wooden packing box		SHEET 1 OF 2	DRAWING NUMBER see dwg. 8796522(See note 1) NEXT HIGHER ASSEMBLY
CLASSIFICATION	**EXAMINATION OR TEST**	**CONFORMANCE CRITERIA**	**REQUIREMENT PARAGRAPH**	**INSPECTION METHOD REFERENCE**
Critical	None defined			
Major				
101	Box damaged	Level IV	3.3	Visual
102	Strapping, missing, broken, loose or improperly attached (when specified)	Level IV	A3.2/A3.2.1/A3.2.2	Visual
103	Metallic seal missing or improperly attached (when specified)	Level IV	A3.1.2	Visual
104	Hasps and swivels improperly secured (when specified)	Level IV	3.5/3.8.1	Visual
105	Handles missing, broken or loose (when specified)	Level IV	3.4	Visual
106	Hardware missing, broken or loose (when specified)	Level IV	3.5/3.8.1	Visual
107	Missing, incorrect or unidentifiable Ammunition lot number or NSN	Level IV	See (*)	Visual

*. See applicable markings indicated by the contract
Note 1. See also pertinent packed ammunition item dwg

Downloaded from http://www.everyspec.com

Conformance inspection by classification of characteristics

PARAGRAPH A4.2.2.1	TITLE Marked, sealed and strapped wooden packing box		SHEET 2 OF 2	DRAWING NUMBER see dwg. 8796522 (See Note 1) NEXT HIGHER ASSEMBLY
CLASSIFICATION	**EXAMINATION OR TEST**	**CONFORMANCE CRITERIA**	**REQUIREMENT PARAGRAPH**	**INSPECTION METHOD REFERENCE**
Minor				
201	Content loose	Level II	See (**)	Manual
202	Lid nailing pattern incorrect	Level II	A3.1.1/3.7.3	Visual
203	Marking (other than ammunition lot number or NSN) missing, incomplete or unidentifiable	Level II	3.9	Visual
204	Strapping, improperly located	Level II	A3.2	Visual
205	Handles improperly assembled (when specified)	Level II	3.4	Visual
206	Hardware improperly assembled (when specified)	Level II	3.5/3.8.1	Visual

**. See applicable packing instructions indicated by the contract
Note 1. See also pertinent packed ammunition item dwg

Downloaded from http://www.everyspec.com

APPENDIX B

BOX, AMMUNITION PACKING: WOOD, NAILED
(GOVERNMENT FURNISHED)

B1. SCOPE

B1.1 This appendix prescribes the criteria to be utilized to determine the serviceability of Government furnished boxes. This appendix is a mandatory part of the specification.

B1.2 Classification

B1.2.1 Types, classes and grades. This appendix covers the following types, classes and grades of box designs. (See Table IV, V and VI)

Table IV. Type I - Top opening without rope handles

Class 1	Without hardware, with two cover cleats, See Figure 2.
Class 2	With hardware, with two cover cleats, See Figure 3.
Class 3	Without hardware, with two cover cleats, light construction. See Figure 2.

Table V. Type II - Top opening with two rope handles

Class 1	Without hardware, with two cover cleats. See Figure 4.
Class 2	With hardware, with two cover cleats. See Figure 5.
Class 3	With hardware, with three cover cleats. See Figure 6.
Class 4	With hardware, with rope handles on cover cleats with double end construction. See Figure 7.
Class 5	With hardware, with double end construction. See Figure 8.

Downloaded from http://www.everyspec.com

Table VI. Type III - End opening with two rope handles

Class 1	With carriage bolt hardware, with two cover cleats and double end construction. See Figure 9.
Grade A	Preservative treated boxes for the unrestricted shipment, storage and handling of ammunition or explosive ammunition components.
Grade C	Boxes primarily for interplant shipment and for storage and handling under controlled conditions or ammunition or explosive ammunition components

B2 REQUIREMENTS

B2.1 Workmanship. Boxes shall be free of imperfections which may affect their utility. In addition, the boxes shall be free of excessive splinters, metal projections, or sharp edges which may cause injury when manually handled (see B 4.2)

B3 VERIFICATION

B3.1 Lot formation. The term "lot" as used throughout this specification refers to an inspection lot, which is defined as an essentially homogeneous collection of units of product from which a representative sample is drawn and inspected to determine conformance of the lot with applicable requirements. Inspection lots shall comply with MIL-STD-1916.

B3.2 Examination. Inspection for critical defects, (and major defects, when so specified) shall be 100 percent. Sampling plans and procedures for major and minor defects shall be in accordance with MIL-STD-1916.

B3.2.1 Assembly (see applicable drawing)

Downloaded from http://www.everyspec.com

Conformance inspection by classification of characteristics

PARAGRAPH B3.2.1	TITLE Assembly					SHEET 1 OF 2	DRAWING NUMBER See applicable drawing / NEXT HIGHER ASSEMBLY
CLASSIFICATION	Grade A		Grade C	EXAMINATION OR TEST	CONFORMANCE CRITERIA	REQUIREMENT PARAGRAPH	INSPECTION METHOD REFERENCE
Major							
101	x		x	Nail protruding inside box	Level IV	3.8.1	Visual
102	x			Split terminating in edge of board	Level IV	3.3.2	Visual
103	x		x	Nail not clinched	Level IV	3.8.1	Visual
104	x		x	Box deformed	Level IV	B2.1/3.8.1	Visual
105	x		x	Holes not sufficiently separated	Level IV	3.3.3	Visual
106	x		x	Contamination from explosive material or grease on interior	Level IV	3.8.1	Visual

Downloaded from http://www.everyspec.com

Conformance inspection by classification of characteristics

PARAGRAPH B3.2.1	TITLE Assembly					SHEET 2 OF 2	DRAWING NUMBER See applicable drawing / NEXT HIGHER ASSEMBLY
CLASSIFICATION	Grade A		Grade C	EXAMINATION OR TEST	CONFORMANCE CRITERIA	REQUIREMENT PARAGRAPH	INSPECTION METHOD REFERENCE
Minor							
201	x		x	Hardware insecure	Level II	3.8.1	Manual
202	x		x	Loose screw or screw not properly seated	Level II	3.8.1	Visual/Manual
203	x		x	Incorrect seating or operation of top	Level II	3.8.1	Visual/Manual
204	x		x	Handle missing, broken, or loose	Level II	3.4	Visual/Manual
205	x		x	Nail protruding outside box	Level II	3.8.1	Visual
206	x		x	Split in board	Level II	3.3.2	Visual
207	x		x	Nail missing	Level II	3.7.3	Visual
208	x		x	Nail bent on box surface	Level II	3.8.1	Visual
209	x		x	Protective coating damaged	Level II	3.5	Visual
210			x	Split terminating in edge of board	Level II	3.3.2	Visual
211			x	Hardware rusted	Level II	B2.1/3.5	Visual

Downloaded from http://www.everyspec.com

APPENDIX B

B4 NOTES

(This section contains information of a general or explanatory nature that may be helpful, but is not mandatory.)

B4.1 Intend use Items covered by this specification are intended for use in packaging of military items and it has no commercial application.

B4.2 Rework boxes. If economically repairable, and only under specific direction from the procuring contracting officer, boxes should be reworked to comply with the applicable requirements of this document.

Custodian:	Preparing activity
Army – AR	Army – AR
	(Project 8140-2015-003)

NOTE: The activities listed above were interested in this document as of the date of this document. Since organizations and responsibilities can change, you should verify the currency of the information above using the ASSIST Online database at https://assist.dla.mil.