Downloaded from http://www.everyspec.com

INCH - POUND

MIL-DTL-21097G
11 October 2007
SUPERSEDING
MIL-DTL-21097F
18 August 2005

DETAIL SPECIFICATION

CONNECTORS, ELECTRICAL, PRINTED WIRING BOARD, GENERAL PURPOSE GENERAL SPECIFICATION FOR

This specification is approved for use by all Departments and Agencies of the Department of Defense.

1. SCOPE

1.1 Scope. This specification covers multicontact connectors for 1/16, 3/32, and 1/8 inch printed wiring boards, and for interconnections between printed wiring boards. The connectors are intended to provide a reliable connection between printed wiring and conventional wiring. The interconnector concept is intended to provide connection of printed wiring on one board to printed wiring on another board.

1.2 Classification. Connectors covered by this specification are classified by physical characteristics as indicated by type, style, class, size, and mounting provision (see 3.1).

1.2.1 Type. The type is identified as follows:

Types A and AD (card insertion connectors). Connector receptacles containing two contacts within each contact cavity, each of which engages a contact on an opposite side of a printed wiring board. In type A connectors, the two contacts in each cavity are electrically common. In AD connectors, the two contacts in each cavity are electrically isolated from each other.

Type CR (receptacle). Composite connector having a solder type or removable crimp type female contact inserted into and mechanically retained in a receptacle housing, or composite contacts mounted on individual intermating printed wiring boards. Type CR contacts mate with type CS contacts.

Type CS (adapter). Composite connector having individual contacts attached to a printed wiring or retained in an assembly attached to a printed wiring board. Type CS contacts mate with type CR contacts.

1.2.2 Style. The style of the connector is identified by a two-digit number which signifies the number of contact positions in the connector.

1.2.3 Class. The class is identified by a single letter symbol which denotes the kind of termination as specified in table I.

TABLE I. Class.

Symbol	Termination
a	Straight, eyelet, solder
b	Straight, plug-in, solder
c	Removable crimp or solder

Comments, suggestions, or questions on this document should be addressed to: Defense Supply Center Columbus, ATTN: DSCC-VAI, 3990 East Broad Street, Columbus, OH 43218-3990 or e mailed: RectangularConnector@dla.mil . Since contact information can change, you may want to verify the currency of this address information using the ASSIST online database http://assist.daps.dla.mil.

Downloaded from http://www.everyspec.com

1.2.4 Size. The size is identified by a single-digit symbol which indicates the thickness of the applicable mating wiring board as specified in table II.

TABLE II. Size.

Symbol	Thickness of printed wiring board
2	1/16-inch (.054 - .070)
3	3/32-inch (.084 - .103)
4	1/8-inch (.115 - .135)

1.2.5 Mounting provision. The mounting provision is identified by a single-letter symbol as specified in table III.

TABLE III. Mounting provisions.

Symbol	Mounting provision
A	Clearance holes of specified diameter at both ends of the connector.
B	Tapped insert of specified thread at both ends of the connector.
C	Floating feed-through bushing of specified dimensions at both ends of the connector.
D	Contacts composite (individual) attached to printed wiring board by mechanical staking prior to soldering.

1.3 Part or Identifying Number (PIN). The PIN consists of the letter ”M”, the basic number of the specification sheet, and an assigned dash number (see 3.1) as shown in the following:

M21097/1-001

Military designator — Specification sheet number — Dash number

2. APPLICABLE DOCUMENTS

2.1 General. The documents listed in this section are specified in sections 3, 4 or 5 of this specification. This section does not include documents cited in other sections of this specification or recommended for additional information or as examples. While every effort has been made to ensure the completeness of this list, document users are cautioned that they must meet all specified requirements documents cited in sections 3, 4 or 5 of this specification, whether or not they are listed.

2.2 Government documents.

2.2.1 Specifications, standards, and handbooks. The following specifications, standards, and handbooks form a part of this document to the extent specified herein. Unless otherwise specified, the issues of these documents are those cited in the solicitation or contract.

DEPARTMENT OF DEFENSE SPECIFICATIONS

MIL-DTL-14072 - Finishes for Ground Based Electronic Equipment.
MIL-DTL-16878 - Wire, Electrical, Insulated, General Requirements For.
MIL-DTL-22520 - Crimping Tools, Wire Termination, General Specification For.
MIL-M-24519 - Molding Plastics, Electrical, Thermoplastic.

Downloaded from http://www.everyspec.com

DEPARTMENT OF DEFENSE STANDARDS

MIL-STD-202 - Electronic and Electrical Component Parts.
MIL-STD-889 - Dissimilar Metals
MIL-STD-1285 - Marking of Electrical and Electronic Parts.

(See supplement 1 for list of specification sheets.)

(Copies of these documents are available online at http://assist.daps.dla.mil/quicksearch/ or http://www.assist.daps.mil or from the Standardization Document Order Desk, 700 Robbins Avenue, Building. 4D, Philadelphia, PA 19111-5094.)

2.3 Non-Government publications. The following documents form a part of this document to the extent specified herein. Unless otherwise specified, the issues of these documents are those cited in the solicitation or contract (see 6.2).

ASTM INTERNATIONAL

ASTM A342/A342M - Permeability of Feebly Magnetic Materials, Standard Test Methods For.
ASTM A484/A484M - Steel, Bars, Billets and Forgings, Stainless.
ASTM A581/A581M - Steel Wire and Wire Rods, Free Machining Stainless and Heat-Resisting.
ASTM A582/A582M - Free-Machining Stainless and Heat-Resisting Steel Bars.
ASTM B139/B139M - Rod, Phosphor Bronze, Bar, and Shapes.
ASTM B159/B159M - Phosphor Bronze Wire.
ASTM B194 - Copper-Beryllium Alloy Plate, Sheet, Strip, and Rolled Bar.
ASTM B196/B196M - Rod and Bar, Copper-Beryllium Alloy.
ASTM B197/B197M - Wire, Alloy Copper-Beryllium.
ASTM B488 - Gold for Engineering Uses, Electrodeposited Coatings Of.
ASTM B740 - Copper Nickel Tin Spinodal Alloy Strip.
ASTM D5927 - Thermoplastic Polyester (TPES) Injection and Extrusion Materials Based on ISO Test Methods, Standard Specification For.
ASTM D5948 - Compounds, Molding, Thermosetting.

(Copies of these documents are available online at http://astm.org or from ASTM International, P.O. Box C700, 100 Barr Harbor Dr. West Conshohocken, PA 19428.)

ELECTRONIC INDUSTRIES ASSOCIATION (EIA)

EIA-364 - Electrical Connector/Socket Test Procedures Including Environmental Classifications.
EIA-364-06 - Contact Resistance Test Procedure for Electrical Connectors.
EIA-364-11 - Resistance to Solvents Test Procedure for Electrical Connectors and Sockets.
EIA-364-20 - Withstanding Voltage Test Procedure for Electrical Connectors, Sockets and Coaxial Contacts.
EIA-364-21 - Insulation Resistance Test Procedure for Electrical Connectors, Sockets, and Coaxial Contacts.
EIA-364-23 - Low Level Contact Resistance Test Procedure for Electrical Connectors and Sockets.
EIA-364-26 - Salt Spray Test Procedure for Electrical Connectors, Contacts and Sockets.
EIA-364-27 - Mechanical Shock (Specified Pulse) Test Procedure for Electrical Connectors.
EIA-364-28 - Vibration Test Procedure for Electrical Connectors and Sockets.
EIA-364-31 - Humidity Test Procedure for Electrical Connectors and Sockets.
EIA-364-32 - Thermal Shock (Temperature Cycling) Test Procedure for Electrical Connectors and Sockets.
EIA-557 - Statistical Process Control Systems.

(Copies of these documents are available online at http://www.eia.org or from Electronic Industry Alliance, Technology Strategy & Standards Department, 2500 Wilson Boulevard, Arlington, VA 22201.)

Downloaded from http://www.everyspec.com

INTERNATIONAL ORGANIZATION FOR STANDARDS (ISO)

ISO 10012-1 – Equipment, Quality Assurance Requirements for Measuring, Part 1: Meteorological Confirmation System for Measuring Equipment.

(Copies of these documents are available online at http://www.iso.ch or International Organization for Standardization American National Standards Institute, 11 West 42nd Street, 13th Floor, New York, NY 10036.)

NATIONAL CONFERENCE of STANDARDS LABOR (NCSL)

NCSL Z540-1 - Laboratories, Calibration, and Measuring and Test Equipment.

(Copies of these documents are available online at http://www.ncsli.org or from NCSL International 2995 Wilderness Place, Suite 107 Boulder, Colorado 80301-5404)

SOCIETY OF AUTOMOTIVE ENGINEERS, INC (SAE)

SAE-AMS-QQ-P-416	-	Plating, Cadmium (Electrodeposited)
SAE-AMS-P-81728	-	Plating, Tin-Lead (Electrodeposited).
SAE-AMS 2418	-	Copper, Plating.
SAE-AMS-2700	-	Passivation Of Corrosion Resistant Steel.
SAE-AMS2403	-	Nickel Plating (Electrodeposited).

(Copies of these documents are available online at http://www.sae.org or from the Society of Automotive Engineers, 400 Commonwealth Drive, Warrandale, PA 15096-0001.)

THE INSTITUTE FOR INTERCONNECTING AND PACKAGING ELECTRONIC CIRCUITS (IPC)

IPC-D275 - Design Standard for Rigid Printed Boards and Rigid Printed Board Assemblies

(Copies of this document are available online at http://www.ipc.org or from IPC, 2215 Sanders Road, Northbrook, IL 60062-6135.)

2.4 Order of precedence. In the event of a conflict between the text of this document and the references cited herein (except for related specifications sheets), the text of this document takes precedence. Nothing in this document, however, supersedes applicable laws and regulations unless a specific exemption has been obtained.

3. REQUIREMENTS

3.1 Specification sheets. The individual item requirements shall be as specified herein and in accordance with the applicable specification sheet. In the event of any conflict between the requirements of this specification and the specification sheet, the latter shall govern.

3.2 Qualification. Connectors and accessories furnished under this specification shall be products that are authorized by the qualifying activity for listing on the applicable qualified products list before contract award (see 4.6 and 6.3).

3.2.1 Quality.

3.2.1.1 Statistical process control (SPC). The contractor shall implement and use SPC techniques in the manufacturing process for parts covered by this specification. The SPC program shall be developed and maintained in accordance with EIA-557. Where SPC cannot be utilized because of non-continuous production requirements, a lot sampling plan for inspection in accordance with group A lot and sample size with c = 0 can be utilized. The SPC and c = 0 programs shall be documented and maintained as part of the overall reliability assurance program as specified in EIA-557. Evidence of such compliance shall be verified by the qualifying activity of this specification as a prerequisite for qualification.

Downloaded from http://www.everyspec.com

3.3 Materials. Materials shall be as identified herein. However, when a definite material is not specified, a material shall be used which will enable the connectors and accessories to meet the performance requirement. Acceptance or approval of any constituent material shall not be construed as a guaranty of the acceptance of the finished product.

3.3.1 Reference materials, platings and processes. The identified reference materials, platings, and processes have been established to provide assurances that connectors manufactured to this specification will properly interface to similar industry standard or government specified connector systems without problems of electrochemical contamination of critical electrical or mechanical interfaces or generation of incompatible mechanical interface surface wear products. The manufacturers of connectors supplied to this specification are allowed to use alternate recognized industry standard materials, platings, and processes from those specified in 3.3 of this specification. Alternate materials, platings and processes used must be coordinated with the qualifying activity as part of the qualification process. Use of alternates to those referenced guidance items by the supplier shall not result in inferior short or long term performance or reliability of supplied connectors as compared with connectors manufactured using the referenced materials, platings, or processes. Short or long term failures or reliability problems due to use of these alternates shall be the responsibility of the supplier.

3.3.2 Recycled, recovered, or environmentally preferable materials. Recycled, recovered, or environmentally preferable materials should be used to the maximum extent possible, provided that the material meets or exceeds the operational and maintenance requirements, and promotes economically advantageous life cycle costs.

3.3.3 Nonmagnetic materials. All parts shall be made from materials which are classed as nonmagnetic (permeability ≤ 2μ using indicator in accordance with ASTM A342/A342M) (see 3.3).

3.3.4 Body materials. Unless otherwise specified (see 3.1), the body material shall conform to SDG-F or GDI-30F in accordance with ASTM D5948 (see 3.3) or type TPES013G30 in accordance with ASTM D5927 or type GPT-30F in accordance with MIL-M-24519.

3.3.5 Dissimilar metals. Where dissimilar metals are used in intimate contact with each other, protection against electrolysis and corrosion shall be provided. Dissimilar metals shall be defined and classified in accordance with MIL-STD-889. Dissimilar metals such as brass, copper, or steel (except corrosion resisting steel, passivated in accordance with 3.3.6.1) shall not be used in intimate contact with aluminum or aluminum alloy.

3.3.6 Finish. All exposed metal parts, other than electrical contacts and stainless steel parts, shall be cadmium plated in accordance with SAE-AMS-QQ-P-416, type II, class 1 or 2, except that a preliminary plating of other metal is permissible. Stainless steel parts shall be passivated in accordance with SAE-AMS-2700, method 1, type 2.

3.3.6.1 Corrosion-resistant steel. Where applicable, corrosion-resistant steel shall be 300 series, low magnetic permeability in accordance with ASTM A581/A581M, ASTM A582/A582M, or ASTM A484/A484M and passivated in accordance with SAE-AMS-2700, method 1, type 2, or to finish E300 as specified in MIL-DTL-14072 (see 3.1).

3.3.7 Contacts. Unless otherwise specified (see 3.1), contact material shall be phosphor bronze in accordance with ASTM B139/B139M or beryllium copper in accordance with ASTM B194, ASTM B196/B196M or ASTM B197/B197M, or copper nickel tin alloy C72900 in accordance with ASTM B740.

3.3.7.1 Contact finish. All contact finishes shall have an underplate of copper in accordance with SAE AMS2418 (100 microinches) or nickel in accordance with SAE-AMS2403 (30 to 150 microinches). A gold plating in accordance with ASTM B488, type I is permissible under type II gold. Silver underplate shall not be used. Either an overall finish (3.3.7.1.1) or a localized finish (3.3.7.1.2) is permitted.

NOTE: When contacts have been provided in strip form, the absence of plating in the area where the contact was removed from the strip is acceptable provided it is in a nonfunctional area and any corrosion formed as a result of salt spray testing does not creep into contact mating area.

Downloaded from http://www.everyspec.com

3.3.7.1.1 Overall finish. All parts of the contact shall be gold plated, in accordance with ASTM B488, type II, class 1.27, code C.

3.3.7.1.2 Localized finish.

3.3.7.1.2.1 Contact mating area. The contact mating area shall be gold in accordance with ASTM B488, type II, class 1.27, code C, over nickel in accordance with SAE-AMS2403 (30 to 150 microinches). The contact mating area is defined on figure 1, configurations A through E.

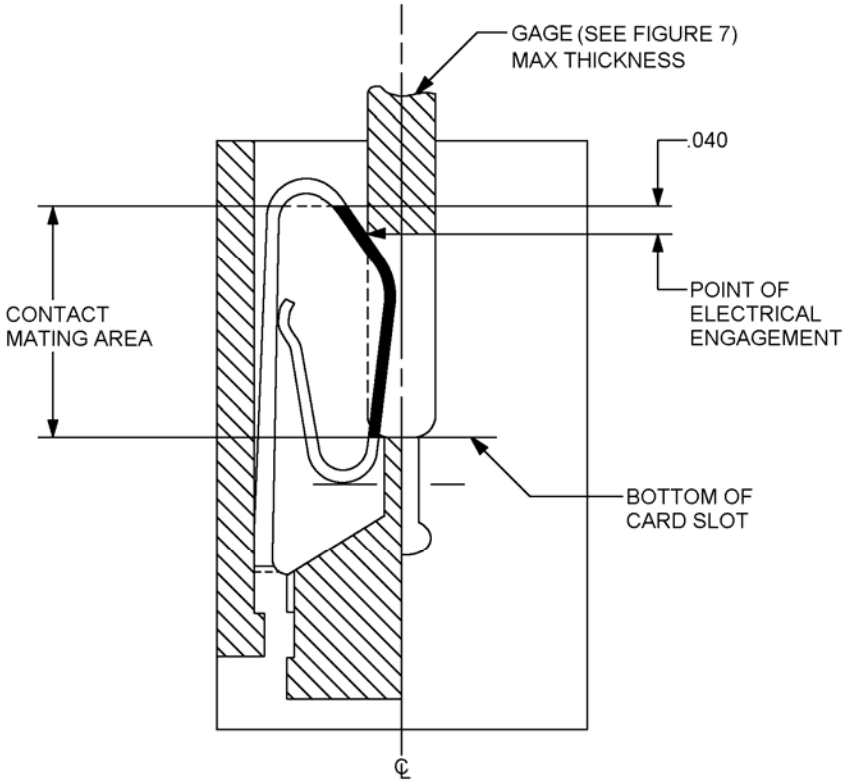

CONFIGURATION A

Inches	mm
.020	0.51
.040	1.02

FIGURE 1. Contact mating area.

Downloaded from http://www.everyspec.com

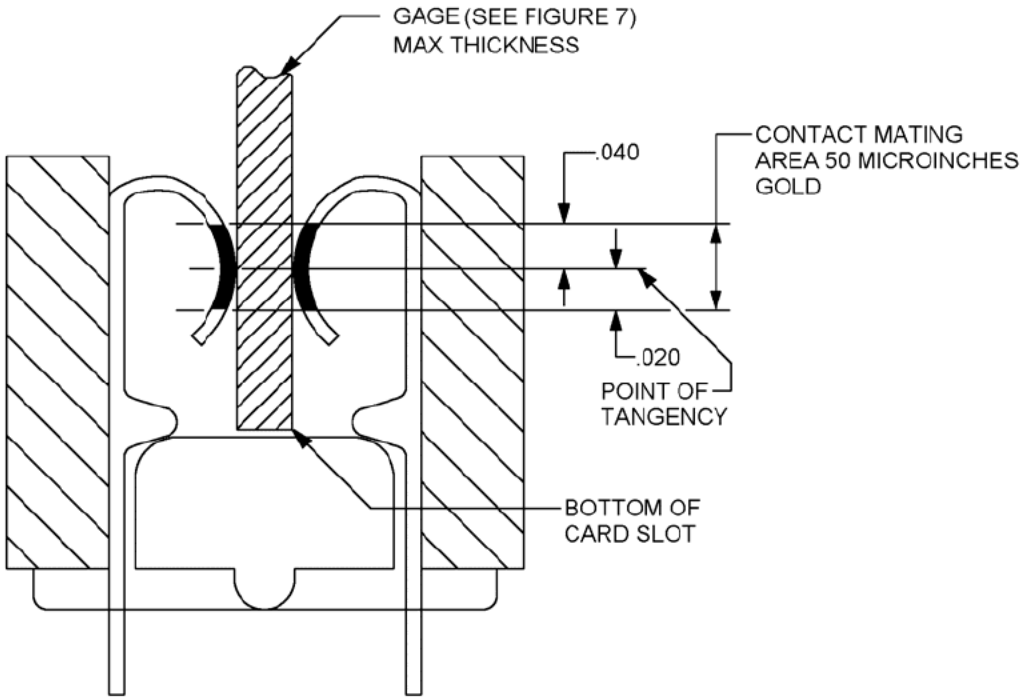

CONFIGURATION B

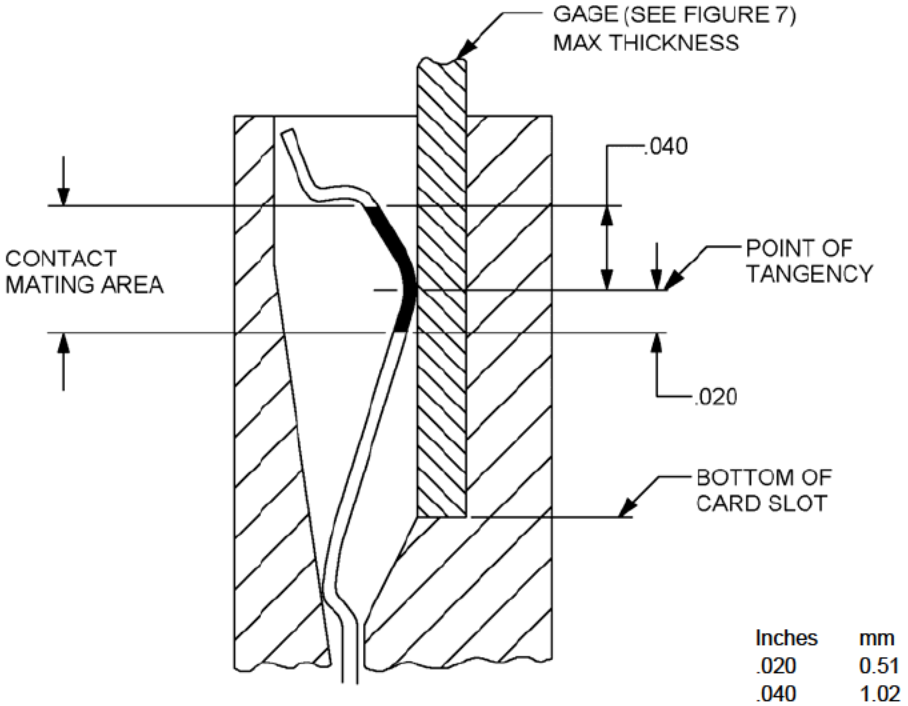

Inches	mm
.020	0.51
.040	1.02

CONFIGURATION C

FIGURE 1. Contact mating area - Continued.

Downloaded from http://www.everyspec.com

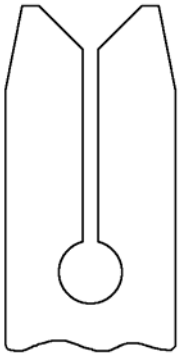

HERMAPHRODITIC CONTACT

CONFIGURATION D

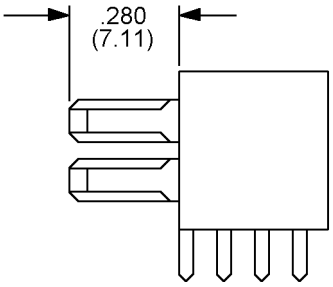

CONFIGURATION E

FIGURE 1. Contact mating area - Continued.

3.3.7.1.2.2 Terminations.

a. Solder termination areas shall be tin-lead plated in accordance with SAE-AMS-P-81728, .0001 inch minimum. The tin content for class b shall be 50 to 70 percent. For classes A or C, and type CS, the tin content shall be 50 to 95 percent.

b. Crimp termination (class C) areas shall be gold plated in accordance with ASTM B488 type II, class 1.27, code C, over a nickel underplate in accordance with SAE-AMS2403 (30 to 150 microinches).

Downloaded from http://www.everyspec.com

3.3.7.1.2.3 Nonfunctional areas. Any portion of the contact other than the contact mating area or termination area shall, as a minimum, have a nickel plating in accordance with SAE-AMS2403 (30 to 150 microinches).

3.3.8 Contact springs. Unless otherwise specified (see 3.1), contact springs shall be made from a suitable copper alloy material. The contact springs shall be gold-plated in accordance with ASTM B488, type II, class 1.27, code C, except that silver underplate shall not be used.

3.3.9 Pure tin. The use of pure tin, as an underplate or final finish, is prohibited both internally and externally. Tin content used in connector materials and solder shall not exceed 97 percent by mass. Tin shall be alloyed with a minimum of 3 percent lead, by mass (see 6.4).

3.4 Design and construction. Connectors shall be of the design, construction, and physical dimensions specified (see 3.1). Barriers may be used as necessary to meet leakage requirements. Solderless wrap termination areas shall be tin lead plated in accordance with SAE-AMS-P-81728, .0001 to .0003 inch thick. The tin lead composition shall be 50 to 95 percent tin.

3.4.1 Body design. Connector bodies shall be designed and constructed with proper sections and radii to preclude cracking, chipping, or breaking during assembly or in normal service. Depressions used to achieve longer creepage paths shall not be used so as to cause structural weakness.

3.4.2 Contacts. Contacts shall be as specified (see 3.1). The contacts shall be designed in such a way that they will not be damaged by mating and unmating in the normal manner, nor shall they damage the printed wiring board to an extent beyond normal wear. Pin contacts shall also be capable of being crimped with a crimping tool in accordance with MIL-DTL-22520.

3.4.2.1 Contact spacing. The center to center distance between contacts shall be as specified (see 3.1).

3.4.2.2 Contact arrangements. Contacts shall be arrange in accordance with individual type requirements as specified (3.1).

3.4.2.3 Contact finish. Contact finish shall be smooth, free of shear lines, tear out or scratches, and shall show no signs of porosity or surface cracks when examined under 10-power magnification.

3.4.2.4 Contact and terminal identification. All contact and terminal designations shall be permanent and legible and shall be located on the front and rear faces of the connector body as indicated (see 3.1). Contact positions on the front face shall be identified by raised numerals. Rear face termination positions shall be identified by either raised numerals or flush numerals in contrasting color.

3.4.3 Polarization. Polarization of the connector assembly, when required, shall be accomplished by the installation of a polarizing key in any one or more contact positions, or between contact positions. Contacts shall not be removed for polarization purposes. Polarization shall be accomplished before engagement of the contacts and shall prevent the mating of the connector assembly in any manner other than the method intended. Polarizing keys shall have the dimensions and characteristics as specified (see 3.1).

3.4.4 Mating. Printed wiring board and receptacles shall be capable of mating and unmating by hand without the use of special tools within the temperature range for these connectors (see 3.5.2).

3.4.5 Insertion and removal tools. Insertion and removal tools shall be as specified (see 3.1).

3.5 Electrical characteristics.

3.5.1 Contact current rating. Unless otherwise specified (see 3.1), the maximum current rating for all type contacts shall be 5.0 amperes

3.5.2 Operating temperature. Connectors shall be capable of continuous operation within a temperature range of -65°C to+125°C.

3.6 Permeability. When connectors are tested as specified in 4.6.2, the permeability shall be less than 2.0 μ.

Downloaded from http://www.everyspec.com

3.7 Insulation resistance. When connectors are tested in accordance with 4.6.3, the initial insulation resistance shall be not less than the applicable value specified below:

a. Connectors (individual contact) mounted to PC boards – 500 megohms.

b. Connectors not mounted PC boards – 5,000 megohms.

3.8 Dielectric withstanding voltage. When connectors are tested as specified in 4.6.4, there shall be no evidence of breakdown of insulation or flashover when the voltages specified in table IV are applied between adjacent contacts and between any external mounting hardware and the closest contacts to the hardware.

TABLE IV. Voltages for contact spacing.

Altitude	Test voltages for contact spacing (in inches)					
	0.050	0.075	0.100	0.125	0.156	0.200
Sea level	375	375	650	1500	1800	1800
50,000 feet	275	275	275	500	675	675
70,000 feet	275	275	275	325	450	450

3.9 Contact resistance. When connectors are tested as specified in 4.6.5, unless otherwise specified (see 3.1), the initial contact resistance shall not exceed 30 millivolts. In addition, the difference between the initial measurement and any succeeding measurement made upon an identical individual contact shall not increase by more than 50 percent of the initial measurement.

3.10 Engagement and separation forces (board side).

3.10.1 Individual contact engagement and separation forces.

3.10.1.1 Test I (applicable on to types A and AD). When connectors are tested as specified in 4.6.6.1.1, the individual contact engagement force shall not exceed 16 ounces. Unless otherwise specified (see 3.1), the separation force shall be not less than 1 ounce.

3.10.1.2 Test II (type CR, as applicable). When connectors are tested as specified in 4.6.6.1.2, the individual contact engagement force shall not exceed 16 ounces and the separation force shall be not less than 2 ounces.

3.10.2 Total engagement force (applicable on to types A and AD). When connectors are tested as specified in 4.6.6.2, unless otherwise specified (see 3.1), the total engagement force shall be not greater than values specified in table V.

TABLE V. Total connector engagement force.

Number of contact positions	Maximum board insertion force (gage)
6	8 pounds
10	12
15	19
18	22
22	27
25	28
28	35
30	38
36	45
43	54

Downloaded from http://www.everyspec.com

3.11 Temperature cycling. When connectors are tested as specified in 4.6.7, there shall be no evidence of physical damage. Upon completion of test, insulation resistance and dielectric withstanding voltage shall meet the requirements of 3.7 and 3.8.

3.12 Vibration. When complete connector assembly, printed wiring board, and receptacle are tested as specified in 4.6.8, there shall be no cracking, breaking, or loosening of parts. There shall be no loss of electrical continuity of any contact circuits for a period greater than one microsecond.

3.13 Shock. When connectors are tested as specified in 4.6.9, there shall be no evidence of mechanical failure of metallic or dielectric materials. There shall be no loss of electrical continuity of any contact circuits for a period greater than one microsecond. Upon completion of testing, the engagement and separation forces shall meet the requirements of 3.10.1 and 3.10.2.

3.14 Bond strength, body assembly. Where applicable, when the insulating body of the connector is constructed of two or more parts, the connector shall be tested as specified in 4.6.10. The connector shall show no evidence of cracking, breaking or loosening of parts, or delamination of the assembly when a force of 1 pound per position is applied.

3.15 Contact retention.

3.15.1 Crimp and solder type CR contacts. When connectors are tested as specified in 4.6.11, the contacts shall withstand an axial load of 10 pounds.

3.16 Board insertion force (overstress). When connectors are tested as specified in 4.6.12, there shall be no evidence of physical damage. The engagement and separation forces shall meet the requirements of 3.10.1 or 3.10.2, as applicable.

3.17 Humidity. When connectors are tested as specified in 4.6.13, the insulation resistance of the connector shall be not less than 1,000 megohms.

3.18 Durability (board side) (applicable only to types A, AD, and CR). When connectors are tested as specified in 4.6.14.1 or 4.6.14.2, the body and contacts shall show no evidence of physical damage. Unless otherwise specified (see3.1), the contact resistance shall meet the requirements of 3.9, and the individual contact separation force shall be not less than 1 ounce.

3.19 Salt spray (corrosion). When connectors are tested as specified in 4.6.15, any corrosion resulting from the salt spray test shall not interfere with the mating or unmating of the printed wiring board and receptacle and shall not impair the electrical function of the connector.

3.20 Low-signal level contact resistance. When connectors are tested as specified in 4.6.16, the resistance of any contact shall not exceed 7 milliohms, unless other wise specified (see 3.1).

3.21 Crimp resistance. When contacts are tested as specified in 4.6.17, crimp resistance shall not exceed the potential drop requirements of table VI.

3.22 Current cycling (crimp). When contacts are tested as specified in 4.6.18, they shall withstand 50 cycles of exposure to 125 percent of the test current without exceeding the “after test” voltage drop specified in table VI.

TABLE VI. Crimp contact resistance.

Wire size	Test current	Initial maximum millivolt drop	After test maximum millivolt drop
28	1.0	3.0	5.0
26	1.0	2.5	4.0
24	3.0	6.0	10.0
22	5.0	6.0	10.0
20	7.5	5.0	9.0
18	10.0	5.0	8.0

Downloaded from http://www.everyspec.com

3.23 Crimp tensile strength (type CR). When tested as specified in 4.6.19, the individual contact to wire crimp of pin or blade contacts conforming to their applicable specification sheet shall have a minimum tensile strength as specified in table VII.

TABLE VII. Tensile strength.

Wire size	Minimum tensile strength (lbs)
28	3
26	5
24	8
22	12
20	20
18	30

3.24 Marking. Unless otherwise specified (see 3.1), each connector or adapter shall be marked in accordance with MIL-STD-1285.

3.25 Solderability. Solder terminations shall withstand the test conditions specified in 4.6.20.

3.26 Resistance to soldering heat. Connectors shall withstand the test specified in 4.6.21.

3.27 Resistance to solvents. When tested as specified in 4.6.22, the connectors shall be visually inspected and shall show no evidence of cracking, crazing, discoloration, distortion or bleeding of any foreign matter from the material. Pitting shall not be allowed. The marking and color coding shall be legible.

3.28 Workmanship. Connectors shall be processed in such a manner as to be uniform in quality and shall be free from defects that will affect life, serviceability, or appearance. There shall be no evidence of loose contacts, poor molding or fabricating, damaged or improperly assembled contacts, peeling or chipping of the plating and finish, parting lines of mold which would indicate improper molding techniques, improper tinning of terminals or eyelets and nicks and burrs of metal parts surfaces.

3.29 Interchangeability. Printed wiring connectors of a given type, style, class, and size manufactured by one source to the requirements of the specification shall be capable of mating with their associated printed wiring boards of equivalent size manufactured to the requirements of the specification by other sources.

4. VERIFICATION

4.1 Classification of inspection. The inspections specified herein are classified as follows:

a. Qualification inspection (see 4.4).
b. Conformance inspection (see 4.5).

4.2 Inspection conditions. Unless otherwise specified herein, all inspections shall be performed in accordance with the test conditions specified in the "GENERAL REQUIREMENTS" of MIL-STD-202 and EIA-364.

4.2.1 Test equipment and inspection facilities. Test and measuring equipment and inspection facilities of sufficient accuracy, quality and quantity to permit performance of the required inspection shall be established and maintained by the contractor. The establishment and maintenance of a calibration system to control the accuracy of the measuring and test equipment (i.e. NCSL Z540-1, ISO 10012-1 part 1 or comparable standards) shall be required.

4.2.2 Assembly plants. Assembly plants shall be listed on or approved for listing on the applicable Qualified Products List (QPL). The qualified connector manufacturer shall certify that the assembly plant is approved for the distribution of the manufacturer's parts. The assembly plant shall use only piece parts supplied by the qualified connector manufacturer. No testing other than visual inspection is required of certified piece parts obtained from the qualified connector manufacturer, except when there is cause for rejection. All assemblies produced at the assembly plant shall be subjected to inspection of product to assure that the assembly process conforms with that established at the qualified manufacturing plant. Quality control requirements, including Government inspection surveillance, shall be the same as required for the qualified connector manufacturer.

Downloaded from http://www.everyspec.com

4.3 Preparation of samples.

4.3.1 Connectors. Unless otherwise specified (see 3.1), connectors having solder type contacts shall be wired using no. 20 AWG wire in accordance with MIL-DTL-16878, type E.

4.3.2 Crimped contacts. Contacts shall be crimped to the appropriate wire size. The wire size shall be in accordance with MIL-DTL-16878, type E.

4.4 Qualification inspection. Qualification inspection shall be performed at a laboratory acceptable to the Government (see 6.3) on sample units produced with equipment and procedures normally used in production. Use of alternate materials, platings and processes (see 3.3) shall be identified for inclusion in the product test documentation.

4.4.1 Sample size. Ten connectors assemblies (with a full complement of contacts) of each style shall be subjected to qualification inspection. The samples shall be of the size, mounting provision, and class of the connectors as specified (see 3.1).

4.4.1.1 Individual contact measurements. Unless otherwise specified herein or in the individual specification sheet, individual contact measurements shall be made on 15 contacts in each connector or 50 percent of the contacts in each connector where the number of measurements are limited by style to less than 15 contacts.

4.4.1.2 Crimp type contacts. Fifty crimp type contacts for which approval is desired shall be crimped to the appropriate wire size. Where a contact covers a range of wire sizes, one-half of the contacts of each group shall be crimped to the smallest wire size in the range.

4.4.2 Inspection routine. The sample shall be subjected to the inspections specified in tables VIII and IX, as applicable, in the order shown. The sample shall be divided as specified in tables VIII and IX, and the sample units subjected to the inspection for their particular group.

4.4.3 Failures. One or more failures shall be cause for refusal to grant qualification approval.

4.4.4 Verification of qualification. To retain qualification, the contractor shall verify in coordination with qualifying activity the capability of manufacturing products which meet the requirements of this specification. The qualifying activity shall be notified whenever inspection data indicates failure of the qualified product to meet the performance requirements of this specification.

Downloaded from http://www.everyspec.com

TABLE VIII. Qualification inspection.

Inspection	Requirement paragraph	Test method paragraph
Group 1 (2 samples)		
Visual and mechanical	3.1, 3.3 to 3.4.4 incl. 3.24 to 3.28	4.6.1
Permeability	3.6	4.6.2
Insulation resistance	3.7	4.6.3
Dielectric withstanding voltage	3.8	4.6.4
Contact resistance	3.9	4.6.5
Engagement and separation forces (board side)	3.10	4.6.6
Individual contact engagement and separation forces	3.10.1	4.6.6.1
Test I 1/	3.10.1.1	4.6.6.1.1
Test II 2/	3.10.1.2	4.6.6.1.2
Total engagement force 1/	3.10.2	4.6.6.2
Contact resistance	3.9	4.6.5
Temperature cycling	3.11	4.6.7
Vibration	3.12	4.6.8
Shock	3.13	4.6.9
Bond strength, body assembly	3.14	4.6.10
Contact retention 3/	3.15	4.6.11
Group II (2 samples)		
Visual and mechanical inspection	3.1, 3.3 to 3.4.4 incl. 3.24 to 3.28	4.6.1
Permeability	3.6	4.6.2
Insulation resistance	3.7	4.6.3
Dielectric withstanding voltage	3.8	4.6.4
Contact resistance	3.9	4.6.5
Board insertion force (overstress)	3.16	4.6.12
Humidity	3.17	4.6.13
Durability (board side) 4/	3.18	4.6.14
Salt spray (corrosion)	3.19	4.6.15
Low-signal level contact resistance	3.20	4.6.16
Contact resistance	3.9	4.6.5
Bond strength, body assembly	3.14	4.6.10
Group III (2 samples)		
Visual and mechanical inspection	3.1, 3.3 to 3.4.4 incl. 3.24 to 3.28	4.6.1
Permeability	3.6	4.6.2
Contact resistance	3.9	4.6.5
Durability (board side) 4/	3.18	4.6.14
Bond strength, body assembly	3.14	4.6.10
Group IV		
Visual and mechanical inspection	3.1, 3.3 to 3.4.4 incl. 3.24 to 3.28	4.6.1
Permeability	3.6	4.6.2
Low-signal level contact resistance 5/	3.20	4.6.16
Temperature cycling	3.11	4.6.7
Humidity 5/	3.17	4.6.13
Low-signal level contact resistance	3.20	4.6.16
Group V		
Solderability	3.25	4.6.20
Resistance to soldering heat	3.26	4.6.21
Resistance to solvents	3.27	4.6.22

See footnotes at end of table.

Downloaded from http://www.everyspec.com

TABLE VIII. Qualification inspection – Continued.

1/ Applicable to only types A and AD.
2/ Type CR as applicable.
3/ Applicable only to crimp and solder type CR contacts with wire sizes 22 and larger.
4/ Applicable only to Types A, AD, and CR.
5/ Connectors tested in this group shall not be subjected to the electrical response measurements specified in the applicable requirements paragraph of these environments. The environments are being used for conditioning of low level test samples.

TABLE IX. Qualification inspection for crimp contacts.

Inspection	Requirement paragraph	Test method paragraph
Group 1 (50 samples)		
Visual and mechanical inspection 1/	3.1, 3.3 to 3.4.4 incl. 3.24 to 3.28	4.6.1
Crimp resistance	3.21	4.6.19
Salt spray	3.19	4.6.15
Current cycling (crimp)	3.22	4.6.18
Crimp resistance	3.21	4.6.17
Crimp tensile strength 2/	3.23	4.6.19

1/ Dimensional measurements are required on eight contacts only.
2/ Type CR, as applicable.

4.5 Conformance inspection.

4.5.1 Inspection of product for delivery. Inspection of product for delivery shall consist of group A inspection.

4.5.1.1 Inspection lot. An inspection lot shall consist of all the connectors and related contacts of the same style and PIN, produced under essentially the same conditions, and offered for inspection at one time.

4.5.1.2 Group A inspection. Group A inspection shall consist of the inspections specified in table X, in the order shown.

4.5.1.2.1 Sampling plan (group A). Table X tests shall be performed on each production lot. Samples shall be selected as specified in table XI. If one or more defects are found, the lot shall be screened for that particular defect and defects removed. A new sample of parts shall be selected as specified in table XI and all group A tests again performed. If one or more defects are found in the second sample, the lot shall be rejected and shall not be supplied to this specification.

TABLE X. Group A inspection.

Inspection	Requirement paragraph	Test method paragraph
Visual and mechanical inspection 1/	3.1, 3.3 to 3.4.4 incl. 3.24 to 3.28	4.6.1
Engagement and separation forces (board side)	3.10	4.6.6
Individual contact engagement and separation forces	3.10.1	4.6.6.1
Test I 1/	3.10.1.1	4.6.6.1.1
Total engagement force 1/	3.10.2	4.6.6.2
Dielectric withstanding voltage	3.8	4.6.4
Bond strength, body assembly	3.14	4.6.10

1/ Applicable only to types A and AD.

Downloaded from http://www.everyspec.com

TABLE XI. Lot and sample size.

Lot size	Sample size
2 to 13	100%
14 to 150	13
151 to 280	20
281 to 500	29
501 to 1,200	34
1,201 to 3,200	42
3,200 to 10,000	50
10,001 to 35,000	60
35,001 to 150,000	74
150,001 to 500,000	90
500,001 and over	102

4.5.1.2.2 Rejected lots. If an inspection lot is rejected, the manufacturer may rework it to correct the defects, or screen out the defective units, and resubmit for reinspection. Resubmitted lots shall be inspected using the sample size of the next higher lot size specified in table V and shall not thereafter be tendered for acceptance unless the former rejection or requirement of correction is disclosed. Such lots shall be separate from new lots, and shall be clearly identified as reinspected lots.

4.5.2 Periodic inspection. Periodic inspection shall consist of group B inspections. Except where the results of these inspections show noncompliance with the applicable requirements (see 4.5.2.1.4). The delivery of products which have passed group A shall not be delayed pending the results of these periodic inspections.

4.5.2.1 Group B inspection. Group B inspection shall consist of the inspections specified in tables XII and XIII in the order shown. Group B inspection shall be made on sample units which have passed the group A inspections

4.5.2.1.1 Sampling plan (group B). Six connectors assemblies with the largest number of contacts (with a full complement of contacts) shall be selected from each specification sheet for which qualification is desired, 36 months after the date of notification of qualification and after each subsequent 36 month period.

TABLE XII. Group B inspection.

Inspection	Requirement paragraph	Test method paragraph
Group I (2 samples)		
Visual and mechanical inspection	3.1, 3.3 to 3.4.4 incl. 3.24 to 3.28	4.6.1
Insulation resistance	3.7	4.6.3
Dielectric withstanding voltage	3.8	4.6.3
Contact resistance	3.9	4.6.5
Engagement and separation forces (board side)	3.10	4.6.6
Individual contact engagement and separation forces	3.10.1	4.6.6.1
Test I 1/	3.10.1.1	4.6.6.1.1
Test II 2/	3.10.1.2	4.6.6.1.2
Total engagement force 1/	3.10.2	4.6.6.2
Contact resistance	3.9	4.6.5
Temperature cycling	3.11	4.6.7
Shock	3.13	4.6.9
Bond strength, body assembly	3.14	4.6.10
Contact retention 3/	3.15	4.6.11

See footnotes at the end of the table.

Downloaded from http://www.everyspec.com

TABLE XII. Group B inspection - Continued.

Inspection	Requirement paragraph	Method paragraph
Group I - continued		
Resistance to soldering heat	3.26	4.6.21
Resistance to solvents	3.27	4.6.22
Group II (2 samples)		
Visual and mechanical inspection	3.1, 3.3 to 3.4.4 incl. 3.24 to 3.28	4.6.1
Insulation resistance	3.7	4.6.3
Dielectric withstanding voltage	3.8	4.6.4
Contact resistance	3.9	4.6.5
Board insertion force (overstress)	3.16	4.6.12
Durability (boardside) 4/	3.18	4.6.14
Bond strength, body assembly	3.14	4.6.10
Group III (2 samples)		
Visual and mechanical inspection	3.1, 3.3 to 3.4.4 incl. 3.24 to 3.28	4.6.1
Contact resistance	3.9	4.6.5
Durability (boardside) 4/	3.18	4.6.14
Bond strength (board assembly)	3.14	4.6.10

1/ Applicable only to types A and AD.
2/ Type CR, as applicable
3/ Applicable only to crimp and solder type CR contacts with wire sizes 22 and larger.
4/ Applicable only to types A, AD and CR.

TABLE XIII. Group B inspection for crimp contacts.

Inspection	Requirement paragraph	Method paragraph	Number of sample units to be inspected
Group I			
Visual and mechanical inspection 1/	3.1, 3.3 to 3.4.4 incl. 3.24 to 3.28	4.6.1	
Contact resistance	3.9	4.6.5	50
Salt spray (corrosion)	3.19	4.6.15	
Crimp resistance	3.21	4.6.17	
Crimp tensile strength 2/	3.23	4.6.19	

1/ Dimensional measurements are required on 8 contacts only.
2/ Type CR.

4.5.2.1.1.1 Contacts. Fifty crimp contacts shall be crimped to the appropriate wire size and submitted to the tests specified in table XIII. Where a contact covers a range of wire sizes, one-half of the contacts of each group shall be crimped to the largest size in the range and one-half of each group shall be crimped to the smallest wire size in the range.

4.5.2.1.2 Failures. If one or more sample units fail to pass group B inspection, the sample shall be considered to have failed.

4.5.2.1.3 Disposition of sample units. Sample units which have been subjected to group B inspection shall not be delivered on the contract or order.

Downloaded from http://www.everyspec.com

4.5.2.1.4 Noncompliance. If a sample fails to pass group B inspection, the manufacturer shall notify the qualifying activity and the cognizant inspection activity of such failure and take corrective action on the materials or processes, or both, as warranted, and on all units of product which can be corrected and which were manufactured under essentially the same conditions, with essentially the same materials and processes, and which are considered subject to the same failure. Acceptance and shipment of the product shall be discontinued until corrective action, acceptable to the qualifying activity has been taken. After the corrective action has been taken, group B inspection shall be repeated on additional sample units (all inspections, or the inspection which the original sample failed, at the option of the qualifying activity). Group A inspection may be reinstituted; however, final acceptance and shipment shall be withheld until the group B inspection has shown that the corrective action was successful. In the event of failure after reinspection, information concerning the failure shall be made available to the cognizant qualifying activity.

4.6 Methods of inspection.

4.6.1 Visual and mechanical examination. Connector and contacts shall be inspected to verify that the design requirements, construction, materials, dimensions, marking, and workmanship are in accordance with applicable requirements (see 3.1, 3.3 through 3.4.4, 3.24 and 3.28). Standard inspection measuring tools shall be used.

4.6.1.1 Test methods. The following identified tests and test methods assure connector integrity within typical operating conditions and applications. Alternate commercial industry standard test methods are allowed; however when an alternate method is used, the qualifying activity must be notified prior to performance of the test. The test methods described herein are proven methods and shall be the referee method in cases of dispute.

4.6.1.2 Interchangeability. Physical configuration and dimensional measurements shall meet the requirements of 3.5 and 4.5.1 and as specified on the individual specification sheet (see 3.1).

4.6.2 Permeability (see 3.6). The permeability of the assembled connector shall be measured with an indicator in accordance with ASTM A342/A342M.

4.6.3 Insulation resistance (see 3.14). Unmated connector assemblies shall be tested in accordance with test procedure EIA-364-21. The following details and exceptions shall apply:

a. Points of measurement: Between individual contact pairs, and between all contacts and the body.

b. Electrification time: 1 minute.

4.6.4 Dielectric withstanding voltage (see 3.8). Unmated connectors shall be tested in accordance with test procedure EIA-364-20. The following details and exceptions shall apply:

a. Special conditions: All contacts shall be subjected to the high potential test. They may be wired with alternate series in contacts in a manner to test the high potential characteristics between adjacent not opposing pairs of contacts. There shall be no insulated tubing used over the terminals during this test.

b. Magnitude of test voltage: Applicable value specified at sea level and per contact in table IV, applicable value specified at altitude and per contact spacing in table IV for types CR and CS only.

c. Nature of potential: ac.

d. Duration of application of test voltage: 60 ±10 seconds after voltage requirements is attained. Voltage applied shall be at a rate not exceeding 500 volts per second until test voltage is attained.

Downloaded from http://www.everyspec.com

4.6.5 Contact resistance (see 3.9). Connectors shall be tested in accordance with test procedure EIA-364-06. The following details and exceptions shall apply:

a. Special conditions: The resistance shall be measured at 25°C ±3°C, and the contacts shall be assembled as in service. Resistance of contacts shall be determined by measuring the potential drop across the contact and the mated printed wiring test board specified on figure 2.

(1) For Types A and AD: At a point .060 ±.030 inch from the connector body, and at a point on the printed wiring test board as shown on figure 2.

(2) Type CR (crimp-wirehole): At a point on the wire .060 ±.030 inch from the connector body solder top at the point where the contact terminal of the mating connector is attached to the printed wiring test board.

b. Test current: 5 amperes dc (ac – rms optional), unless otherwise specified (see 3.1).

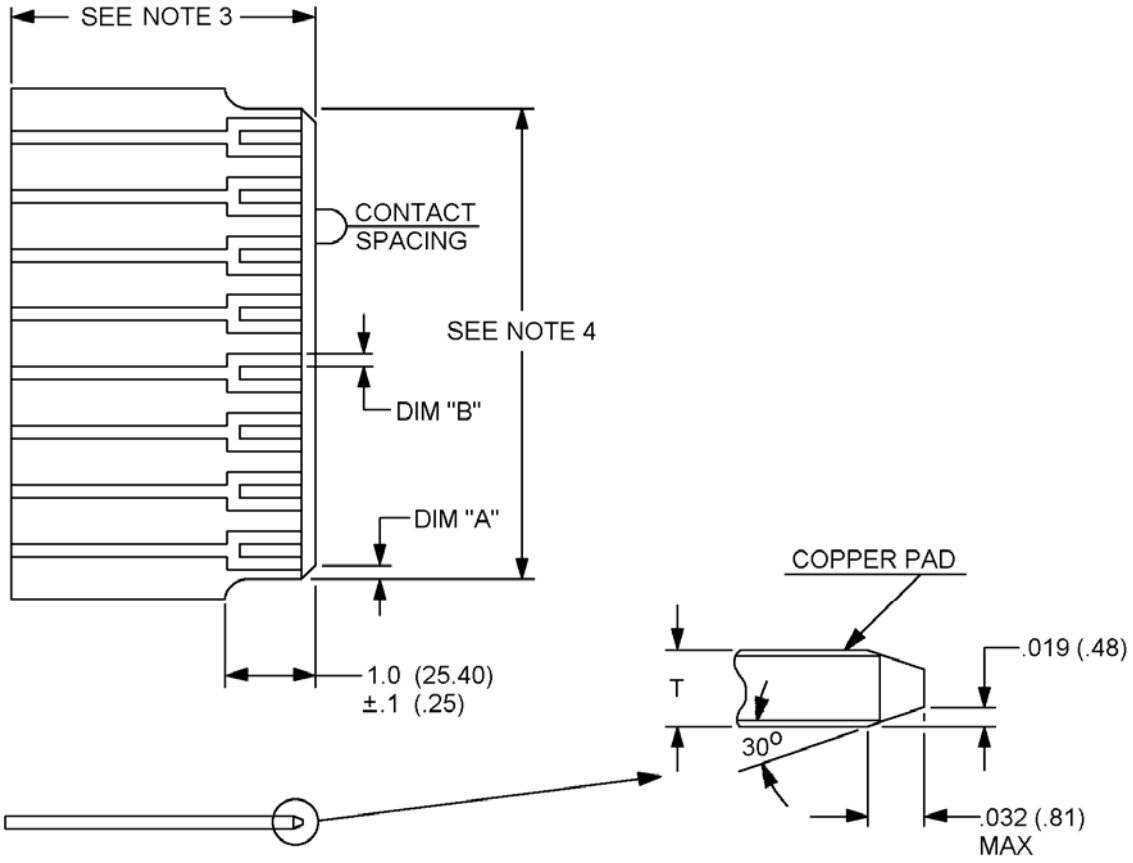

FIGURE 2. Printed wiring test board.

Downloaded from http://www.everyspec.com

Contact spacing ±.005 (0.13) non-accum	Dim A ±.005 (0.13)	Dim B	Dimension T ±.005 (0.13)				
			Size 0	Size 1	Size 2	Size 3	Size 4
.050 (1.27)	.042 (1.07)	.030 ±.003 (0.76 ±0.08)	.031 (0.79)	.047 (1.19)	.062 (1.57)	.093 (2.36)	.125 (3.18)
.075 (1.91)			.031 (0.79)	.047 (1.19)	.062 (1.57)	.093 (2.36)	.125 (3.18)
.100 (2.54)	.093 (2.36)	.052 (1.32)	.031 (0.79)	.047 (1.19)	.062 (1.57)	.093 (2.36)	.125 (3.18)
.125 (3.18)							
.156 (3.96)	.105 (2.67) 1/	.094 (2.39)	.031 (0.79)	.047 (1.19)	.062 (1.57)	.093 (2.36)	.125 (3.18)
.200 (5.08)	.105 (2.67)	.094 (2.39)	.031 (0.79)	.047 (1.19)	.062 (1.57)	.093 (2.36)	.125 (3.18)

1/ M21097/8-4 which is .070 (1.78).

NOTES:
1. Dimensions are in inches
2. Unless otherwise specified, tolerance is ±.005 (0.13 mm) for three place decimals.
3. Test board shall be made of GE062C2/2A11B or equal. The test card shall extend 4.00 (101.60 mm) from the receptacle after insertion.
4. Number of contacts shall be the same as on the corresponding printed wiring connector (see MIL Specification sheet).
5 Contacts shall be specified in IPC-D275, the gold plating shall conform to IPC-D275.
6. Metric equivalents are given for general information only.
7. Millimeters are in parentheses.
8. Printed wiring shall be identical on both sides.

FIGURE 2. Printed wiring test board - Continued.

4.6.6 Engagement and separation forces (board side) (see 3.10). Connectors shall be tested in accordance with 4.6.6.1.1, 4.6.6.1.2 or 4.6.6.2 as applicable.

4.6.6.1 Individual contact engagement and separation forces.

4.6.6.1.1 Test I (see 3.10.1.1). Prior to making measurements, the contacts shall be conditioned by three insertions of a flat, steel gage of maximum thickness. The dimensions of the gage shall be as shown on figure 3. After the above conditioning, the connector half which houses the receptacle contacts shall be supported and a gage of minimum board thickness (see figure 3) aligned with the individual contacts. The forces to insert and separate that gage shall be measured and recorded.

Downloaded from http://www.everyspec.com

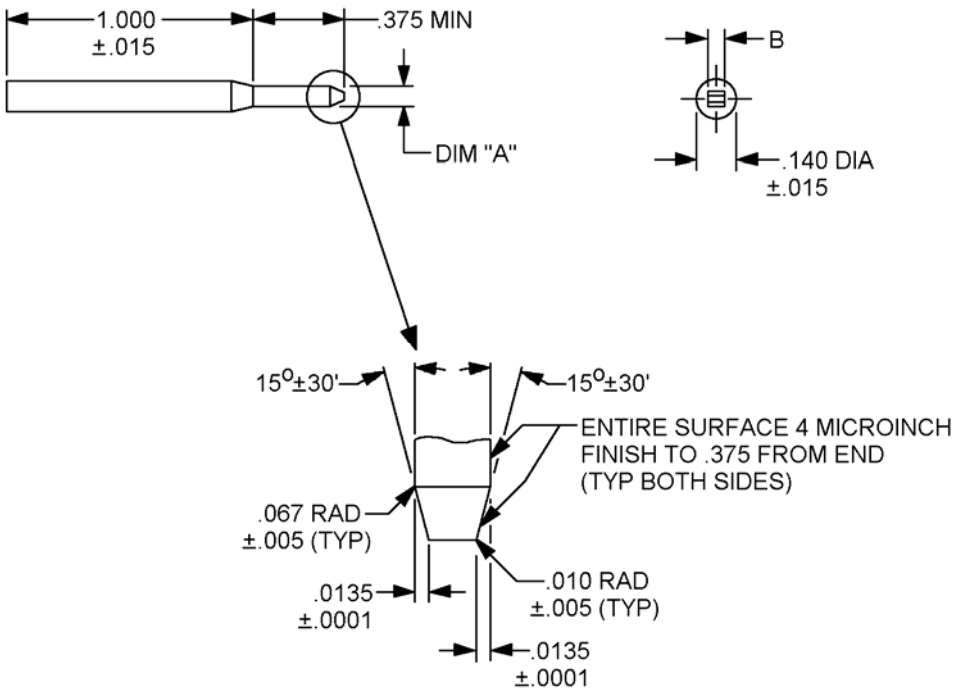

Gage type	Size	Dim "A" ±.0001
Nominal thickness	2	.0620
	3	.0930
	4	.1250
Maximum thickness	2	.0700
	3	.1030
	4	.1350
Minimum thickness	2	.0540
	3	.0840
	4	.1150

Dim "B" ±.001	Contact spacing
.042	.050
.055	.100
.088	.125 & larger

Inches	mm	Inches	mm	Inches	mm
.0001	0.00	.055	1.40	.1030	2.62
.005	0.13	.0620	1.57	.1150	2.92
.010	0.25	.067	1.70	.1250	3.18
.0135	0.34	.0700	1.78	.1350	3.43
.015	0.38	.0840	2.13	.140	3.56
.042	1.07	.088	2.24	.375	9.53
.050	1.27	.0930	2.36	1.000	25.40
.0540	1.37	.100	2.54		

NOTES:
1. Dimensions are in inches
2. Metric equivalents are given for information only.

FIGURE 3. Gages-types A and AD.

Downloaded from http://www.everyspec.com

4.6.6.1.2 Test II (see 3.10.1.2). The connector half which houses the receptacle contacts shall be supported and the gage aligned with the individual contact. The forces to insert and separate that gage shall be measured and recorded. The dimensions of the gage shall be as specified (see 3.1).

4.6.6.2 Total engagement force (see 3.10.2). Connectors shall be tested for total engagement force of the printed circuit board. The engagement shall be accomplished in a manner similar to that which the connectors are subjected to in service. The gage used shall be of maximum thickness as specified on figure 4.

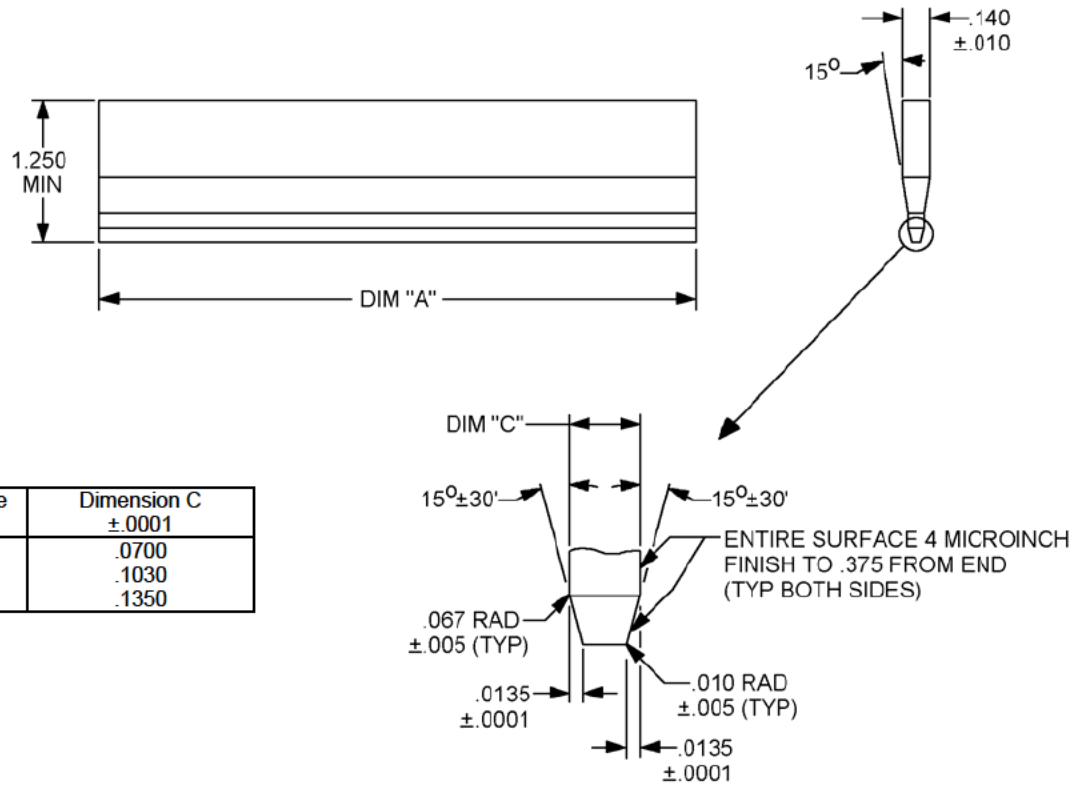

Size	Dimension C ±.0001
2	.0700
3	.1030
4	.1350

Size	"A" dimension for contact spacing			
	.050	.100	.125	.156
06	.342 ±.003	.685 ±.005	.850 ±.010	1.070 ±.156
10	.542	1.085	1.350	1.694
12	.642	1.285	1.600	2.011
15	.742	1.585	1.975	2.475
18	.942	1.885	2.350	2.942
20	1.042	2.085	2.660	3.255
22	1.142	2.285	2.850	3.565
25	1.292	2.585	3.225	4.035
28	--	2.885	3.600	4.502
30	--	3.085	3.850	4.812
36	--	3.685	4.600	5.750
40	--	4.085	5.100	6.374
43	--	4.385	5.475	6.771

FIGURE 4. Edge connector mechanical gages.

Downloaded from http://www.everyspec.com

Inches	mm	Inches	mm	Inches	mm	Inches	mm	Inches	mm	Inches	mm
.0001	0.00	.125	3.18	.850	21.59	1.600	40.64	2.660	67.56	3.850	97.79
.003	0.08	.1350	3.43	.942	23.93	1.694	43.03	2.850	72.39	4.035	102.49
.005	0.13	.140	3.56	1.042	26.47	1.885	47.88	2.885	73.28	4.085	103.76
.010	0.25	.156	3.96	1.070	27.18	1.975	50.17	2.942	74.73	4.385	111.38
.0135	0.34	.342	8.69	1.085	27.56	2.011	51.08	3.085	78.36	4.502	114.35
.050	1.27	.375	9.53	1.142	29.01	2.085	52.96	3.225	81.92	4.600	116.84
.067	1.70	.542	13.77	1.285	32.64	2.285	58.04	3.255	82.68	4.812	122.22
.0700	1.78	.642	16.31	1.292	32.82	2.350	59.69	3.565	90.55	5.100	129.54
.100	2.54	.685	17.40	1.350	34.29	2.475	62.87	3.600	91.44	5.475	139.07
.1030	2.62	.792	20.12	1.585	40.26	2.585	65.66	3.685	93.60	5.750	146.05
										6.374	161.90

NOTES:
1. Dimensions are in inches
2. Metric equivalents are given for information only.

FIGURE 4. Edge connector mechanical gages - Continued.

4.6.7 Temperature cycling (see 3.11). Mated connector assembly, receptacle, and the nominal thickness standard printed wiring test board (see figure 2) shall be tested in accordance with test procedure EIA-364-32. The following details shall apply:

a. Test condition I, 5 cycles. Temperature shall be -65° +0°, -5°C and 125° +3°, -0°C.

b. Measurements during cycling: During the fifth cycle, at temperature specified, the mated connector assembly shall be mated and unmated without use of special tools.

4.6.8 Vibration (see 3.12). Connectors shall be tested in accordance with test procedure EIA-364-28. The following details shall apply:

a. Mounting of specimens: Receptacle and printed wiring board or receptacle and standard printed wiring test board shall be held together by normal means. For example, use of clamping arrangement utilizing the mounting holes and framework to hold the printed wiring board of the standard printed wiring test board rigidly in its respective receptacle is permitted. Wires shall be supported o a stationary frame not closer than 12 inches form the connectors.

b. Electrical-load conditions: All the contacts shall be connected in series to a suitable testing circuit with at least 0.1 ampere flowing through the contacts.

c. Test condition: III.

d. Measurements during and after test: Contacts shall be monitored for continuity during and after the test. Loss of continuity constitutes a failure.

4.6.9 Shock (see 3.13). The completely mated connector assembly, receptacle and printed wiring test board (see figure 2), the composite connector and the printed wiring test board (see figure 2) with the individual contacts assembled, of the composite connector with mating printed wiring board shall be tested in accordance with test procedure EIA-364-27. The following details and exceptions shall apply:

a. Mounting method: All contacts shall be wired with the appropriate size wire. Wires shall be supported on a stationary frame not closer than 12 inches from the connectors. Receptacle and printed wiring board, or receptacle and standard printed wiring test board shall be held together by normal means. For example, use of clamping arrangement utilizing holes and framework to hold the printed wiring board or the standard printed wiring board rigidly in its respective receptacle is permitted.

Downloaded from http://www.everyspec.com

b. Reference surfaces: The shock test shall be repeated in each of the referenced 90° axis positions.

c. Test condition letter: C.

d. Measurements and electrical loading: During test, all of the contacts shall be series wired and connected to a suitable testing circuit with at least 0.1 ampere flowing through the contacts. During and after test, the connectors shall be examined for evidence of mechanical failure of metallic or dielectric materials and for loss of electrical continuity. Following this test, the contacts shall be subjected to the applicable contact engagement and separation forces test specified in 4.6.6.

4.6.10 Bond strength, body assembly (see 3.14). The connector shall be subjected to the bond strength test to determine the adhesive separation force. A test fixture such as specified on figure 5 shall be used to perform the tests. Procedures shall be as follows:

a. Secure lower half of connector in a jig or fixture that is one-third the length of the connector, excluding the mounting ears.

b. Support the connector by its normal mounting means only.

c. Gradually obtain a maximum applied force of 50 pounds, perpendicular to the mating surface of the parts.

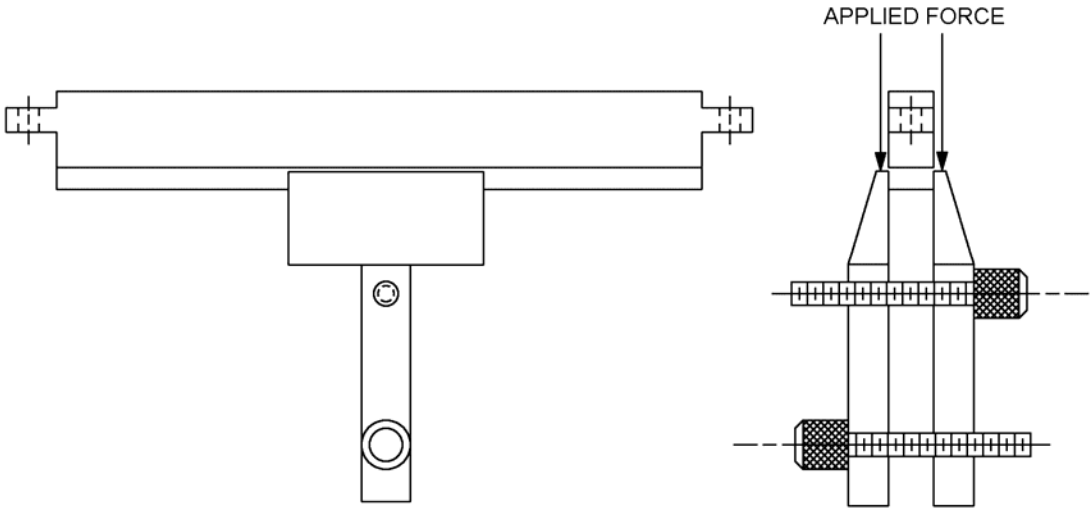

FIGURE 5. Bond strength test.

4.6.11 Contact retention. The contacts shall be inserted into and extracted from each connector using the applicable removal tool (see 3.1). After the tenth insertion, the connector shall be mounted to an appropriate fixture and the straight axial load applied to the wire of the contacts (applicable to wire sizes 22 and larger). The contacts shall be capable of withstanding the applied force.

4.6.12 Board insertion force (overstress) (see 3.16). Connectors shall be tested for high insertion force by inserting the printed wiring test board specified on figure 2 for types A and AD connectors or mating the types CR and CS assemblies and applying an axial force of 50 pounds in the direction of insertion. Connectors shall then be subjected to the engagement and separation forces tests specified in 4.6.6 or 4.6.6.2, as applicable.

Downloaded from http://www.everyspec.com

4.6.13 Humidity (see 3.17). The unmated connector, receptacle and mating half shall be tested in accordance with test procedure EIA-364-31. The following details shall apply:

a. Test condition A, method II.

b. Final measurement – Following this test, the connectors shall be subjected to the insulation resistance test specified in 4.6.3.

4.6.14 Durability (board side) (see 3.18).

4.6.14.1 Types A and AD. The connectors shall be subjected to 500 insertions of a maximum thickness flat steel gage at a rate of 400 to 600 cycles per hour. The dimensions of the gages shall be as specified on figure 3. Upon completion of the conditioning, the resistance of contacts shall be measured as specified in 4.6.5 and the individual contact separation force shall be measure as specified in 4.7.6.1.1.

4.6.14.2 Type CR. Composite connector receptacles and mating contacts assembled on the nominal thickness printed wiring test board as specified (see 3.1) shall be subjected to 500 cycles of insertion and withdrawal at a rate of 400 to 600 cycles per hour. Upon completion of the conditioning, the resistance of contacts shall be measured as specified in 4.6.5 and the individual contact separation force shall be measured as specified in 4.6.6.1.2.

4.6.15 Salt spray (corrosion) (see 3.19). The mated connector receptacle and printed wiring board or receptacle and the nominal thickness standard printed wiring test board shown on figure 2 shall be tested in accordance with test test procedure EIA-364-26, condition B.

4.6.16 Low-signal level contact resistance (see 3.20). Connectors shall be tested in accordance with test procedure EIA-364-23 with the following exception. In lieu of requirement 3 (b), the test samples shall be terminated by two wires on each contact. The connectors shall be mated with the printed wiring board. One of the wires shall provide a (series) current lead circuit between contacts and the second wire shall provide a (parallel) contact resistance (voltage drop) measuring point lead. For test points, see figure 6.

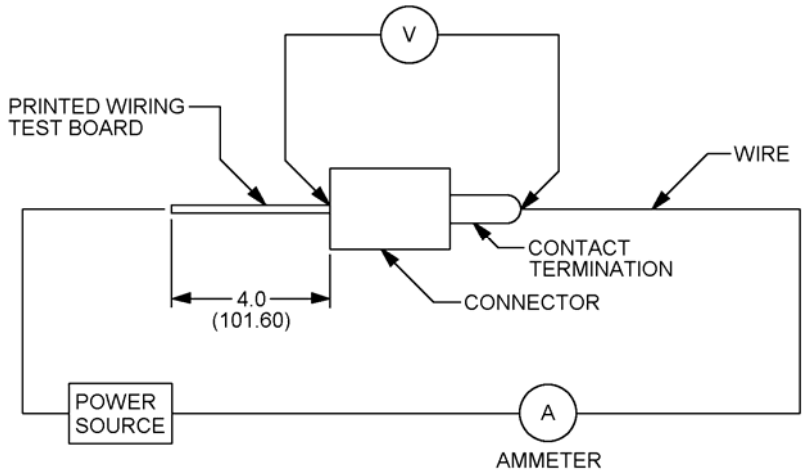

NOTES:
1. Dimensions are in inches
2. Metric equivalents are given for information only.

FIGURE 6. Resistance of contacts – types A and AD.

4.6.17 Crimp resistance (see 3.21). The potential drop across each contact crimp shall be measured at rated current as specified in table VI. Potential drop readings shall be taken across the two points as specified on figure 7. Measurements shall be taken after the temperature of the wire has stabilized and readings shall comply with the initial test values specified in table VI.

Downloaded from http://www.everyspec.com

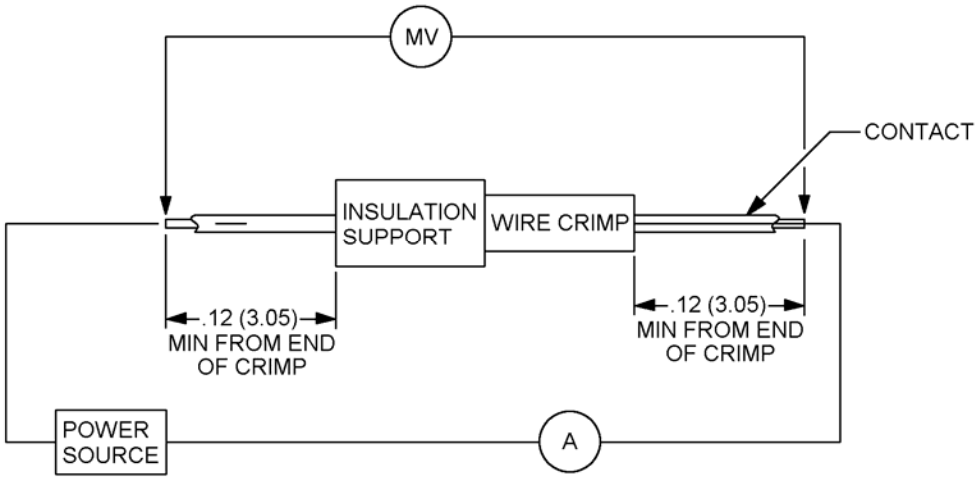

NOTES:
1. Dimensions are in inches
2. Metric equivalents are given for general information only.

FIGURE 7. Crimp contact resistance.

4.6.18 Current cycling (crimp) (see 3.22). Test samples attached to 3-foot lengths of appropriate wire shall be subjected to 50 current cycles. Each cycle shall consist of 30 minutes at 125 percent of the test current specified in table VI, followed by 15 minutes at no load. Voltage drops shall be measured at test current specified in table VI after the test assembly has returned to room temperature.

4.6.19 Crimp tensile strength (type CR) (see 3.23). Samples for test shall be placed in a standard tensile testing machine and sufficient force applied at an approximate rate of 1 inch per minute to pull the wire out of the sample or break the wire or sample.

4.6.20 Solderability (see 3.25). Contact terminals, except wrappost and crimp shall be subjected to method 208 of MIL-STD-202.

4.6.21 Resistance to soldering heat (see 3.26). All connectors with solder terminations shall be tested as specified in method 210 of MIL-STD-202, condition C, except connectors with solder cup terminations shall be tested in accordance with the following details:

a. The applicable wire size properly prepared for the solder cup size shall be inserted into the contact termination. A minimum of seven contacts shall be tested.

b. An appropriately prepared resistance soldering iron with an appropriate tip shall be applied to the lower portion of the solder cup configuration where the wire enters the termination.

c. The solder shall be applied in the normal manner.

d. The resistance soldering iron shall be applied to the system. The wattage shall be adjusted as to obtain a proper solder fillet in a minimum of 4 seconds.

e. After application, the soldering iron shall be removed and a visual and mechanical inspection performed.

f. Visual inspection shall be at 1X. The connector shall show no evidence of distortion or damage to any area of the connector housing. The contact shall meet the contact retention requirement (4.6.6).The contact shall not interfere with normal floating conditions as applicable and shall meet applicable location dimensions.

Downloaded from http://www.everyspec.com

4.6.22 Resistance to solvents (see 3.27). Connectors shall be tested in accordance with test procedure EIA-364-11. The solvents shall be as specified in group 1. The connector tested shall be fully assembled by normal assembly operations.

5. PACKAGING

5.1 Packaging. For acquisition purposes, the packaging requirements shall be as specified in the contract or order (see 6.2). When packaging of materiel is to be performed by DoD or in-house contractor personnel, these personnel need to contact the responsible packaging activity to ascertain packaging requirements. Packaging requirements are maintained by the Inventory Control Point's packaging activities within the Military Service or Defense Agency, or within the Military Service's System Commands. Packaging data retrieval is available from the managing Military Department or Defense Agency's automated packaging files, CD-ROM products, or by contacting the responsible packaging activity.

6. NOTES

(This section contains information of a general or explanatory nature which may be helpful, but is not mandatory.)

6.1 Intended use. These are one piece PWB connectors and do not meet the requirements of two piece PWB connectors as specified in IPC-D275. These connectors are intended to terminate directly to the PWB and are intended for use in, ground support and shipboard electrical and electronic equipment.

6.2 Acquisition requirements. Acquisition documents should specify the following:

a. Title, number, and date of this specification.
b. Title, number, and date of the applicable specification sheet, and the complete PIN (see 1.3).
c. Packaging requirements (see 5.1).

6.3 Qualification. With respect to products requiring qualification, awards will be made only for products which are, at the time of award of contract, qualified for inclusion in QPL No.21097, whether or not such products have actually been so listed by that date. The attention of the contractors is called to these requirements, and manufacturers are urged to arrange to have the products that they propose to offer to the Federal Government tested for qualification in order that they may be eligible to be awarded contracts or orders for the products covered by this specification. Information pertaining to qualification of products may be obtained from the Defense Supply Center Columbus (DSCC-VQ), Document Control Unit, Columbus, OH 43218-3990 or email: vqp.chief@dla.mil .

6.4 Tin whisker growth. The use of alloys with tin content greater than 97 percent, by mass, may exhibit tin whisker growth problems after manufacture. Tin whiskers may occur anytime from a day to years after manufacture and can develop under typical operating conditions, on products that use such materials. Conformal coatings applied over top of a whisker-prone surface will not prevent the formation of tin whiskers. Alloys of 3 percent lead have shown to inhibit the growth of tin whiskers. For additional information on this matter, refer to ASTM B545 (Standard Specification for Electrodeposited Coatings of Tin).

6.5 Subject term (keyword) listing.

Contacts
Crimp
Eyelet
Plug
Receptacle
Solder
Straight thru
Wrappost

Downloaded from http://www.everyspec.com

6.6. Environmentally preferable material. Environmentally preferable materials should be used to the maximum extent possible to meet the requirements of this specification. As of the dating of this document, the U.S. Environmentally Protection Agency (EPA) is focusing efforts on reducing 31 priority chemicals. The list of chemicals is available on their website at http://www.epa.gov/epaoswer/hazwaste/minimize/chemlist.htm. Further information is available at the following EPA site: http://www.epa.gov/epaoswer/hazwaste/minimize/. Included in the EPA list of 31 priority chemicals are cadmium, lead, and mercury. Use of the materials on the list should be minimized or eliminated unless needed to meet the requirements specified herein (see Section 3).

6.7 Changes from previous issue. The margins of this specification are marked with vertical lines to indicate where changes from the previous issue were made. This was done as a convenience only and the Government assumes no liability whatsoever for any inaccuracies in these notations. Bidders and contractors are cautioned to evaluate the requirements of this document based on the entire content irrespective of the marginal notations and relationship to the last previous issue.

CONCLUDING MATERIAL

Custodians:
Army - CR
Navy - EC
Air Force - 11
DLA - CC

Review activities:
Army - AR, AT, AV, CR4, MI
Navy – MC

Preparing activity:
DLA - CC

(Project 5935-2006-069)

NOTE: The activities listed above were interested in this document as of the date of this document. Since organizations and responsibilities can change, you should verify the currency of the information above using the ASSIST Online database at http://assist.daps.dla.mil.