Downloaded from http://www.everyspec.com

INCH-POUND
MIL-DTL-2036E
14 February 2014
SUPERSEDING
MIL-E-2036D(SH)
10 March 1988

DETAIL SPECIFICATION

ENCLOSURES FOR ELECTRIC AND ELECTRONIC EQUIPMENT, NAVAL SHIPBOARD

Reactivated after 29 October 2001 and may be used for new and existing designs and acquisitions.

This specification is approved for use by all Departments and Agencies of the Department of Defense.

1. SCOPE

1.1 Scope. This specification covers requirements for enclosures that house electric and electronic equipment for Naval shipboard use. Details concerning construction, ventilation, cooling, and mechanical protection are included in this specification. This specification also covers that class of explosion proof equipment which will contain any spark or ignition within the enclosure and not permit ignition in the surrounding external atmosphere as a result of normal operation or failure of electrical circuits within the enclosure. This specification is not intended to cover enclosures which form an integral part of equipment such as batteries.

1.2 Classification. Enclosures are of the following classes and types (degree of enclosure), as specified (see 6.2.1):

Class 1 – For other than motors, generators, and similar rotating equipment.

Types:

Airtight	Open, protected
Dripproof (15 degrees)	Splashproof
Dripproof (15 degrees) protected	Splashproof, protected
Dripproof (45 degrees)	Submersible (15 foot)
Dripproof (45 degrees) protected	Submersible (50 foot)
Dust-ignition proof	Submersible (1600 foot)
Dustproof	Open-submersible (15 foot)
Dusttight	Open-submersible (50 foot)
Explosionproof	Open-submersible (1600 foot)
Hermetic	Totally enclosed
Open	Watertight

Comments, suggestions, or questions on this document should be addressed to: DLA Land and Maritime, Attn: VAI, P.O. Box 3990, Columbus, OH 43218-3990, or emailed to RFconnector@dla.mil. Since contact information can change, you may want to verify the currency of this address information using the ASSIST Online database at https://assist.dla.mil.

Downloaded from http://www.everyspec.com

Class 2 – For motors, generators, and similar rotating equipment.

Types:

Airtight	Open
Dripproof (15 degrees)	Open, protected
Dripproof (15 degrees) protected	Splashproof
Dripproof (45 degrees)	Splashproof, protected
Dripproof (45 degrees) protected	Spraytight
Dust-ignition proof	Spraytight (fan cooled)
Dustproof	Submersible (15 foot)
Dusttight	Open-submersible (15 foot)
Explosionproof	Open-submersible (50 foot)
Explosionproof (fan-cooled)	Open-submersible (1600 foot)
Submersible (50 foot)	Totally enclosed
Submersible (1600 foot)	Totally enclosed (fan-cooled)
	Totally enclosed (water-air-cooled)
	Watertight

1.2.1 Fan-cooled Equipment. Equipment designated as fan-cooled is described in MIL-STD-108. Fan-cooled motors, generators, and similar equipment are listed herein because the term fan-cooled is frequently used as a part of the enclosure designation. This specification does not contain separate requirements for fan-cooled equipment. The requirements applicable to explosionproof, spraytight, and totally enclosed motors, generators, and similar equipment also apply respectively to explosionproof (fan-cooled), spraytight (fan-cooled), and totally enclosed (fan-cooled) motors, generators and similar equipment.

2. APPLICABLE DOCUMENTS

2.1 General. The documents listed in this section are specified in sections 3, 4, or 5 of this specification. This section does not include documents cited in other sections of this specification or recommended for additional information or as examples. While every effort has been made to ensure the completeness of this list, document users are cautioned that they must meet all specified requirements of documents cited in sections 3, 4, or 5 of this specification, whether or not they are listed.

2.2 Government documents.

2.2.1 Specifications, standards, and handbooks. The following specifications, standards, and handbooks form a part of this document to the extent specified herein. Unless otherwise specified, the issues of these documents are those cited in the solicitation or contract.

FEDERAL SPECIFICATIONS

L-P-504 - Plastic Sheet and Film, Cellulose Acetate.
L-P-535 - Plastic Sheet (Sheeting): Plastic Strip: Poly (Vinyl Chloride) and Poly (Vinyl Chloride-Vinyl Acetate), Rigid.

FEDERAL STANDARDS

FED-STD-H28/2 - Screw-Thread Standards for Federal Services, Section 2, Unified Inch Screw Threads – UN and UNR Thread Forms.

COMMERCIAL ITEM DESCRIPTIONS

A-A-50552 - Fittings for Cable, Power, Electrical and Conduit, Metal, Flexible.

Downloaded from http://www.everyspec.com

DEPARTMENT OF DEFENSE SPECIFICATIONS

MIL-I-631	-	Insulation, Electrical, Synthetic-Resin Composition, Nonrigid.
MIL-PRF-900	-	Rubber Gasket Material, 45 Durometer Hardness.
MIL-S-901	-	Shock Tests, H.I. (High-Impact): Shipboard Machinery, Equipment and Systems, Requirement for.
MIL-E-917	-	Electric Power Equipment, Basic Requirements (Naval Shipboard Use).
MIL-DTL-7788	-	Panels, Information, Integrally Illuminated.
MIL-DTL-15024	-	Plates, Tags and Bands for Identification of Equipment.
MIL-P-15024/5	-	Plates, Identification.
MIL-S-16032	-	Switches and Detectors, Shipboard Alarm Systems.
MIL-C-19836	-	Coolers, Fluid, Industrial, Air Motor and Generator, Naval Shipboard.

DEPARTMENT OF DEFENSE STANDARDS

MIL-STD-108	-	Definitions of and Basic Requirements for Enclosures for Electric and Electronic Equipment.
MIL-STD-276	-	Impregnation of Porous Metal Castings and Powdered Metal Components
MIL-STD-1472	-	Human Engineering
MIL-STD-1310	-	Shipboard Bonding, Grounding, and Other Techniques for Electromagnetic Compatibility and Safety.
DOD-STD-2143	-	Magnetic Silencing Requirements for the Construction of Nonmagnetic Ships and Craft. (Metric)

(Copies of these documents are available online at http://quicksearch.dla.mil/ or from the Standardization Document Order Desk, 700 Robbins Avenue, Building 4D, Philadelphia, PA 19111-5094.)

2.3 Non-Government publications. The following documents form a part of this document to the extent specified herein. Unless otherwise specified, the issues of documents are those cited in the solicitation or contract.

AMERICAN NATIONAL STANDARDS INSTITUTE (ANSI)

ANSI Z535.3	-	Criteria for Safety Symbols
ANSI Z535.4	-	Product Safety Signs and Labels
ANSI Z535.5	-	Safety Tags and Barricade Tapes (for Temporary Hazards)

(Copies of these documents are available online at http://www.ansi.org or from the American National Standard Institute, 25 West 43 Street, 4th Floor, New York, NY 10036.)

SAE INTERNATIONAL

SAE AMS2175	-	Castings, Classification and Inspection of

(Copies of these documents are available from SAE International, 400 Commonwealth Drive, Warrendale, PA 15096-0001, Tel: 877-606-7323 (inside USA and Canada) or 724-776-4970 of these documents (outside USA), www.sae.org.)

2.4 Order of precedence. Unless otherwise noted herein or in the contract, in the event of a conflict between the text of this document and the references cited herein, (except for related specification sheets), the text of this document takes precedence. Nothing in this document, however, supersedes applicable laws and regulations unless a specific exemption has been obtained.

Downloaded from http://www.everyspec.com

3. REQUIREMENTS

3.1 First article. When specified (see 6.2.3), samples shall be subjected to first article inspection in accordance with 4.3.

3.2 General. Enclosures shall be in accordance with this specification and the requirements of MIL-STD-108.

3.2.1 Basic requirements (see 4.5). The requirements of MIL-E-917 shall apply for the following:

(a) Equipment mounting (HI-shock).
(b) Materials.
(c) Threaded parts and fastening devices.
(d) Treatment and processing of metals for corrosion resistance.
(e) Painting (see 6.3).
(f) Welding.

3.2.2 Nonmagnetic enclosures (see 4.6.1). When equipment is specified or required to be nonmagnetic, the material used shall have a permeability of not greater than 2.0. Enclosures for nonmagnetic ships and craft shall be in accordance with DOD-STD-2143.

3.2.3 Eddy current magnetism (see 4.6.1). Eddy current magnetism requirements apply to nonmagnetic ships and craft only and shall be in accordance with DOD-STD-2143 (see 6.3).

TABLE I. Face areas.

Column 1, 1/	Column 2, 3/	Column 3, 4/	Column 4, 2/, 4/, 5/
Conductivity relative to copper	Thickness of material inches	Cross sectional area in^2	Maximum allowable face area for face of enclosure ft^2
Greater than 10 percent	0.25 to 2 (6.35 to 50.8 mm)	10 to 48 (64.5 to 309.7cm^2)	5 (.465 m^2)
Greater than 10 percent	Less than 0.25 (6.35 mm)	Less than 10 (64.5cm^2)	12 (1.115 m^2)
0.29 to 10 percent	Less than 0.25 (6.35 mm)	Less than 24 (154.8cm^2)	30 (2.787 m^2)
Less than 10 percent	0.25 to 1 (6.35 to 25.4 mm)	24 to 28 (154.8 to 180.6cm^2)	20 (1.858 m^2)
Less than 0.5 percent	Any	Less than 24 (154.8cm^2)	No restrictions

1/ Percentage of conductivity (column 1) refers to the electrical conductivity of the material relative to copper which is rated at 100 percent. Common materials having conductivity greater than 10 percent of that of copper include aluminum, brass, and bronze. Those having less than 10 percent include steel (all types) and nickel-copper-aluminum.
2/ (Column 4). The face of the enclosure is that side which has the largest electrically continuous conducting area.
3/ From the thickness of the material (column 2), determine the maximum allowable area for the face of the enclosure (column 4).
4/ Obtain the cross sectional area of the material (column 3) by taking the product of the thickness of the material and the dimension of the side perpendicular to the face of the enclosure. From the cross-section of the material determine the maximum allowable area for the face of the enclosure (column 4).
5/ Compliance with the less restrictive of the parameters, thickness or cross-section, is satisfactory for determining the maximum allowable face area of the enclosure.

Downloaded from http://www.everyspec.com

3.2.4 Castings. Cast enclosures shall be as specified in 3.2.4.1 through 3.2.4.7.

3.2.4.1 Die castings. Die castings shall not be used where the casting might be subject to impact. Zinc alloy die castings shall not be used where dimensional changes of the casting could affect use of equipment.

3.2.4.2 Porous castings. When required, castings shall be impregnated in accordance with MIL-STD-276.

3.2.4.3 Classification and inspection. Castings shall be classified and inspected in accordance with SAE AMS2175.

3.2.4.4 Inserts. Inserts, which are intended to be cast in place, shall be knurled, grooved, or otherwise prepared to secure satisfactory keying of the insert to the casting. Inserts shall be fabricated from a material which is not adversely affected by exposure to the molten casting alloy. When inserts are located near a casting edge, sufficient edge distance shall be allowed in order to develop the required resistance to insert pull-out, and to avoid cracking of the casting. Casting defects resulting from use of inserts, such as partial alloying, poor bonds, porosity, and cracks shall not be present.

3.2.4.5 Selection and application. In any design utilizing metallic castings, consideration shall be given to intended application, the availability of molding and casting alloys, the choice of a suitable casting process and the use of ribs and fins.

3.2.4.6 Repair of unmachined castings. Repair of minor discontinuities or defects in unmachined or raw castings shall be permitted only when specific approval has been granted by the contractor Material Review Board (MRB), or is specified on the engineering documentation. Weld repair shall be limited to class 3 and class 4 castings (class 1 and class 2 repair shall require procuring activity approval) and to areas where no severe stress will be encountered. Heat treatable alloys shall be fully reheat treated after welding to meet drawing guidelines.

3.2.4.7 Repair of machined castings. Repair of defects in machined castings shall be permitted for class 3 and class 4 castings based on the contractor's MRB decision. Class 1 and class 2 casting repair shall require procuring activity approval. Reheat treatment shall be required unless engineering analysis during MRB action can demonstrate it is unnecessary.

3.2.5 Lifting provisions (see 4.6.3). Enclosures that will weigh more than 75 pounds when equipment is installed within the enclosure shall have lifting eyes integral with the enclosure, or shall be equipped with eyebolts or other lifting provisions, to facilitate lifting and handling of the equipment. Where provisions such as eyebolts are used, their removal shall not leave openings into the interior of the enclosure.

3.2.6 Projections edges and corners (see 4.6.3). Projections and overhanging edges which may cause personal injury or catch upon clothing shall be avoided. Edges and corners of external surfaces shall be rounded to a minimum radius of 0.04 inch (1.02mm), and exposed corners to a minimum of .5 inch (12.7mm).

3.2.7 Mounting details (see 4.6.4). The mounting requirements in accordance with MIL-E-917 and as specified in 3.2.7.1 through 3.2.7.3 shall apply to all enclosures except those forming a part of portable equipment.

3.2.7.1 Enclosed assemblies, subassemblies, and parts. The enclosure shall provide structural support of assemblies, subassemblies, and parts mounted within the enclosure. Mounting bolts for the enclosed assemblies, subassemblies, and parts shall not penetrate the enclosure. Mounting of assemblies, subassemblies, and parts shall be independent of enclosure mounting.

3.2.7.2 Enclosure mounting. The enclosure mounting bolts shall be accessible after the equipment is installed inside. It shall not be necessary to remove assemblies, subassemblies, and parts before

Downloaded from http://www.everyspec.com

removing the enclosure from bulkhead or deck. Enclosure weight shall be transmitted to the ship's structure and not be borne by the walls of the enclosure. Sway bracing shall be provided for any unit which is susceptible to deflections of .5 inch (12.7mm) or more due to vibration or shock.

3.2.7.3 Spot facing. In the case of equipment intended for permanent installation and having mounting feet of cast, uneven or rounded material, the material around the mounting bolt holes shall be spot faced to accommodate washers and mounting bolts.

3.2.8 Access. Enclosures shall provide for convenient access to terminals and all working parts for the purpose of installation, repair, and adjustment.

3.2.8.1 Access to nonrotating equipment. Access to wiring on the back of a panel shall be made possible by providing a means of removal of the panel through access covers or doors on the front of the enclosure. Access for replacement of parts shall be possible from the front of the enclosure without disassembly of the cabinet or the removal of any permanently mounted subassembly or part.

3.2.8.1.1 Access for electronic equipment. For electronic equipment, access shall be from the front. Each article of equipment, and each major subassembly forming a part thereof, shall provide for the necessary access to its interior parts, terminals, and wiring for adjustments, required circuit checking, and the removal and replacement of maintenance parts. Accessibility for testing and replacement does not apply to parts located in nonrepairable subassemblies or assemblies. For routine servicing and maintenance, unsoldering of wires, wire harnesses, parts, or subassemblies shall not be required in order to gain access to terminals, soldered connections, mounting screws, and the like. Inspection windows shall be provided where necessary. Sizes of openings, maximum reach guidelines, and allowable sizes and weights of replaceable assemblies shall conform to limits established in MIL-STD-1472.

3.2.8.1.1.2 Connections. Connections to parts inside a removable container shall be arranged to permit removal of the container without threading connection leads through the container.

3.2.8.1.1.3 Parts. Parts which are identified as replaceable parts shall not be mounted by means of rivets, spot welding, or hard curing compounds. No unsoldering or soldering of connections shall be necessary when the front panel, or any subchassis, is removed for maintenance purposes. Design shall be such that where plug-in modules or assemblies are used, they can be easily inserted in the proper location when correctly oriented without damage to equipment or parts being engaged.

3.2.8.1.1.4 Enclosures. Accessibility to chassis, assemblies, or parts contained within cabinets, consoles, or other enclosures shall be provided from outside the basic equipment through the use of access doors, by mounting such items on withdrawal slides, swinging doors, through cable extenders and cable retractors, provisions for circuit card extenders which will allow part or module operation in the open position, or other arrangements to permit adequate access for properly servicing the equipment. Automatic or manually operated locks shall be provided to lock the chassis in the servicing position. When withdrawal slides are used they shall be of guided sectional construction with tracks and rollers. Complete removal and access for servicing of electronic equipment contained within cabinets, consoles, or other enclosures shall be provided from either the front or rear of the equipment. Guide pins, or locating pins, or the equivalent, shall be provided for mechanical alignment during mounting. Shipboard equipment shall have complete access for maintenance and servicing from the front of the equipment.

3.2.8.1.1.5 Bolt-together racks and enclosures. For Navy ship and shore applications, when bolt-together racks are required, fastening shall be provided to bolt adjacent racks together at the top with external brackets and through the bottom of the rack to a base or foundation. Bottom mounting shall be accessible from the front with minimum disassembly of internal parts or subassemblies.

3.2.8.1.1.6 Compatibility. Equipment shall be designed for optimum accessibility compatible with operating, maintenance, electromagnetic compatibility, and enclosure requirements.

Downloaded from http://www.everyspec.com

3.2.8.1.1.7 Parts. If, in order to check or remove a part, it is necessary to displace some other part, the latter part shall be so wired and mounted that it can be moved without being disconnected and without causing circuit detuning or instability

3.2.8.1.2 Access doors and covers.

3.2.8.1.2.1 Large enclosures. Enclosures of 1-1/2 cubic feet and larger shall have hinged doors which may be removable, except for the doors on explosionproof enclosures. Hinges shall be attached such that they will not extend beyond the outer surface of the enclosure whether or not the doors are open. Doors on explosionproof, watertight, or submersible enclosures shall be secured by captive screws requiring the use of tools. Doors on enclosures other than explosionproof, watertight, or submersible shall be secured by captive thumbscrews or other slotted or cross recessed head type fasteners with all parts captive. Captive hardware shall be in accordance with MIL-E-917. Covers larger than 4 square feet (ft^2) or weighing more than 35 pounds shall have handles attached for safe and easy installation or removal.

3.2.8.1.2.2 Small enclosures. Enclosures smaller than 1-1/2 cubic feet may have removable covers without hinges provided that no electrical devices are mounted on the cover. Either captive or noncaptive fastener hardware may be used to secure doors and covers of small enclosures.

3.2.8.1.3 Door and cover fastener hardware. Fasteners used to secure a cover or door shall be of the same type and size. Except where thumbscrews are required, head styles of door and cover screws and bolts shall be as follows:

(a) Screws and bolts .25-inch (6.35mm) diameter and larger: hexagon-head or slotted hexagon head.
(b) Screws and bolts smaller than .25-inch (6.35mm) diameter: slotted head, or cross recessed head, or any style specified in MIL-E-917.

3.2.8.1.4 Gaskets for covers and doors. Gaskets shall be provided for covers and doors of enclosures as required to meet the degree of enclosure. Gaskets may be provided for other enclosures at the option of the manufacturer. Unless otherwise specified in the equipment specification, gaskets shall be in accordance with MIL-PRF-900. Gaskets shall be secured to prevent dislodging or loosening when the door or cover is removed. Adhesive may be used for securing the gasket to one of the mating parts. An antistick material, such as powdered Teflon compound, shall be applied to the unsecured face of gaskets. Silicone grease shall not be used. Antistick compounds shall be nongumming, nonhardening, nonflammable, and insoluble, and shall be thermally and chemically stable under the conditions of use, (see A.3.2.2 for limitation for explosionproof enclosures).

3.2.8.1.5 Hinged door or cover ground connections. Where energized parts are to be mounted on a hinged door or cover, the door or cover shall be connected to the enclosure structure by a low resistance, flexible grounding strap. The strap shall have a current carrying capacity at least as great as that of the largest lead to the door mounted device. Reliance on mounting screws or hinges to complete the ground connection shall not be permitted. The ground strap shall be located so that it cannot come in contact with electrical parts.

3.2.9 Access to rotating equipment. Access openings for equipment containing brushes, heaters and airbags shall be of sufficient size and properly located to allow the following functions:

(a) Inspect and replace brushes.
(b) Adjust, replace, or measure brushholder spring tension, heaters, air bags.
(c) Stone commutator or collector rings.

Fastener hardware and access cover gaskets shall be as specified (see 3.2.8.1.2 and 3.2.8.1.3).

Downloaded from http://www.everyspec.com

3.2.10 Cable entrance.

3.2.10.1 Nonrotating equipment. Where details of the provisions for cable entrance to the enclosed equipment are not specified in the equipment specification, space shall be provided as suitable locations at the top and bottom of the enclosure for installation of cable clamps, stuffing tubes or connectors. For open, and open protected types, and any other enclosure not requiring stuffing tubes and when cable clamps are necessary to prevent chafing, the following shall apply:

(a) Metal enclosures shall have provision for installation of cable clamps specified in A-A-50552.
(b) Plastic enclosures shall have provision for installation of electrically insulated cable clamps, and be grounded in accordance with MIL-STD-1310.

3.2.10.2 Rotating equipment. Provision for cable connections shall be as required by the equipment specification. Where provisions are not specified, they shall be in accordance with 3.2.10.1(b).

3.2.11 Protection against burning area. Interior surfaces which are in the wake of arcing contacts or where an arc may cause short circuits between current-carrying parts, or between such parts and the enclosure, shall be protected by sheets of laminated electrical insulating material conforming to MIL-E-917. These sheets shall be secured to the enclosure surfaces by mechanical means rather than by adhesives.

3.2.12 Protection of diagrams and instruction sheets. Where diagrams or instruction sheets are required on or in the equipment by the equipment specification, or are otherwise so furnished, such diagrams or instruction sheets shall be protected as specified in (a) or (b). Printing shall be of a non-fading type. Diagrams and instruction sheets shall be secured to the inside of the enclosure by rivets, screws, clips, mounting plate or brackets. Screws or rivets used to secure instruction sheets shall not penetrate airtight, dusttight, hermetic, explosionproof, splashproof, watertight, or submersible enclosures.

(a) Method 1 (preferred method): The diagram or instruction sheets shall be laminated between sheets of vinyl chloride plastic conforming to class 1 of L-P-535. The laminating process shall be such that a permanent bond is obtained between the paper and the plastic. Where the reproduction process is such that a bond between the vinyl chloride and paper cannot be readily attained, cellulose acetate plastic conforming to type I of L-P-504 or ethyl cellulose plastic may be used.
(b) Method 2: The paper on which the diagram or instruction sheet is printed shall be treated so as to have acceptable oil, water, and fungus resistant properties. The diagram or instruction sheet shall be covered with a sheet of vinyl chloride plastic conforming to class 1 of L-P-535.

3.2.13 Explosionproof enclosures. Explosionproof enclosures shall be in accordance with the appendix to this specification, and as specified herein.

3.2.14 Provision for drainage of condensation. The following enclosures shall be provided with an opening for draining accumulated moisture:

(a) Watertight enclosures for nonrotating equipment except watertight enclosures for pushbuttons, limit switches, and similar types of remote master switches.
(b) Spraytight, totally enclosed, and watertight enclosures for rotating equipment, except that connection boxes of such enclosures need not have provision for drainage.

The opening shall be located at the bottom or as near the bottom of the enclosure as practicable, in order that it may drain the enclosure satisfactorily. A .25 by 18 National Pipe Thread (NPT) or larger pipe plug made of brass or other non-corrosive material shall be used to close the opening. For HI shock enclosures straight threads shall be used.

3.2.14.1 Number and location. Enclosures requiring a condensate drain shall be such that effective gravity drain will be achieved with only one drain hole with the enclosure mounted in its normal orientation

Downloaded from http://www.everyspec.com

in respect to the vertical axis. Enclosures designed for optional mounting in more than one orientation may need to be equipped with more than one drain hole; however, the lowermost hole shall effectively drain the entire enclosure in whatever optional orientation the enclosure is mounted. The lowermost drain plug shall be directly accessible with adequate space for wrenching when the equipment is installed in its operating environment aboard ship; that is, access space shall be provided that will enable a man using only his hands and an 8-inch adjustable end wrench to remove and replace the effective drain plug in whatever optional orientation the equipment is installed.

3.2.15 Prevention of leakage along shafts of spraytight and watertight rotating equipment. Except where integral face-mounted equipment forms a part of the complete assembled equipment enclosure and eliminates shaft exposure, a means shall be provided, as applicable (see 3.2.15.1 or 3.2.15.2), to prevent water leakage along the shaft where it penetrates the enclosure.

3.2.15.1 Spraytight. Either of the following leakage preventative methods shall be used to minimize shaft leakage of rotating equipment:

(a) A combination of shaft slinger and close clearances between the shaft and housing. The slinger shall be located immediately outside the housing. The external diameter of the slinger shall be not less than 1.5 times the shaft diameter and the axial clearance between the end shield and slinger shall not exceed 0.030 inch (.0762mm). The slinger shall be attached to the shaft using a set screw or screws. A filler compound may be used to prevent leakage of water through the fit between the slinger and shaft. The close clearance between the housing and shaft shall be in accordance with table II. To break up the capillary path of leakage flow through the clearance between the shaft and the housing at least one peripheral (radial in depth) groove shall be cut in the housing. The slinger shall be provided with a guard, except that if the slinger end shield or the coupled equipment design is such as to preclude personal injury, the guard may be omitted. If the slinger is exposed, omission of the guard shall require the approval of the contracting activity. Slinger guards, where used, shall permit the expulsion of water.

TABLE II. Shaft clearance for spraytight machines.

Shaft diameter inches	Radial clearance maximum	Axial length of clearance
Less than 1 (2.54mm)	7 mils per inch of shaft diameter (.178mm)	.375 inch (9.525mm)
1 to 4 (2.54 to 101.6mm)		.5 inch (12.7mm)
Over 4 (101.6mm)	As approved by contracting activity	

(b) A rubbing seal between the shaft and housing. If a rubbing seal is used, the closure shall be watertight.

3.2.15.2 Watertight. A rubbing seal between the shaft and housing shall be used except where integral face mounted equipment forms a complete watertight assembly.

3.2.15.3 Totally enclosed. When specified in the contract or order, or the individual equipment specification (see 6.4), the enclosure shall be such that it can be converted to watertight (see 3.2.15.2) by the addition of gaskets.

3.2.16 Totally enclosed, water-air-cooled motors and generators. Totally enclosed, water-air-cooled motors and generators shall be provided with an air cooler of double tube construction to insure against water leakage into the windings of the machine.

3.2.16.1 Air coolers. Unless otherwise specified (see 6.2.1), air coolers shall conform to class 1, 2, or 3 of MIL-C-19836 as required by the individual equipment specification or as specified (see 6.4).

Downloaded from http://www.everyspec.com

3.2.16.2 Drain temperatures. The cooler shall maintain the machine temperatures within the specified limits under the maximum load conditions except overloads having a specified duration of 5 minutes or less when the cooler is supplied with sea water at an initial temperature of approximately 85°F (29.4°C).

3.2.16.3 Air temperature alarm. An air temperature alarm thermostatic switch conforming to type 1C/N31A of MIL-S-16032 shall be provided and located so as to operate at a predetermined temperature of the air exhausting from the electric machine into the cooler.

3.2.16.4 Air filter. Machines having commutators shall have an air filter for removing carbon dust from recirculating air through the machine and heat exchanger.

3.2.17 Protected enclosure. Sheet expanded metal, where used to limit the size of enclosure openings, shall have a nominal width of opening not in excess of .5 inch (12.7mm) and a nominal thickness, exclusive of coating, of not less than .469 inch (1.19mm).

3.2.18 Interface requirements for enclosures. While complying with requirements as specified herein, an enclosure obtained as an integral portion of an equipment or system, and in its service environment, shall effectively perform its intended functions and interface both with the equipment it encloses and the system in which the equipment is used. When furnished separately from the equipment or system in which it is applied, all applicable interfaces and environmental requirements shall be as specified (see 6.2.1 and 6.3).

3.2.18.1 Seals and special screws. When it is possible to energize equipment in a disassembled or partially assembled condition, seals or screws used shall require a special tool for removal. The special tool shall be furnished with the enclosure. (Special tools are defined as those tools not listed in the Federal Supply Catalog).

3.2.18.2 Interlock. The requirements of 3.2.18.1 do not apply when an interlocking device is used to open live circuits before access is gained.

3.2.19 Equipment specification requirements. Additional design details for enclosures of specific equipments shall be as required by the equipment specification. Requirements of the equipment specification may affect enclosure design (for example, electromagnetic interference limitations, high impact shock, vibration, salt spray and nature and design features of the equipment contained within the enclosure) (see 6.3).

3.3 Materials. Enclosures shall be constructed of either a corrosion-resisting material or a noncorrosion-resisting material that has been protected against corrosion in accordance with MIL-E-917.

3.3.1 Prohibited materials. Unless otherwise specified (see appendix), asbestos, cadmium and mercury shall not be used in construction of enclosures covered by this specification.

3.3.1.1 Mercury. Mercury shall not be used in manufacturing and test processes (including test equipment such as mercury thermometers) applying to the basic enclosure but may be used in manufacturing and test processes for materials and parts provided it is used in such a way that contamination of the materials and parts themselves cannot result.

3.3.2 Recovered materials. Unless otherwise specified herein, all equipment, material, and articles incorporated in the products covered by this specification shall be new and may be fabricated using materials produced from recovered materials to the maximum extent practicable without jeopardizing the intended use. The term “recovered materials” means materials which have been collected or recovered from solid waste and reprocessed to become a source of raw materials, as opposed to virgin raw materials. None of the above shall be interpreted to mean that the use of used or rebuilt products is allowed under this specification unless otherwise specifically specified.

Downloaded from http://www.everyspec.com

3.4 Marking.

3.4.1 Plates for identification and information. Plates for identification and for information (including plates for warning and caution) shall be in accordance with MIL-DTL-15024 and MIL-P-15024/5 and the requirements herein.

3.4.2 Type of service. The requirements of MIL-P-15024/5 for plates for normal service shall apply, except that for plates to be used in locations exposed to the weather, the requirements of MIL-P-15024/5 for severe service shall apply.

3.4.3 Mounting of plates. Plates shall be mounted by means of screws in tapped holes, screws held by captive nuts, screws held by nuts on the opposite side of the panel (unless otherwise prohibited) or by self tapping screws. Aluminum screws shall not be used.

3.4.4 Color style of plastic plates. The color style of plastic plates shall be style II of MIL-DTL-15024 except as otherwise specified herein or in the individual equipment specification (see 3.4.5.2 and 6.4).

3.4.5 Types of plates.

3.4.5.1 Identification plates. Identification plates shall be in accordance with types A, B, C, or H (metallic only) of MIL-DTL-15024.

3.4.5.1.1 Identification markings. Identification plates shall be marked with the following as a minimum:

(a) Manufacturer's name or trademark.
(b) Name of unit, model, and serial or military part number.
(c) Rating of unit.
(d) Prime contract number (as specified in contract or order).
(e) Degree of enclosure (type, see 1.2).

3.4.5.2 Information plates. Except for illuminated plates for darken-ship operation (see 3.4.5.5), plates for stating the functions of manual control devices and visual indicators, and to show writing and schematic diagrams, operating instructions, lists of tools, warning, caution, and the like, shall be in accordance with types A, B, C, F, or H of MIL-DTL-15024. Where the need to change the information from time to time exists, the plates may be held in slide-out frames. Type F plates shall be laminated, using transparent polyester sheets conforming to type G of MIL-I-631, treated, bonded, and sealed to each side of the printed sheet. Edge sealing alone is not acceptable. The thickness of the polyester sheet shall be at least 0.04 millimeter (mm). The overall thickness of the plate shall be at least 0.25 mm.

3.4.5.3 Warning and caution. Where the non-observance of instructions on plates would result in personal injury of material damage, the words "WARNING" or "CAUTION" shall immediately precede the instructions, and be marked in double-size red letters in accordance with the following:

(a) "WARNING": Where non-observance would result in personal injury or loss of life, whether or not damage to the equipment would occur.
(b) "CAUTION": Where non-observance would result in damage or destruction of the equipment or inadvertently shut down the propulsion of plant.

3.4.5.4 High voltage. Enclosures containing potentials in excess of 500 volts alternating current (Vac) root mean square (rms) or 500 volts direct current (Vdc) shall be identified by plates. The plates shall be marked to indicate the hazard which may be present upon removal. The markings shall be as permanent as the normal life expectancy of the equipment on which they are affixed. The markings shall be in accordance with ANSI Z535.3, ANSI Z535.4, or ANSI Z535.5 and contain the single word "DANGER", the descriptive words "High Voltage" and the maximum voltage applicable (e.g., High Voltage 550 VAC).

Downloaded from http://www.everyspec.com

3.4.5.5 Illuminated plates. Illuminated plates, when required for darken-ship operation, shall be type IV or V of MIL-DTL-7788 (see 6.3). Dual lampholders shall be used for visual indicators.

3.5 Drawings. When specified in the contract or order, drawings shall be prepared (see 6.2.2 and 6.3).

3.6. Workmanship.

3.6.1 Cleaning. After fabrication, parts and assembled equipment shall be cleaned of smudges; loose, spattered, or excess solder; weld metal; metal chips and mold release agents; or any other foreign material which might detract from the intended operation, function, or appearance of the equipment.

3.6.2 Threaded parts or devices. Screws, nuts, and bolts shall show no evidence of cross threading, mutilation, or detrimental or hazardous burrs, and shall be firmly secured.

3.6.3 Bearing assemblies. Bearing assemblies shall be free of rust, discoloration, and imperfections of ground, honed, or lapped surfaces. Contacting surfaces shall be free of tool marks, gouge marks, nicks, or other surface type defects. There shall be no detrimental interference, binding, or galling.

3.6.4 Wiring. Wires and cables shall be positioned or protected to avoid contact with rough or irregular surfaces and sharp edges and to avoid damage to conductors or adjacent parts.

3.6.5 Shielding. Shielding on wires and cables shall be secured in a manner that will prevent it from contacting or shorting exposed current-carrying parts. The ends of the shielding or braid shall be secured to prevent fraying.

3.6.6 Harness, cable and wire.

3.6.6.1 Containment. The harness and cable form containment means shall be neat in appearance, uniformly applied, and positioned to retain critical form factors and breakout locations. The containment means, (lacing, ties, tie down straps, etc.) shall not cause the wire or cable insulation to deform so that performance characteristics are adversely affected.

3.6.6.2 Insulation. There shall be no evidence of burns, abrading, or pinch marks in the insulation that could cause short circuits or leakage.

3.6.6.3 Clearance. The clearance between wires or cables and heat generating parts shall be sufficient to minimize deterioration of the wires or cables.

4. VERIFICATION

4.1 Classification of inspection. The inspection requirements specified herein are classified as follows:

a. First article inspection (see 4.3).
b. Conformance inspection (see 4.4).

4.2 Examination, tests, and sampling. When enclosures are furnished as part of the electrical or electronic equipment, enclosure tests shall be as specified in the equipment specification and conducted as part of the tests required on the equipment. When furnished separately from the equipment or system in which they are applied (see 6.3), enclosures shall be subjected to the examination and tests of 4.4, 4.5 and 4.6.

4.3 First article inspection (see 6.2.3). First article inspection shall be performed on one complete enclosure which is representative of the production item, after award of the contract, to determine that the production item meets the requirements of this specification.

Downloaded from http://www.everyspec.com

4.3.1 Visual inspection. Enclosures shall be examined to ensure conformance with this specification. First article inspection shall be performed to assure compliance with the following requirements:

a. Materials (see 3.2.1).
b. Marking (see 3.4).
c. Workmanship (see 3.6.1).

4.4 Conformance inspection.

4.4.1 Inspection of product for delivery. Inspection of product for delivery shall consist of individual inspections specified in 4.5 and 4.6.

4.4.2 Inspection sample. Unless otherwise specified in the individual equipment specification, conformance inspection shall be performed on each item offered for delivery.

4.5 Basic inspections (see 3.2.1). Enclosures shall be examined to ensure conformance to following requirements in accordance with MIL-E-917:

(a) Equipment mounting (HI-shock).
(b) Materials.
(c) Threaded parts and fastening devices.
(d) Treatment and processing of metals for corrosion resistance.
(e) Painting (see 6.3).
(f) Welding.

4.6 Examination and test.

4.6.1 Nonmagnetic enclosures. Nonmagnetic enclosures conforming to DOD-STD-2143 shall meet the requirements of 3.2.2 and 3.2.3.

4.6.2 Classification and inspection. Castings shall be classified and inspected in accordance with SAE AMS2175 and shall meet the requirements of the individual equipment specification.

4.6.3 External examination. Enclosures shall be examined to ensure conformance to 3.2.5 and 3.2.6.

4.6.4 Mounting details. Enclosures shall meet the requirements in MIL-E-917 and 3.2.7.1 through 3.2.7.3.

4.6.5 Effectiveness of enclosure (protection against environmental conditions). Test procedures to determine the effectiveness of enclosures shall be in accordance with MIL-STD-108.

4.6.6 Explosionproofness. The quality assurance provisions for explosionproof enclosures shall be as specified in the appendix to this specification.

5. PACKAGING

5.1 Packaging. For acquisition purposes, the packaging requirements shall be as specified in the contract or order (see 6.2). When packaging of material is to be performed by DoD or in-house contractor personnel, these personnel need to contact the responsible packaging activity to ascertain packaging requirements. Packaging requirements are maintained by the Inventory Control Point's packaging activities within the Military Service or Defense Agency, or within the Military Department's System Command. Packaging data retrieval is available from the managing Military Department's or Defense Agency's automated packaging files, CD-ROM products, or by contacting the responsible packaging activity.

Downloaded from http://www.everyspec.com

6. NOTES

(This section contains information of a general or explanatory nature which may be helpful, but is not mandatory).

6.1 Intended use. It is intended that this specification be invoked in individual equipment specifications for enclosures for electrical and electronic enclosures. This specification covers the basic requirements applicable to enclosures intended for Naval shipboard use. Minimum degrees of enclosure that are intended to protect contents of the enclosures in typical environments are listed in table III. A lesser degree of enclosure may be satisfactory for a particular application if the equipment itself is inherently protected (such as by encapsulation) or does not require complete exclusion of a potentially harmful element in order to perform satisfactorily; however, such determination will be made, or approved, by the contracting activity responsible for establishing technical requirements. Explosionproof enclosures are required for electric and electronic equipment in hazardous locations (explosive gases or vapors present) regardless of other environmental conditions. Additional protection of explosionproof enclosures, if required, should be obtained by the use of shields or baffles. An exception to the requirement for explosionproof enclosures in hazardous location is the case of “intrinsically safe” installations. An intrinsically safe installation (one in which the energy level is limited to values that preclude ignition of explosive atmospheres) requires the approval of the contracting activity.

Downloaded from http://www.everyspec.com

TABLE III. Enclosures intended use.

Environment	Degree of enclosure (nomenclature)		Notes
	Nonrotating equipment	Rotating equipment	
Harmless to equipment	Open	Open	
	Open, protected	Open, protected	1/
	Dripproof (15 degrees)	Dripproof (15 degrees)	
	Dripproof (15 degrees) protected	Dripproof (15 degrees) protected	1/, 2/
	Dripproof (45 degrees)	Dripproof (45 degrees)	
	Dripproof (45 degrees) protected	Dripproof (45 degrees) protected	1/, 2/
Dirty: dust and moderate amounts of steam and vapors	Totally enclosed	Totally enclosed Totally enclosed (fan-cooled) Totally enclosed (water-air-cooled)	1/, 3/ ,4
Weather exposure (above main deck)	Watertight 1/	Spraytight 1/ Spraytight (fan-cooled 1/)	1/ where indicated 4/
Spray, occasional splashing or hosing Sprinkler system protected areas with drains	Watertight 1/ Splashproof Splashproof , protected1/		
Transient submergence or severe splashing	Watertight	Watertight	1/, 5/
Submergence	Submersible (feet)	Submersible (feet)	1/, 6/
	Open submersible (feet)	Open submersible (feet)	6/
Potentially explosive atmosphere (group D)	Explosionproof Explosionproof	Explosionproof Explosionproof (fan-cooled)	1/, 4/
Special conditions not normally found in shipboard environment	Airtight Dust-ignition proof Dustproof Dusttight Hermetic	Dust-ignition proof Dustproof Dusttight	1/

NOTES:

1/ Enclosure provides protection of personnel against physical contact with electrically energized or moving parts.
2/ Normally used for equipment located in machinery spaces aboard ship, except where more severe conditions prevail.
3/ Common enclosure for pump motor applications aboard ship, except where submergence or explosionproofness is required. Motor specifications require a shaft slinger for pump applications.
4/ Fan-cooled rotating equipment not suitable in weather exposed locations because icing conditions could cause failure or malfunction.
5/ Suitable for equipment on ship's decks which may be awash in heavy seas.
6/ Select submergence depth (15, 50 or 1600 feet) as applicable. (4.6, 15.2 or 487.7 meters)

Downloaded from http://www.everyspec.com

6.2 Ordering data.

6.2.1 Acquisition requirements. Acquisition documents should specify the following:

(a) Title, number, and date of this specification.
(b) Class and type of enclosure (see 1.2).
(c) Class of air cooler required if other than as specified (see 3.2.16.1).
(d) Applicable interface and environmental requirements for enclosures furnished separately from equipment or system (see 3.2.18).
(e) Whether application for explosionproof design evaluation should be submitted to the Defense Contract Management Agency (DCMA), the contracting activity, or Naval Sea Systems Command (NAVSEA) (see A.4.1.1).
(f) Level of packing required.

6.2.1.1 Data delivery. Data delivery of drawings, procedures, reports, etc. defined within this specification or appendix can only be required by the associated contract or purchase order. No data delivery can be required by this specification. For guidance on ordering data see 6.2.2.

6.2.2 Data requirements. When this specification is used in an acquisition and data are required to be delivered, the data requirements identified below should be developed as specified by the individual equipment specification and delivered in accordance with the approved Contract Data Requirements List (CDRL), incorporated into the contract. When the provisions of DoD FAR Supplement, Part 27, Sub-Part 27.475-1 (DD Form 1423) are invoked and the DD Form 1423 is not used, the data specified below should be delivered by the contractor in accordance with the contract or purchase order requirements. Deliverable data required by this specification are cited in the following paragraph.

Paragraph no.	Data requirement title	Applicable DID no.
3.5	Drawings, engineering and associated lists	DI-DRPR-81001

(Data item descriptions related to this specification, and identified in section 6 will be approved and listed as such in the Acquisition Streamlining & Standardization Information System (ASSIST). Copies of data item descriptions required by the contractors in connection with specific acquisition functions should be obtained from the Naval Publications and Forms Center or as directed by the contracting officer.)

6.2.2.1 Data requirement waiver. The data requirements of 6.2.2 and any task in sections 3, 4, or 5 of this specification required to be performed to meet a data requirement may be waived by the contracting/acquisition activity upon certification by the offeror that identical data were submitted by the offeror and accepted by the Government under a previous contract for identical item acquired to this specification. This does not apply to specific data which may be required for each contract regardless of whether an identical item has been supplied previously (for example, test reports).

6.2.3 First article. The contracting officer should include specific instructions in acquisition documents regarding arrangements for examinations, approval of first article test results, and disposition of first article samples. Invitations for bids should provide that the Government reserves the right to waive the requirement for samples for first article inspection to those bidders offering a product which has been previously acquired or tested by the Government, and that bidders offering such products, who wish to rely on such production or test, must furnish evidence with the bid that prior Government approval is presently appropriate for the pending contract.

6.3 Subjects to be covered in equipment specifications. Attention is directed to the following subjects which should be covered in the individual equipment specification or in the contract or order:

(a) Detail characteristics and performance requirements for the equipment.
(b) Whether enclosure is for rotating or nonrotating equipment.

Downloaded from http://www.everyspec.com

(c) Painting of equipment exterior, if gray appearance is required (see 3.2.1).
(d) Eddy current magnetism for equipment installed on nonmagnetic minesweepers (see 3.2.3).
(e) Require an interlock that will cause the interruption of the electrical circuit is an explosionproof enclosure when the cover or door is removed. The interlock (or other circuitry) will prevent automatic reenergizing of the enclosure circuit when the explosionproof integrity of the enclosure is reestablished.
(f) Interface requirements (see 3.2.18).
(g) Salt spray (see 3.2.19).
(h) High impact shock and vibration requirements (see 3.2.19 and MIL-S-901 and MIL-STD-167-1).
(i) Electromagnetic interference requirements of MIL-STD-461 if applicable (see 3.2.19).
(j) Type and color of identification and information plate required (see 3.4).
(k) When dark adaptation is required, the individual equipment specification or purchase document should so specify (see 3.4.5.5).
(l) Drawings (see 3.5).
(m) Quality assurance provisions (see section 4).
(n) Quality inspection system (see 4.4) that should apply, if other than the contractor's standard inspection system.
(o) Examination, tests, and sampling (see 4.4).
(p) Packaging (see section 5).
(q) Ordering data to be specified on Form DD 1423.
(r) Guidance should be included in the individual equipment specification which will assist the contracting activity in the preparation of CDRL (DD Form 1423) and the citing of appropriate DID's (DD Form 1664) as applicable to the particular equipment and type or purchase.

6.4 Requirements applicable unless otherwise specified. Attention is directed to the following requirements which will apply unless specific exception is taken or other requirement is specified in enclosures specifications. Requirements in this category were written for most of the equipment covered by this specification recognizing that for certain equipment or under specific circumstances, changes may be advisable or necessary. Particular consideration should be given to the following subjects when preparing equipment specifications:

(a) Whether totally enclosed enclosure is to be convertible to watertight (see 3.2.15.3).
(b) If air coolers are other than as specified in MIL-C-19836 (see 3.2.16.1).
(c) If the color style of plastic plates is other than style II of MIL-DTL-15024 (see 3.4.4).
(d) Where the explosionproof design evaluation data is to be submitted (see A.4.1.1).

6.5 International interest. Certain provisions of this specification are the subject of international standardization agreement ABCA-NAVY-STD-21A. When amendment, revision, or cancellation of this specification is proposed which will modify the international agreement concerned, NAVSEA will take appropriate action through international standardization channels including departmental standardization offices to change the agreement or make other appropriate accommodations.

6.6 Subject term (key word) listing.

Airtight
Dripproof
Dustproof
Dusttight
Explosionproof
Splashproof
Spraytight

6.7 Changes from previous issue. Marginal notations are not used in this revision to identify changes with respect to the previous issue due to the extensiveness of the changes.

Downloaded from http://www.everyspec.com

EXPLOSIONPROOF ENCLOSURES

A.1 SCOPE

A.1.1 Scope. This appendix covers the construction, testing and design approval procedures for explosionproof enclosures for electrical and electronic equipment intended for use in explosive atmosphers normally found on board Naval ships, most of which are listed in group D of the National Electric Code, and among others include: gasoline, hexane, naptha, benzene, butane, alcohol, benzol, lacquer solvent vapors, or natural gas. This appendix is a mandatory part of this specification. The information contained herein is intended for compliance.

A.2 APPLICABLE DOCUMENTS

A.2.1 Government documents.

A.2.1.1 Specifications, standards, and handbooks. The following specifications, standards, and handbooks form a part of this document to the extent specified herein. Unless otherwise specified, the issues of these documents are those cited in the solicitation or contract.

FEDERAL STANDARD

FED-STD-H28/2 - Screw-Thread Standards for Federal Services, Section 2, Unified Inch Screw Threads – UN and UNR Thread Forms.

MILITARY SPECIFICATION

MIL-DTL-16685 - Packing, Material and Packing Preformed (Stuffing Tube for Electric Cables).

MILITARY STANDARD

MIL-STD-810 - Environmental Test Methods and Engineering Guidelines.

(Copies of these documents are available online at http://quicksearch.dla.mil/ or from the Standardization Document Order Desk, 700 Robbins Avenue, Building 4D, Philadelphia, PA 19111-5094.)

A.2.2 Non-Government publications. The following documents form a part of this document to the extent specified herein. Unless otherwise specified, the issues of documents are those cited in the solicitation or contract.

NATIONAL FIRE PROTECTION ASSOCIATION (NFPA)

NATIONAL ELECTRIC CODE (NEC) – NFPA-70

(Copies of these documents are available online at http://www.nfpa.org or from the National Fire Protection Association, 1 Battery March Park, Quincy, MA 02269-9101.)

NATIONAL ELECTRIC MANUFACTURERS ASSOCIATION (NEMA)

NEMA Standard 250 – Enclosures for Electrical Equipment (1000 Volts Maximum).

(Copies of these documents are available online at http://www.nema.org or from the National Electrical Manufacturer's Association, 1300 North 17th Street, Suite 1847, Rosslyn VA 22209.)

Downloaded from http://www.everyspec.com

A.2.3 Order of precedence. Unless otherwise noted herein or in the contract, in the event of a conflict between the text of this document and the references cited herein (except for related specification sheets), the text of this document take precedence. Nothing in this document, however, supersedes applicable laws and regulations unless a specific exemption has been obtained.

A.3 REQUIREMENTS

A.3.1 Explosionproof design approval. Explosionproof equipment enclosures furnished under this specification shall be of a design that has been approved in accordance with A.4.1. No changes or deviations from the approved design shall be acceptable on production units without specific approval of the contracting activity.

A.3.2 Construction. Enclosures shall be of the totally enclosed type in which no provision is made for ventilation of the interior or relief of pressure from internal explosions.

A.3.2.1 Design strength of enclosure. The enclosure shall be of substantial construction. The recommended minimum thickness of metal for enclosure walls is .25 inch (6.35mm) for enclosures with an internal free volume of 125 cubic inches (2048 cubic cm) or larger, and .1875 inch (4.76mm) for smaller enclosures. Wall thicknesses less than the recommended minimum may be used provided the enclosure is capable of withstanding without rupture or permanent distortion an internal hydrostatic test pressure of four times the maximum internal explosion pressure based upon calculations. For equipment having a wall thickness less than the recommended minimum, information concerning enclosure design strength shall be furnished (see A.4.1.1).

A.3.2.2 Joints in enclosure. Joints shall be of the metal-to-metal plane, cylindrical, stepped, labyrinth, or threaded type (see figures A-1 through A-7). Metal joint surfaces shall be finished to 250 microinches (maximum) (.006mm). Gaskets, O-rings, or other sealing devices may be used if they are of incombustible material, do not interfere with the metal-to-metal fit, and are not included as part of the required joint dimension. Paint, dope, and fillers shall not be used on joints.

A.3.2.2.1 Plane and cylindrical joints. Requirements for dimensions of plane and cylindrical joints are shown on figure A-1, which also illustrates typical joint construction.

A.3.2.2.2 Stepped joints (rabbet joints). Requirements for dimensions of stepped joints are shown on figure A-2, which also illustrates typical joint construction.

A.3.2.2.3 Threaded joints. Threaded joints shall have a minimum of five full threads of engagement or a minimum axial joint width (length of thread engagement measured straight across threads) of .5 inch (12.7mm), whichever is greater. All screw threads shall be class 2 fit in accordance with FED-STD-H28/2. Threaded parts shall be secured against loosening with a supplementary screw or by safety wiring that does not penetrate the joint. A typical threaded joint is illustrated on figure A-3.

A.3.2.2.4 Drive shaft joints. Requirements for dimensions of drive shaft joints are shown on figure A-4 which also illustrates typical joint construction.

A.3.2.2.5 Operating shaft (rod) joints. Operating shafts or push rods passing through the walls of explosionproof enclosures shall be circular in cross-section over that portion which traverses the wall; the hole in the wall shall also be circular. The operating shaft or rod shall have a substantial shoulder, head, or equivalent at the inside to prevent its accidental loss or removal from the outside, or expulsion during explosion. Snap rings, cotter pins, or similar type fasteners are not acceptable as a means of preventing such loss, removal, or expulsion. Requirements for dimensions of operating shaft (rod) joints are shown on figure A-5, which also illustrates typical joint construction. The minimum length specified for the sliding fit shall be maintained in all positions of the shaft (rod).

A.3.2.3 Holes for bolts, screws and rivets. Through holes in explosionproof enclosures shall be kept to a minimum. Holes for bolts, screws, and so forth, shall be “blind” or bottomed if the omission of a bolt or

Downloaded from http://www.everyspec.com

screw would leave an unprotected opening in the enclosure. Location of holes for fasteners shall be in accordance with A.3.3.4. There shall be a free space between the end of the bolt and the bottom of the hole when the bolt is fully screwed home, even if all washers are omitted.

A.3.2.3.1 Screw plugs. For convenience in manufacture, holes may be drilled through enclosure walls, the thickness of which is .1875 inch (4.76mm) or greater, provided these holes are blinded by the insertion of a screw plug of length not less than .25 inch (6.35mm) or the diameter of the hole, whichever is greater. Such plugs shall be securely welded or riveted. This procedure shall not be permitted where the thickness of the enclosure wall is less than .1875 inch (4.76mm) (see figure A-6).

A.3.2.3.2 Bolt holes. Holes may be made through walls for bolts that are necessary to hold essential parts, such as field poles, the omission of which would make the equipment inoperative, provided the following conditions are met:

(a) Bolts shall have a close fit through the wall in accordance with figures A-6 and A-7.
(b) At least two bolts shall be used for each part held.
(c) Each hole shall be bottomed in the part held and adequate metal contact provided between the part and the wall to insure an effective internal seat around the hole if the bolt is omitted (see figures A-6 and A-7).

A.3.2.3.3 Screw holes. Holes shall not be drilled through enclosure walls for screws holding identification, information, or warning plates.

A.3.2.4 Inspection and service access openings. Openings shall be limited to the minimum number required for proper assembly, inspection, and servicing of equipment. All inspection and access covers and doors shall have metal-to-metal plane, stepped, or threaded joints. Glass covered inspection openings shall not be permitted.

A.3.2.5 Auxiliary openings. No breathers, drains or pressure-relief devices to relieve pressure due to gas explosion within the enclosure shall be permitted for explosionproof enclosures.

A.3.2.6 Welding. Tack welding may be used to secure threaded plugs or press fitted parts. Other welding shall be continuous and free from pin holes.

A.3.3 Fastening devices. Fastening devices (bolts, screws, nuts, studs, and washers) shall be in accordance with MIL-E-917. Bolts and screw heads shall be of the following styles: hexagon-head, socket-head, 12-point collar. Bolts, screws, and nuts used at different locations shall, if practical, be of identical design. Threaded fasteners shall be secured by lockwashers.

A.3.3.1 Thread engagement. The length of the thread engagement shall be not less than the major diameter (nominal) of the thread of that diameter needed to meet the explosion and hydrostatic tests conducted on the enclosure, whichever is greater.

A.3.3.2 Diameter of fasteners. Diameter of fasteners shall be in accordance with table I.

TABLE A-I. Fastener diameter.

Size of enclosure internal free volume (in^3)	Minimum fastener diameter inches (mm)	
	To secure parts subject to stress due to internal explosion	To secure nonstressed parts (bearing inner caps and similar parts)
60 or smaller (983cc)	.25 (6.35)	.1875 (4.76)
Unrestricted	.3125 (7.94)	.25 (6.35)

A.3.3.3 Number of fasteners. A minimum of four fasteners shall be used for each joint.

Downloaded from http://www.everyspec.com

A.3.3.4 Location of fasteners. Fasteners in the required width of the joint shall be so located as to conform to the requirements of (a) through (e). Figures A-6 and A-7 illustrate typical fastener locations.

(a) The distance between fasteners for plane joints shall not exceed 6 inches (152mm), measured along the shortest path within the joint gap. Greater spacings may be used for stepped joints upon approval of the contracting activity.
(b) The shortest distance from the inside of the enclosure to the edge of the fastener clearance hole shall be as shown on figures A-6 and A-7.
(c) If the bolt hole is to be considered part of the flame path (joint) the diametrical clearance between the fastener and fastener clearance hole shall be as shown on figure A-7.
(d) A minimum thickness of metal between bottom of tapped hole in joint width and inside of enclosure shall be 0.125 inch or 1/3 of the hole diameter, whichever is greater (see figures A-6 and A-7). Tapped holes for studs may be drilled through to the inside of the enclosure and are secured in place by peening, staking, tack welding, or equivalent means.
(e) Interpoles fastened to the motor frame by bolts (or studs) may have a distance from edge of pole piece to the bolt hole in the motor as shown on figure A-7.

A.3.4 Press-fitted parts. A metal pin or part press-fitted through the enclosure shall engage for a distance of at least .375 inch (9.53mm) and be adequately secured against removal by riveting, peening, tack welding, or equivalent.

A.3.5 External fans. External fans on explosionproof fan-cooled motors shall be of nonsparking material such as brass, or aluminum, or plastic (when specifically approved by the contracting activity) and shall be securely mounted. Substantial fan guards or shields shall be provided.

A.3.6 Provision for connection to electrical power source.

A.3.6.1 Rotating equipment.

A.3.6.1.1 Permanently mounted (nonportable) equipment. A terminal box shall be provided. The terminal box, cover, and attachment to equipment enclosure shall be of explosionproof construction in accordance with this appendix, except that plane joints .75 inch (19.05mm) in width with a joint clearance of 0.002 inch may be used for the cover of terminal boxes with an internal free volume of 45 in^3 (737cc) or less.

A.3.6.1.1.1 Passage between motor (or similar machine) and terminal box. Leads or conductors shall be securely held where they pass into the motor. The passage between the motor and terminal box shall be filled by one of the means listed below. Typical construction is shown on figure A-8.

(a) If a tube or blocked passage is provided. The length of the blocked passage and the clearance around the leads shall be satisfactory to the contracting activity. There shall be no sharp edges where the leads pass through the clearance openings. Detail drawings shall show the minimum permissible length of tube with the maximum permissible clearance around leads.
(b) Sealing compound. The design of the opening and characteristics of the sealing compound shall be such as to hold the sealing compound securely in place. The compound shall be compatible with the leads passing through it and shall not soften or crack under normal service conditions. The sealing compound shall have a minimum depth of .625 inch (15.88) with increase as a function of the internal length of joint in inches. When reinforced by metal the seal depth may be reduced by .25 inch (6.35mm) provided that a .625 inch (15.88) minimum depth remains. The sealing compound shall not loosen or crack during explosion tests.

A.3.6.1.2 Portable equipment. Electrical power cable (or cord) assemblies and electrical assemblies for electronic equipment shall be as required by the equipment specification. The cable shall enter the equipment through a properly packed Navy standard terminal tube. Packing (conforming to MIL-P-16685 or equivalent) shall be used and the length of packing along the cable when compressed by the gland nut shall be at least .625 inch (15.88). The terminal tube shall be long enough to provide for this feature.

Downloaded from http://www.everyspec.com

Clearance shall exist between the gland nut flange and the tube when the packing is fully compressed. The radial clearance between the cable and the tube shall be not greater than .03125 inch (.7938mm).

A.3.6.2 Nonrotating equipment. Provisions for cable entrance shall be in accordance with the equipment specification. If cable entrance requirements are not specified, space shall be provided at suitable locations on the top and bottom of the enclosure for installation of Navy standard terminal tubes.

A.3.7 Bearing housing construction of rotating equipment. The following are applicable to bearing housing of rotating equipment:

(a) Ball or roller bearings are not considered as forming any part of the flame path.
(b) Grease drains shall be outside the bearings.
(c) A removable outer bearing cap is not considered part of the required length of fit unless the cap is essential to hold the bearing in place.

A.3.8 Identification plates. In addition to the information required for identification of the equipment, identification plates shall state “Explosionproof, Group D. For use in gasoline vapors and similar atmospheres. CAUTION: During repair, do not deform, damage, or paint mating surfaces of enclosure parts. All enclosure parts should fit tightly using all fasteners provided.”

A.3.9 Warning plates for electrical control equipment. Explosionproof control equipment shall be provided with a readily legible, nontarnishing warning plate, reading as follows:

“WARNING: EXPLOSIVE VAPORS PRESENT. DISCONNECT SUPPLY CURRENT BEFORE OPENING COVER; DO NOT ENERGIZE UNLESS THE EQUIPMENT IS FULLY ASSEMBLED AND ALL OPENINGS IN THE ENCLOSURE ARE PROPERLY CLOSED.”

A.3.10 Drawing information. Equipment drawings covering explosionproof enclosures, in addition to the equipment specification requirements (see 6.2.2), shall include the following:

(a) Identification of equipment as “explosionproof”.
(b) Cross-sectional view of all explosionproof joints. Methods of assembly around explosionproof joints shall also be illustrated.
(c) Finish dimensional details with tolerances and clearance of each metal-to-metal joint.
(d) Detail of identification plate.
(e) The internal free volume of the enclosure.
(f) The total internal volume of the enclosure when empty.
(g) Record of the NAVSEA Investigation, including:
  (1) Report number and date.
  (2) Navy approval activity, file number, and date of approval letter.
(h) Weight.
(i) Drawings used for manufacturing purposes shall carry the notation “DO NOT DRILL THROUGH” where applicable to bolt holes.
(j) Class and type.

Downloaded from http://www.everyspec.com

A.4 QUALITY ASSURANCE PROVISIONS

A.4.1 Explosionproof design approval procedures. Each design of explosionproof equipment offered under this specification requires approval by the procedures described herein. Explosionproof design approval shall be obtained prior to the delivery of equipment of any new or modified design. Once the design is approved as being explosionproof, identical equipment may be supplied on subsequent contracts or orders without further explosionproof design approval.

A.4.1.1 Procedures for design approval based on testing. If explosionproof design approval based on testing is sought, the following procedures shall apply:

(a) Application for explosionproof design approval shall be submitted by the equipment manufacturer to the Navy contracting activity for forwarding for approval to the command or activity responsible for establishing technical requirements. (NAVSEA, Washington, DC 20362-5101 shall be the approval activity for Naval shipboard electrical equipment.) The following information shall be furnished with the application:
  (1) Name of Government contracting activity and contract number.
  (2) Name of prime contractor, prime contractor's purchase order number, and identification of equipment being supplied by prime contractor.
  (3) Two prints of all drawings for the explosionproof equipment.
  (4) Statement by applicant that the equipment is constructed in accordance with MIL-DTL-2036.
  (5) If any wall thickness is less than the recommended minimum (see A.3.2.1), the explosion pressure that enclosure is designed to withstand, safety factors applied, and method of determining enclosure strength (including design strength calculations or hydrostatic test results) shall be specified.
  (6) Explosionproof testing activity.
  (7) Explosionproof test method (reference to a recognized explosionproof test method, that is method 511, procedure II, of MIL-STD-810, or applicable design tests for enclosures specified in NEMA 250).
  (8) Two copies of explosionproof test report.
(b) One copy of explosionproof test report shall be submitted to the NAVSEA for information, with a cover letter including the information specified in A.4.1.1(a) (1) through approval activity shall also be furnished. The applicant shall be responsible for all arrangements for testing and all testing expenses.
(c) The Navy approval activity will approve or disapprove the design as explosionproof in a letter to the applicant via the Navy contracting activity.

A.4.2 Explosionproof tests. Tests for explosionproofness shall be conducted using an approved test method after the applicant has certified that all other equipment tests (including shock and vibration tests) have been completed. Equipment shall not be repaired during the interval between shock tests and explosionproof tests.

A.4.3 Hydrostatic test. When the hydrostatic test is required (see A.3.2.1), the pressure shall be applied at a rate of 100 pounds force feet per square inch (lbf/in^2) until the required internal pressure is reached and it shall be held to this pressure for 1 minute.

A.4.4 Reconditioning of test sample. If equipment which has satisfactorily passed these tests is to be applied on a contract or order, the manufacturer shall repair all the tapped openings which were required for test purposes and clean the inside of the enclosures as necessary. This reconditioning shall be accomplished before the equipment is offered for final inspection. Acceptable methods of plugging the test openings are as follows:

(a) Using a solid threaded plug, insert plug with a minimum of either full thread engagement for the thickness of the enclosure material or five full threads.
(b) Secure plug against loosening by:
  (1) Tack welding.

Downloaded from http://www.everyspec.com

(2) Staking on inside or outside of enclosure.
(3) Shrink-fit by installing chilled plug.
Remove wrenching means when methods (2) and (3) are used.

A.5 PACKAGING

A.5.1 Packaging. The packaging requirements shall be as specified in MIL-DTL-2036.

A.6 NOTES

A.6.1 For applicable information see MIL-DTL-2036.

A.6.2 Definitions. The definitions specified in A.6.2.1 through A.6.2.10 shall apply.

A.6.2.1 Explosionproof enclosure. Explosionproof enclosures are as defined in MIL-STD-108.

A.6.2.2 Joint. A joint is defined as the juncture where corresponding surfaces of the enclosure meet and form flame arresting paths from the inside to the outside of the enclosure. The close clearance in drive shaft and operating shaft penetrations of the enclosure also constitutes a joint.

A.6.2.3 Cylindrical joint. A cylindrical joint is formed by two adjoining cylindrical surfaces (see figure A-1).

A.6.2.4 Labyrinth joint. A labyrinth joint is one having at least two axial paths either in series or parallel, interrupted by at least one radial path with a minimum length of .125 inch (3.18mm). For example, labyrinth joints are commonly used for drive shaft penetrations of the enclosure (see figure A-4).

A.6.2.5 Plane joint. A plane joint is formed by two adjoining flat surfaces in parallel planes (see figure A-1).

A.6.2.6 Stepped joint (sometimes referred to as a rabbet joint). A stepped joint is comprised of two adjoining surfaces with a change in direction between its inner and outer edges. A stepped joint may be composed of a cylindrical portion and a plane portion of two or more plane portions (see figure A-2).

A.6.2.7 Threaded joint. A threaded joint is formed between the adjoining surfaces of male and female threaded members, both of which are of the same type and gauge (see figure A-3).

A.6.2.8 Width of joint. The width of joint shall consist of shortest distance from the inside to the outside of the enclosure through the joint (see figure A-4).

A.6.2.9 Clearance or gap. The clearance shall be defined as the space between corresponding surfaces at a joint measured normal to the surface. For cylindrical surfaces, either the radial clearance (actual clearance between surfaces) or diametrical clearance (difference between the two diameters) may be specified (see figure A-1 through A-7).

A.6.2.10 Internal free volume. The internal free volume is defined as the unoccupied space (air volume) within the enclosure.

Downloaded from http://www.everyspec.com

TYPICAL PLANE JOINT CONSTRUCTION

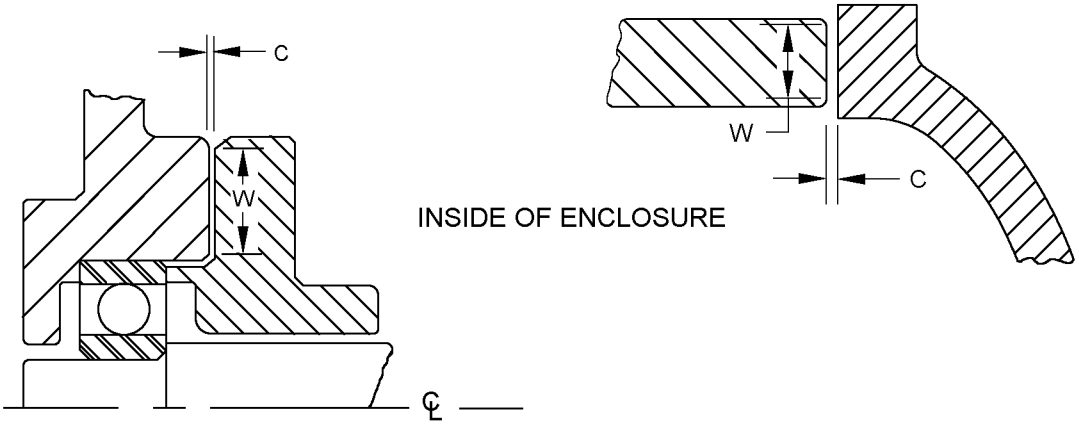

TYPICAL CYLINDRICAL JOINT CONSTRUCTION

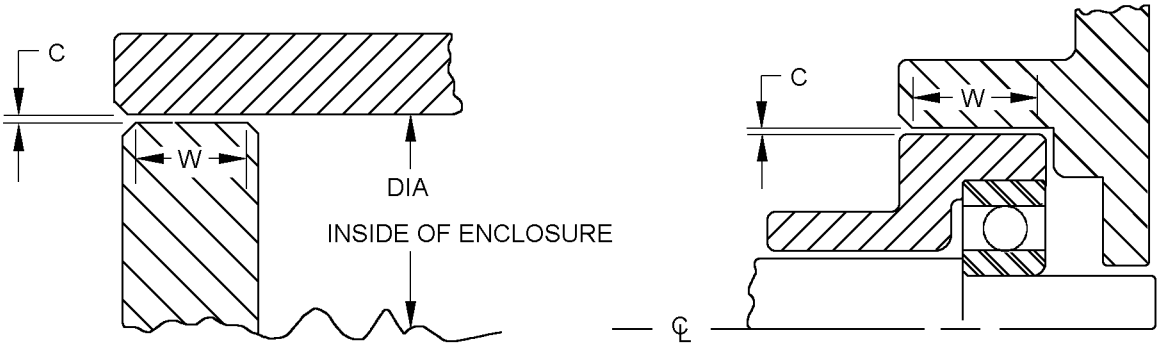

W - JOINT WIDTH

C - JOINT CLEARANCE

NOTE: CHAMBERS ARE NOT PART OF JOINT WIDTH

DIMENSIONS FOR PLANE AND CYLINDRICAL JOINTS

SIZE OF ENCLOSURE INTERNAL FREE VOLUME, IN^3	DIMENSIONS OF JOINT-INCHES (mm)		"C" MAXIMUM JOINT CLEARANCE (RADIAL FOR CYLINDRICAL JOINTS)
	"W" MINIMUM WIDTH OF JOINT	"C" MAXIMUM JOINT CLEARANCE (DIAMETRICAL FOR CYLINDRICAL JOINTS)	
SMALLER THAN 125	.75 (19.05)	.003 (.0762)	.0015 (.0381)
UNRESTRICTED	1 (2.54) 1.25 (31.75)	.003 (.0762) .004 (.1016)	.0015 (.0381) .0020 (.0508)

SH 9248

FIGURE A-1. Plane and cylindrical joints.

Downloaded from http://www.everyspec.com

TYPICAL STEPPED JOINT CONSTRUCTION (RABBET JOINT)

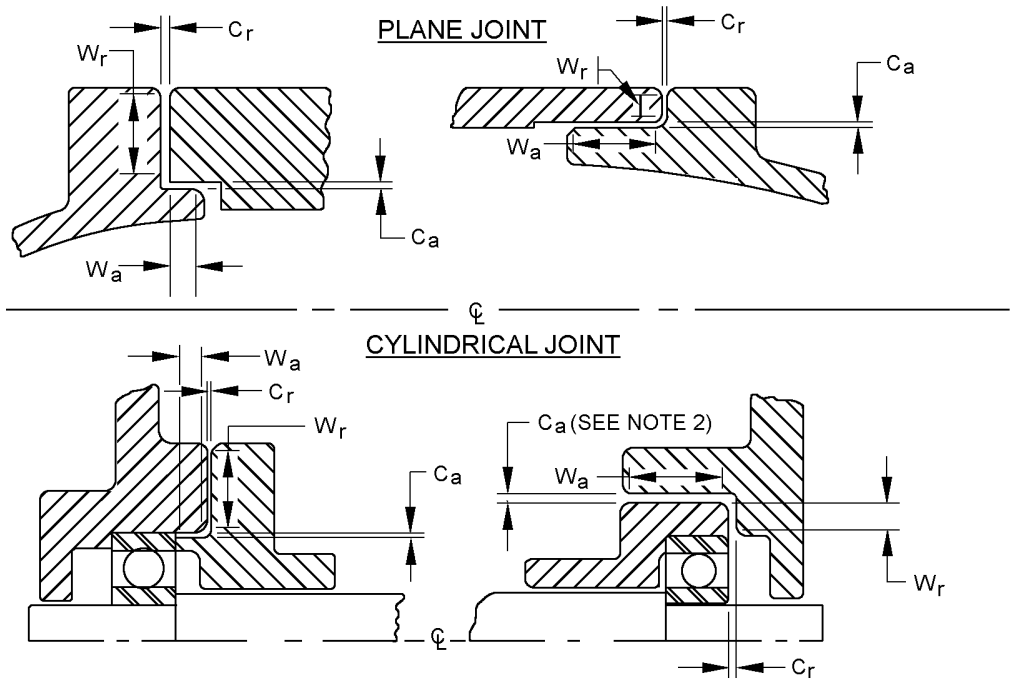

W_r - RADIAL JOINT WIDTH C_r - RADIAL JOINT CLEARANCE
W_a - AXIAL JOINT WIDTH C_a - AXIAL JOINT CLEARANCE (SEE NOTE 2)

NOTES: (1) CHAMFERS ARE NOT PART OF THE JOINT WIDTH
(2) C_o MAY BE SPECIFIED AS EITHER RADIAL OR DIAMETRICAL CLEARANCE.

DIMENSIONS FOR STEPPED JOINTS

SIZE OF ENCLOSURE INTERNAL FREE VOLUME – IN^3	DIMENSIONS OF JOINT – INCHES (mm)			
	MINIMUM TOTAL WIDTH OF STEPPED JOINT W_T+W_O	MINIMUM WIDTH OF RADIAL CLAMPED JOINT W_T	MAXIMUM CLEARANCE OF RADIAL SECTION OF JOINT C_r	MAXIMUM DIAMETRICAL CLEARANCE OF AXIAL SECTION C_O
LESS THAN 125 MOTORS ONLY	.5 (12.7) .5 (12.7)	.046875 (1.190625) .09375 (2.38125)	.0015 (.0381) .002 (.0508)	.003 (.0762) .004 (.1016)
LESS THAN 125	.625 (15.875) .625 (15.875)	.125 (3.175) .25 (6.35)	.003 (.0762) .003 (.0762)	.004 (.1016) .008 (.2032)
UNRESTRICTED	.75 (19.05) .75 (19.05) 1 (2.54) 1 (2.54)	.125 (3.175) .25 (6.35) .125 (3.175) .25 (6.35)	.003 (.0762) .003 (.0762) .004 (.1016) .004 (.1016)	.004 (.1016) .008 (.2032) .004 (.1016) .008 (.2032)

SH 9249

FIGURE A-2. Stepped joints.

Downloaded from http://www.everyspec.com

TYPICAL THREADED JOINT

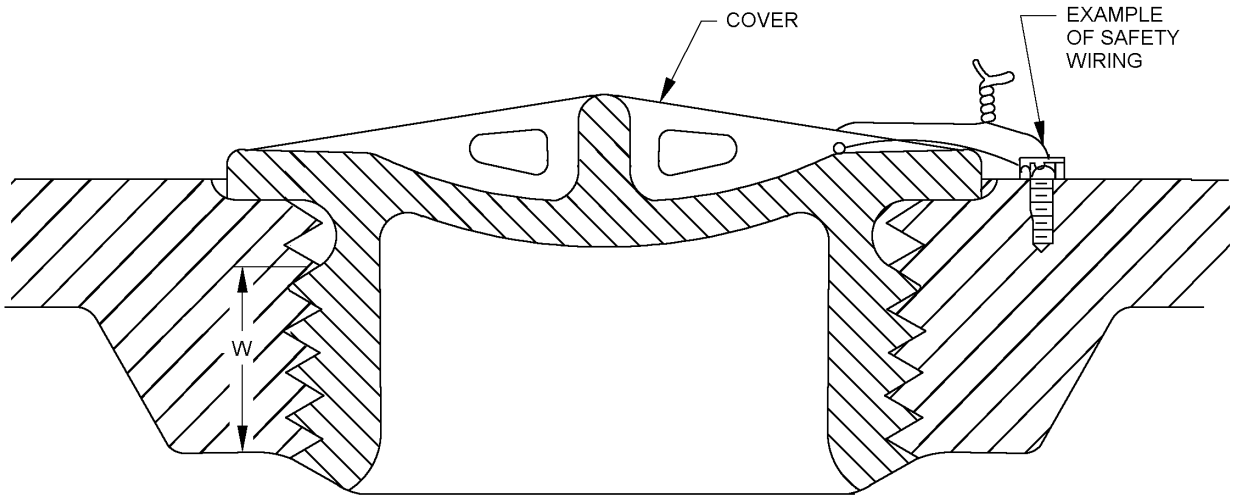

W-MINIMUM 5 FULL THREADS OF ENGAGEMENT OR A
OF AXIAL JOINT OF .5 INCH, WHICHEVER IS GREATER.

THREADS SHALL BE CLASS 2 FIT

SH 9250

FIGURE A-3. Threaded joint.

Inches	Inches	mm
1/32	.03125	0.79375
3/64	.046875	1.190625
3/32	.09375	2.38125
1/8	.125	3.175
1/4	.25	6.35
7/16	.4375	11.1125
1/2	.5	12.7
5/8	.625	15.875
3/4	.75	19.05

Inches	Inches	mm
1	1.0	2.54
1 1/4	1.25	31.75
	.0015	0.0381
	.0016	0.0406
	.0020	0.0508
	.003	0.0762
	.004	0.1016
	.005	0.127
	.007	0.177

Inches	mm
.008	0.2032
.010	0.254
.012	0.3048
.015	0.381
.030	0.762
.031	0.7874
.125	3.175
.438	11.1252
.5	12.7

Downloaded from http://www.everyspec.com

TYPICAL DRIVE SHAFT PENETRATIONS

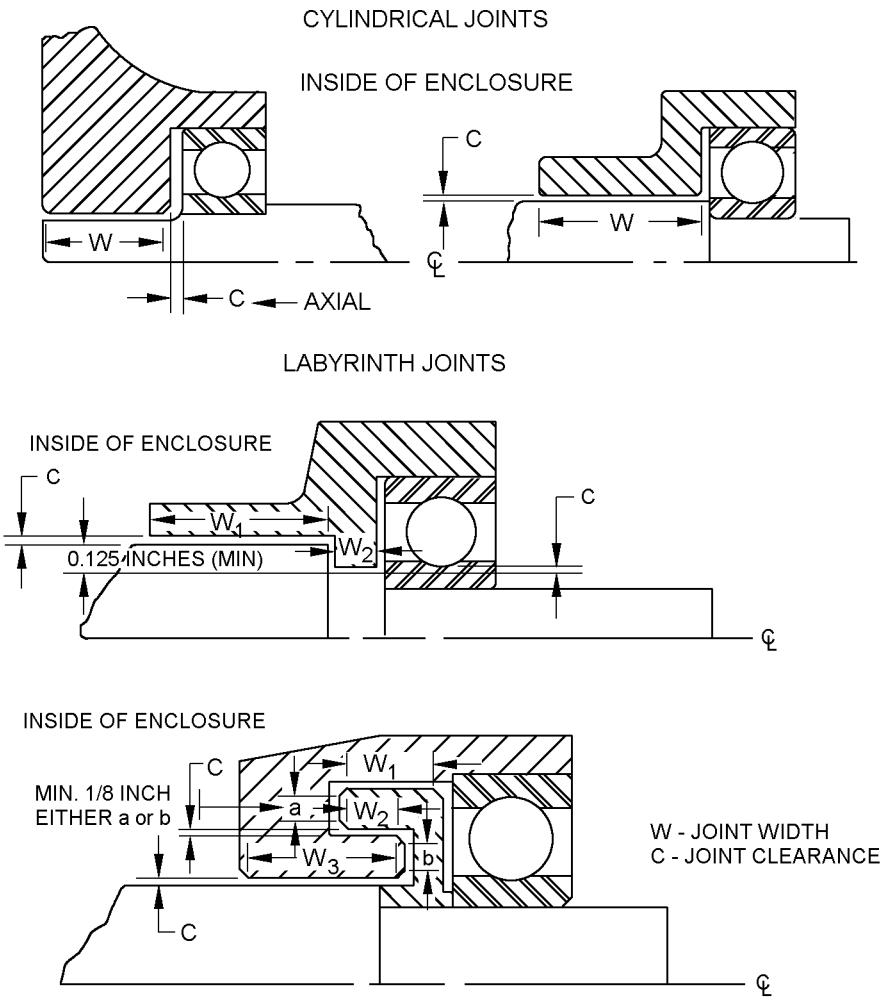

NOTE: CHAMFERS ARE NOT PART OF JOINT WIDTH

DIMENSIONS FOR DRIVE SHAFT JOINTS

SIZE OF ENCLOSURE INTERNAL FREE VOLUME, IN^3	DIMENSIONS – INCHES		
	MINIMUM WIDTH OF JOINT W W_1+W_2 $W_1+W_2+W_3$	"C" MAXIMUM RADIAL CLEARANCE	
		SLEEVE BEARINGS	BALL AND ROLLER BEARINGS
SMALLER THAN 125	.75 (19.05)	.004 (.1016)	.010 (.254)
UNRESTRICTED	1 (2.54) 1.5 (38.1)	.005 (.127) .007 (.177)	.010 (.254) .012 (.3048)

SH 9251

FIGURE A-4. Drive shaft joints.

Downloaded from http://www.everyspec.com

TYPICAL OPERATING SHAFT (ROD) PENETRATION

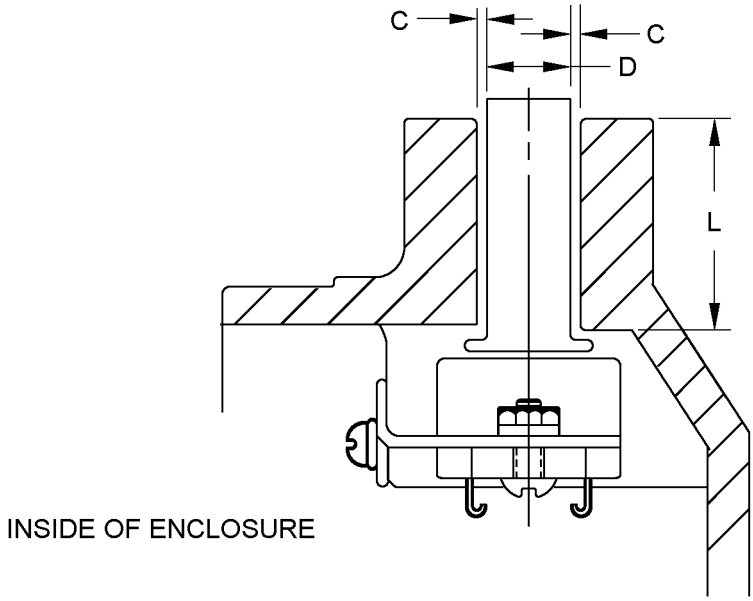

INSIDE OF ENCLOSURE

L – LENGTH OF OPENING
C – CLEARANCE, RADIAL
D – DIAMETER OF ROD
NOTES: (1) FULL LENGTH OF ROD SHALL BE OCCUPIED BY ROD REGARDLESS OF ROD POSITION
(2) SHOULDER OR OTHER MEANS SHALL BE PROVIDED TO PREVENT REMOVING ROD FROM OUTSIDE OF ENCLOSURE

DIMENSIONS FOR OPERATING ROD JOINTS

SIZE OF ENCLOSURE INTERNAL FREE VOLUME, IN^3	DIMENSIONS – INCHES (mm)		
	"D" MINIMUM ROD DIAMETER	MINIMUM LENGTH OF OPENING, "L"	"C" MAXIMUM RADIAL CLEARANCE
SMALLER THAN 125	.25 (6.35)	.75 (19.05)	.004 (.1016)
UNRESTRICTED	.25 (6.35)	1 (2.54)	.005 (.127)

SH 9252

FIGURE A-5. Operating shaft (rod) joint.

Downloaded from http://www.everyspec.com

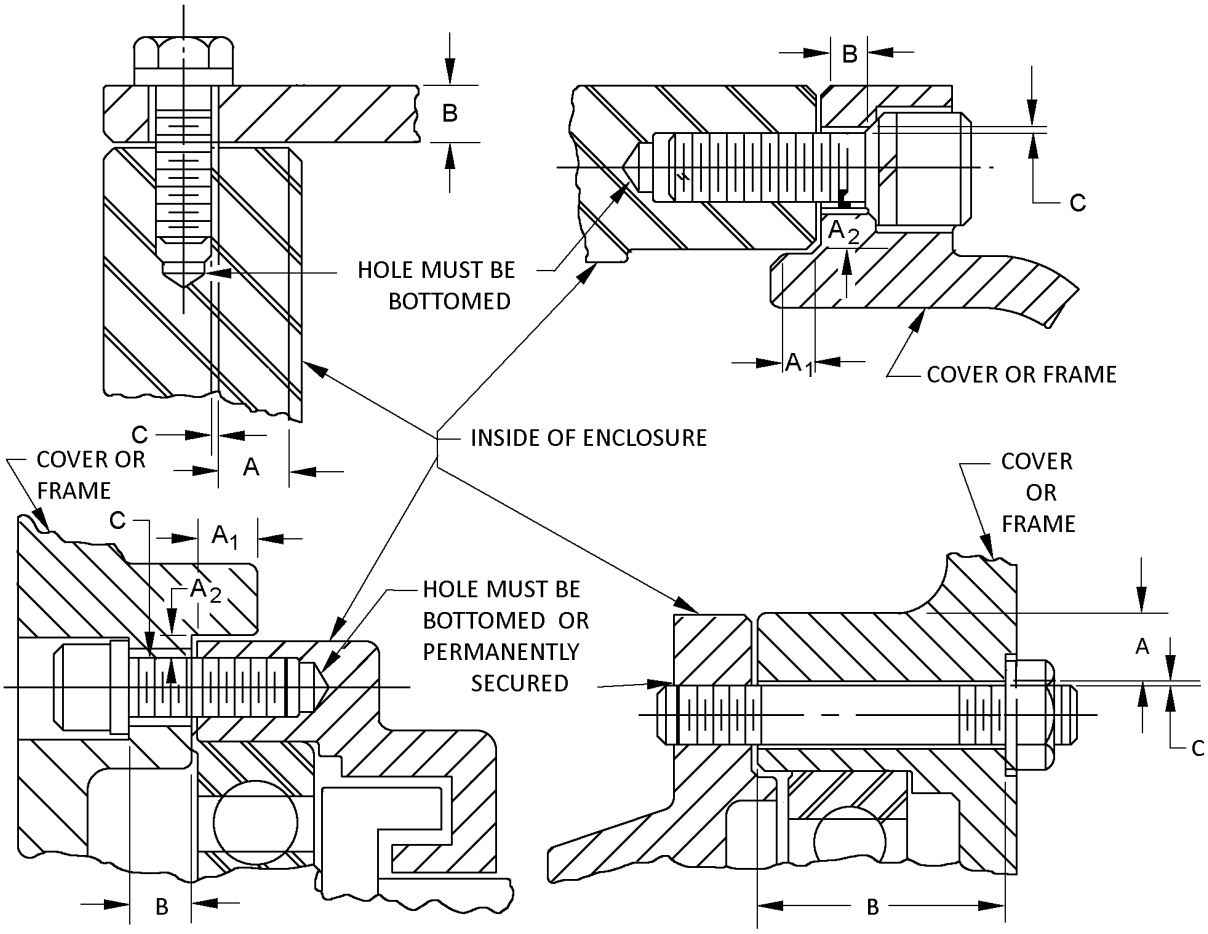

A – .4375 INCH (11.1125mm) MINIMUM, NOT INCLUDING CHAMFER AND "C" DIM. ($A=A_1+A_2$)
B – MINIUM DIMENSION EQUAL TO MINIMUM WIDTH OF A PLANE JOINT (SEE FIG. 1) MINUS ACTUAL DIMENSION 1).
C – .03125 INCH (.79375mm) MAXIMUM DIAMETRICAL CLEARANCE.

NOTES: (1) CHAMFERS ARE NOT PART OF JOINT WIDTH.
(2) THE JOINT WIDTHS AND CLEARANCES SPECIFIED IN FIGURES A-1 AND A-2 ARE APPLICABLE.
(3) FREE SPACE AT BOTTOM OF BOLT HOLE SHALL PERMIT BOLT TO BE SCREWED HOME IF LOCKWASHER IS OMITTED.

SH 9253

FIGURE A-6. Typical fastener locations in plane and stepped joints.

Downloaded from http://www.everyspec.com

PLANE JOINTS

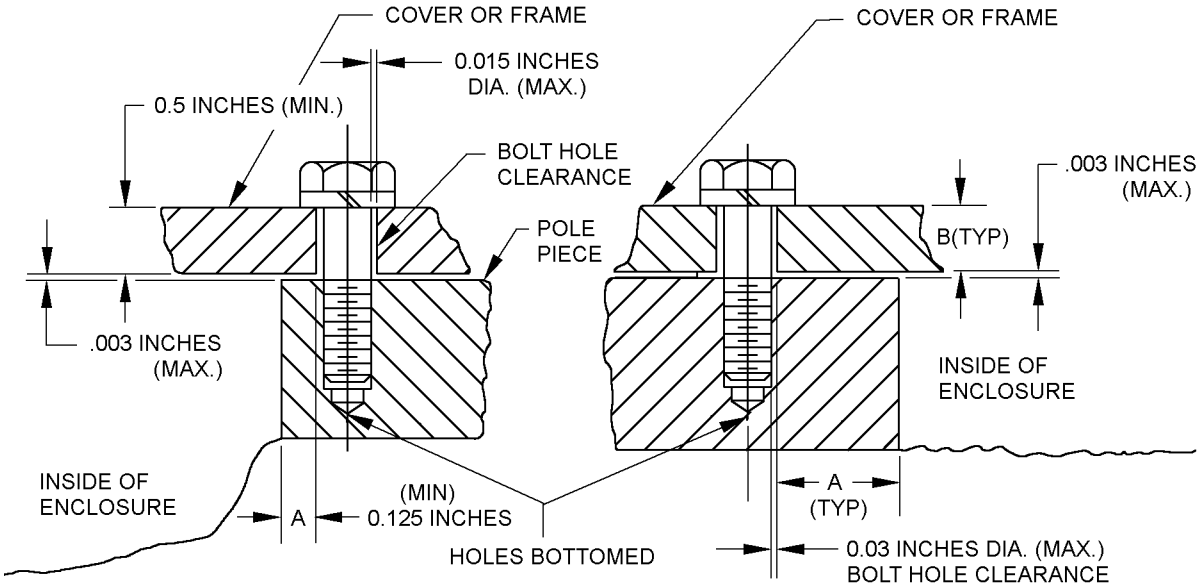

WHEN BOLT HOLE CLEARANCE IS 0.016 INCHES (.0406mm) DIA. OR LESS; “A” DIM. SHALL BE 0.125 INCHES (3.175mm) MIN. AND “B” DIM. SHALL BE 0.5 INCHES (12.7mm) MIN.

WHEN BOLT HOLE CLEARANCE IS 0.031 INCHES (.7874mm) DIA. OR LESS; “A” DIM. SHALL BE 0.438 INCHES (11.1252mm) MIN. AND “B” DIM. SHALL BE (1) INCH (2.54mm) MIN. MINUS ACTUAL “A” DIM.

SH 9254

FIGURE A-7. Typical construction and fastener location for main pole and interpole joints.

Downloaded from http://www.everyspec.com

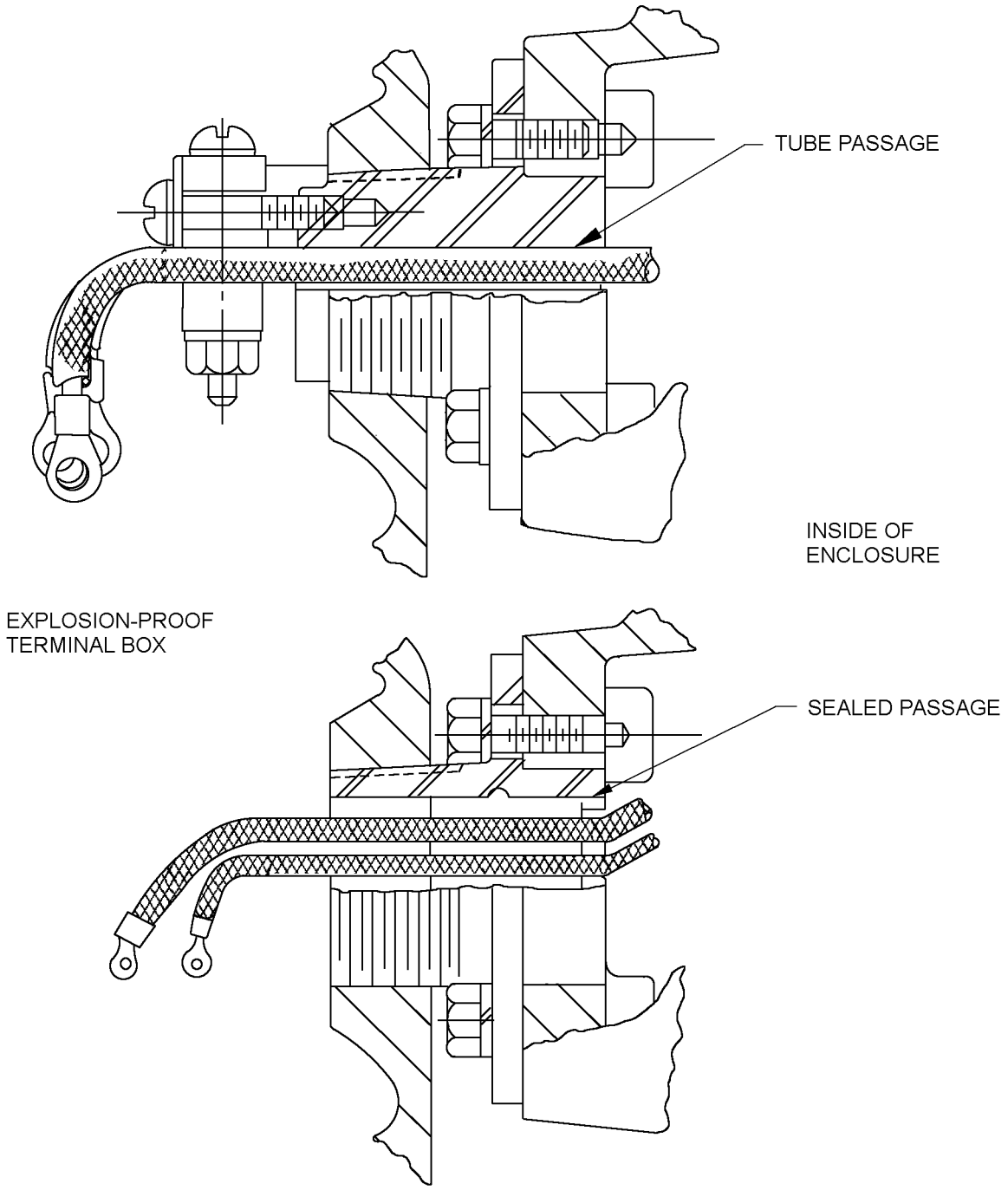

SH 9235

FIGURE A-8. Typical construction of passage between terminal and terminal box.

Downloaded from http://www.everyspec.com

CONCLUDING MATERIAL

Custodians:
Army – CR
Navy – SH

Preparing activity:
DLA - CC

(Project 5935-2013-016)

Review activities:
Army – CR4

NOTE: The activities listed above were interested in this document as of the date of this document. Since organizations and responsibilities can change, you should verify the currency of the information above using the ASSIST Online database at https://assist.dla.mil.