Downloaded from http://www.everyspec.com

INCH-POUND
MIL-DTL-20078D
10 September 2004
SUPERSEDING
MIL-G-20078C
7 July 1983

DETAIL SPECIFICATION

GASKET, FOR BALLISTIC DOORS AND HATCHES

This specification is approved for use by all Departments and Agencies of the Department of Defense.

1. SCOPE

1.1 Scope. This specification establishes the requirements for metal inserted rubber gaskets and two-line rubber gaskets for ballistic doors and hatches (see 6.1).

1.2 Classification. The gaskets are of the following types, as specified (see 6.2).

Type A-1 - Metal inserted; straight section.
Type A-2 - Metal inserted; corner section.
Type B - Two-line rubber.

1.3 Part or identifying number (PIN). PINs to be used for gaskets or gasket material acquired to this specification are created as follows:

```
M        20078   A-1      1.25
|        |       |        |
|        |       |        Size
|        |       Type
|        Specification number
Denotes item defined by inch-pound units
```

2. APPLICABLE DOCUMENTS

Comments, suggestions, or questions on this document should be addressed to Commander, Naval Sea Systems Command, ATTN: SEA 05Q, 1333 Isaac Hull Avenue, SE, Stop 5160, Washington Navy Yard DC 20376-5160 or emailed to commandstandards@navsea.navy.mil, with the subject line "Document Comment". Since contact information can change, you may want to verify the currency of this address information using the ASSIST Online database at www.dodssp.daps.mil

AMSC N/A FSC 5330

Downloaded from http://www.everyspec.com

2.1 General. The documents listed in this section are specified in sections 3, 4, or 5 of this specification. This section does not include documents cited in other sections of this specification or recommended for additional information or as examples. While every effort has been made to ensure the completeness of this list, document users are cautioned that they must meet all specified requirements of documents cited in sections 3, 4, or 5 of this specification, whether or not they are listed.

2.2 Government documents.

2.2.1 Specifications, standards and handbooks. The following specifications, standards, and handbooks form a part of this document to the extent specified herein. Unless otherwise specified, the issues of these documents are those cited in the solicitation or contract.

DEPARTMENT OF DEFENSE SPECIFICATIONS

MIL-PRF-900 - Rubber Gasket Material, 45 Durometer Hardness.

DEPARTMENT OF DEFENSE STANDARDS

MIL-STD-289 - Visual Inspection Guide for Rubber Sheet Material.

FEDERAL STANDARDS

FED-STD-601 - Rubber: Sampling and Testing

(Copies of these documents are available online at http://assist.daps.dla.mil/quicksearch or www.dodssp.daps.mil or from the Standardization Document Order Desk, 700 Robbins Avenue, Building 4D, Philadelphia, PA 19111-5094.)

2.2.2 Other Government documents, drawings, and publications. The following other Government documents, drawings, and publications form a part of this document to the extent specified herein. Unless otherwise specified, the issues of these documents are those cited in the solicitation or contract.

BUREAU OF MEDICINE AND SURGERY (BUMED)

BUMED INST 6270.8 - Procedures for Obtaining Health Hazard Assessments Pertaining to Operational Use of a Hazardous Material.

(Copies of this document are available online at https://bumed.med.navy.mil or from Bureau of Medicine and Surgery, Department of the Navy, 2300 E Street, NW, Washington, DC 20372-5300.)

2.3 Non-Government publications. The following documents form a part of this document to the extent specified herein. Unless otherwise specified, the issues of these documents are those cited in the solicitation or contract.

AMERICAN SOCIETY FOR QUALITY (ASQ)

ASQC Z1.4 - Sampling Procedures and Tables for Inspection by Attributes. (DoD adopted)

(Copies of this document are available from www.asq.org or American Society for Quality, 600 North Plankinton Avenue, Milwaukee, WI 53203.)

Downloaded from http://www.everyspec.com

ASTM INTERNATIONAL

D 429 - Standard Test Methods for Rubber Property - Adhesion to Rigid Substrates. (DoD adopted)
D 2240 - Standard Test Method for Rubber Property - Durometer Hardness. (DoD adopted)

(Copies of these documents are available from www.astm.org or ASTM International, 100 Barr Harbor Drive, PO Box C700, West Conshohocken, PA 19428-2959.)

2.4 Order of precedence. In the event of a conflict between the text of this document and the references cited herein, the text of this document takes precedence. Nothing in this document, however, supersedes applicable laws and regulations unless a specific exemption has been obtained.

3. REQUIREMENTS

3.1 First article. When specified (see 6.2), a sample shall be subjected to first article inspection in accordance with 4.2.

3.2 Material. The material shall be as specified hereinafter.

3.2.1 Rubber. Rubber shall be in accordance with MIL-PRF-900 and shall be suitable for vulcanizing to steel strip (see 4.4). The hardness shall be 45 plus or minus (±) 5 durometer units (see 4.4.2).

3.2.2 Metal strip. The imbedded metal strip shall be 3/64 by 1 inch hot rolled commercial quality steel strip, plated as necessary to secure adequate adhesion to rubber.

3.2.3 Adhesion (types A-1 and A-2). The adhesion of the rubber to the steel shall be such that the steel will bend or the rubber will tear before the rubber can be separated from the steel. It shall not be possible to strip the rubber cleanly from the steel without the use of solvent when tested as specified in 4.4.3.

3.2.4. Sealing pressure. The sealing pressure of the rubber shall be 95 pounds per square inch (lb/in^2) when tested in accordance with 4.4.4.

3.2.5 Recycled, recovered, or environmentally preferable materials. Recycled, recovered, or environmentally preferable materials should be used to the maximum extent possible provided that the material meets or exceeds the operational and maintenance requirements, and promotes economically advantageous life cycle costs.

3.3 Design and construction.

3.3.1 Type A-1 straight section. Straight sections shall conform to Figure 1.

3.3.1.1 At 5-inch intervals along the center of the strip and in the center of the 1/2-inch diameter recesses in the gasket, there shall be 1/4-inch diameter holes, countersunk for American National Standard No. 10 countersunk head machine screws as shown on Figure 1.

3.3.1.2 Tolerances. The spacing of the holes in the metal strip shall be such that the distance between any two centers in a strip shall not vary from a multiple of 5 inches by more than ± 1/64 inch. A tolerance of ± 1/4 inch in length will be permitted. Tolerances in width and thickness will be permitted as follows:

Width: plus 1/16 inch, minus 0.0 inch.
Thickness (total): plus 1/16 inch, minus 0.0 inch.
Thickness from un-grooved surface of rubber to metal strip: ± 1/2 inch.

Downloaded from http://www.everyspec.com

3.3.2 Type A-2, corner section. Corner sections shall conform to Figure 2.

3.3.2.1 Tolerances. A tolerance of ± 1/64 inch shall be permitted in the 6-5/16-inch dimensions, measured to the centers of the end holes in the metal strip. A tolerance of ± 1/16 inch in the throat radius will be permitted. Tolerances in width and thickness shall be as follows:

Width: plus 1/16 inch, minus 0.0 inch.
Thickness (total): plus 1/16 inch, minus 0.0 inch.
Thickness from ungrooved surface of rubber to metal strip: ± 1/32 inch.

3.3.3 Type B, two-line rubber. Type B shall be molded to the size shown on Figure 3.

3.3.3.1 Tolerances. Tolerances shall be as shown on Figure 3.

3.4 Workmanship. Rubber and metal shall be free from defects that might affect their serviceability; adhesion of rubber to metal shall be uniform throughout contacting surfaces; metal strips shall be centered; the ungrooved surface of gaskets shall be free from pits, indentations, projections, or bubbles. Pits or indentations on the corrugated surface shall be not less than 5 inches apart in the lengthwise direction on types A-1 and A-2. Type B shall be smooth and free from cracks and other obstructions.

3.5 Toxicity. The gasket material shall have no adverse effect on the health of personnel when used for its intended purpose. The gasket material shall be assessed by the Navy Environmental Health Center (NAVENVIRHLTHCEN) using the administrative Health Hazard Assessment (HHA). A flowchart for this process can be found as enclosure (1) of BUMEDINST 6270.8. The HHA is a review of the gasket material based on information submitted by the manufacturer, to assess health hazards associated with the handling, application, use and removal of the product. The gasket material shall not cause any environmental problems during waste disposal (see 4.5 and 6.4).

4. VERIFICATION

4.1 Classification of inspections. The inspection requirements specified herein are classified as follows:

(a) First article inspection (see 4.2).
(b) Conformance inspection (see 4.3).

4.2 First article inspection. First article inspection shall be performed by the contractor, after award of contract and prior to production, utilizing test specimens prepared from the material stock proposed to be used for construction of the gaskets. Three tests shall be performed:

(a) Hardness test (see 4.4.2).
(b) Adhesion test (see 4.4.3).
(c) Sealing pressure test (see 4.4.4).

One test specimen shall be provided for each test in accordance with the test methods specified herein.

4.2.1 First article inspection report. The contractor shall furnish a first article inspection report in accordance with the data ordering document included in the contract (see 6.2).

4.3 Conformance inspection.

4.3.1 Inspection lot. An inspection lot shall consist of all gaskets of the same type produced under essentially the same conditions, and offered for inspection at one time.

Downloaded from http://www.everyspec.com

4.3.2 Sampling for visual and dimensional examination. From each lot, a random sample of gaskets shall be selected for visual and dimensional examination (see 4.4.1), in accordance with ANSI Z1.4 for general inspection level II. MIL-STD-289 shall be used to identify defects in rubber gaskets.

4.3.3 Disposition of sample units. Sample gaskets which have been subjected to visual and dimensional examination (see 4.4.1) and determined to have one or more major defects shall not be offered for delivery to the Government.

4.4 Examinations and tests.

4.4.1 Visual and dimensional examination. Each of the sample gaskets selected in accordance with 4.3.2 shall be visually and dimensionally examined to verify conformance with this specification. MIL-STD-289 shall be used to identify defects.

4.4.2. Hardness. The hardness shall be determined by test method ASTM D 2240 (see 3.2.1).

4.4.3. Adhesion. Adhesion shall be tested in accordance with method B of ASTM D 429. The adhesion shall meet the requirements of 3.2.3.

4.4.4. Sealing pressure. Sealing pressure shall be determined by test method 3211 of FED-STD-601. The sealing pressure shall meet the requirements of 3.2.4.

4.5 Toxicity. To determine conformance with the requirements of 3.5, the gasket material shall be evaluated using the HHA process. Sufficient data to permit a HHA of the product shall be provided by the manufacturer/distributor to the NAVENVIRHLTHCEN. To obtain current technical information requirements specified by the NAVENVIRHLTHCEN, see 6.4.

5. PACKAGING

5.1 Packaging. For acquisition purposes, the packaging requirements shall be as specified in the contract or order (see 6.2). When packaging of materiel is to be performed by DoD or in-house contractor personnel, these personnel need to contact the responsible packaging activity to ascertain packaging requirements. Packaging requirements are maintained by the Inventory Control Point's packaging activities within the Military Service or Defense Agency, or within the military service's system command. Packaging data retrieval is available from the managing Military Department's or Defense Agency's automated packaging files, CD-ROM products, or by contacting the responsible packaging activity.

6. NOTES

(This section contains information of a general or explanatory nature that may be helpful, but is not mandatory.)

6.1 Intended use. Types A-1 and A-2 gaskets are intended for use where tightness is desired between two flat surfaces, and are designed to be fastened by American National Standard No. 10 screws and cemented to hatch covers or ballistic doors by a non-hardening acetone cement. Type B gaskets are fitted to retainer strips and secured with adhesive, 1/8 inch by 5/8-inch flat bar and No. 10 screws. These gaskets are of interest to the US Navy because they are used with shipboard unique enclosures that have rigorous performance requirements.

6.2 Acquisition requirements. Acquisition documents should specify the following:

(a) Title, number and date of this specification.
(b) Type and number or length (see 1.2).
(c) When first article is required (see 3.1).
(d) Is Material Safety Data Sheet required? (see 6.3).

Downloaded from http://www.everyspec.com

(e) Is NEHC toxicity evaluation required? (see 6.4).

6.2.1 Type A-1 and A-2 gaskets should be purchased by the piece. Type B gaskets should be purchased in rolls of convenient lengths. Lengths of 100 feet are suggested. Since the strip can be bent to conform to corner radii, no provisions are made to furnish molded corner pieces for this type of gasket.

6.3 Material safety data sheets. Contracting officers will identify those activities requiring copies of completed Material Safety Data Sheets prepared in accordance with FED-STD-313. In order to obtain the MSDS, FAR clause 52.223-3 must be in the contract.

6.4 Toxicity evaluation. The NAVENVIRHLTHCEN requires sufficient information to permit a HHA of the product. Any questions concerning toxicity and requests for HHA should be addressed to the Commanding Officer, Navy Environmental Health Center, ATTN: Hazardous Materials Department, Industrial Hygiene Directorate, 620 John Paul Jones Circle, Suite 1100, Portsmouth, VA 20378-2103. Upon receipt of the HHA, a copy should be provided to Commander, Naval Sea Systems Command, ATTN: SEA 05Z9, 1333 Isaac Hull Ave., SE, Stop 5133, Washington Navy Yard, DC 20376-5160.

6.5 Shelf life. This specification covers items where shelf life is a consideration. Specific shelf-life requirements should be specified in the contract or purchase order. The shelf-life codes are contained in the Federal Logistics Information System Total Item Record. Additive information for shelf-life management may be obtained from *DoD 4140.27-M, Shelf-life Management Manual*, or the designated shelf-life Points of Contact (POC). The POC should be contacted in the following order: (1) the Inventory Control Points (ICPs), and (2) the DoD Service and Agency administrators for the DoD Shelf-Life Program. Appropriate POCs for the DoD Shelf-Life Program can be contacted through the DoD Shelf-Life Management website: http://www.shelflife.hq.dla.mil/.

6.6 Subject term (key word) listing.

Adhesion
Metal strip
Rubber
Sealing Pressure

6.7 Changes from previous issue. Marginal notations are not used in this revision to identify changes with respect to the previous issue due to the extent of the changes.

Downloaded from http://www.everyspec.com

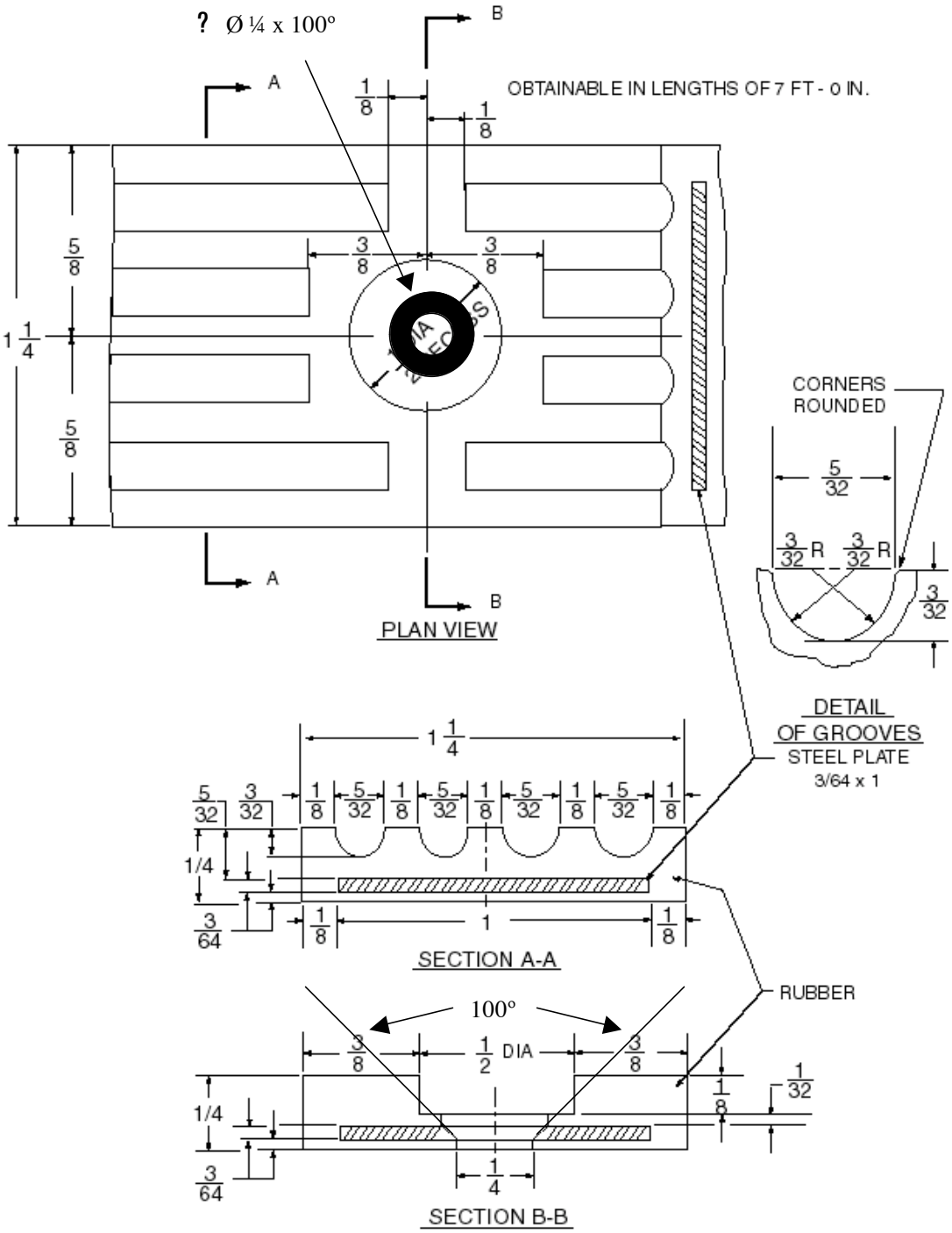

SH 1096

Notes: Except as noted, all dimensions are in inches.

FIGURE 1. Details for types A-1 and A-2.

Downloaded from http://www.everyspec.com

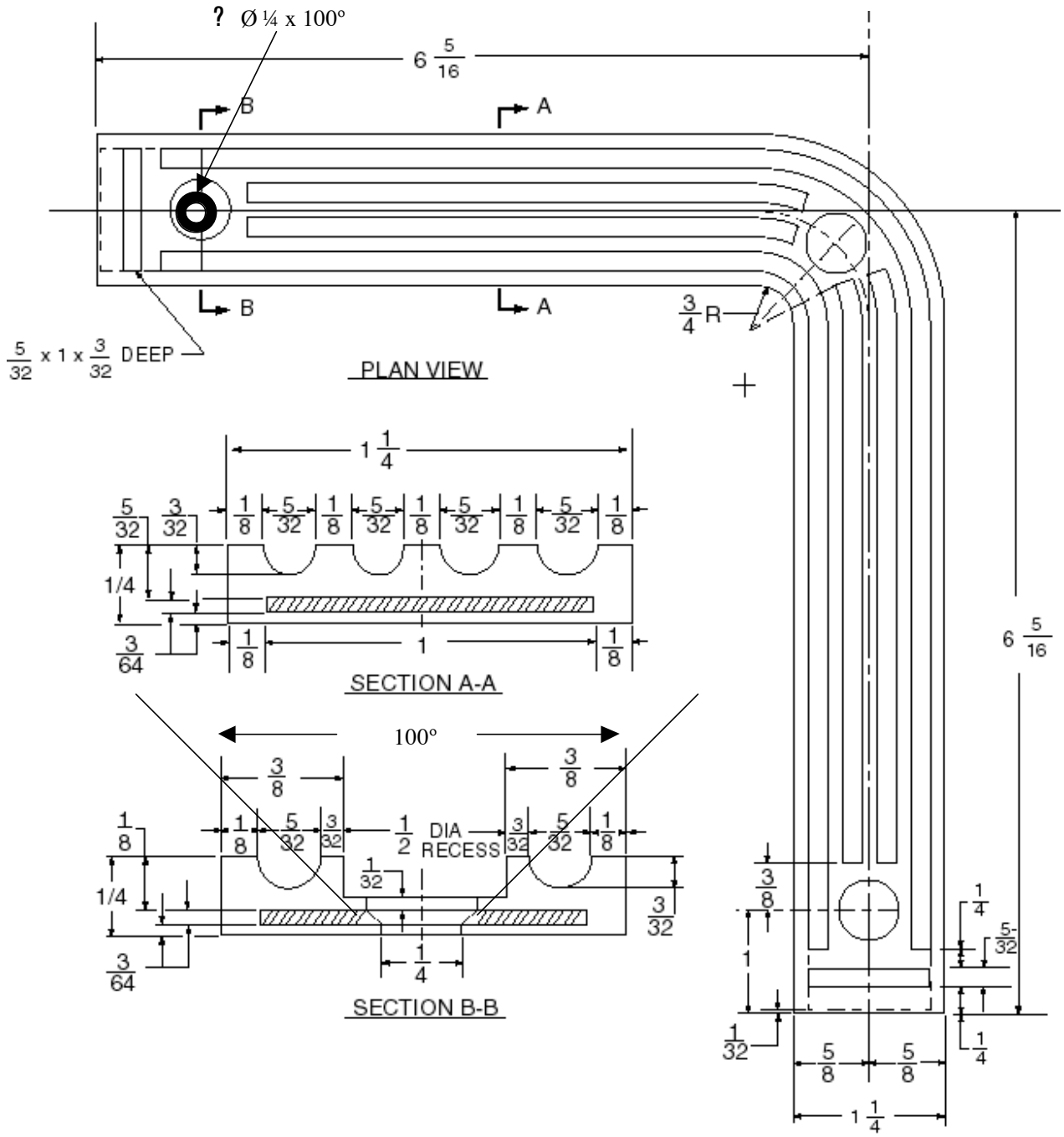

SH 1097

Note: For additional details of rubber gasket, see Figure 1.

FIGURE 2. Detail of type A-2.

Downloaded from http://www.everyspec.com

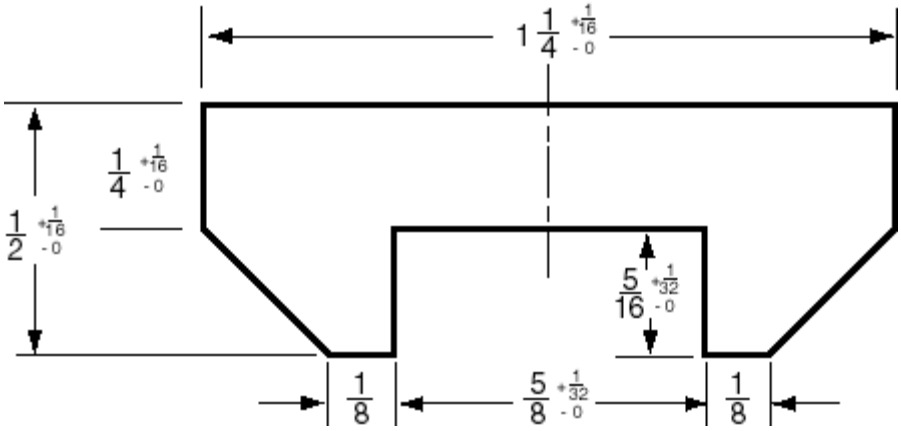

SH1098

Note: All dimensions are in inches.

FIGURE 3. Type B section.

Downloaded from http://www.everyspec.com

Custodians:
Army - AR
Navy - SH

Review activity:
Army - AV
DLA - IS

Preparing activity:
Navy - SH
(Project 5330-1280)

NOTE: The activities listed above were interested in this document as of the date of this document. Since organizations and responsibilities can change, you should verify the currency of the information above using the ASSIST Online database at www.dodssp.daps.mil.