Downloaded from http://www.everyspec.com

INCH-POUND

MIL-DTL-18375D
22 FEBRUARY 1999
SUPERSEDING
MIL-DTL-18375C
15 August 1997

MILITARY SPECIFICATION

WIRE ROPE, FLEXIBLE, CORROSION-RESISTING, NONMAGNETIC, FOR AIRCRAFT CONTROL

This specification is approved for use by all Departments and Agencies of the Department of Defense.

1. SCOPE

1.1 Scope. This specification covers the requirements for nonmagnetic, corrosion-resistant steel wire rope used in aircraft flight controls. The wire rope should be capable of operation within a -54 °C to +121 °C (-65 °F to +250 °F) temperature range in wind, dust, fuel and oil spills, in aircraft wash-down and other environmental stresses and aircraft experiences.

2. APPLICABLE DOCUMENTS

2.1 General. The documents listed in this section are specified in sections 3 and 4 of this specification. This section does not include documents cited in other sections of this specification or recommended for additional information or as examples. While every effort has been made to ensure the completeness of this list, document users are cautioned that they must meet all specified requirements and documents cited in sections 3 and 4 of this specification, whether or not they are listed.

* Beneficial comments (recommendations, additions, deletions) and any pertinent data which may be of use in improving this document should be addressed to: Defense Supply Center Richmond, ATTN: DSCR-VCA, Richmond, VA 23297-5610 by using the Standardization Document Improvement Proposal (DD Form 1426) appearing at the end of this document or by letter.

AMSC N/A FSC 1560

DISTRIBUTION STATEMENT A. Approved for public release; distribution is unlimited.

Downloaded from http://www.everyspec.com

SPECIFICATIONS

MILITARY

*	**MIL-DTL-781**	**Terminal: Wire Rope Swaging**

STANDARDS

MILITARY

*	**MIL-STD-129**	**Marking for Shipment and Storage**

(Copies of specifications, standards, drawings, and publications required by the contractor in connection with specific acquisition functions should be obtained from the procuring activity or as directed by the contracting officer.)

2.2 Other publications. The following documents form a part of this specification to the extent specified herein. Unless otherwise indicated, the issue in effect on date of invitation for bids or request for proposal should apply.

American National Standards Institute

ANSI B46. 1-78	**Surface Texture (Surface Roughness, Waviness and Lay)**

(Application for copies should be addressed to the American National Standards Institute, Inc., 1430 Broadway, New York, NY 10018.)

Society Of Automotive Engineers, Inc.

SAE-HS-1086	**- Metals and Alloys in the Unified Number System**

(Application for copies should be addressed to the Society of Automotive Engineers, Inc., 400 Commonwealth Drive, Warrendale, PA 15096.)

American Society for Testing and Materials

ASTM E8	**Tension Testing of Metallic Materials, Methods**
ASTM A342	**Materials, Feebly Magnetic, Permeability of**

(Application for copies should be addressed to the American Society for Testing and Material, 1916 Race Street, Philadelphia, Pennsylvania 19103.)

Uniform Freight Classification Committee

Uniform Freight Classification Rules

(Application for copies should be addressed to the Uniform Classification Committee, Room 1106, 222 South Riverside Plaza, Chicago, Illinois 60606.)

2.3 Order of precedence. In the event of a conflict between the text of this specification and the references cited herein, the text of this specification should take precedence.

Downloaded from http://www.everyspec.com

3. REQUIREMENTS

3.1 Qualification. Wire rope (see 6.4.3) furnished under this specification shall be products that are qualified for listing on the applicable qualified products list at the time of award of contract (see 4.2 and 6.3). Products must be qualified by a test facility located in the continental United States or Canada (see 4.1).

3.2 Materials

3.2.1 Steel. Corrosion resistant steel UNS S30500 in accordance with SAE HS-1086 shall be used.

3.2.2 Lubricant. The wire rope shall be coated with a friction-preventative noncorrosive lubricant. The lubricant shall be applied so that each wire is coated. As a minimum the lubricant shall be capable of operating at temperatures from -54°C (-65°F) to +121°C (+250°F).

3.3 Construction

* **3.3.1 Wire. The wire (see 6.4.1) used in steel wire rope shall be cylindrical, smooth and of uniformly high quality.**

3.3.1.1 Wire properties. Tensile strengths of wire and wire sizes shall be such that wire rope will be capable of meeting the requirements of this specification.

3.3.1.2 Preforming (see 6.4.4) of wires and strands. The individual wires and strands composing the wire rope shall be shaped into the exact helical position they will have in the finished wire rope, so that if the wire rope is cut or severed there is no tendency for the measured diameter of the wire rope at the unseized cut ends to increase by more than the amount specified in table I.

3.3.1.3 Splicing and joining. All splices or joints in wires less than .008 inch may be longitudinally twisted, but all wire sizes of .008 inch or more shall be brazed or welded. Any joints in individual wires in any layer of a strand (see 6.4.2) shall not be closer than 20 feet except as specified in 3.3.1.3.1.

3.3.1.3.1 Twist-off. When a twist-off (see 6.4.4) occurs during fabrication of the 7-wire layer of a 19-wire strand (see 3.3.1.3), splices and joints in individual wires may be as close as 18 inches.

3.3.2. Wire rope lengths. The wire rope shall be furnished on reels in lengths specified by the procuring activity. There will be no more than two pieces of wire rope on the reel. The shortest piece shall be a minimum of 20 percent of the reel length. The distance to the break point on the reel shall be marked on the reel and Package.

Downloaded from http://www.everyspec.com

TABLE I. Wire rope construction and physical properties.

Nominal diameter of wire rope In	Tolerance on diameter (plus only In	Allowable increase of diameter at cut end In	Construction	Minimum breaking strength before endurance testing Lbs	Approximate weight per 100 ft Lbs
1/16 (.062)	.010	.009	7 x 7	360	0.75
3/32 (.094)	.012	.010	7 x 7	700	1.60
1/8 (.125)	.014	.011	7 x 19	1,300	2.90
5/32 (.156)	.016	.017	7 x 19	2,000	4.50
3/16 (.188)	.018	.019	7 x 19	2,900	6.50
7/32 (.219)	.018	.020	7 x 19	3,800	8.60
1/4 (.250)	.018	.021	7 x 19	4,900	11.00
9/32 (.281)	.020	.023	7 x 19	6,100	13.90
5/16 (..313)	.022	.024	7 x 19	7,600	17.30
3/8 (.375)	.026	.027	7 x 19	11,000	24.30

*

3.3.3 Types of construction. Flexible steel wire rope shall be 7 by 7, or 7 by 19 construction for the respective diameters. The dimensional tolerances and the physical properties shall be as specified in table I.

3.3.3.1 Construction 7 by 7. Wire rope of this construction shall consist of 6 outer strands of 7 wires each laid around a core strand of 7 wires. The 6 outer strands shall each consist of a layer of 6 wires laid around a center wire in a left-hand direction. The core strand shall consist of a layer of 6 wires laid around a center wire in a right-hand direction. The 6 outer strands shall be laid around the core strand in a right-hand direction. The length of lay of the outside 6 wires in each of the 7 strands shall not exceed 60 percent of the lay of the finished wire rope. The length of the lay of the finished wire rope shall be not more than 8 or less than 6 times the normal rope diameter.

3.3.3.2 Construction 7 by 19. Wire rope of this construction shall consist of 6 outer strands of 19 wires each laid around a core strand of 19 wires. The 6 outer strands shall each consist of an inner layer of 6 wires laid around a center wire in a left-hand direction and an outer layer of 12 wires laid over the inner layer of 6-wire layer in a left-hand direction. The core strand shall consist of an inner layer of 6 wires laid around a center wire in a right-hand direction and an outer layer of 12 wires laid over the inner 6-wire layer in the right-hand direction. The 6 outer strands shall be laid around the core strand in a right-hand direction. The length of lay of the inner 6-wire layer in each of the 7 strands shall not exceed 60 percent of the lay of the outer 12-wire layer. The length of lay of the outer 12-wire layer in each of the 7 strands shall not exceed 50 percent of the lay of the finished wire rope. The length of lay of the finished wire rope shall be not more than 8 times or less than 6 times the normal wire rope diameter.

3.4 Performance

3.4.1 Breaking strength. The wire rope shall have the minimum breaking strength shown in table I.

3.4.2. Endurance. The wire rope shall be capable of withstanding the respective tension load and number of reversals shown in table II without failure. The breaking strength of the wire rope after the endurance test shall be not less than specified in table II.

3.4.3 Stretch limits. The wire rope shall not stretch more than 1.5 percent under a load equal to 60 percent of the applicable minimum breaking strength shown in table I.

Downloaded from http://www.everyspec.com

3.4.4 Ductility of steel. Wire shall not fracture when wrapped in accordance with 4.5.5 prior to wire rope fabrication.

3.4.5 Test load. The wire rope shall be capable of carrying 80 percent of its respective minimum breaking strength load shown in table I without any failures of the individual wires in the rope.

3.4.6 Magnetic permeability. The magnetic permeability of the wire rope shall not exceed 1.5 in a magnetic field of 200 oersteds.

3.4.7 Operating range. The wire rope shall be capable of operation in wind, dust, fuel, and oil spills, wash-down and other aircraft environmental stresses and experiences within a -54 °C to +121 °C (-65 °F to +250 °F) temperature range.

TABLE II. Wire rope endurance test parameters and breaking strength after endurance testing.

		Endurance test parameters 1/		
Nominal diameter of wire rope In	Construction	Minimum tension load 2/ Lbs	Number of reversals 3/	Minimum breaking strength after endurance testing 4/
1/16	7 x 7	5.0	70,000	216
3/32	7 x 7	9.0	70,000	420
1/8	7 x 19	18.0	70,000	780
5/32	7 x 19	24.0	130,000	1,200
3/16	7 x 19	37.0	130,000	1,740
7/32	7 x 19	50.0	130,000	2,280
1/4	7 x 19	64.0	130,000	2,940
9/32	7 x 19	78.0	130,000	3,660
5/16	7 x 19	90.0	130,000	4,560
3/8	7 x 19	120.0	130,000	6,600

1/ The tension loads and number of reversals are test parameters only and are by no means intended as design criteria.
2/ Tension load is equal to one-half the weight (w) as shown in figure 1.
3/ 2 reversals = 1 cycle. 13 1/2 inches of travel in one direction and return.
4/ Each value is equal to 60 percent of the original minimum breaking strength of the wire rope as shown in table I.

3.5 Identification of Product. The wire rope shall be identified in accordance with the following:

3.5.1 Identification by number. Each manufacturer shall assign a significant identification number on each manufacturing reel of wire rope. When the wire rope on the manufacturing reel is cut to specified lengths for transfer to the shipping reel, each shipping reel shall be marked with the identification number of the manufacturing reel.

3.5.2 Identification by color tracer filament. Each manufacturer shall identify every wire rope made to this specification by the use of color tracer filaments manufactured into the rope. The specification preparing activity shall assign a combination of two colors to each manufacturer desiring qualification. The inclusion of color tracing filaments does not signify that the wire rope is in full conformance, but only serves to identify the manufacturer.

Downloaded from http://www.everyspec.com

3.5.3 Identification of reels and shipping containers. Each shipping reel and shipping container shall be marked in accordance with the requirements of MIL-STD-129. The following information shall be included:

a. Stock No. or identification as specified in the contract 1/
b. Size (include diameter of wire rope and construction).
c. Name of wire rope manufacturer
d. Name of contractor
e. Contractor order number
f. Type of wire rope construction and specification number (MIL-DTL-18375)
g. Date of manufacture (month/year)
h. For reels with 2 lengths of wire rope, record distance from outside end to separation point and total length of wire rope on the reel
i. Manufacturing reel/lot number.

1/ The contractor shall enter the NSN (National Stock Number) specified in the contract or as furnished by the procuring activity. Space shall be left for the NSN when not available.

3.6 Workmanship and finish. All details of workmanship and finish shall be in accordance with the best practice for high quality aircraft wire rope consistent with the requirements of this specification. The finished wire rope shall be uniform in construction and securely laid, free from kinks, loose wires, loose strands, non-uniform gaps between strands that coincide with the length of lay of the outer strands, or other defects (4.5.1.1).

4. VERIFICATION

4.1 Classification of inspection. The inspection and testing of the wire rope shall be classified as follows:

a. Qualification inspection (see 4.2)

b. Quality conformance inspection (see 4.3)

4.2 Qualification inspection.

4.2.1 Qualification inspection samples. When conducting qualification tests specified herein, one sample lot for each size and construction of wire rope listed in table I, for which qualification is desired, shall be taken after any discard has been removed from the head or starting end of the first manufacturing reel for each lot of wire rope.

4.2.1.1 Lot. A qualification inspection lot shall consist of 50 feet of wire rope of the same construction and diameter produced continuously by one machine or by one series of progressive processing machines.

4.2.2 Qualification testing. Qualification tests shall be performed for each size and construction of wire rope for which qualification is desired as specified in table III.

4.2.3 Retention of qualifications. To retain qualification, the manufacturer must be able to demonstrate that the company still has the capabilities and facilities necessary to produce the items. The qualifying activity will request appropriate documentation demonstrating this capability at the time qualification retention is required (at least 2 year intervals).

4.3 Quality conformance inspection. Quality conformance inspection shall consist of individual tests and sampling tests.

Downloaded from http://www.everyspec.com

4.3.1 Individual tests. Wire rope of each size and construction furnished under each government order or contract shall be subject to the following test for determining conformance to the applicable requirements shown in table III.

a. Examination of Product (4.5.1.1)
b. Conformance test to preforming of wire rope (4.5.1.2)
c. Identification of product (4.5.1.3)
d. Ductility of steel (4.5.5)

4.3.2 Sampling plan

4.3.2.1 Sampling. Except for examination of product, one sample not less than 50 feet in length shall be taken, after any discard has been removed from the head or starting end of the first manufacturing reel for each lot of wire rope for quality conformance testing.

4.3.2.2 Lot. A lot shall consist of not more than 20,000 feet of wire rope of the same construction and diameter produced continuously by one machine or by one series of progressive processing machines.

4.3.2.3 Specimen. A specimen is a piece of wire rope cut from a sample for the performance of a specific quality conformance test.

4.3.3 Sampling tests. The following quality conformance sampling tests shall be performed on each lot of wire rope in accordance with the applicable paragraphs shown in table III. One specimen shall be tested per test. All the specimens shall be from the respective wire rope sample taken in accordance with 4.3.2.1.

TABLE III. Qualification and quality conformance inspection.

EXAMINATIONS AND TESTS	REQUIREMENT PARA	QUALIFICATION PARA	QUALITY CONFORMANCE TEST PARA
Workmanship and finish	3.6	4.5.1.1	4.5.1.1
Preforming of wires and strands	3.3.1.2	4.5.1.2	4.5.1.2
Identification of product	3.5.1 - 3.5.2	4.5.1.3	4.5.1.3
Breaking strength	3.4.1	4.5.2	4.5.2
Endurance test	3.4.2	4.5.3	4.5.3
Stretch test	3.4.3	4.5.4	4.5.4
Ductility of steel	3.4.4	4.5.5	4.5.5
Test load	3.4.5	4.5.6 - 4.5.6.1	4.5.6 - 4.5.6.1
Magnetic permeability	3.4.6	4.5.7	4.5.7

a. Breaking strength (4.5.2)
b. Endurance test (4.5.3)
c. Stretch test (4.5.4)
d. Test load (4.5.6)
e. Magnetic permeability (4.5.7)

4.4 Certification. For each government order or contract, the wire rope manufacturer shall certify that the product satisfactorily passed the quality conformance inspections (see 4.3.1, 4.3.3) of this specification. The certification shall include, as a minimum, actual results of the tests specified herein and shall be retained on file at the manufacturer's facility for a minimum of 7 years.

Downloaded from http://www.everyspec.com

4.5 Test methods

4.5.1 Examination of product

4.5.1.1 Examination of Product. Each sample of wire rope shall be visually examined for workmanship and finish to determine compliance with 3.6.

4.5.1.2 Conformance test to Preforming of wire rope. To test wire rope for conformity to values shown in table I for increase in diameter, wire rope shall be mechanically cut with a cutter having constricting jaws. A plain shear with straight blades distorts the product and may void the test. After cutting, the wire rope shall be measured by passing the wire rope through a hole drilled to a diameter increased as shown in table I under "Allowable increase in diameter at cut end" or by using a shadowgraph with suitable magnification.

4.5.1.3 Identification of product. Each wire rope and shipping reel shall be inspected for proper identification as specified in 3.5.1, 3.5.2 and 3.5.3.

4.5.2 Breaking strength. A specimen for each size and construction of wire rope shall be selected from the sample from each lot. The specimen shall be no less than 24 inches in length, and where necessary, swaged terminals conforming to MIL-DTL-781 (do not use ball end fittings) and accompanying hardware may be used to facilitate installation of the specimen in the jaws of the testing machine. The length of wire rope sample under load shall be no less than 10 inches. The breaking strength shall be determined by use of a tensile testing machine in accordance with applicable requirements of ASTM E 8. The breaking strength shall conform to the requirement of table I. In case of failure due to an unsatisfactory end termination, the test will be disregarded and a new test conducted.

4.5.3 Endurance test. The wire rope specimen and test machinery shall conform to figure 1. The number of reversals and tension loads shall be as specified in table II for the respective wire rope sizes. The total travel of the wire rope per reversal shall be 13 1/2 inches. The test sheaves shall be made of steel and shall conform to the dimensions of figure 2 and table IV. The application of lubricant to the endurance test sample, in addition to the lubricant applied during the manufacture of wire rope, shall not be permitted either before or during the endurance test. The breaking strength of the wire rope specimen after the endurance test shall be determined by the method specified. The test specimen shall be that portion of the wire rope that passes over one of the test sheavess during the endurance test. The breaking strength shall be equal to or greater than the corresponding minimum breaking strength specified in table II.

4.5.4 Stretch test. The total length of the wire rope specimen to be tested shall not be less than 24 inches. When necessary, swaged terminals and accompanying hardware may be used to facilitate installation of the specimen in the jaws of the test machine. The amount of stretch shall be determined on a tension testing machine in accordance with ASTM E 8. The specimen shall be loaded to 1 percent of applicable minimum breaking strength shown in table I to straighten the wire rope. While the specimen is under the 1 percent preload, a gauge length of not less than 10 inches shall be marked on the wire rope between the end fittings of the test specimen. The specimen shall then be loaded to 60 percent of the wire rope's minimum breaking strength and measured for elongation under this load. The percent stretch calculated using the formula below shall not exceed 1.5 percent.

$$\text{Percent stretch} = (100)\ \frac{\text{Elongation of gauge length under load}}{\text{Original gauge length}}$$

4.5.5 Ductility of steel. The wire shall be wrapped in a way which does not cause indenting. The wire shall be wrapped around a cylindrical mandrel for two complete turns in a close helix at a rate not exceeding fifteen turns per minute. The cylindrical mandrel diameter shall be equal to the nominal wire diameter being tested.

Downloaded from http://www.everyspec.com

4.5.6 Test load. The following test shall be made using the same wire rope specimen used in the stretch test, or similarly prepared specimen. Load the specimen to one percent of breaking strength and then increase the loading to 80 percent of the minimum required breaking strength of the wire rope specified in table I. The load shall be applied for 5 seconds. At the end of the test, the entire rope shall be completely unwound and every wire inspected. A suitable electronic device capable of detecting the breaking of individual wires during testing may be used instead of unwinding the wire rope. The failure of any wire shall be cause for rejection (4.5.6.1 and 6.4.13).

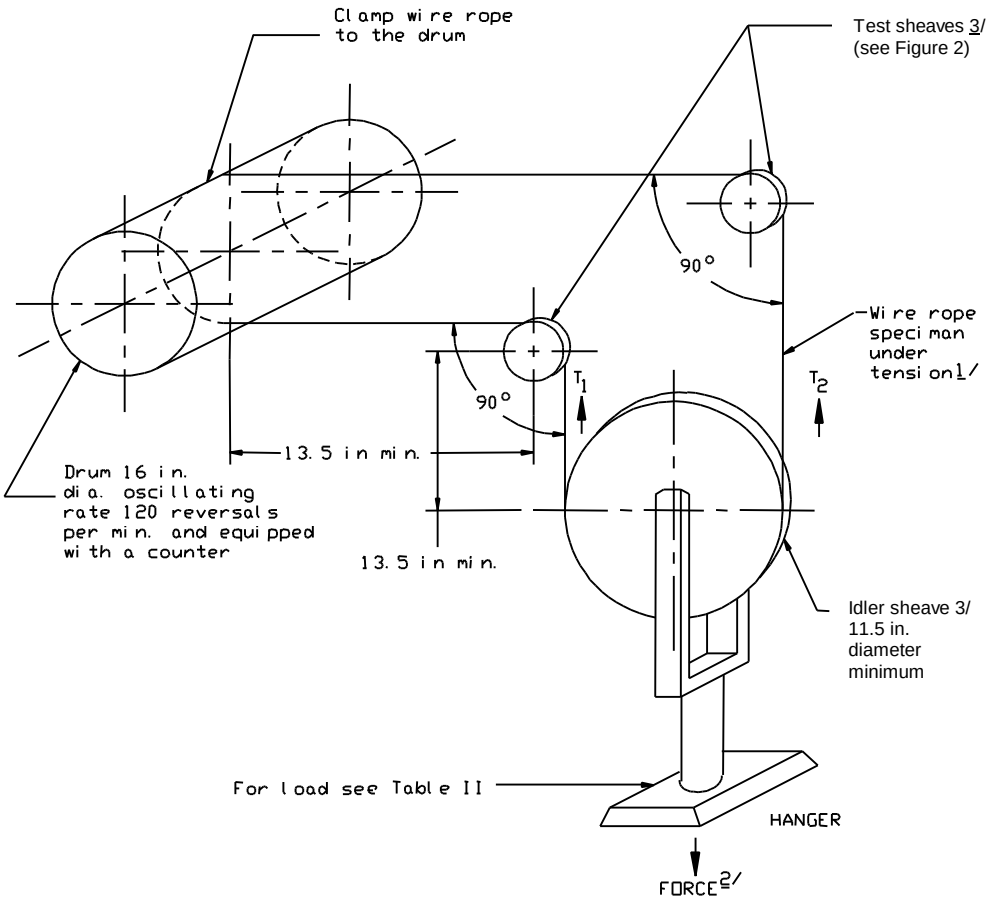

1/ Tension load per table II + $T_1 = T_2 = w/2$

2/ Force necessary to develop the applicable tension load = $w = w_1 + w_2 + w_3$, where

w_1 = weight of idler sheaves

w_2 = weight of hanger

w_3 = weight added to hanger to make the total weight "w" equal to twice the applicable tension load

3/ All sheaves shall be supported on suitable ball or roller bearing, or on shaft extensions supported on suitable ball or roller bearings.

4/ The dimensions of the test sheaves are test parameters only and are by no means intended as design criteria.

Figure 1. Diagram of endurance testing machine and conditions of the test.

Downloaded from http://www.everyspec.com

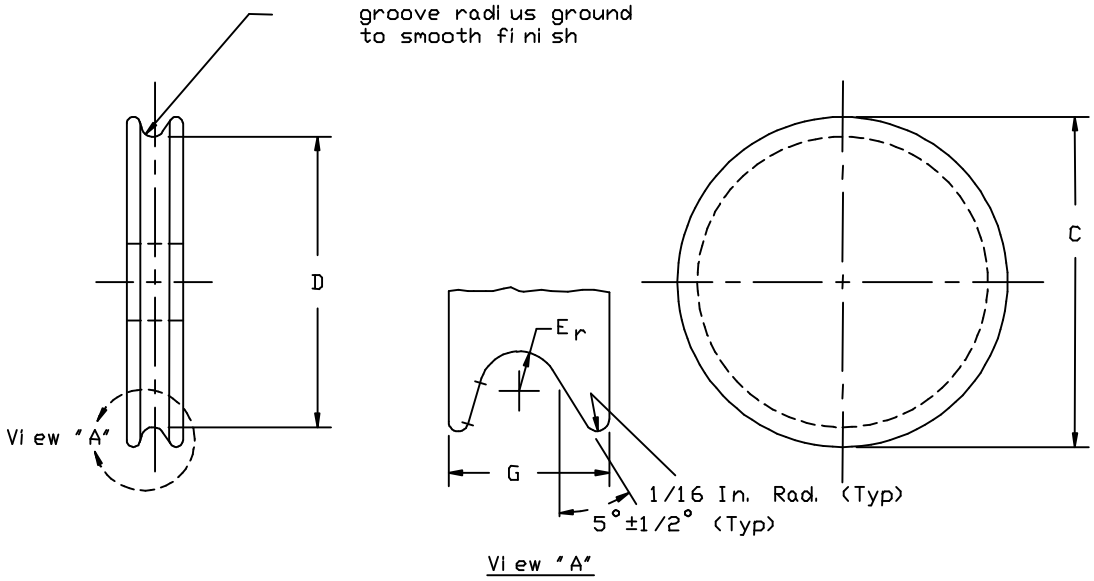

Material: **Tool steel.**

Heat Treat: **Harden to Rockwell C60 minimum.**

Notes: **1/Sheave dimensions per table IV**

Figure 2 Test sheaves used in standard endurance test.

Downloaded from http://www.everyspec.com

TABLE IV. Dimensions of steel sheaves used in endurance test. 1/

Nominal diameter of wire rope (d) In	Construction	Sheaves ratio (D/d)	C 2/ 3/ +1/64 -1/64 In	G 2/ +1/64 -1/64 In	D +.005 -.000 In	Er +.002 -.000 In
1/16	7 x 7	16.0	1.188	3/8	1.000	.036
3/32	7 x 7	13.5	1.531	3/8	1.250	.052
1/8	7 x 19	7.0	1.250	3/8	0.875	.069
5/32	7 x 19	9.5	1.953	3/8	1.484	.086
3/16	7 x 19	9.5	2.343	1/2	1.781	.102
7/32	7 x 19	9.5	2.734	1/2	2.078	.118
1/4	7 x 19	9.5	3.125	1/2	2.375	.134
9/32	7 x 19	9.5	3.515	1/2	2.671	.150
5/16	7 x 19	9.5	3.907	9/16	2.969	.167
3/8	7 x 19	9.5	4.687	9/16	3.562	.200

1/ The dimensions of the test sheaves are test parameters only and are by no means intended as design criteria.
2/ Reference dimension may be varied at manufacturer's direction.
3/ C = D + 3d

4.5.6.1 Use of acoustic, electronic device for wire break test. The load shall be increased to 80 percent on the test specimen. If no ping is heard (6.4.13), the specimen has passed the test. If one or more pings are heard, the wire rope specimens shall be unraveled and the broken wires shall confirm failure of the specimen. If no broken wires are found, the specimen has passed the test.

4.5.7 Magnetic permeability. Each sample selected shall be inspected with the permeability indicator specified in ASTM A342, using the 1.2 insert. All indications shall establish that the permeability of the material does not exceed 1.5.

4.6 Preparation for delivery. The preservation, packaging, packing and marking shall be examined for conformance to section 5.

Downloaded from http://www.everyspec.com

5. PACKAGING

5.1 Packaging. For acquisition purposes, the packaging requirements shall be as specified in the contract or order (see 6.2). When actual packaging of material is to be performed by DoD personnel, these personnel need to contact the responsible packaging activity to ascertain requisite packaging requirements. Packaging requirements are maintained by the Inventory Control Point's packaging activity within the Military Department or Defense Agency, or within the Military Department's System Command. Packaging data retrieval is available from the managing Military Department's or Defense Agency's automated packaging files, CD-ROM products, or by contacting the responsible packaging activity.

6. NOTES

6.1 Intended use. The wire rope covered by this specification is intended for use in aircraft control systems applications where low magnetic permeability and high resistance is needed against corrosion, abrasion, and fatigue wear. Wire rope conforming to composition B of MIL-DTL-83420 has higher strength and magnetic permeability than wire rope conforming to this specification.

6.1.1 Application limitations. Leak-out evaporation of the lubricant applied to the wire rope during fabrication and preparation for shipment can be expected. Therefore, upon installation and periodically throughout the service life, the wire rope should be lubricated. The method of lubrication, frequency, and identity of the approval military standard lubricant should be included in the appropriate aircraft maintenance manuals.

6.2 Ordering data

6.2.1 Acquisition documents. Acquisition documents should specify the following:

- **a. Title, number, and date of this specification**
- **b. Size, construction, and length of wire rope per reel to be furnished**
- **c. Selection of applicable levels of packaging and packing requirements (see section 5)**

6.3 Qualification. With respect to products requiring qualification, awards will be made only for products which are, at the time of award of contract, qualified for inclusion in Qualified Product List QPL-83420 whether or not such products have actually been so listed by that date. The attention of contractors is called to these requirements, and manufacturers are urged to arrange to contact the activity responsible for the Qualified Products List to determine the specific requirements that must be met for qualification. The
* **activity responsible for the Qualified Products List is Defense Supply Center Richmond, ATTN: DSCR-VCA, Richmond, VA 23297-5610 and information pertaining to qualification of products may be obtained from that activity.**

6.4 Definitions

6.4.1 Wire. Each individual cylindrical element is designated as a wire.

6.4.2 Strand. Each group of wires helically twisted is designated as a strand.

6.4.3. Wire rope. A group of 3 or more strands helically twisted or laid around a central core strand is designated as a wire rope. The outer strands and the core strand act as a unit.

6.4.4 Preforming. Wire rope consisting of wires and strands shaped, during fabrication of wire rope, to conform to the form or curvature which they take in the finished wire rope.

6.4.5 Diameter. The diameter of wire rope is the diameter of the circumscribing circle, or the distance across the opposite strands.

Downloaded from http://www.everyspec.com

6.4.6 Lay (or twist). The helical form taken by the wires in the strand and by the strands in the wire rope is characterized as the lay (or twist) of the strands or wire rope, respectively. In a right-hand lay, the wires of strands are the same direction as the thread on a right-hand screw, and for a left-hand lay, the strands or wires lay in an opposite direction.

6.4.7 Regular lay. Wire rope in which the direction of the lay of the wires in the strand is in an opposite direction to the lay of the strand in the wire rope.

6.4.8 Length of lay (or pitch). The distance parallel to the axis of the strand or wire rope, in which a wire or strand makes one complete turn about the axis, is designated as the length of lay (or pitch) of the strand or wire rope.

6.4.9 Center wire. The center of all strands is an individual wire and is designated as a center wire.

6.4.10 Core strand. A strand core consists of a single straight strand made of wires similar to the other strands comprising the wire rope in arraignment and number of wires.

6.4.11 Master reel. The master reel is a large manufacturing reel that is used to hold the wire rope as it is continuously manufactured.

6.4.12 Shipping reel. The shipping reels are cut from the master reel as needed.

6.4.13 Ping. Ping is an audible sound given off as a result of an individual wire breaking in the wire rope. The sound is amplified and fed into a speaker system to a level distinctly detectable by the human ear.

6.4.14 Twist-off. Twist-off is a twisting severance of the strand or wire due to a malfunctioning of the stranding equipment.

6.5 Keywords.

Aircraft
Guide
Pliable
Steel wire rope
Magnetic

6.6 Change from previous issue. The margins of this specification are marked with asterisks to indicate where changes from the previous issue were made. This was done as a convenience only and the Government assumes no liability whatsoever for any inaccuracies in these notations. Bidders and contractors are cautioned to evaluate the requirements of this document based on the entire content irrespective of the marginal notations and relationship to the previous issue.

Custodians:
Army - MI
Navy - AS
Air Force - 99

Reviewer:
Army - CR4
Air Force - 82
DLA - IS

Preparing activity
DLA - GS

(Project No. 1560-0228)

Downloaded from http://www.everyspec.com

STANDARDIZATION DOCUMENT IMPROVEMENT PROPOSAL

INSTRUCTIONS

1. The preparing activity must complete blocks 1, 2, 3, and 8. In block 1, both the document number and revision letter should be given.

2. The submitter of this form must complete blocks 4, 5, 6, and 7.

3. The preparing activity must provide a reply within 30 days from receipt of the form.

NOTE: This form may not be used to request copies of documents, nor to request waivers, or clarification of requirements on current contracts. Comments submitted on this form do not constitute or imply authorization to waive any portion of the referenced document(s) or to amend contractual requirements.

I RECOMMEND A CHANGE:	**1. DOCUMENT NUMBER** MIL-DTL-18375D	**2. DOCUMENT DATE (YYMMDD)** 990222

WIRE ROPE, FLEXIBLE, CORROSION-RESISTING, NONMAGNETIC, FOR AIRCRAFT CONTROL

4. NATURE OF CHANGE *(Identify paragraph number and include proposed rewrite, if possible. Attach extra sheets as needed.)*

5. REASON FOR RECOMMENDATION

6. SUBMITTER

a. NAME *(Last, First, Middle Initial)*	b. ORGANIZATION	
c. ADDRESS *(Include Zip Code)*	d. TELEPHONE (Include Area Code) (1) Commercial (2) AUTOVON *(if applicable)*	**7.DATE SUBMITTED** (YYMMDD)

8. PREPARING ACTIVITY

a. NAME	b. TELEPHONE *Include Area Code)* (1) Commercial (2) AUTOVON
DEFENSE SUPPLY CENTER RICHMOND ATTN: DSCR-VCA RICHMOND, VA 23297-5610	Defense Quality and Standardization Office 5203 Leesburg Pike, Suite 1403 Falls Church, VA 22041-3466 (703) 756-2340 DSN: 289-2340