Downloaded from http://www.everyspec.com

INCH-POUND
MIL-DTL-18001L
w/AMENDMENT 1
15 December 2015

SUPERSEDING
MIL-DTL-18001L
3 December 2013

DETAIL SPECIFICATION

ANODES, SACRIFICIAL ZINC ALLOY

This specification is approved for use by all Departments and Agencies of the Department of Defense.

1. SCOPE

1.1 Scope. This specification covers the requirements for zinc anodes (galvanic protectors) in the form of plates, slabs, discs, and rods for corrosion protection (cathodic protection) of metals and alloys. It also includes features of anode design and fabrication, such as cast-in cores for mounting purposes. The material described by this specification contains elements for which the Occupational Safety and Health Administration (OSHA) has set standards for exposure limits. Handling, storage, and application of this material should be in accordance with the 29 CFR 1910 and 1915 and any other safety and health regulations (local or otherwise) which may apply.

1.2 Classification. The anodes are of the following classes, types, and styles, as specified (see 6.2).

1.2.1 Class 1 – cast-in cores.

Type ZHS – Zinc, hull slab (steel straps) (23- and 42-pound sizes).

Type ZHB – Zinc, hull slab (brass straps) (23-pound size).

Type ZHC – Zinc, hull slab (core straps) (23- and 42-pound sizes).

Type ZSS – Zinc, submarine slab (steel strap) (12- and 24-pound sizes).

Type ZTS – Zinc, teardrop shape (steel strap) (5-pound size).

Type ZEP – Zinc, fairwater slab (pipe core or pipe bushing core).

Style A – Square slab (9-pound size).

Style B – Circular slab (various sizes).

Style C – Semi-circular slab (23-pound size).

Type ZBP – Zinc, bar (pipe core) (8-pound size).

Type ZBS – Zinc, bar (steel straps) (8.5-pound size).

Type ZDM – Zinc, segmented disc (machine-formed interlocking core).

Type ZMP – Zinc, mooring chain (pipe core or pipe bushing core) (various sizes).

Comments, suggestions, or questions on this document should be addressed to Commander, Naval Sea Systems Command, ATTN: SEA 05S, 1333 Isaac Hull Avenue, SE, Stop 5160, Washington Navy Yard DC 20376-5160 or emailed to CommandStandards@navy.mil, with the subject line "Document Comment". Since contact information can change, you may want to verify the currency of this address information using the ASSIST Online database at https://assist.dla.mil.

Downloaded from http://www.everyspec.com

1.2.2 Class 2 – plain, no cores.

Type ZRN – Zinc, rod, no core, extruded, drawn or rolled.

Type ZPN – Zinc, plate, no core, rolled.

1.3 Key to symbols. The letter designations for the types of anodes are shown in table I.

TABLE I. Letter designations of anode types.

First letter (designates anode metal)	Second letter (designates shape or general use)	Third letter (designates core)
Z - (zinc)	H - (hull slab)	B - (brass strap)
	S - (submarine slab)	S - (steel strap)
	T - (teardrop shape)	C - (core strap)
	E - (fairwater slab)	P - (pipe core)
	R - (rod, cylindrical)	M - (machine-formed interlocking core)
	P - (plate)	N - (no core)
	B - (bar, square)	
	D - (disc, segmented)	
	M - (mooring chain)	

2. APPLICABLE DOCUMENTS

2.1 General. The documents listed in this section are specified in sections 3 and 4 of this specification. This section does not include documents cited in other sections of this specification or recommended for additional information or as examples. While every effort has been made to ensure the completeness of this list, document users are cautioned that they must meet all specified requirements of documents cited in sections 3 and 4 of this specification, whether or not they are listed.

2.2 Government documents.

2.2.1 Specifications, standards, and handbooks. The following specifications, standards, and handbooks form a part of this document to the extent specified herein. Unless otherwise specified, the issues of these documents are those cited in the solicitation or contract.

FEDERAL SPECIFICATIONS

QQ-B-639 - Brass, Naval: Flat Products (Plate, Bar, Sheet, and Strip)

FEDERAL STANDARDS

FED-STD-H28 - Screw-Thread Standards for Federal Services

FED-STD-H28/7 - Screw-Thread Standards for Federal Services Section 7 Pipe Threads, General Purpose

(Copies of these documents are available online at http://quicksearch.dla.mil.)

2.2.2 Other Government documents, drawings, and publications. The following other Government documents, drawings, and publications form a part of this document to the extent specified herein. Unless otherwise specified, the issues of these documents are those cited in the solicitation or contract.

Downloaded from http://www.everyspec.com

CODE OF FEDERAL REGULATIONS (CFR)

29 CFR 1910 - Occupational Safety and Health Standards

29 CFR 1915 - Occupational Safety and Health Standards for Shipyard Employment

(Copies of these documents are available online at http://www.ecfr.gov.)

2.3 Non-Government publications. The following documents form a part of this document to the extent specified herein. Unless otherwise specified, the issues of these documents are those cited in the solicitation or contract.

ASTM INTERNATIONAL

ASTM A36/A36M - Standard Specification for Carbon Structural Steel

ASTM A53/A53M - Standard Specification for Pipe, Steel, Black and Hot-Dipped, Zinc-Coated, Welded and Seamless

ASTM A513/A513M - Standard Specification for Electric-Resistance-Welded Carbon and Alloy Steel Mechanical Tubing

ASTM A524 - Standard Specification for Seamless Carbon Steel Pipe for Atmospheric and Lower Temperatures

ASTM B139/B139M - Standard Specification for Phosphor Bronze Rod, Bar, and Shapes

ASTM E290 - Standard Test Methods for Bend Testing of Material for Ductility

ASTM E536 - Standard Test Methods for Chemical Analysis of Zinc and Zinc Alloys

(Copies of these documents are available online at www.astm.org.)

EUROPEAN COMMITTEE FOR STANDARDIZATION

BS EN 10025-1 - Hot Rolled Products of Structural Steels. General Technical Delivery Conditions

BS EN 10305-1 - Steel Tubes for Precision Applications. Technical Delivery Conditions. Seamless Cold Drawn Tubes

(Copies of these documents are available online at http://shop.bsigroup.com/.)

INTERNATIONAL ORGANIZATION FOR STANDARDIZATION (ISO)

ISO 2768-1 - General Tolerances – Part 1: Tolerances for Linear and Angular Dimensions Without Individual Tolerance Indications

(Copies of this document are available online at www.iso.org.)

2.4 Order of precedence. Unless otherwise noted herein or in the contract, in the event of a conflict between the text of this document and the references cited herein, the text of this document takes precedence. Nothing in this document, however, supersedes applicable laws and regulations unless a specific exemption has been obtained.

3. REQUIREMENTS

3.1 Materials.

3.1.1 Zinc. The anodes shall conform to the composition specified in table II as determined by the methods specified herein (see 4.3.2). Total of elemental constituents not specified in table II shall not exceed 0.10 percent.

Downloaded from http://www.everyspec.com

TABLE II. Chemical composition, zinc anodes.

Element	Weight (percent)
Lead	<0.006
Iron	<0.005
Cadmium	0.025 – 0.07
Copper	<0.005
Aluminum	0.1 – 0.5
Zinc	>99.414

3.1.2 Steel straps and pipe. Type ZHS, ZHC, ZSS, ZBS, and ZTS anodes shall have steel strap cores conforming to ASTM A36/A36M or BS EN 10025-1. Type ZEP and ZBP anodes shall have steel pipe cores conforming to ASTM A524 or BS EN 10305-1. Type ZMP anodes shall have steel pipe cores conforming to ASTM A524 and ASTM A513/A513M. Hot dip or electrodeposition methods may be used. Either coating shall be adherent and free from flaking. The coating shall adhere tenaciously to the surface of the base metal (see 4.3.3.5).

3.1.3 Brass straps. Type ZHB zinc anodes shall have brass strap cores conforming to Alloy 482 of QQ-B-639 or phosphor bronze straps conforming to Composition A of ASTM B139/B139M. The brass or bronze straps shall be coated with zinc to a minimum thickness of 0.0005 inch (0.0127 millimeter) (see 4.3.3.5). The maximum copper content in the zinc, as specified in table II, may be increased to 0.020 percent for Type ZHB anodes.

3.1.4 Steel machine-formed interlocking cores. Type ZDM zinc anodes shall have machine-formed interlocking cores conforming to commercial grade mild or leaded steel. The cores shall be flash coated with zinc, tin, or aluminum prior to assembly within the zinc anodes.

3.1.5 Recycled, recovered, environmentally preferable, or biobased materials. Recycled, recovered, environmentally preferable, or biobased materials should be used to the maximum extent possible, provided that the material meets or exceeds the operational and maintenance requirements, and promotes economically advantageous life cycle costs.

3.1.6 OSHA standards. The material described by this specification contains elements for which the Occupational Safety and Health Administration (OSHA) has set standards for exposure limits. Handling, storage, and application of this material should be in accordance with the most recent 29 CFR 1910 and 1915 and any other safety and health regulations (local or otherwise) which may apply.

3.2 Manufacture.

3.2.1 Type ZHS, ZHB, and ZHC, hull slab anodes (see figures 1 through 3, and 8 through 11), type ZSS, submarine slab anode, type ZBS, zinc bar steel strap anode, and type ZTS, teardrop anodes (see figures 4 through 7 and figure 22). Type ZHS, ZHB, ZHC, ZSS, ZBS, and ZTS anodes shall be manufactured by any casting process provided the anodes meet the other requirements covered by this specification. Open or closed molds may be used. A metallurgical bond shall be obtained between the zinc and the strap when tested as specified in 4.3.1.3 or 4.3.1.4. Type ZHC anodes, shown on figures 9 and 11, are intended for use with rubber washers for submarine application. Countersinks for rubber washers shall be cast or machined. Anode shall be manufactured so that the countersink is centered on the core hole. Type ZSS anodes, shown on figures 4 through 6, and Type ZBS anodes, shown on figure 22, may be mounted by welding or by fasteners. Those intended to be attached by fasteners shall indicate the requirements for mounting holes in the strap. The mounting hole shall be counterbored on the structure side of the strap.

3.2.2 Type ZEP, fairwater slab anode, and type ZMP, mooring chain anode (see figures 12 through 20 and figure 28). The pipe core inserts shall conform to 3.1.2. A sound metallurgical bond shall be obtained between the core and anode material for at least 30 percent of the total surface of the core in contact with the anode when tested as specified in 4.3.1.3 or 4.3.1.4. The position of the pipe core insert shall not vary more than ±⅛ inch (3.3 millimeters) from center as shown on figures 12 through 20 and figure 28.

Downloaded from http://www.everyspec.com

3.2.3 Type ZBP, zinc bar anode (see figure 21) and type ZBS, zinc bar steel strap anode (see figure 22). The position of the pipe core and steel strap insert specified in 3.1.2 shall not vary more than ±¼ inch (6.4 millimeters) from the center as shown on figure 21 and figure 22. The metallurgical bonding requirements between anode and core specified in 4.3.1 shall apply.

3.2.4 Types ZRN and ZPN anodes (no core) (see figure 23, and figures 29 through 30). Type ZPN and ZRN anodes (no core) shall be manufactured by any process provided the anodes pass the tests demonstrating mechanical properties (see 3.6) and other requirements covered by this specification.

3.2.5 Type ZDM, zinc segmented disc, machine-formed interlocking core anode (see figures 24 through 27). Metallic bonding or an interference fit of the core into the anode shall be required so that an axial force applied from the stud end to remove the core insert is a minimum of 750 pounds (340 kilograms).

3.2.5.1 Core insert. The machine-formed core insert specified in 3.1.4 shall be manufactured in accordance with details and tolerances shown in FED-STD-H28 and FED-STD-H28/7. This core insert has been designed for mass production by modern machine methods. The insert consists of an integral piece having a threaded male stud at one end and a tapped hole at the other end. Provision has been made to achieve self-locking characteristics to interlocking threaded assemblies of multiple segmented anode discs by interference fit of bottom male threads into a taper tapped hole. These anodes shall screw together very snugly by hand tightening or by using simple hand tools, such as pliers or pipe wrenches.

3.3 Dimensions. Anode dimensions shall be as specified on figures 1 through 30 (see 4.2.2).

3.3.1 Types ZHS, ZHB, ZHC, ZTS, ZSS, ZBS, ZEP, ZBP, ZDM, ZRN, ZPN, and ZMP anodes. The specified anodes shall conform to the dimensions and tolerances shown on figures 1 through 30, inclusive. Dimensions are in inches unless otherwise indicated on the figure.

3.3.2 Type ZPN anodes. DELETED.

3.3.3 Weight. Minimum weight requirements are specified on figures 1 through 30. The total weight of the specified type of anode received divided by the total number of anodes of that type shall be equal to or greater than the minimum weight of anode type specified (see 4.2.2).

3.4 Permissible variation in dimensions. DELETED.

3.4.1 Length and width of types ZHC, ZHB, ZHS, ZTS, ZPN, ZSS, ZBS, and ZBP anodes. DELETED.

3.4.2 Length of type ZRN anodes. DELETED.

3.4.3 Diameter of types ZEP, ZDM, and ZRN anodes. DELETED.

3.4.4 Thickness. The thickness of Types ZHS, ZHB, ZHC, ZTS, ZPN, ZSS, ZBS, and ZBP anodes shall be taken at random 1 inch (25.4 millimeters) from any edge of the anode by means of a suitable caliper, avoiding any surface irregularities which would interfere with a representative measurement. Type ZEP anode thickness measurements shall be taken at random, a distance from the edge of approximately one-half the radius of the anode.

3.4.5 Eccentricity of core in type ZDM anode. The cores of Type ZDM anode shall be positioned axially and concentrically in the zinc disc. Eccentricity greater than 0.005 inch (0.127 millimeter) shall not be permitted.

3.4.6 Stud hole elongation for type ZSS anodes. When specified (see 6.2), Type ZSS straps may be modified as shown on figure 6.

3.5 Marking of anodes.

3.5.1 Marking. Types ZHS, ZHB, ZHC, ZSS, ZBS, ZBP, ZMP, ZTS, ZEP (with diameters greater than or equal to 6 inches [152.4 millimeters]), and ZPN shall have the anode type and the words “DO NOT PAINT” die-stamped or cast on the exposed face of the anodes (see figures 1 through 12, 17 through 22, and 28 through 30). Markings are optional for Types ZEP (with diameters less than 6 inches [152.4 millimeters]), ZDM, and ZRN zinc anodes. For Type ZMP, the nominal anode size shall be marked as specified on figure 28.

Downloaded from http://www.everyspec.com

3.5.1.1 Type ZHB anode markings. One end of each cast-strap of each Type ZHB anode shall be painted red so that the installing activity can distinguish it from Type ZHS anodes. One coat of red paint shall be applied between the joggled bevel of the strap and zinc anode. The coating shall be approximately ½ inch (12.7 millimeters) wide and shall extend across one side of each strap so as to be readily visible when the anode is installed. The foot of the strap shall not be painted.

3.5.2 Heat identification. Each anode shall be cast or die-stamped with the following: manufacturer's symbol, unique non-recurring heat number specific to production lot (see 4.2.1), and the capital letter corresponding to the revision letter of the military specification to which the anode conforms. (For this specification issue, the letter "L" should be used.)

3.6 Mechanical properties.

3.6.1 Fracture or cracking. When tested in accordance with 4.3.3.3, Type ZRN rods and Type ZPN plates shall not fracture or show signs of cracking.

3.6.2 Torsional shear strength. When tested in accordance with 4.3.3.4, Type ZRN anodes shall have a minimum torsional shear strength of 12,000 pounds per square inch (lb/in^2) (8,437,000 kilograms per square meter [kg/m^2]).

3.7 Workmanship.

3.7.1 Zinc. The zinc anodes shall be free of flash burrs, cracks, blow holes, pipes, and surface slag consistent with good commercial practice (see 4.2.2). The cast anodes shall be free of shrinkage cavities exceeding ¼ inch (6.4 millimeters) in depth, except that anodes 2 inches (50.8 millimeters) thick or more shall be free of shrinkage cavities exceeding ⅜ inch (9.5 millimeters) in depth, when measured from a straight edge placed diagonally across the opposite edges of the anode. For Type ZPN anodes, the shrinkage cavities shall be measured over a 12- by 12-inch (304.8- by 304.8-millimeter) area. In addition to the above allowable shrinkage cavities, surface irregularities of the anode exceeding ⅛ inch (3.3 millimeters) in depth shall not be permitted on one face of slab or disc type anodes unless at least ⅛ inch (3.3 millimeters) of sound metal covers the entire strap of core area. Types ZDM and ZRN anodes shall be smooth on their curved surfaces.

3.7.2 Metal cores. Metal core extensions from the anodes shall be smooth and free of sharp burrs. The cast-in cores shall have metallurgical bonds specified herein free of air pockets and inclusions consistent with good commercial practice.

4. VERIFICATION

4.1 Conformance inspection. Conformance inspection shall include the examinations of 4.2 and the tests of 4.3.

4.1.1 Lot. For the purpose of sampling, a lot shall consist of all zinc anodes of the same class and type, poured or cast from one homogeneous heat or melt of a single charge or raw materials. The addition of any material to the heat or melt at any time constitutes a new lot.

4.2 Visual and dimensional examination. Each anode selected in accordance with 4.2.1 shall be examined for conformance to requirements of 3.3 through 3.7. If any anodes do not conform to 3.3 through 3.7, it shall be cause for rejection of the entire lot.

4.2.1 Sampling for visual and dimensional examination. As a minimum, a sample quantity of anodes shall be selected from each lot in accordance with table III. If one or more defects are found in any sample, the entire lot shall be rejected. The contractor has the option of screening 100 percent of the rejected lot for the defective characteristic(s) or providing a new lot which shall be inspected in accordance with the sampling plan provided herein.

Downloaded from http://www.everyspec.com

4.2.2 Examination procedure. Anodes selected in accordance with 4.2.1 shall be measured for weight and dimension, and be visually inspected at 10 times the magnification for workmanship. No cracks with a surface length greater than ⅛ inch (3.3 millimeters) shall be allowed. The entire lot of each type anode shall meet the weight requirements as specified in 3.3.3. If the weight is less than the minimum weight for the type of anode specified or not within the tolerances allowed by this specification, it shall be cause for rejection of the entire lot.

TABLE III. Sampling for visual and dimensional examination.

Lot size	Sample size	Accept	Reject
2 – 25	3	0	1
26 – 50	5	0	1
51 – 90	6	0	1
91 – 150	7	0	1
151 – 280	10	0	1
281 – 500	11	0	1
501 – 1,200	15	0	1
1,201 – 3,200	18	0	1
3,201 – 10,000	22	0	1
10,001 and over	29	0	1

4.3 Tests. The following tests shall be performed.

4.3.1 Core bonding test. One of the following core bonding tests (4.3.1.3 or 4.3.1.4) shall be performed on each anode selected in accordance with 4.3.1.1.

4.3.1.1 Sampling for core bond tests. From each lot specified in 4.1.1, two anodes shall be selected at random of Types ZHS, ZHB, ZHC, ZSS, ZBS, ZTS, ZEP, ZMP, and ZBP and five anode discs of Type ZDM for the test specified.

4.3.1.2 Resampling. In cases where one of the two anodes tested failed to pass the core bond test, four additional anodes may be selected for retest at the direction of the manufacturer.

4.3.1.3 Core bonding test procedure. Each anode selected to represent the lot shall be cut along the axis of each strap or core, and the cut surface shall be ground reasonably smooth. These surfaces shall be polished with a 240-mesh emery abrasive until the zinc-strap interface is distinctly visible. At least 30 percent of this interface shall show no separation when examined at approximately 10 times the magnification. Zinc anodes may have a bead or buttress projecting from the anode edge along the strap not exceeding ¼ inch (6.35 millimeters). Less bond between core and zinc than specified herein shall be cause for rejection of the lot.

4.3.1.4 Alternate core bonding test. Using any suitable method, the cores shall be torn from each anode selected to represent the lot. The use of a sledge hammer to break the zinc away from the cores has been found to be satisfactory. The area showing bond shall be established by visual inspection of the portion of the cores which were contained within the anode. The metallurgical bond between the zinc and the core shall be at least 30 percent of the total surface area of each core in contact with the zinc of the anode. For the purpose of determining the surface area of the encased core in the anode, marks shall be scribed on the strap around the periphery of each anode at locations where the straps protrude from the anode. The total area of the strap shall be computed between the scribe marks. The surfaces shall have a smooth grey matte finish where bonding has been adequate and either a shiny metallic or rough, dark, or discolored finish where bonding has been inadequate. Both core and zinc mating surfaces shall be examined. Less bond between core and zinc than that specified herein shall be cause for rejection of the entire lot.

4.3.1.5 Type ZDM anode. A minimum steady pressure of 750 pounds (340 kilograms) from a hand-operated pen press applied axially shall be required to remove the core from the anode.

Downloaded from http://www.everyspec.com

4.3.1.6 Sample anodes. Sample anodes shall be discarded and not included in the delivery of material after the core bond tests are performed. The remaining lengths of ZRN and ZPN anodes may be included in the delivery of material after the physical tests of 4.3.3. Sampling for chemical analysis, as specified in 4.3.2.1, shall be made prior to discarding the anodes specified in 4.3.1.3 through 4.3.1.5.

4.3.2 Chemical analysis. The chips selected in accordance with 4.3.2.1 shall be analyzed to determine conformance with 3.1.1. A strong magnet shall be used to remove any iron contamination picked up during the preparation of the chips. The chips shall be washed in an iron-free degreasing solvent prior to analysis. If any sample does not conform to the chemical composition specified in table II, it shall be cause for rejection of the lot represented by the sample.

4.3.2.1 Sampling for chemical analysis. Anodes shall be taken from each homogenous lot to verify compliance with the chemical requirements of 3.1.1 and table II. As a minimum, the first, middle, and last poured anode shall be tested to verify compliance with the chemical requirements of 3.1.1 and table II. The drilling for sampling for chemical analysis shall be made with a special nonferrous drill bit. See 4.3.2.7, 6.5.1, and 6.5.2 for sample preparation and drilling procedure. From each of the required anodes, one 2-ounce sample shall be taken by drilling or machining the material at the locations specified in 4.3.2.2 to 4.3.2.7, inclusive. The drill or tool bit shall not penetrate into the core material of the cored type anodes. The drilled or machined anodes may be included in the delivery of the material, except Type ZDM which shall be discarded.

4.3.2.2 Drilling locations. Type ZHS and ZHB anodes shall be drilled or machined at locations about 2 to 5 inches (50.8 to 127 millimeters) from the short edge as appropriate to keep away from the encased core.

4.3.2.3 Drilling precautions. Type ZSS, ZBS, ZHC, and ZTS anodes shall be drilled or machined at points not greater than ½ inch (12.7 millimeters) from the long edge.

4.3.2.4 Drilling points for types ZEP, ZMP, and ZBP. Type ZEP, ZMP, and ZBP anodes shall be drilled at points midway between the outer edge of the core and the edge of the anode.

4.3.2.5 Type ZDM samples. Type ZDM anodes shall have a sufficient number of discs machined or drilled to make two 4-ounce quantities. Type ZDM anodes shall be machined or drilled at the outer surface to a depth not exceeding ¼ inch (6.4 millimeters).

4.3.2.6 Surface chips. One 2-ounce sample for each anode specified in 4.3.2.1 shall be taken at the surface in contact with mold wall by drilling or machining to a maximum depth of ¼ inch (6.4 millimeters). The sample for Types ZPN and ZRN shall be taken by drilling completely through both larger surfaces or through the diameter of the anode, as applicable. The samples shall be collected in individual clean containers, and properly labeled as to lot, melt, and sample numbers. Sample chips may be taken from anodes which have passed the applicable bond test. Samples shall be clean and free from dirt, oil, grit, and foreign matter. The samples shall be sent to a laboratory acceptable to the contracting agency. A method for sampling anodes for chemical analysis is specified in 6.5.

4.3.2.7 Determination of aluminum, cadmium, copper, iron, and lead. The aluminum, cadmium, copper, iron, and lead content of zinc shall be determined in accordance with the appropriate methods in ASTM E536 using the atomic absorption, inductively coupled plasma, or directly coupled plasma spectrophotometers.

4.3.2.8 Spectrochemical analysis. Spectrochemical analysis shall be in accordance with any standard method approved by a standard issue body, such as the American National Standards Institute or ASTM E536, and accepted by the Government.

4.3.3 Physical tests.

4.3.3.1 Sampling for physical testing. At least five Type ZRN and five Type ZPN anodes shall be selected at random from a lot. Type ZRN anodes shall conform to the tests specified in 4.3.3.3 and 4.3.3.4. Type ZPN anodes shall conform to the test specified in 4.3.3.3.

Downloaded from http://www.everyspec.com

4.3.3.2 Physical test sample dimensions for ZPN type anodes. Type ZPN test samples shall be cut from the plate anodes and shall be of the following dimensions:

a. Width: Twice the thickness of the anode.

b. Length: 12 inches (304.8 millimeters) (or to suit test apparatus).

4.3.3.3 Bend test. Type ZRN anodes, selected in accordance with 4.3.3.1, shall be bent 45 degrees around a mandrel that has a diameter of three times the diameter of the Type ZRN anode. Type ZPN anodes, selected in accordance with 4.3.3.2, shall be bent 45 degrees around a mandrel of three times the thickness of Type ZPN anodes. The anodes shall be bent in accordance with procedures specified in ASTM E290. After bending, the convex surface of the specimens shall be inspected for cracking by visual examination. Any evidence of cracking shall represent failure of the test and shall be cause for rejection of the entire lot.

4.3.3.4 Torsional shear test. Type ZRN anodes, selected in accordance with 4.3.3.1, shall be subjected to torsional shear at a rate of 10 to 12 revolutions per hour using a Tinius-Olson torsional shear apparatus, or equal. Failure of the anode to withstand a torsional shear of 12,000 lb/in^2 (8,437,000 kg/m^2) shall be cause for rejection of the lot.

4.3.3.5 Strap/pipe core coating test. When the coating is cut or pried into, such as with a stout knife applied with considerable pressure in a manner tending to remove a portion of the coating, it shall only be possible to remove small particles of the coating by paring or whittling, and it shall not be possible to peel any portion of the coating so as to expose the steel. Lack of adhesion of the zinc coating at bend or absence of zinc coating at cut edges shall not be cause for rejection of fabricated anodes. Cracks in the base metal shall be cause for rejection.

5. PACKAGING

5.1 Packaging. For acquisition purposes, the packaging requirements shall be as specified in the contract or order (see 6.2). When packaging of materiel is to be performed by DoD or in-house contractor personnel, these personnel need to contact the responsible packaging activity to ascertain packaging requirements. Packaging requirements are maintained by the Inventory Control Point's packaging activities within the Military Service or Defense Agency, or within the military service's system commands. Packaging data retrieval is available from the managing Military Department's or Defense Agency's automated packaging files, CD-ROM products, or by contacting the responsible packaging activity.

6. NOTES

(This section contains information of a general or explanatory nature that may be helpful, but is not mandatory.)

6.1 Intended use. The anodes are primarily intended for use in corrosion prevention in seawater of surface ship and submarine hulls, steel and aluminum equipment and structures, sea chests, sonar domes, mooring chains, and the seawater side of condensers and other heat exchangers. The anodes may also be used for corrosion prevention of pipe lines and other installations underground. The use of a particular anode is determined by the nature and geometry of the structure to be protected. Refer to applicable installation instructions for types, amounts, locations, and mounting of anodes.

6.2 Acquisition requirements. Acquisition documents should specify the following:

a. Title, number, and date of this specification.

b. Class and type (see 1.2).

c. As required, the specific issue of individual documents referenced (see 2.2.1, 2.2.2, and 2.3).

d. Style of Type ZEP, diameter of Type ZEP (Style B), pipe core size (⅜ inch or ½ inch); size of Type ZMP (see figure 28); diameter of Type ZDM (see figures 24 through 27); diameter of Type ZRN required (see figure 23); Type ZHC, ship or submarine usage with neoprene washers (see figures 8 through 11).

e. Thickness of Type ZPN anode, whether ½ or 1 inch (see figures 29 and 30).

f. Elongation of Type ZSS anode straps (see 3.4.6).

Downloaded from http://www.everyspec.com

g. Packaging requirements (see 5.1).

h. Total number of anodes required (see 6.3).

6.3 Ordering by quantity. The order for anodes should specify the exact number of anodes required (see 6.2). See table IV for National Stock Numbers (NSN) for various anode types.

TABLE IV. National stock numbers.

Anode type	Size (inches)	National stock number
ZHS-23	12 x 6 x 1.25	5342-00-277-7559
ZHS-42	12 x 6 x 2.5	5342-00-134-8131
ZHB-23	12 x 6 x 1.25	5342-00-662-9827
ZHC-23	12 x 6 x 1.25	5342-00-813-6058
ZHC-42	12 x 6 x 2.5	5342-00-486-0957
ZSS-12	12 x 3 x 1.25	5342-00-290-8243
ZSS-12 (ELONGATED STRAP END)	12 x 3 x 1.25	5342-01-356-6382
ZSS-24	12 x 3.5 x 2.5	5342-01-357-4579
ZSS-24 (ELONGATED STRAP END)	12 x 3.5 x 2.5	5342-01-356-6383
ZTS-5	9 x 3 x 1.375	5342-01-294-2332
ZEP-A (SQUARE)	6 x 6 x 1	5342-00-543-3032
ZEP-B (CIRCULAR)	11 dia x 1 thk	5342-00-702-1664
	9 dia x 1 thk	5342-00-702-1372
	6 dia x 1 thk	5342-00-702-1371
	5 dia x 1 thk	5342-00-527-2366
	4 dia x 1 thk	5342-00-582-2011
	3 dia x 1 thk	5342-00-582-2012
	2 dia x 1 thk	5342-00-527-2368
ZEP-C (SEMI-CIRCULAR)	7.5 r x 1 thk	5342-00-702-1665
ZBP	7.5 x 2 x 2	5342-00-526-3679
ZBS	7.5 x 2 x 2	TBD
ZDM	1.050 in dia	5342-00-682-2174
	0.825 in dia	5342-00-725-3999
	0.625 in dia	5342-00-725-3998
	0.500 in dia	5342-00-725-3997

Downloaded from http://www.everyspec.com

TABLE IV. National stock numbers – Continued.

Anode type	Size (inches)	National stock number
ZMP	4 in dia	5342-01-357-4580
	3.5 in dia	5342-01-356-6384
	3.0 in dia	5342-01-356-8260
	2.75 in dia	5342-01-356-6385
	2.5 in dia	5342-01-356-6386
	2.25 in dia	5342-01-356-6387
	2 in dia	5342-01-356-6252
	1.75 in dia	5342-01-356-6253
	1.25 in dia	5342-01-361-2565
ZRN	1.050 in dia x 72 in	5342-00-813-6056
	0.840 in dia x 36 in	5342-00-664-0531
	0.840 in dia x 72 in	5342-00-813-6055
	0.675 in dia x 72 in	5342-00-813-6054
	0.540 in dia x 36 in	5342-01-356-6381
	0.405 in dia x 72 in	5342-00-813-6053
ZPN	24 x 48 x 0.5 in	5342-00-290-3793
	24 x 48 x 1 in	5342-01-358-4414

6.4 General forms and dimensions. When material is ordered in the form of slabs, bars, discs, or rods, it is to be understood that these terms refer merely to the general form and dimensions of the material, and do not have any technical significance as to the methods of manufacture.

6.5 Sampling procedure.

6.5.1 Drilling procedure. The drilling for chemical analysis should be made with a special nonferrous drill in a clean location (used only for that purpose). The drilling bits should be kept clean of dirt, grit, and other foreign matter; kept properly sharpened; and used only for sampling purposes. After each use, the drilling bit should be immersed in a degreasing solvent and wiped dry with a clean rag. The drilling bits, when not in use, should be stored in an inhibited lubricating oil. The inhibited lubricating oil should be kept in a covered glass container provided with an air vent. The drilling bits should be wiped dry with a clean rag prior to use. Samples should be taken with a dry drill. If automatic power drilling equipment is available, a solid tungsten carbide or Tantung twist drill bit about ½ inch (12.7 millimeters) in diameter is suitable. Where a hand-held power drill is used, the samples should be taken by drilling with a solid tungsten carbide or Tantung twist drill bit about ¼ inch (6.4 millimeters) in diameter. A smaller drill bit may be used where the size of the anode does not permit using the specified diameters. The drills may be used at high speeds and feeds.

6.5.2 Machining procedure. The chips for chemical analysis should be made with a special nonferrous tool in a place which has been cleaned for that specific purpose. Instructions specified in 6.5.1 apply to the use and care of this tool.

6.6 Sub-contracted material and parts. The packaging or preparation for delivery of requirements of referenced documents listed in section 2 do not apply when material and parts are acquired by the contractor for incorporation into the equipment and lose their separate identity when the equipment is shipped.

Downloaded from http://www.everyspec.com

6.7 Subject term (key word) listing.

Corrosion

Disc

Galvanic

Plate

Rod

Slab

6.8 Amendment notations. The margins of this specification are marked with vertical lines to indicate modifications generated by this amendment. This was done as a convenience only and the Government assumes no liability whatsoever for any inaccuracies in these notations. Bidders and contractors are cautioned to evaluate the requirements of this document based on the entire content irrespective of the marginal notations.

Downloaded from http://www.everyspec.com

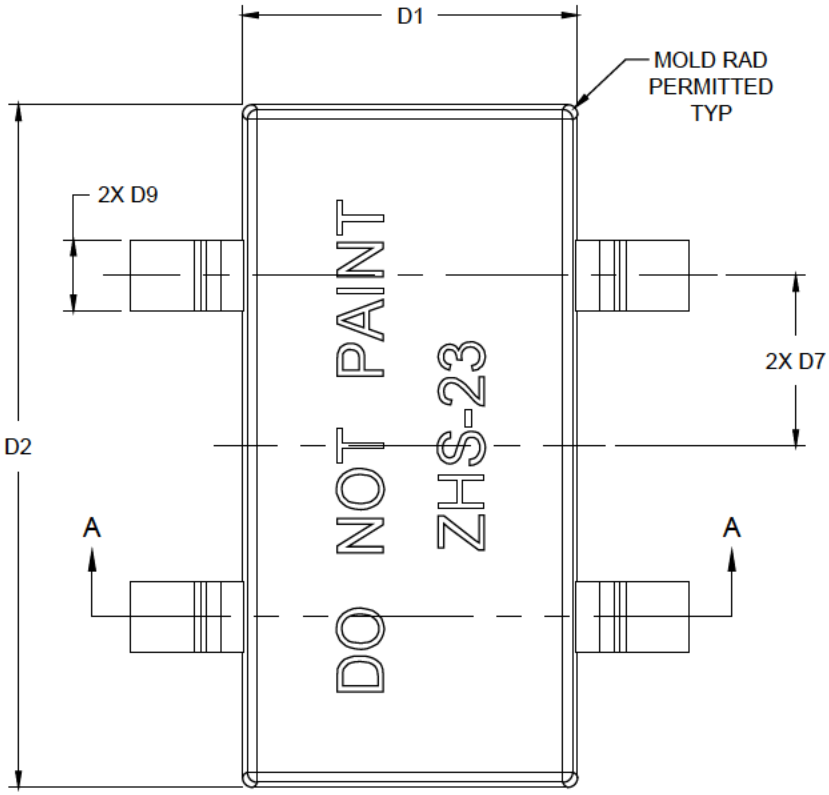

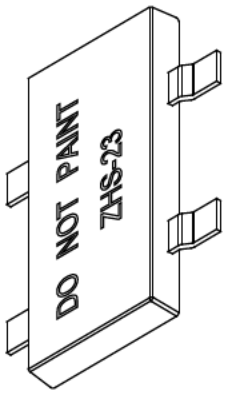

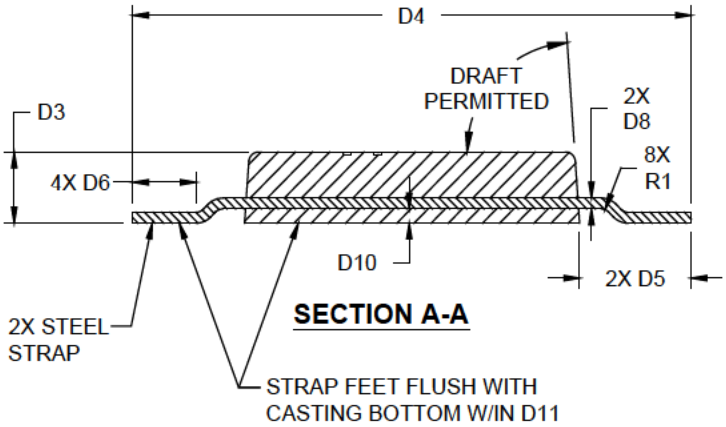

TABLE OF DIMENSIONS		
DIM	IMPERIAL (INCH)	METRIC (MM)
D1	6.00±.13	152.4±3.3
D2	12.00±.13	304.8±3.3
D3	1.25±.13	31.7±3.3
D4	10.00±.13	254±3.3
D5	2.00±.13	50.8±3.3
D6	1.13±.13	28.7±3.3
D7	3.00±.06	76.2±1.5
D8	.19±.02	4.8±.5
D9	1.25±.13	31.7±3.3
D10	.25 +.13/-.06	6.4 +3.3/-1.5
D11	±.06	±1.5
R1	.18 MIN	4.6 MIN

SKETCH A1: HULL SLAB (STEEL STRAPS), 1.25" THICK, TYPE ZHS-23/ZHB

1. MINIMUM WEIGHT = 21.5 LB / 9.7 KG
2. ANODE MAY BE CAST WITH STRAP IN THE UP OR DOWN POSITION. ALL DIMENSIONS REFER TO THE WIDER AND LONGER EDGES OF THE ANODES.

FIGURE 1. Hull slab (steel straps), type ZHS-23/ZHB.

Downloaded from http://www.everyspec.com

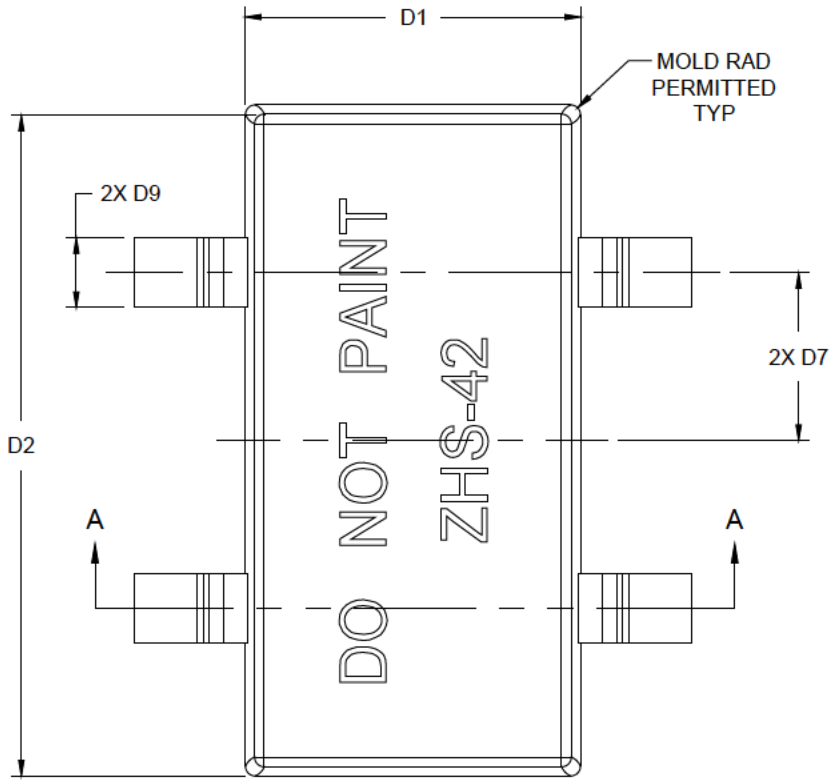

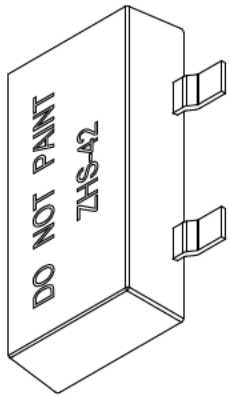

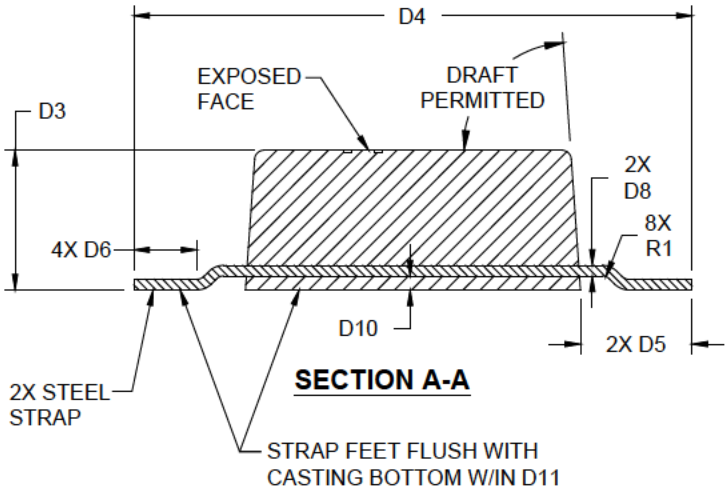

TABLE OF DIMENSIONS		
DIM	IMPERIAL (INCH)	METRIC (MM)
D1	6.00±.13	152.4±3.3
D2	12.00±.13	304.8±3.3
D3	2.50±.13	63.5±3.3
D4	10.00±.13	254±3.3
D5	2.00±.13	50.8±3.3
D6	1.13±.13	28.7±3.3
D7	3.00±.06	76.2±1.5
D8	.19±.02	4.8±.5
D9	1.25±.13	31.7±3.3
D10	.25 +.13/-.06	6.4 +3.3/-1.5
D11	±.06	±1.5
R1	.18 MIN	4.6 MIN

SKETCH A2: HULL SLAB (STEEL STRAPS), 2.50" THICK, TYPE ZHS-42

1. MINIMUM WEIGHT = 41 LB / 18.6 KG
2. ANODE MAY BE CAST WITH STRAP IN THE UP OR DOWN POSITION. ALL DIMENSIONS REFER TO THE WIDER AND LONGER EDGES OF THE ANODES.

FIGURE 2. Hull slab (steel straps), type ZHS-42.

Downloaded from http://www.everyspec.com

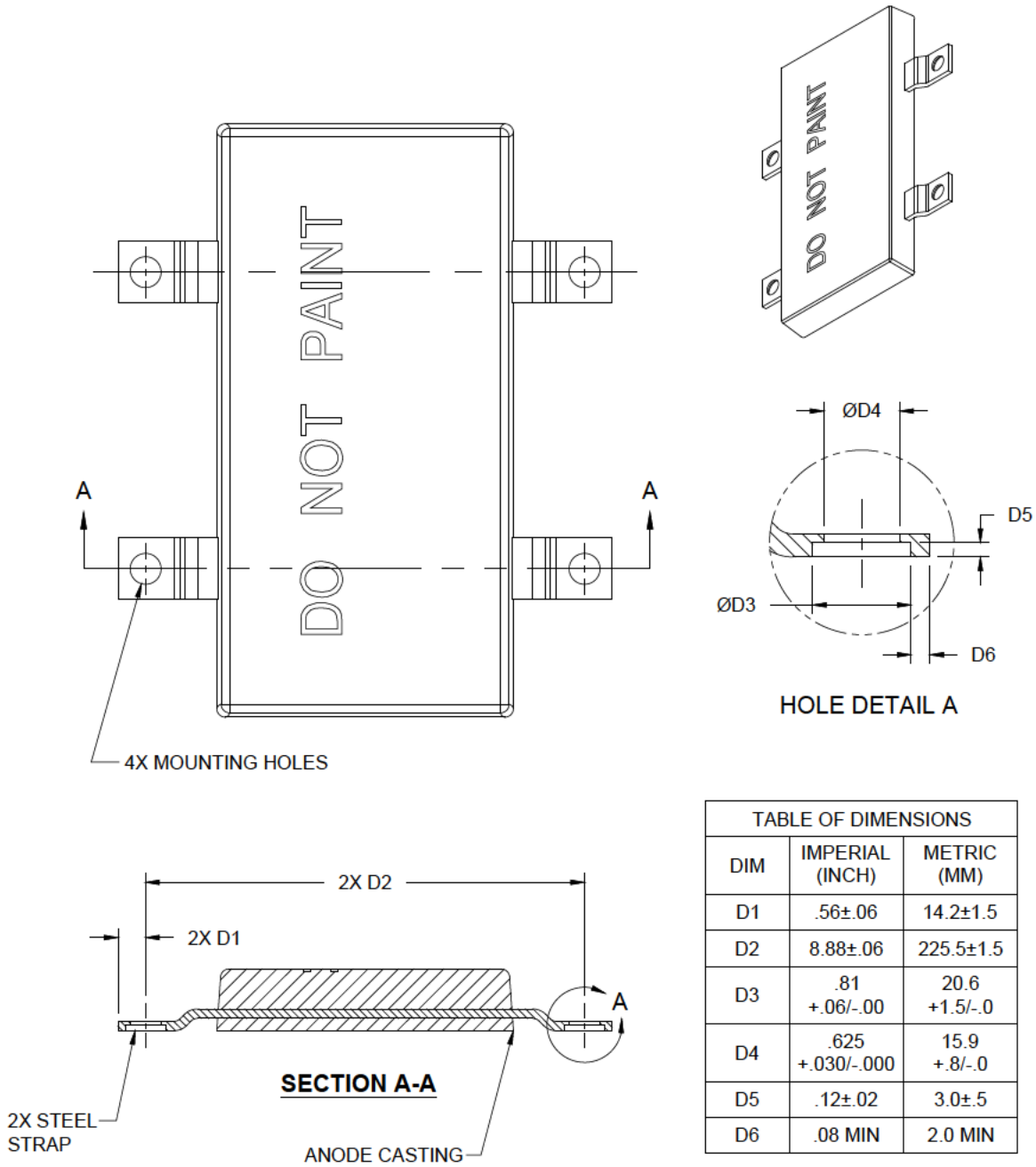

TABLE OF DIMENSIONS		
DIM	IMPERIAL (INCH)	METRIC (MM)
D1	.56±.06	14.2±1.5
D2	8.88±.06	225.5±1.5
D3	.81 +.06/-.00	20.6 +1.5/-.0
D4	.625 +.030/-.000	15.9 +.8/-.0
D5	.12±.02	3.0±.5
D6	.08 MIN	2.0 MIN

SKETCH A3: HULL SLAB (STEEL STRAPS), OPTIONAL MOUNTING HOLES WITH 90° COUNTERBORES

1. SEE SKETCH A1 OR A2 FOR OTHER ANODE DIMENSIONS.
2. MOUNTING HOLES AND COUNTERBORES SHALL ONLY BE PROVIDED WHEN SPECIFIED.

FIGURE 3. Zinc hull slab (steel straps), type ZHS with 90-degree counterbore.

Downloaded from http://www.everyspec.com

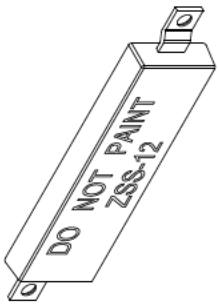

TABLE OF DIMENSIONS		
DIM	IMPERIAL (INCH)	METRIC (MM)
D1	3.00±.13	76.2±3.3
D2	12.00±.13	304.8±3.3
D3	1.25±.13	31.7±3.3
D4	16.00±.13	406.4±3.3
D5	2.00±.13	50.8±3.3
D6	1.13±.13	28.7±3.3
D7	.19±.02	4.8±.5
D8	1.25±.13	31.7±3.3
D9	.25 +.13/-.06	6.4 +3.3/-1.5
D10	.56±.06	14.2±1.5
D11	14.88±.06	378±1.5
D12	±.06	±1.5
D13	.81 +.06/-.00	20.6 +1.5/-.0
D14	.625 +.030/-.000	15.9 +.8/-.0
D15	.12±.02	3.0±.5
D16	.08 MIN	2.0 MIN
R1	.18 MIN	4.6 MIN

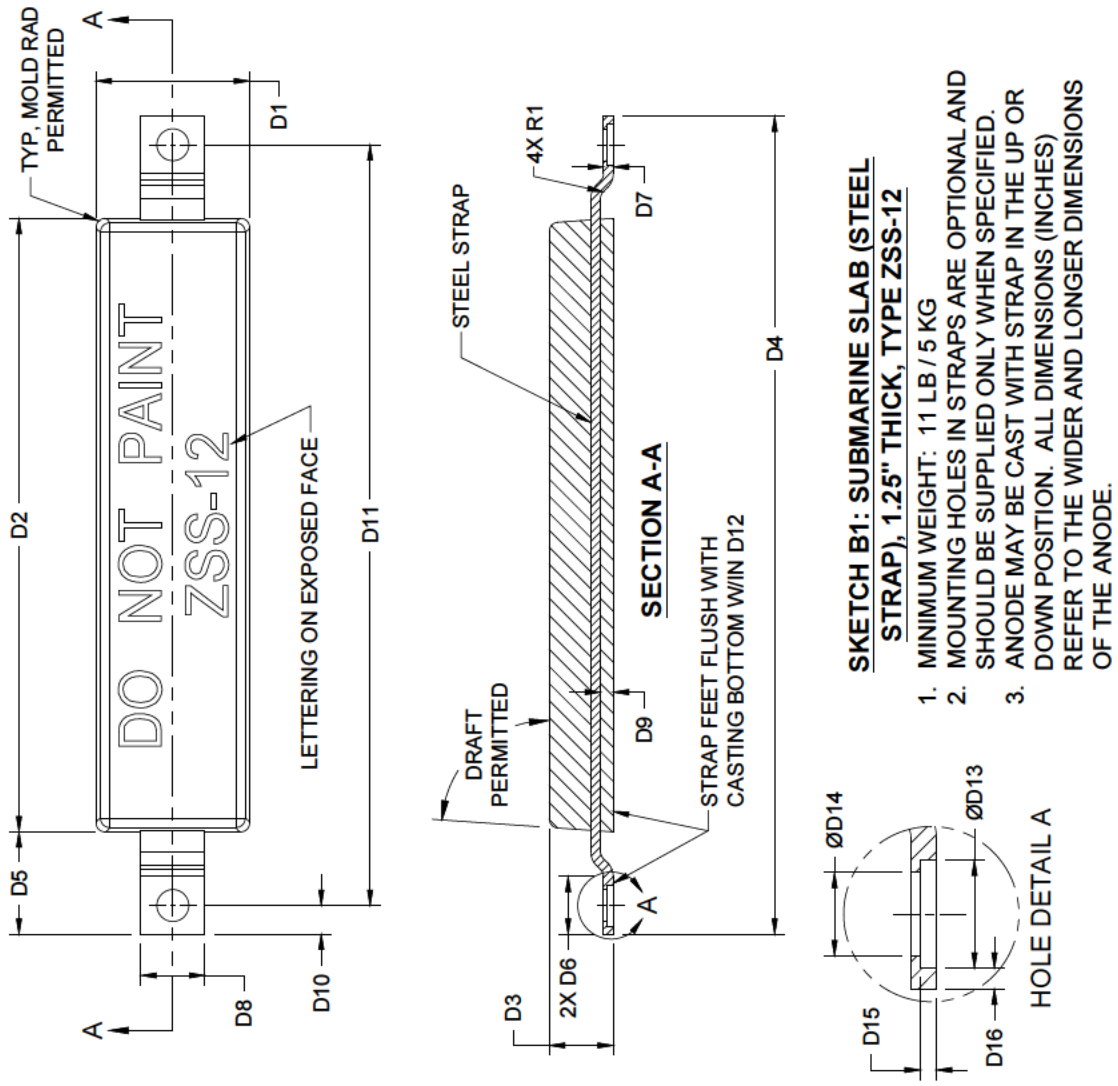

FIGURE 4. Zinc, submarine slab (steel strap), type ZSS-12.

Downloaded from http://www.everyspec.com

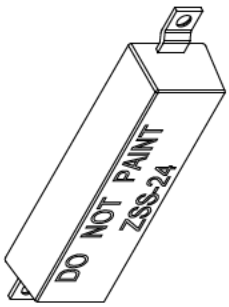

TABLE OF DIMENSIONS		
DIM	IMPERIAL (INCH)	METRIC (MM)
D1	3.50±.13	88.9±3.3
D2	12.00±.13	304.8±3.3
D3	2.50±.13	63.5±3.3
D4	16.00±.13	406.4±3.3
D5	2.00±.13	50.8±3.3
D6	1.13±.13	28.7±3.3
D7	.19±.02	4.8±.5
D8	1.25±.13	31.7±3.3
D9	.375 +.13/-.06	9.5 +3.3/-1.5
D10	.56±.06	14.2±1.5
D11	14.88±.06	378±1.5
D12	±.06	±1.5
D13	.81 +.06/-.00	20.6 +1.5/-.0
D14	.625 +.030/-.000	15.9 +.8/-.0
D15	.12±.02	3.0±.5
D16	.08 MIN	2.0 MIN
R1	.18 MIN	4.6 MIN

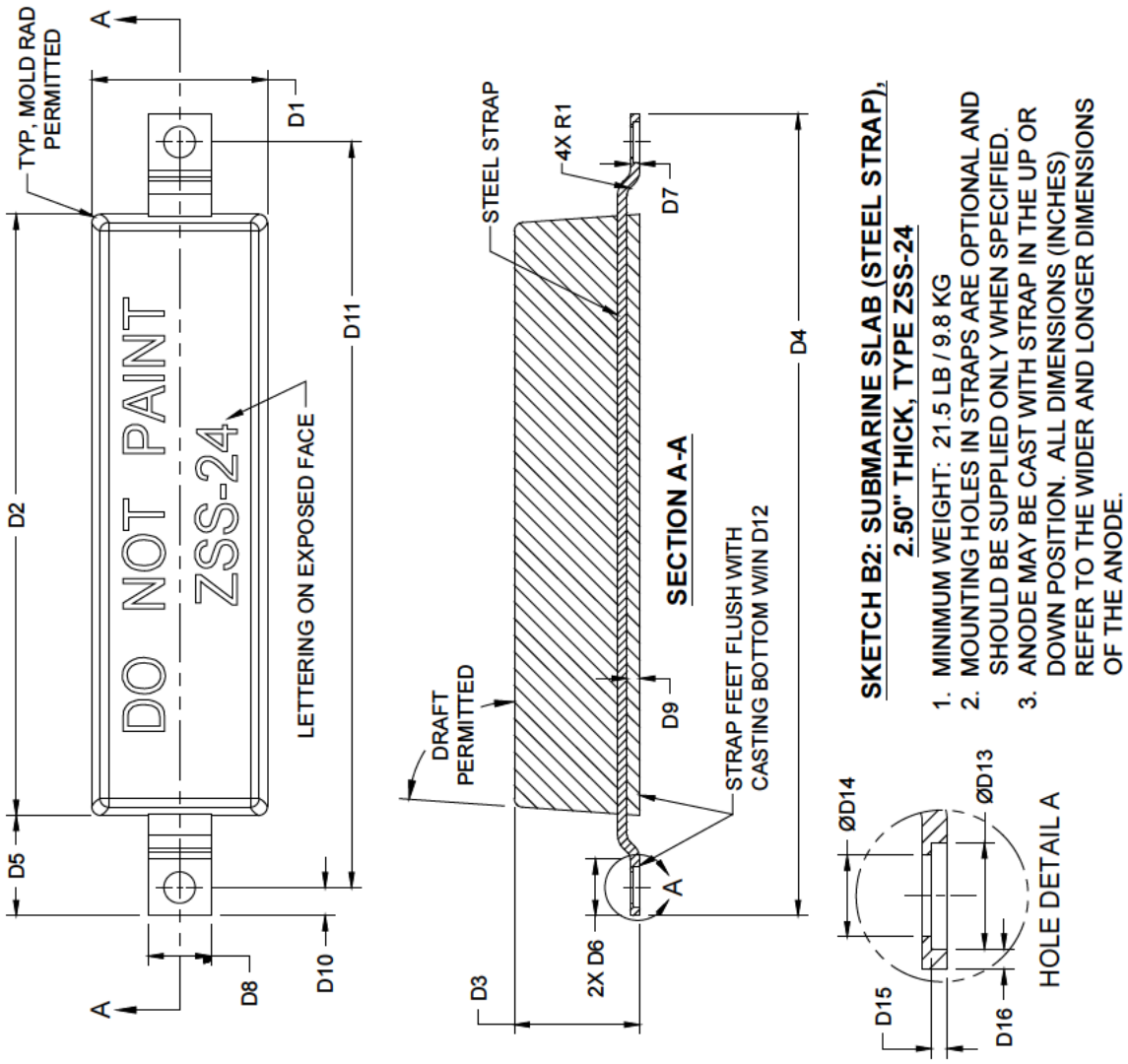

FIGURE 5. Zinc, submarine slab (steel strap), type ZSS-24.

Downloaded from http://www.everyspec.com

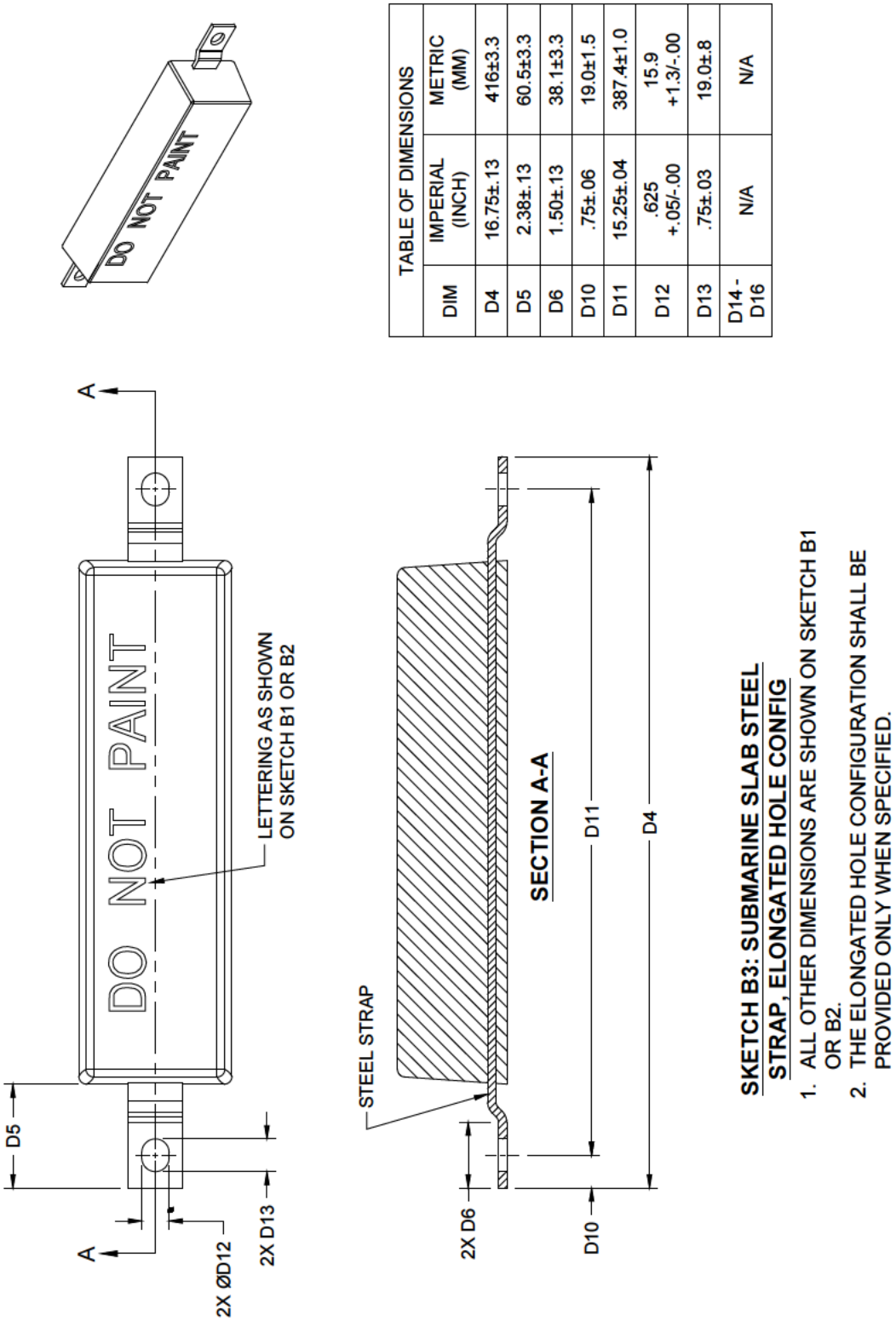

TABLE OF DIMENSIONS		
DIM	IMPERIAL (INCH)	METRIC (MM)
D4	16.75±.13	416±3.3
D5	2.38±.13	60.5±3.3
D6	1.50±.13	38.1±3.3
D10	.75±.06	19.0±1.5
D11	15.25±.04	387.4±1.0
D12	.625 +.05/-.00	15.9 +1.3/-.00
D13	.75±.03	19.0±.8
D14 - D16	N/A	N/A

FIGURE 6. Zinc, submarine slab (steel strap), type ZSS with elongated stud hole.

Downloaded from http://www.everyspec.com

CONTOUR DEFINITION POINTS (SEE NOTE 2)

	A	B	C	D	E	F	G	H	J	K	L	M	N	P	Q	R
IMPERIAL (IN)	1.11	1.43	1.50	1.46	1.35	1.17	.93	.63	1.38	1.50	1.48	1.43	1.35	1.25	1.11	.87
METRIC (MM)	28.2	36.3	38.1	37.1	34.3	29.7	23.6	16.0	35.1	38.1	37.6	36.3	34.3	31.7	28.2	22.1

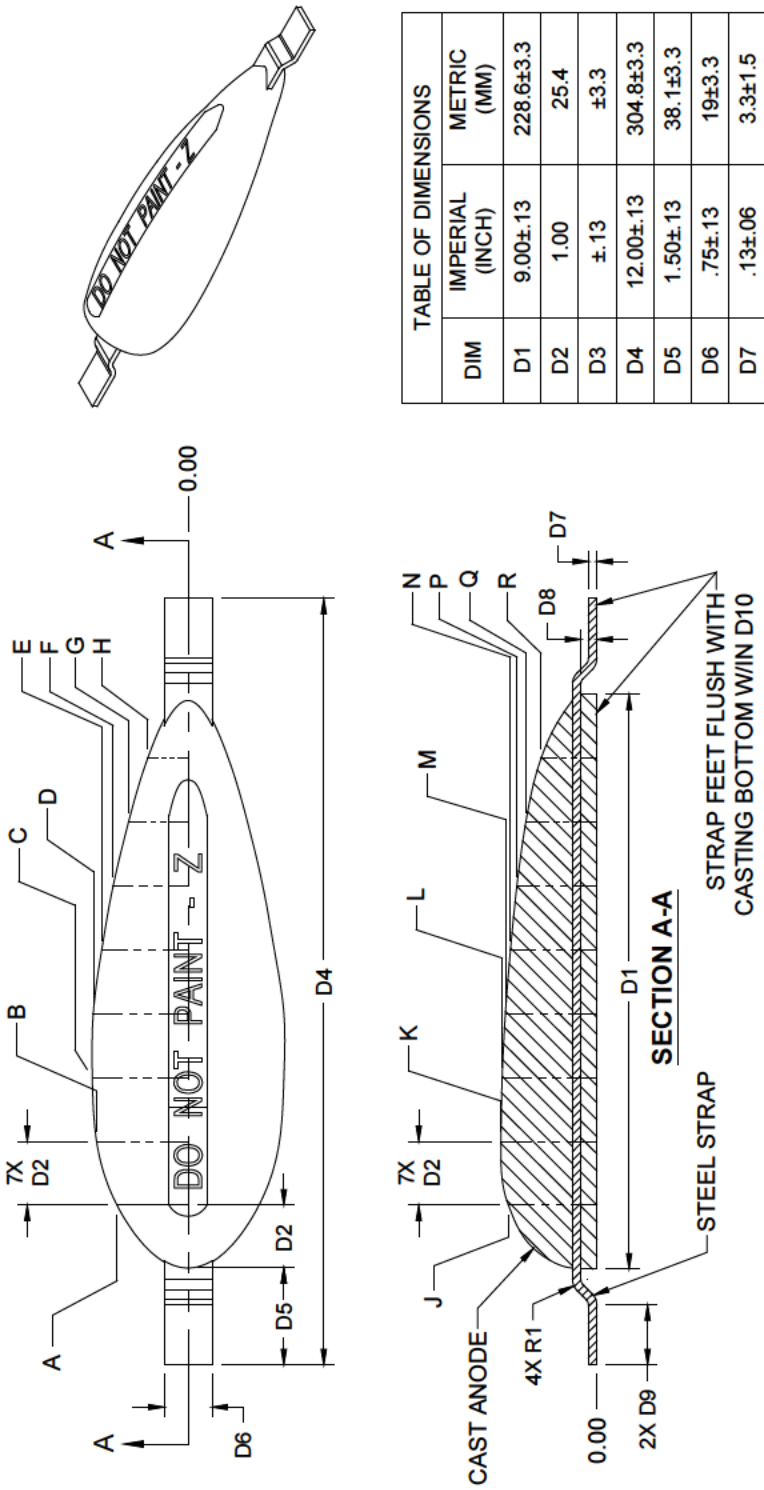

TABLE OF DIMENSIONS		
DIM	IMPERIAL (INCH)	METRIC (MM)
D1	9.00±.13	228.6±3.3
D2	1.00	25.4
D3	±.13	±3.3
D4	12.00±.13	304.8±3.3
D5	1.50±.13	38.1±3.3
D6	.75±.13	19±3.3
D7	.13±.06	3.3±1.5
D8	.25±.13	6.4±3.3
D9	.94±.13	23.9±3.3
D10	±.13	±3.3
R1	.11 MIN	2.8 MIN

SKETCH C: TEARDROP SHAPE (STEEL STRAP), TYPE ZTS

1. MINIMUM WEIGHT: 5.0 LB / 2.3 KG
2. CONTOUR TOLERANCE IS ±D3 MEASURED NORMAL TO SURFACE. CONTOUR SHALL BE HYDRODYNAMICALLY FAIR.
3. ANODE MAY BE CAST WITH EXPOSED FACE IN THE UP OR DOWN POSITION.

FIGURE 7. Zinc, teardrop (steel strap), type ZTS.

Downloaded from http://www.everyspec.com

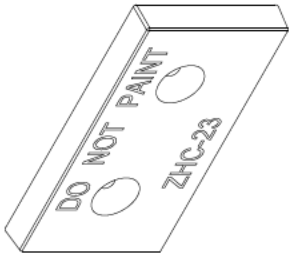

TABLE OF DIMENSIONS		
DIM	IMPERIAL (INCH)	METRIC (MM)
D1	6.00±.13	152.4±3.3
D2	12.00±.13	304.8±3.3
D3	1.25±.13	31.8±3.3
D4	8.00±.13	203.2±3.3
D5	1.50±.13	38.1±3.3
D6	2.00±.13	50.8±3.3
D7	1.00±.06	25.4±1.5
D8	.63±.13	16.0±3.3
D9	.25±.13	6.4±3.3
D10	.25 +.13/-.06	6.4 +3.3/-1.5
D11	1.00±.06	25.4±1.5
D12	2.00±.06	50.8±1.5
D13	6.00±.06	152.4±1.5
D14	1.56±.06	39.6±1.5

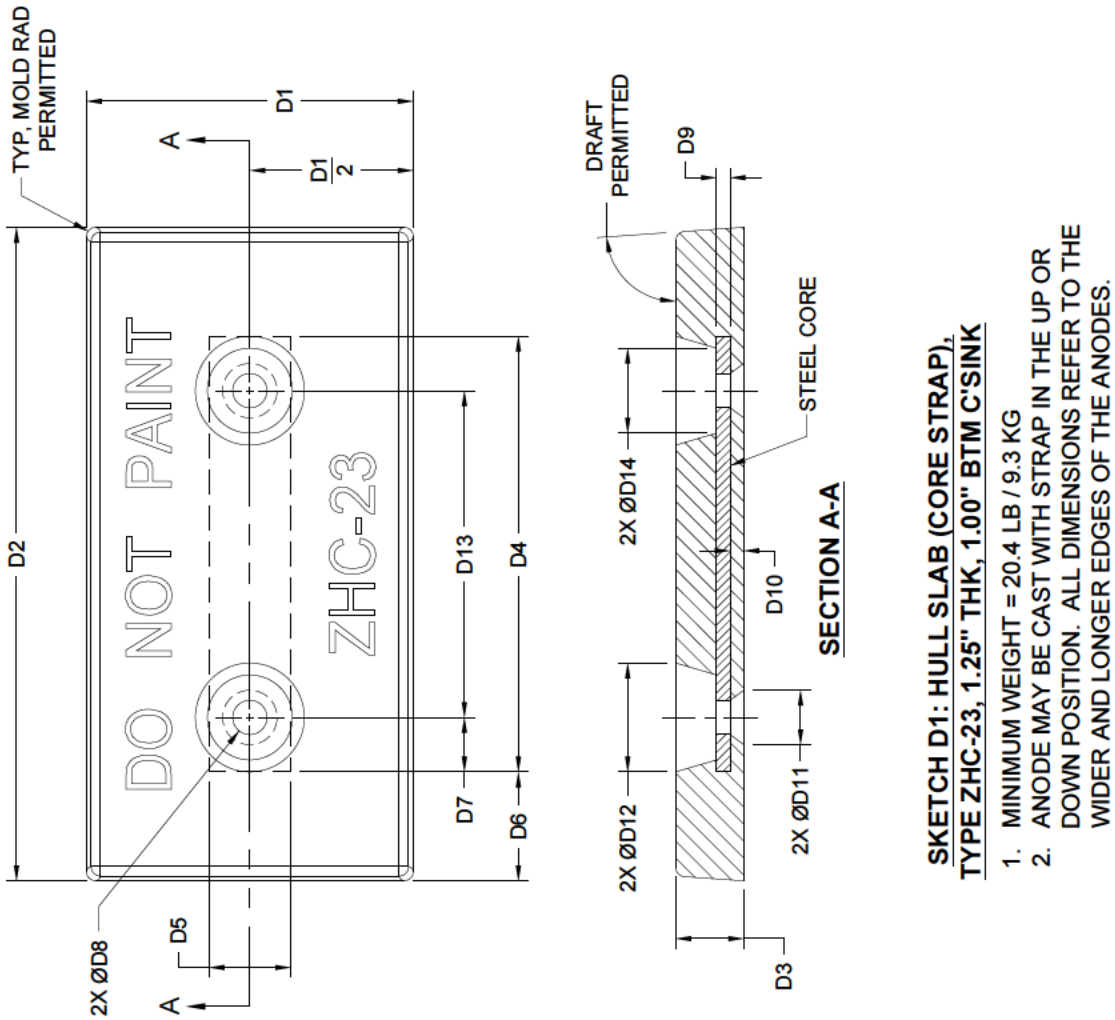

FIGURE 8. Zinc hull slab (steel strap), type ZHC-23.

Downloaded from http://www.everyspec.com

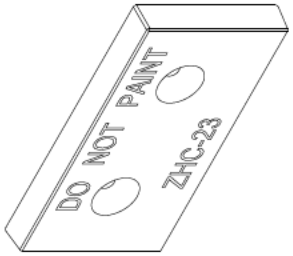

TABLE OF DIMENSIONS		
DIM	IMPERIAL (INCH)	METRIC (MM)
D1	6.00±.13	152.4±3.3
D2	12.00±.13	304.8±3.3
D3	1.25±.13	31.8±3.3
D4	8.00±.13	203.2±3.3
D5	1.50±.13	38.1±3.3
D6	2.00±.13	50.8±3.3
D7	1.00±.06	25.4±1.5
D8	.63±.13	16.0±3.3
D9	.25±.13	6.4±3.3
D10	.25 +.13/-.06	6.4 +3.3/-1.5
D11	1.50±.13	38.1±3.3
D12	2.00±.06	50.8±1.5
D13	6.00±.06	152.4±1.5
D14	1.56±.06	39.6±1.5
D15	1.38±.06	35.0±1.5

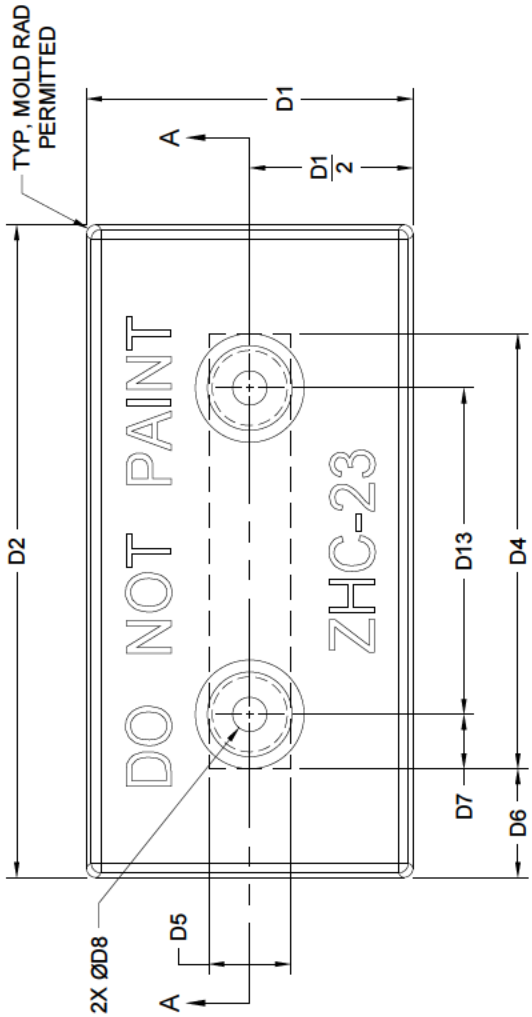

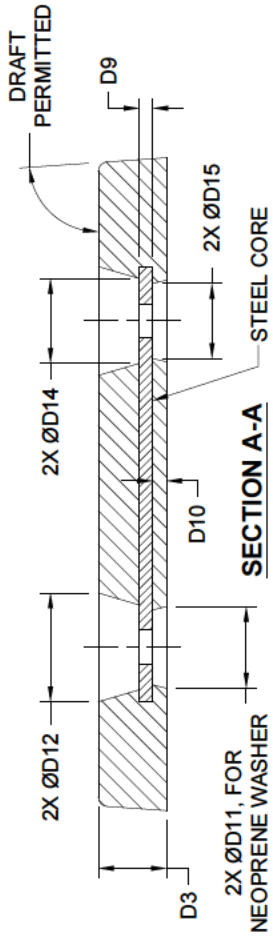

SKETCH D2: HULL SLAB (STEEL CORE), TYPE ZHC-23, 1.25" THK, 1.50" BTM C'SINK

1. MINIMUM WEIGHT = 20.4 LB / 9.3 KG
2. ANODE MAY BE CAST WITH STRAP IN THE UP OR DOWN POSITION.

FIGURE 9. Hull slab (steel core), type ZHC-23 with countersink for neoprene washer.

Downloaded from http://www.everyspec.com

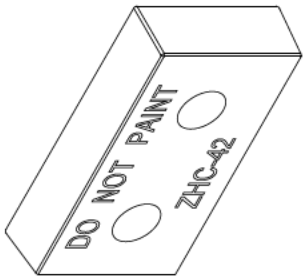

TABLE OF DIMENSIONS		
DIM	IMPERIAL (INCH)	METRIC (MM)
D1	6.00±.13	152.4±3.3
D2	12.00±.13	304.8±3.3
D3	2.50±.13	63.5±3.3
D4	8.00±.13	203.2±3.3
D5	1.50±.13	38.1±3.3
D6	2.00±.13	50.8±3.3
D7	1.00±.06	25.4±1.5
D8	.63±.13	16.0±3.3
D9	.25±.13	6.4±3.3
D10	.25 +.13/-.06	6.4 +3.3/-1.5
D11	1.00±.06	25.4±1.5
D12	2.00±.06	50.8±1.5
D13	6.00±.06	152.4±1.5
D14	1.56±.06	39.6±1.5

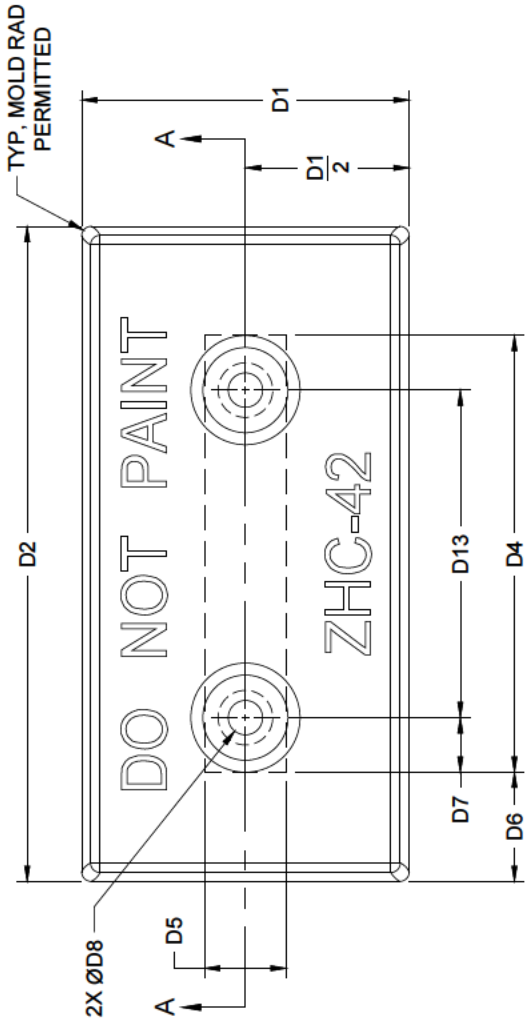

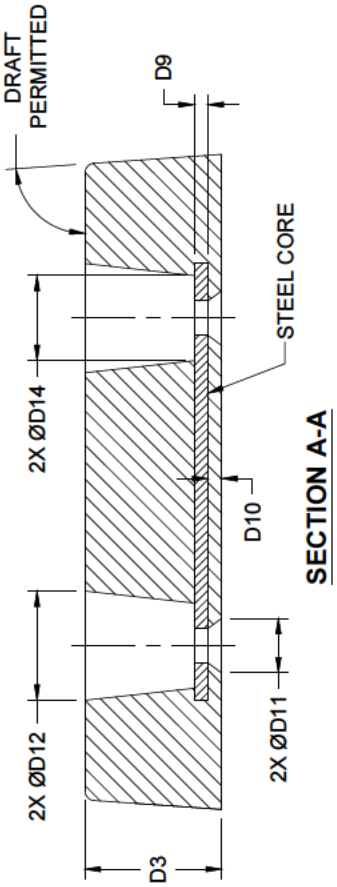

SECTION A-A

SKETCH D3: HULL SLAB (STEEL CORE), TYPE ZHC-42, 2.50" THICK, 1.00" BTM C'SINK

1. MINIMUM WEIGHT = 39 LB / 17.7 KG
2. ANODE MAY BE CAST WITH EXPOSED FACE IN THE UP OR DOWN POSITION.

FIGURE 10. Zinc, hull slab (steel core), type ZHC-42.

Downloaded from http://www.everyspec.com

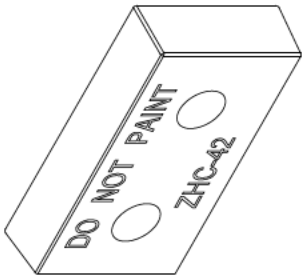

TABLE OF DIMENSIONS		
DIM	IMPERIAL (INCH)	METRIC (MM)
D1	6.00±.13	152.4±3.3
D2	12.00±.13	304.8±3.3
D3	2.50±.13	63.5±3.3
D4	8.00±.13	203.2±3.3
D5	1.50±.13	38.1±3.3
D6	2.00±.13	50.8±3.3
D7	1.00±.06	25.4±1.5
D8	.63±.13	16.0±3.3
D9	.25±.13	6.4±3.3
D10	.25 +.13/-.06	6.4 +3.3/-1.5
D11	1.50±.13	38.1±3.3
D12	2.00±.06	50.8±1.5
D13	6.00±.06	152.4±1.5
D14	1.56±.06	39.6±1.5
D15	1.38±.06	35.0±1.5

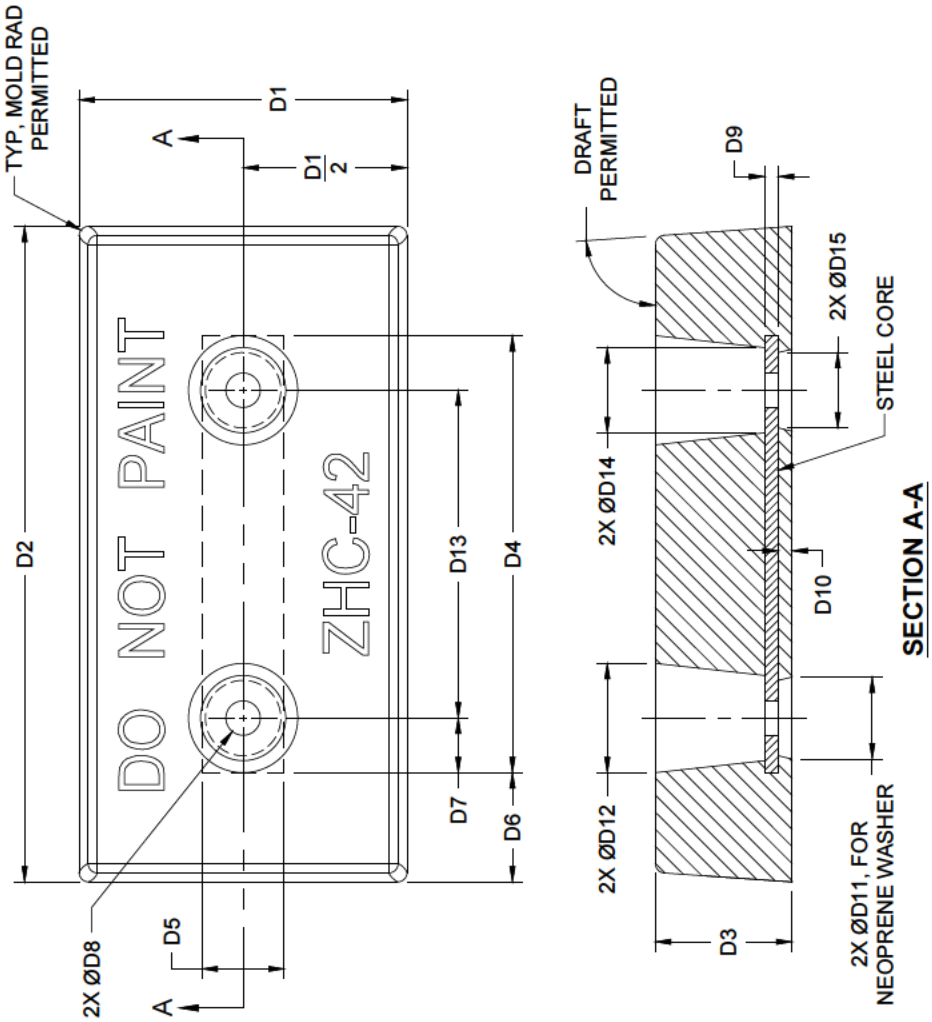

SKETCH D4: HULL SLAB (STEEL CORE), TYPE ZHC-42, 2.50" THICK, 1.50" BTM C'SINK

1. MINIMUM WEIGHT = 39 LB / 17.7 KG
2. ANODE MAY BE CAST WITH STRAP IN THE UP OR DOWN POSITION.

FIGURE 11. Zinc, hull slab (steel core), type ZHC-42 with countersink for neoprene washer.

Downloaded from http://www.everyspec.com

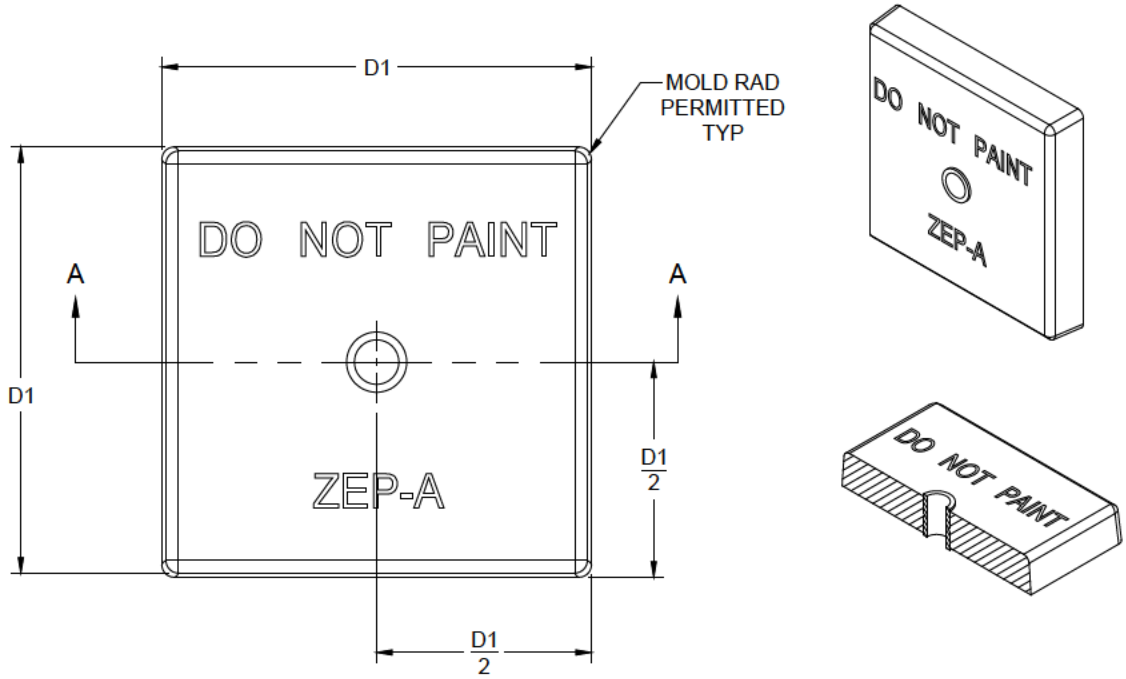

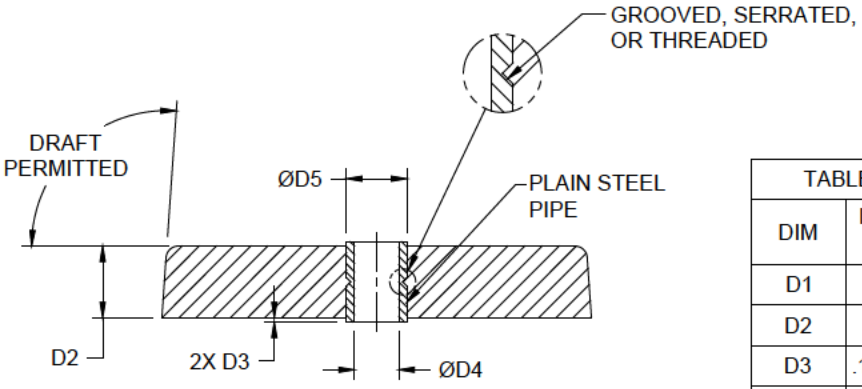

SECTION A-A

TABLE OF DIMENSIONS		
DIM	IMPERIAL (INCH)	METRIC (MM)
D1	6.00±.13	152.4±3.3
D2	1.00±.13	25.4±3.3
D3	.13+.06/-0.0	3.3+1.5/-0.0
D4*	.62±.02	15.7±.5
D5*	.84±.02	21.3±.5

* CORRESPONDS TO ASTM A524 1/2" SCHED 40 OR BS EN 10305-1 22MM STEEL PIPE SIZES.

SKETCH E1: FAIRWATER SLAB,
STYLE A (PIPE CORE), TYPE ZEP, 1.00" THICK
MINIMUM WEIGHT = 8.6 LB / 3.9 KG

FIGURE 12. Zinc, fairwater slab, pipe core (style A), type ZEP (1" thick).

Downloaded from http://www.everyspec.com

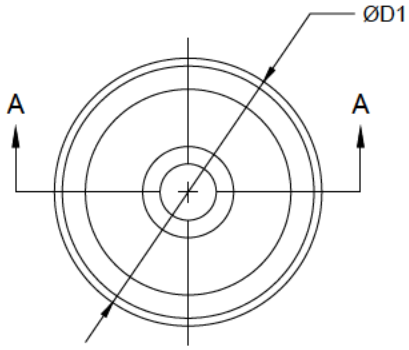

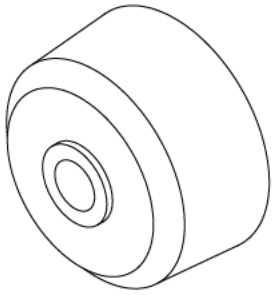

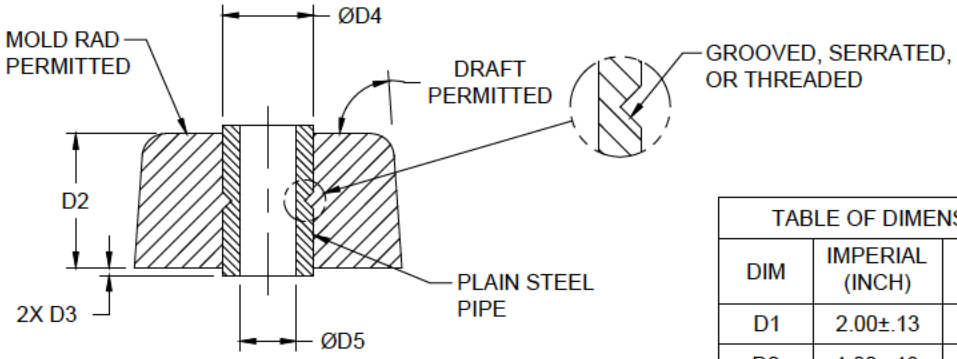

SECTION A-A

TABLE OF DIMENSIONS		
DIM	IMPERIAL (INCH)	METRIC (MM)
D1	2.00±.13	50.8±3.3
D2	1.00±.13	25.4±3.3
D3	.13+.06/-0.0	3.3+1.5/-0.0
D4*	.68±.02	17.3±.5
D5*	.42±.02	10.7±.5
D4**	.84±.02	21.3±.5
D5**	.62±.02	15.7±.5

* CORRESPONDS TO ASTM A524 3/8" SCHED 80 OR BS EN 10305-1 18MM STEEL PIPE SIZES.
** CORRESPONDS TO ASTM A524 1/2" SCHED 40 OR BS EN 10305-1 22MM STEEL PIPE SIZES.

SKETCH F1: FAIRWATER SLAB, STYLE B, 2.0" DIAM (PIPE CORE), TYPE ZEP, 1.00" THICK
MINIMUM WEIGHT = 0.6 LB / 0.27 KG

FIGURE 13. Zinc, fairwater slab, pipe core (style B), type ZEP (2" diameter, 1" thick).

Downloaded from http://www.everyspec.com

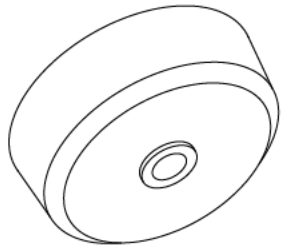

TABLE OF DIMENSIONS		
DIM	IMPERIAL (INCH)	METRIC (MM)
D1	3.00±.13	76.2±3.3
D2	1.00±.13	25.4±3.3
D3	.13+.06/-0.0	3.3+1.5/-0.0
D4*	.68±.02	17.3±.5
D5*	.42±.02	10.7±.5
D4**	.84±.02	21.3±.5
D5**	.62±.02	15.7±.5

* CORRESPONDS TO ASTM A524
3/8" SCHED 80 OR BS EN 10305-1
18MM STEEL PIPE SIZES.
** CORRESPONDS TO ASTM A524
1/2" SCHED 40 OR BS EN 10305-1
22MM STEEL PIPE SIZES.

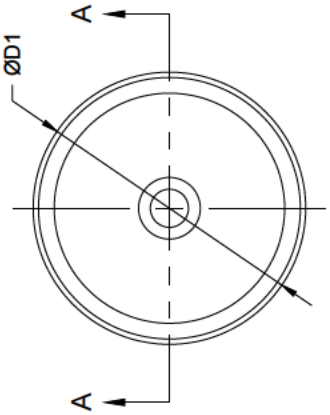

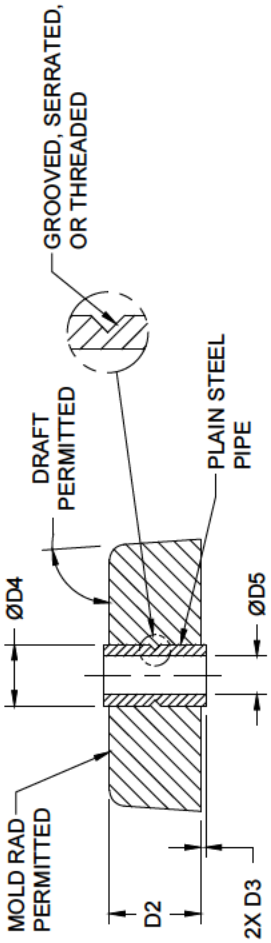

SECTION A-A

SKETCH F2: FAIRWATER SLAB, STYLE B, 3.00" DIAM (PIPE CORE), TYPE ZEP, 1.00" THICK
MINIMUM WEIGHT = 1.6 LB / 0.73 KG

FIGURE 14. Zinc, fairwater slab, pipe core (style B), type ZEP (3" diameter, 1" thick).

Downloaded from http://www.everyspec.com

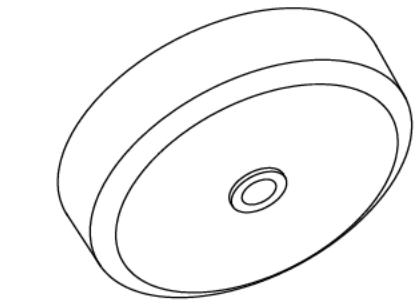

TABLE OF DIMENSIONS		
DIM	IMPERIAL (INCH)	METRIC (MM)
D1	4.00±.13	101.6±3.3
D2	1.00±.13	25.4±3.3
D3	.13+.06/-0.0	3.3+1.5/-0.0
D4*	.68±.02	17.3±.5
D5*	.42±.02	10.7±.5
D4**	.84±.02	21.3±.5
D5**	.62±.02	15.7±.5

* CORRESPONDS TO ASTM A524
3/8" SCHED 80 OR BS EN 10305-1
18MM STEEL PIPE SIZES.
** CORRESPONDS TO ASTM A524
1/2" SCHED 40 OR BS EN 10305-1
22MM STEEL PIPE SIZES.

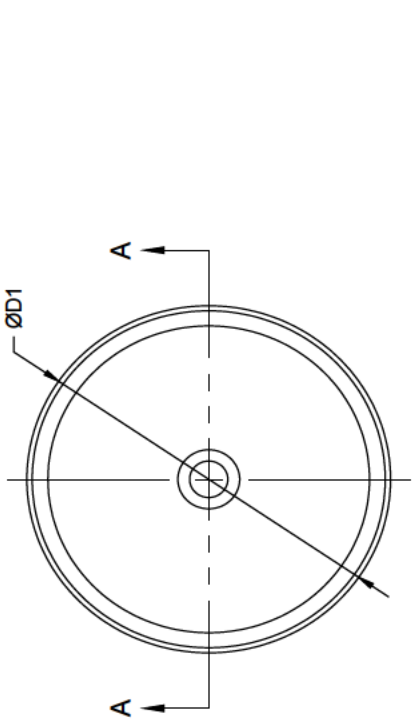

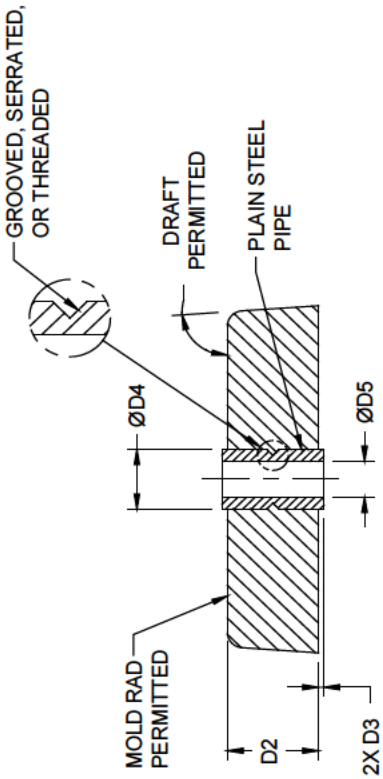

SECTION A-A

SKETCH F3: FAIRWATER SLAB, STYLE B, 4.00" DIAM (PIPE CORE), TYPE ZEP, 1.00" THICK
MINIMUM WEIGHT = 2.9 LB / 1.32 KG

FIGURE 15. Zinc, fairwater slab, pipe core (style B), type ZEP (4" diameter, 1" thick).

Downloaded from http://www.everyspec.com

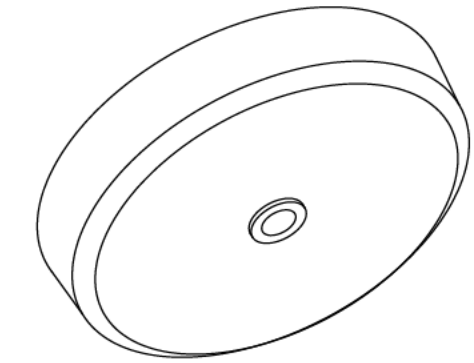

TABLE OF DIMENSIONS		
DIM	IMPERIAL (INCH)	METRIC (MM)
D1	5.00±.13	127±3.3
D2	1.00±.13	25.4±3.3
D3	.13+.06/-0.0	3.3+1.5/-0.0
D4*	.68±.02	17.3±.5
D5*	.42±.02	10.7±.5
D4**	.84±.02	21.3±.5
D5**	.62±.02	15.7±.5

* CORRESPONDS TO ASTM A524
3/8" SCHED 80 OR BS EN 10305-1
18MM STEEL PIPE SIZES.
** CORRESPONDS TO ASTM A524
1/2" SCHED 40 OR BS EN 10305-1
22MM STEEL PIPE SIZES.

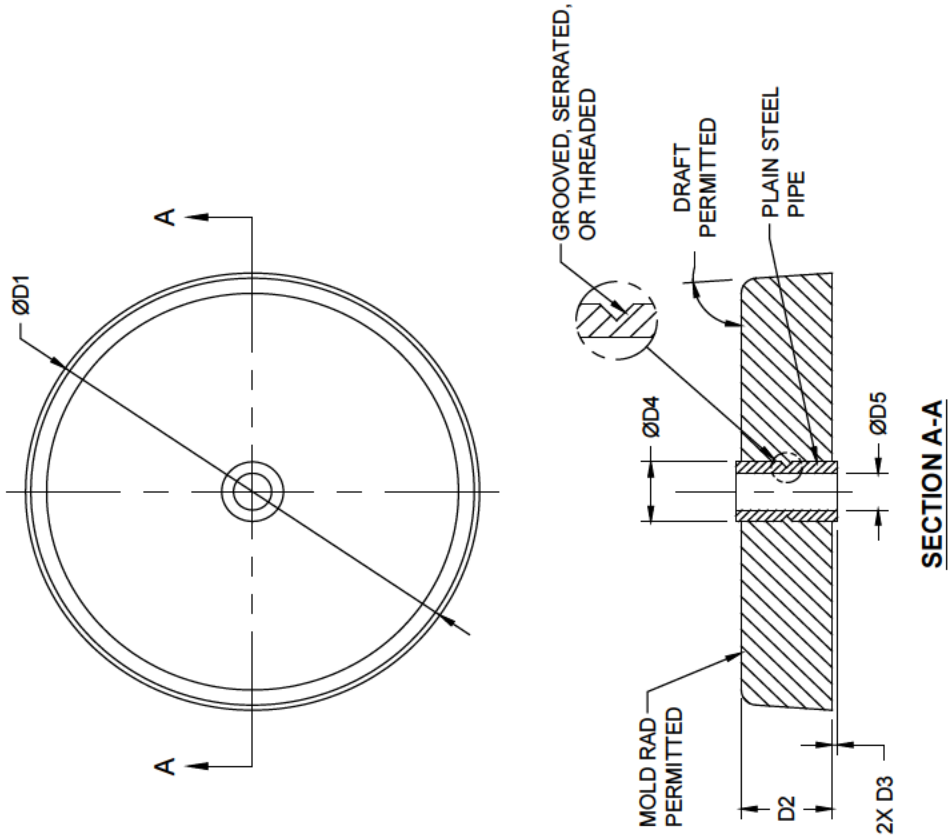

SKETCH F4: FAIRWATER SLAB, STYLE B,
5.00" DIAM (PIPE CORE), TYPE ZEP, 1.00" THICK
MINIMUM WEIGHT = 4.6 LB / 2.09 KG

FIGURE 16. Zinc, fairwater slab, pipe core (style B), type ZEP (5" diameter, 1" thick).

Downloaded from http://www.everyspec.com

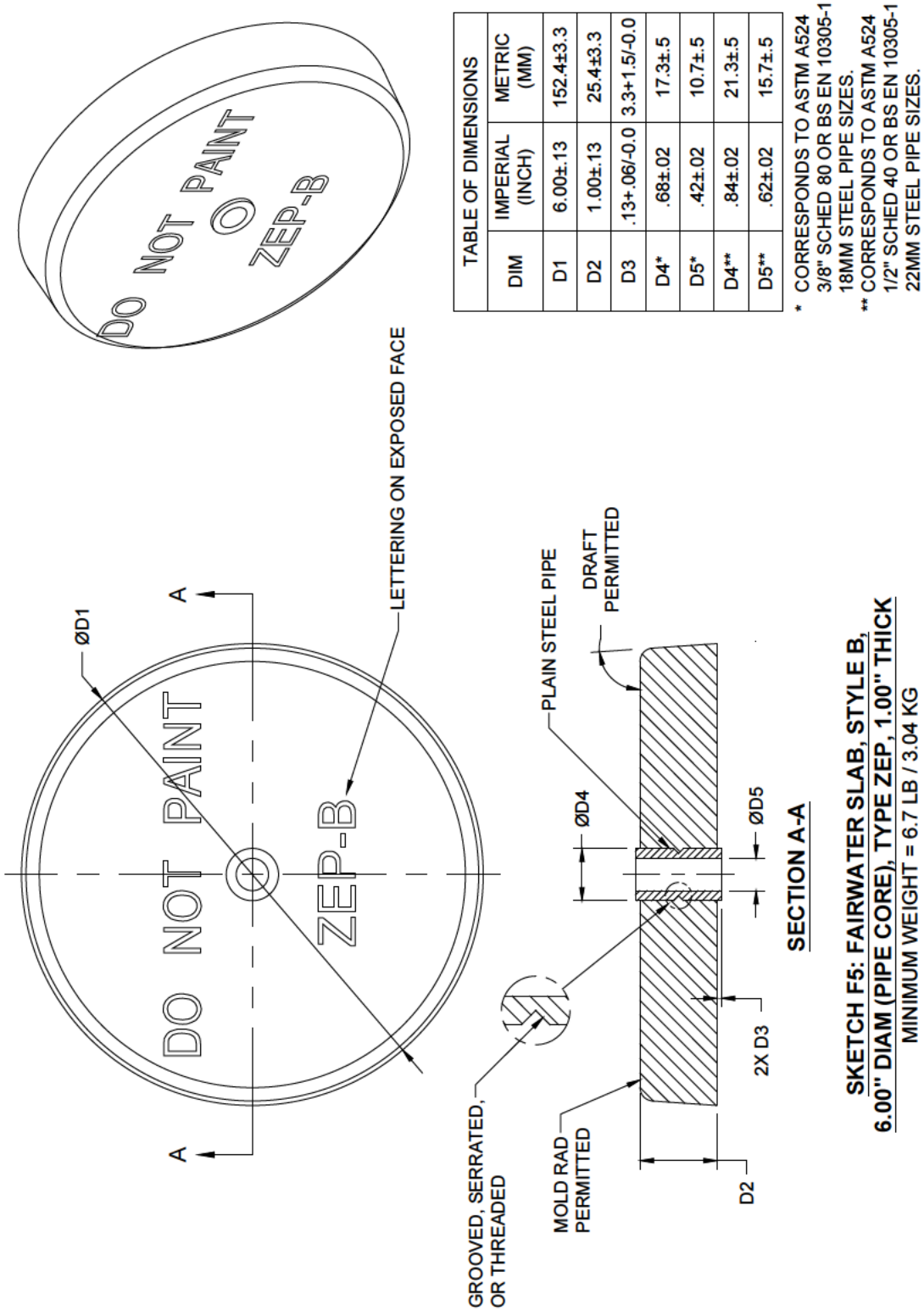

TABLE OF DIMENSIONS		
DIM	IMPERIAL (INCH)	METRIC (MM)
D1	6.00±.13	152.4±3.3
D2	1.00±.13	25.4±3.3
D3	.13+.06/-0.0	3.3+1.5/-0.0
D4*	.68±.02	17.3±.5
D5*	.42±.02	10.7±.5
D4**	.84±.02	21.3±.5
D5**	.62±.02	15.7±.5

* CORRESPONDS TO ASTM A524 3/8" SCHED 80 OR BS EN 10305-1 18MM STEEL PIPE SIZES.
** CORRESPONDS TO ASTM A524 1/2" SCHED 40 OR BS EN 10305-1 22MM STEEL PIPE SIZES.

FIGURE 17. Zinc, fairwater slab, pipe core (style B), type ZEP (6" diameter, 1" thick).

Downloaded from http://www.everyspec.com

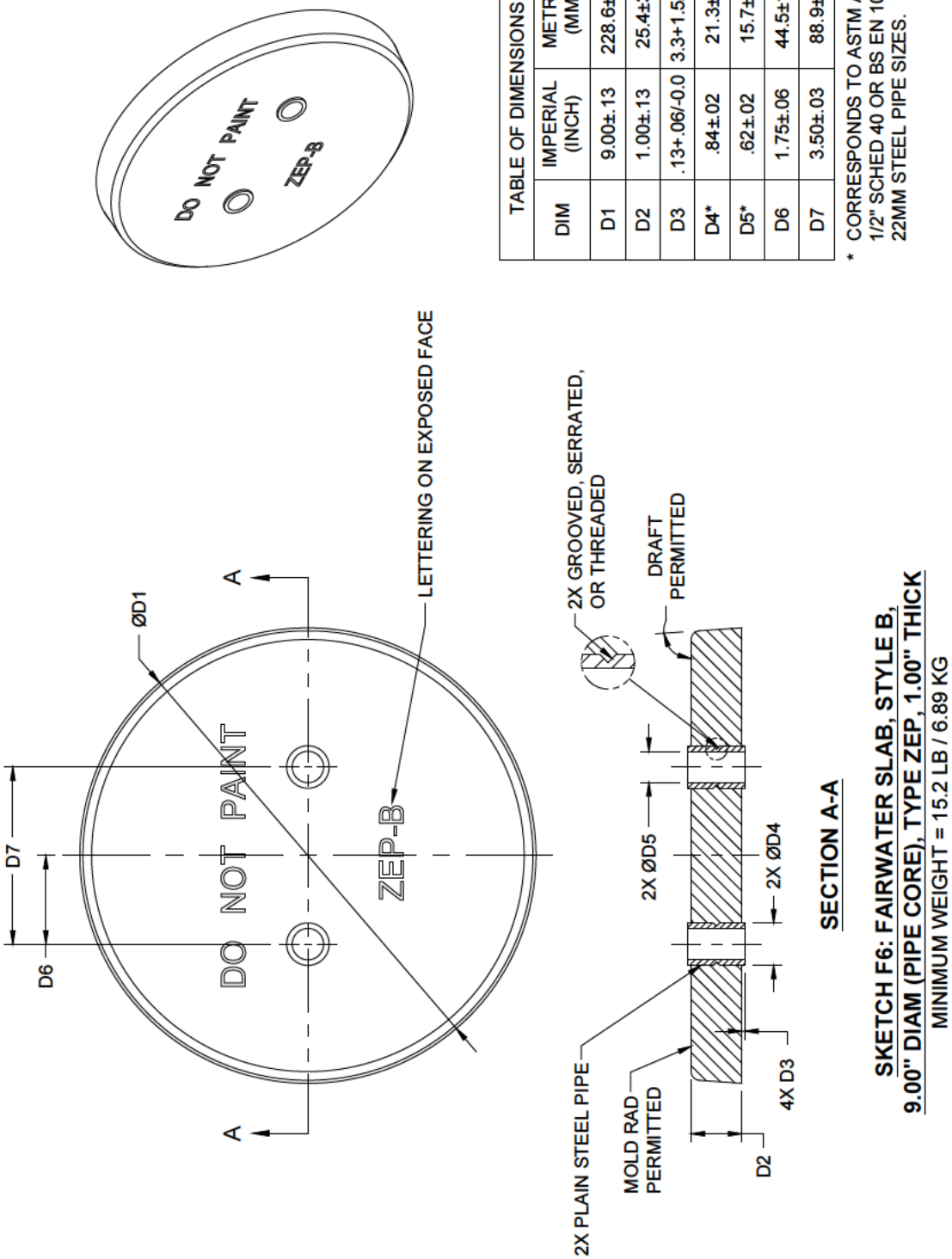

TABLE OF DIMENSIONS		
DIM	IMPERIAL (INCH)	METRIC (MM)
D1	9.00±.13	228.6±3.3
D2	1.00±.13	25.4±3.3
D3	.13+.06/-0.0	3.3+1.5/-0.0
D4*	.84±.02	21.3±.5
D5*	.62±.02	15.7±.5
D6	1.75±.06	44.5±1.5
D7	3.50±.03	88.9±.8

* CORRESPONDS TO ASTM A524 1/2" SCHED 40 OR BS EN 10305-1 22MM STEEL PIPE SIZES.

FIGURE 18. Zinc, fairwater slab, pipe core (style B), type ZEP (9" diameter, 1" thick).

Downloaded from http://www.everyspec.com

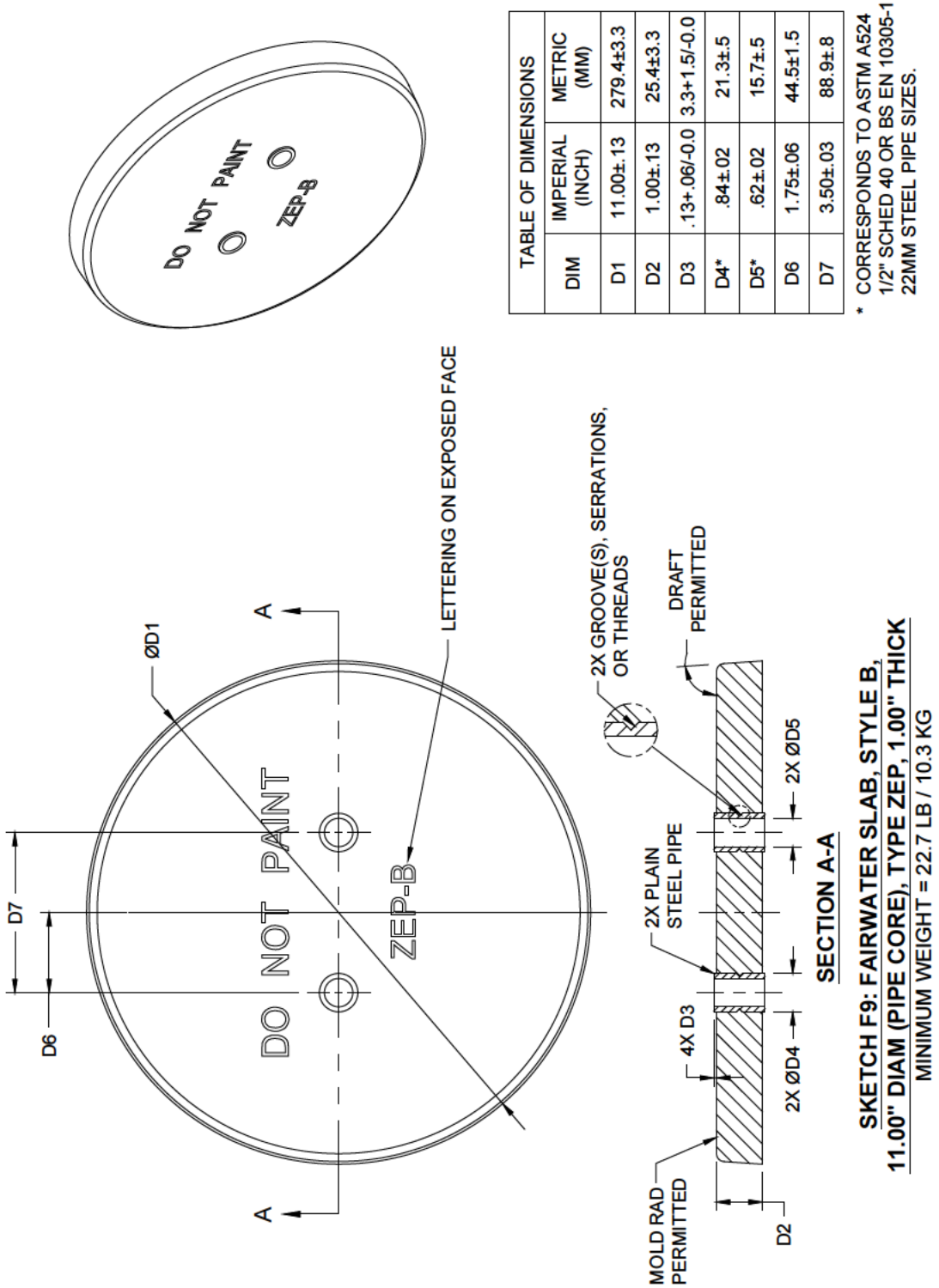

TABLE OF DIMENSIONS		
DIM	IMPERIAL (INCH)	METRIC (MM)
D1	11.00±.13	279.4±3.3
D2	1.00±.13	25.4±3.3
D3	.13+.06/-0.0	3.3+1.5/-0.0
D4*	.84±.02	21.3±.5
D5*	.62±.02	15.7±.5
D6	1.75±.06	44.5±1.5
D7	3.50±.03	88.9±.8

* CORRESPONDS TO ASTM A524 1/2" SCHED 40 OR BS EN 10305-1 22MM STEEL PIPE SIZES.

FIGURE 19. Zinc, fairwater slab, pipe core (style B), type ZEP (11" diameter, 1" thick).

Downloaded from http://www.everyspec.com

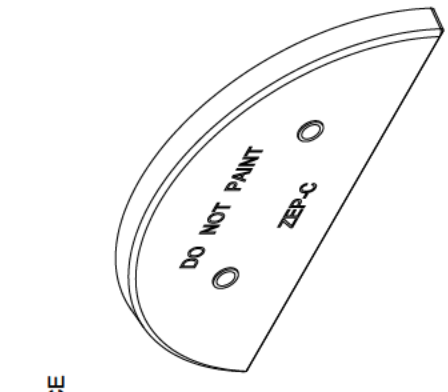

TABLE OF DIMENSIONS		
DIM	IMPERIAL (INCH)	METRIC (MM)
D1	.13±.06	3.3±1.5
D2	1.00±.13	25.4±3.3
D3	3.06±.06	77.7±1.5
D4	3.19±.06	81.0±1.5
D5	6.375±.016	161.9±.4
D6*	.62±.02	15.7±.5
D7*	.84±.02	21.3±.5
D8	.13+.06/-0.0	3.3+1.5/-0.0
R1	7.50±.12	190.5±3

* CORRESPONDS TO ASTM A524 1/2" SCHED 40 OR BS EN 10305-1 22MM STEEL PIPE SIZES.

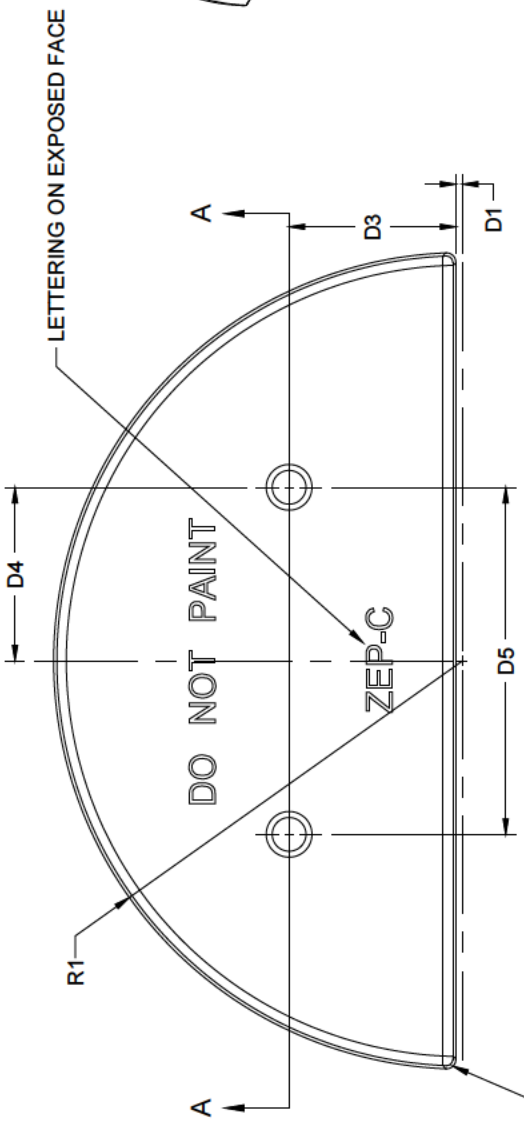

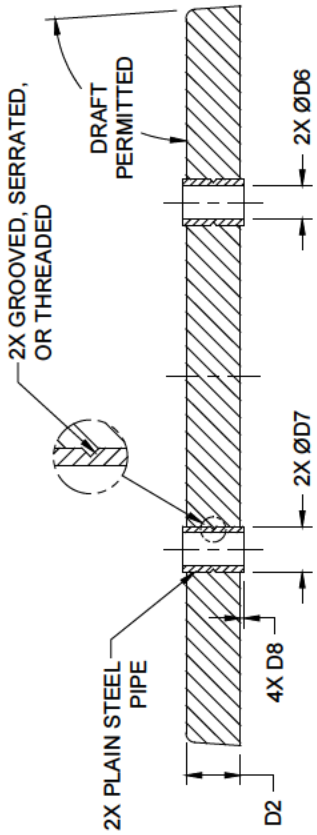

SECTION A-A

SKETCH G: FAIRWATER SLAB, STYLE C (PIPE CORE), TYPE ZEP
MINIMUM WEIGHT = 21.3 LB / 9.66 KG

FIGURE 20. Zinc, fairwater slab, pipe core (style C), type ZEP.

Downloaded from http://www.everyspec.com

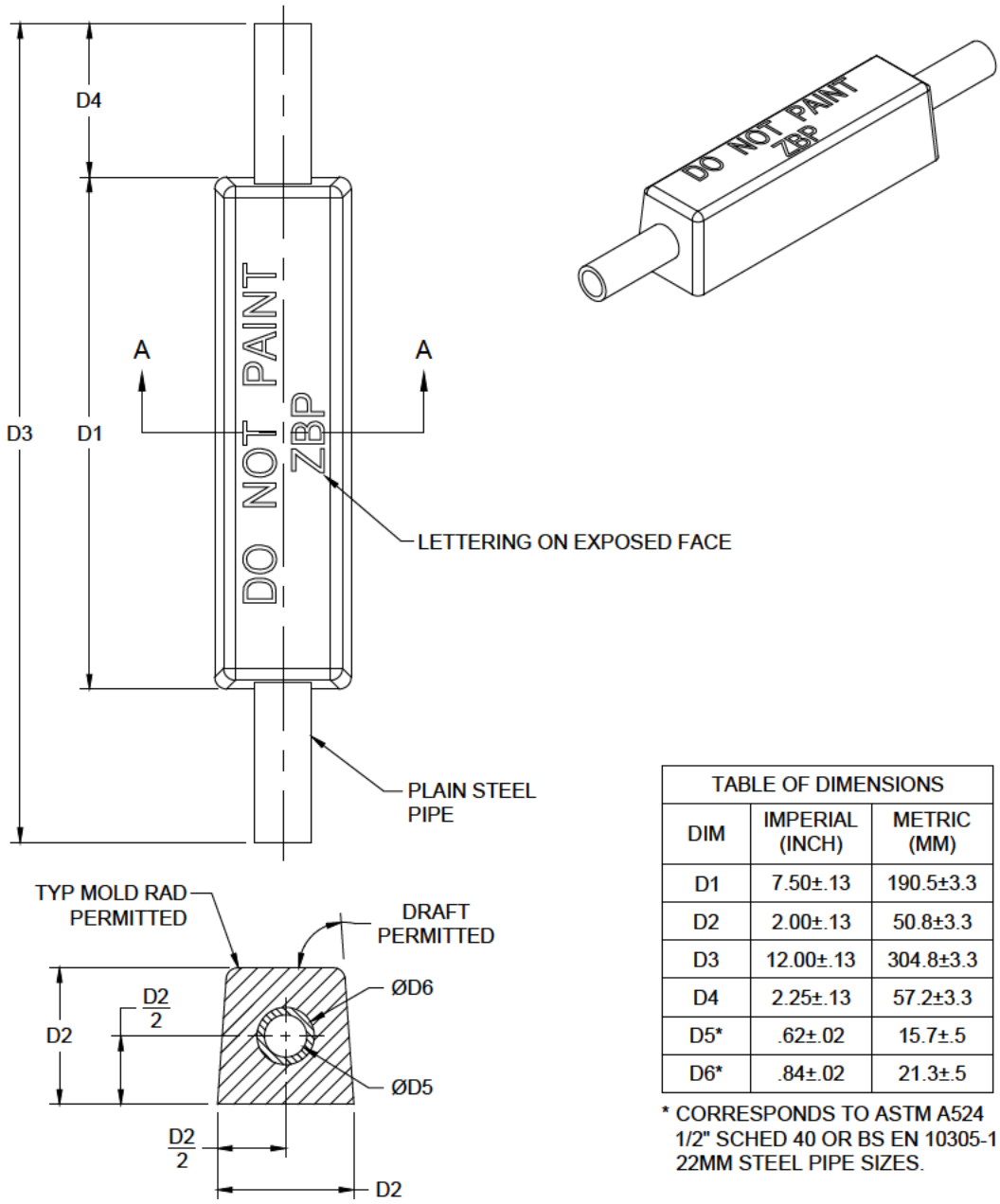

TABLE OF DIMENSIONS		
DIM	IMPERIAL (INCH)	METRIC (MM)
D1	7.50±.13	190.5±3.3
D2	2.00±.13	50.8±3.3
D3	12.00±.13	304.8±3.3
D4	2.25±.13	57.2±3.3
D5*	.62±.02	15.7±.5
D6*	.84±.02	21.3±.5

* CORRESPONDS TO ASTM A524 1/2" SCHED 40 OR BS EN 10305-1 22MM STEEL PIPE SIZES.

SKETCH H1: BAR SHAPE (PIPE CORE), TYPE ZBP

MINIMUM WEIGHT = 8 LB / 3.6 KG

FIGURE 21. Zinc, bar, pipe core, type ZBP.

Downloaded from http://www.everyspec.com

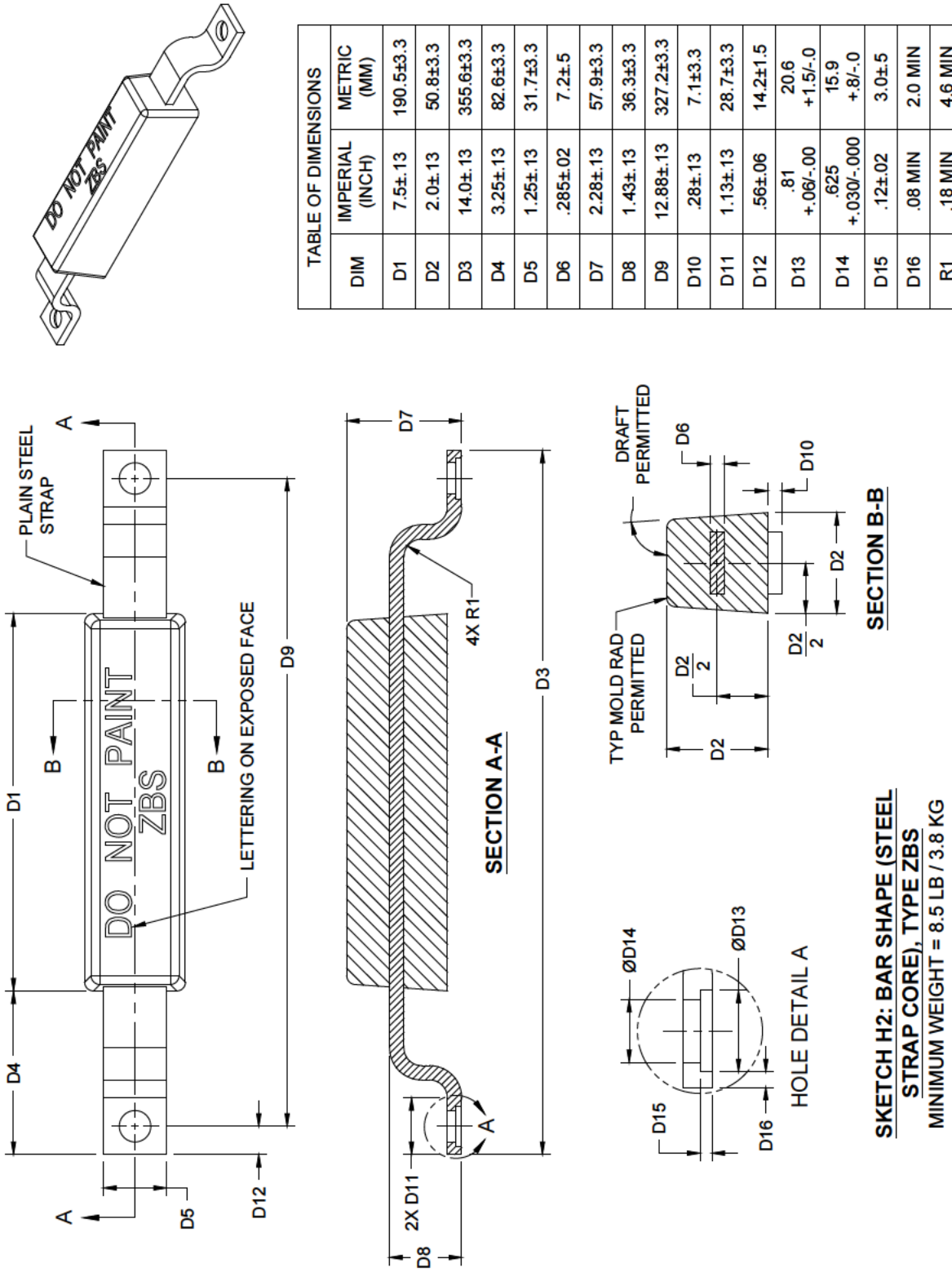

TABLE OF DIMENSIONS		
DIM	IMPERIAL (INCH)	METRIC (MM)
D1	7.5±.13	190.5±3.3
D2	2.0±.13	50.8±3.3
D3	14.0±.13	355.6±3.3
D4	3.25±.13	82.6±3.3
D5	1.25±.13	31.7±3.3
D6	.285±.02	7.2±.5
D7	2.28±.13	57.9±3.3
D8	1.43±.13	36.3±3.3
D9	12.88±.13	327.2±3.3
D10	.28±.13	7.1±3.3
D11	1.13±.13	28.7±3.3
D12	.56±.06	14.2±1.5
D13	.81 +.06/-.00	20.6 +1.5/-.0
D14	.625 +.030/-.000	15.9 +.8/-.0
D15	.12±.02	3.0±.5
D16	.08 MIN	2.0 MIN
R1	.18 MIN	4.6 MIN

FIGURE 22. Zinc, bar, steel core, type ZBS.

Downloaded from http://www.everyspec.com

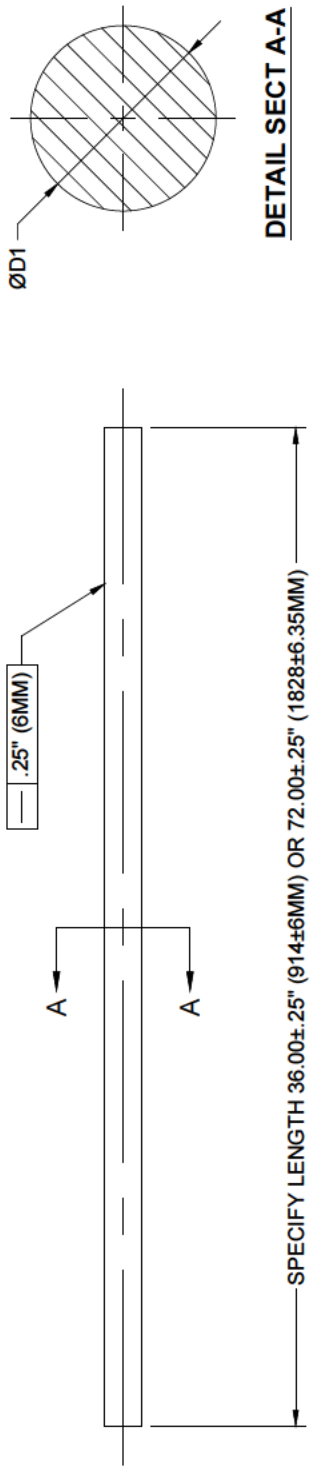

TABLE OF DIMENSIONS

NOM PIPE SIZE	D1 (INCHES) ±0.020 INCH	D1 (MM) ±0.5 MM	NOM WT PER FOOT LENGTH (LB)	NOM WT PER FOOT LENGTH (KG)
1/8	.405	10.3	.40	.18
1/4	.540	13.7	.71	.32
3/8	.675	17.1	1.10	.50
1/2	.840	21.3	1.71	.78
3/4	1.050	26.7	2.67	1.21

SKETCH I: ROD SHAPE (NO CORE), TYPE ZRN, 36" LONG OR 72" LONG

FIGURE 23. Zinc, rod shape (no core), type ZRN.

Downloaded from http://www.everyspec.com

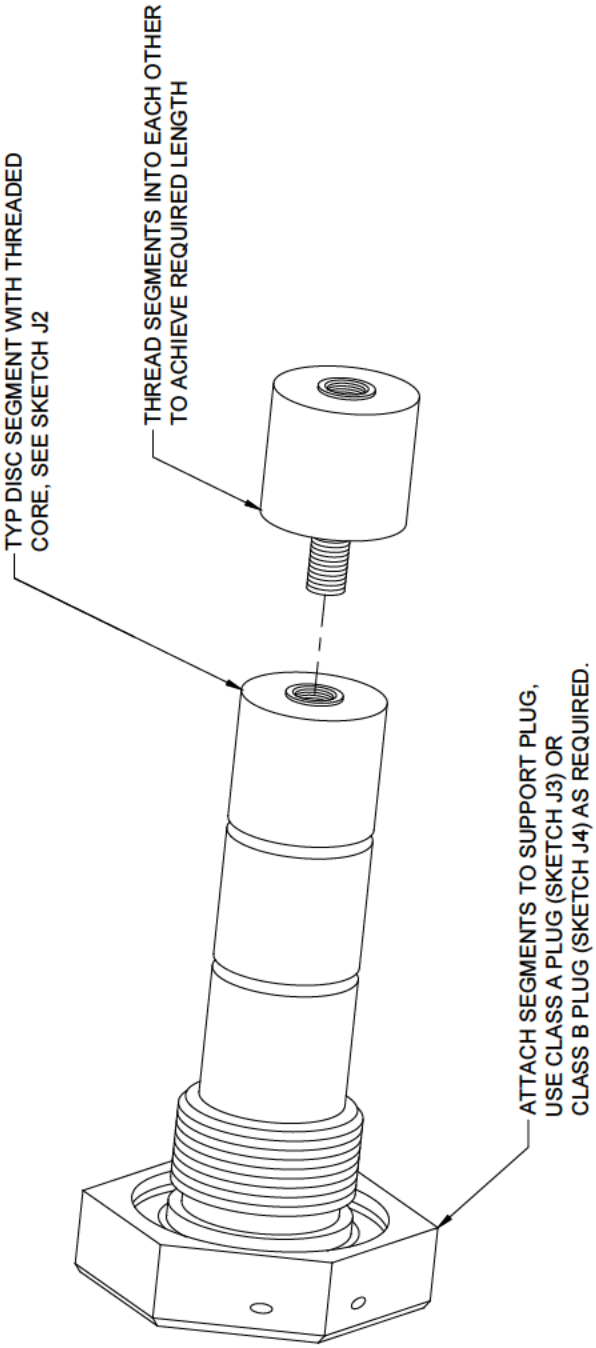

SKETCH J1: SEGMENTED DISC ASSEMBLY ANODE (MACHINE-FORMED INTERLOCKING CORES), TYPE ZDM

1. DISC SEGMENT NOMINAL SIZE SHALL MATCH NOMINAL SIZE OF SUPPORT PLUG USED. SEE SKETCHES J2 - J4.

FIGURE 24. Zinc, segmented disc assembly anode (interlocking core), type ZDM.

Downloaded from http://www.everyspec.com

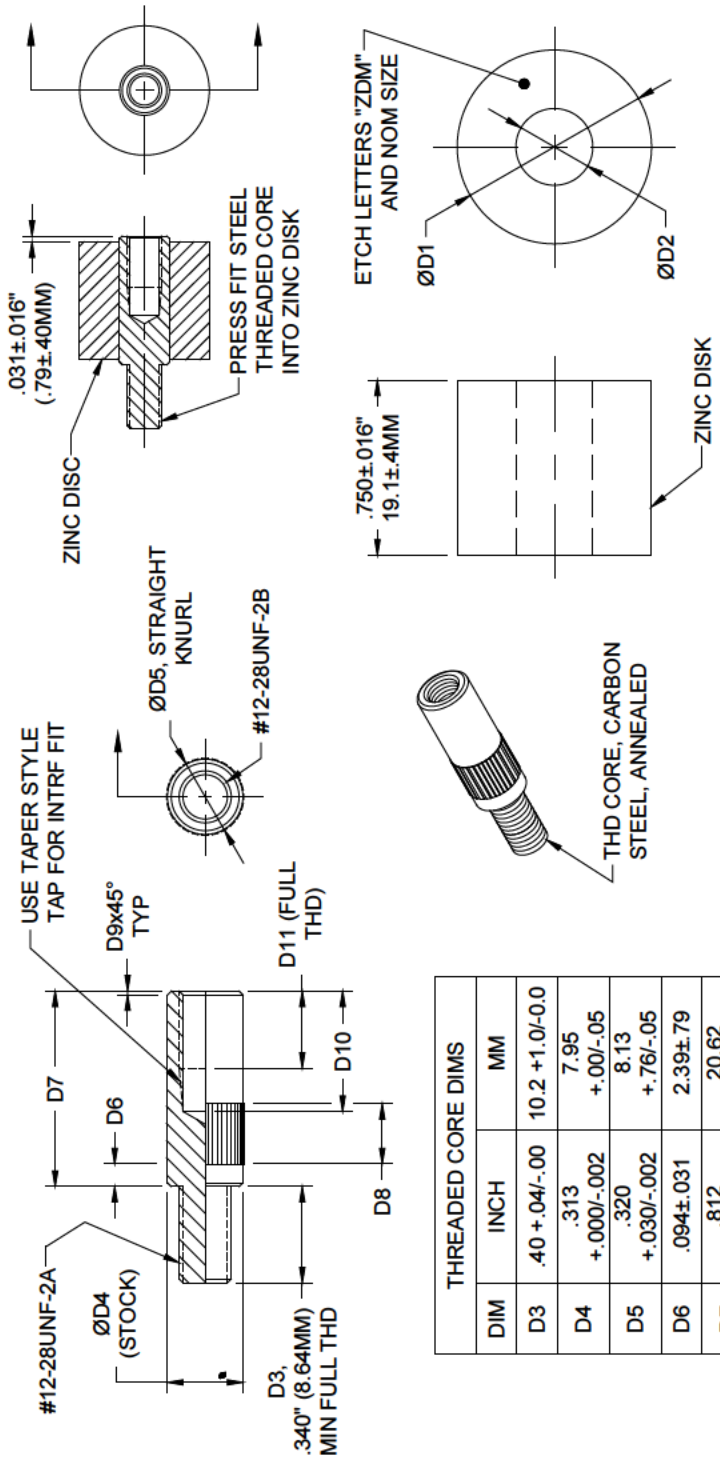

THREADED CORE DIMS		
DIM	INCH	MM
D3	.40 +.04/-.00	10.2 +1.0/-0.0
D4	.313 +.000/-.002	7.95 +.00/-.05
D5	.320 +.030/-.002	8.13 +.76/-.05
D6	.094±.031	2.39±.79
D7	.812 +.005/-.000	20.62 +.13/-.00
D8	.25±.06	6.4±1.5
D9	.016±.004	.40±.10
D10	.50 +.12/-.00	12.7 +3.0/-0.0
D11	0.32 +.00/-.03	8.1 +.0/-.8

THREADED CORE DIMS						
PLUG NOM PIPE SIZE	D1 (INCH)	D1 (MM)	D2 (INCH)	D2 (MM)	QTY PER PKG	PKG WT (LBS)	PKG WT (KG)
1	1.050 ±.016	26.67 ±.40	.313 +.002/-.000	7.95 +.05/-.00	50	8	3.6
3/4	.825 ±.016	20.96 ±.40	.313 +.002/-.000	7.95 +.05/-.00	100	10	4.5
1/2	.625 ±.016	15.88 ±.40	.313 +.002/-.000	7.95 +.05/-.00	200	12	5.4
3/8	.500 ±.016	12.70 ±.40	.313 +.002/-.000	7.95 +.05/-.00	200	8	3.6

SKETCH J2: SEGMENTED DISC
(INTERLOCKING THREADED CORE), TYPE ZDM

FIGURE 25. Zinc, segmented disc (interlocking thread core), type ZDM.

Downloaded from http://www.everyspec.com

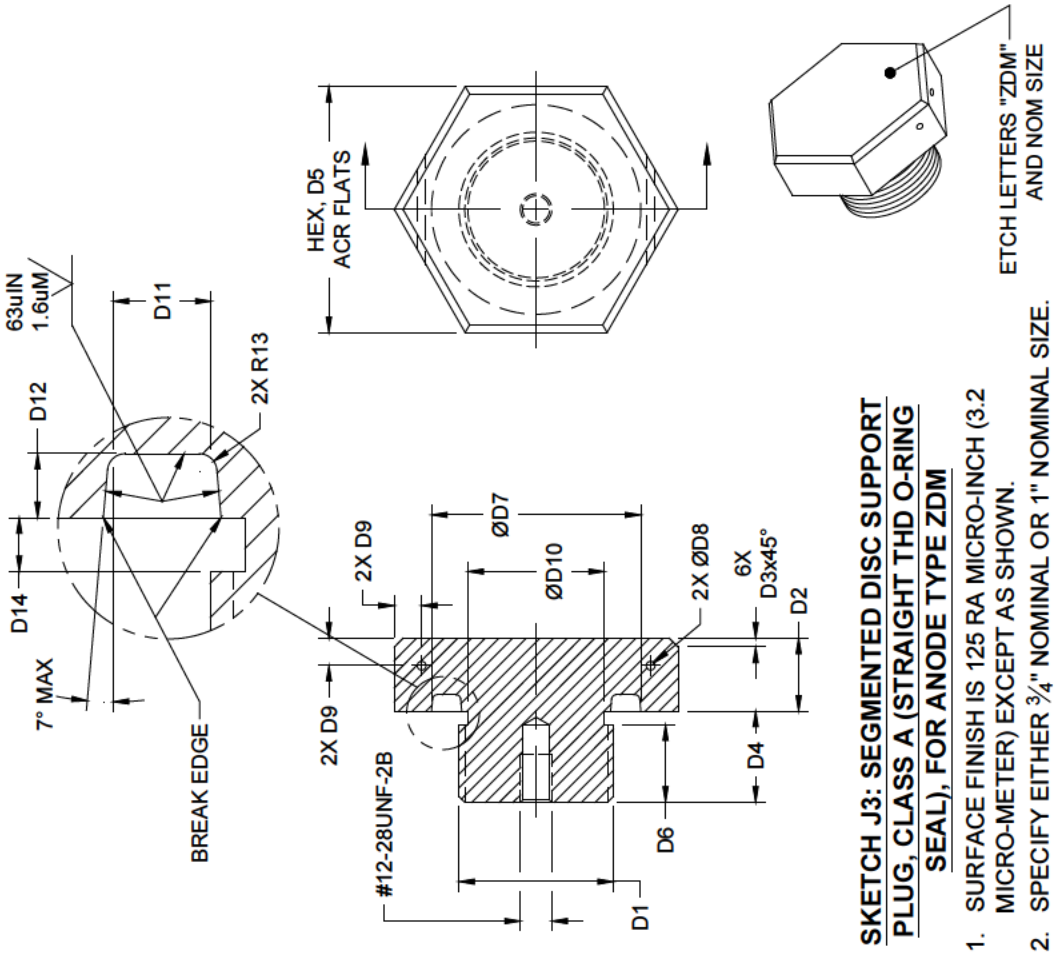

CLASS A PLUG DIMENSIONS				
DIM	NOM ¾" (INCH)	NOM ¾" (MM)	NOM 1" (INCH)	NOM 1" (MM)
D1	1⅛"-12UN-2A	1⅛"-12UN-2A	1⁵⁄₁₆"-12UN-2A	1⁵⁄₁₆"-12UN-2A
D2	.500±.016	12.7±.4	.500±.016	12.7±.4
D3	.06±.02	1.5±.5	.06±.02	1.5±.5
D4	.625 ±.016	15.87 ±.40	.875 ± 016	22.22 ±.40
D5	1.688 ±.016	42.9 ±.40	1.938 ± 016	49.21 ±.40
D6	.53±.03	13.5±.8	.53±.03	13.5±.8
D7	1.438 ±.016	36.53 ±.40	1.688 ± 016	42.88 ±.40
D8	.06 +.03/-.00	1.5 +.8/-.0	.06 +.03/-.00	1.5 +.8/-.0
D9	.188 ±.016	4.78 ±.40	.188 ± 016	4.78 ±.40
D10	.938 ± 016	23.83 ±.40	1.188 ± 016	30.18 ±.40
D11	.188 ±.016	4.78 ±.40	.188 ± 016	4.78 ±.40
D12	.113 +.000/-.005	2.87 +.00/-.12	.113 +.000/-.005	2.87 +.00/-.12
R13	.031 ± 016	.79±.40	.031 ± 016	.79±.40
D14	.125 ± 016	3.18 ±.40	.125 ± 016	3.18 ±.40

FIGURE 26. Zinc, segmented disc support plug, class A (straight thread O-ring seal), type ZDM.

Downloaded from http://www.everyspec.com

CLASS B PLUG DIMENSIONS

NOM PIPE SIZE, (UNITS)	D1	D2	D3	D4	D5	D6	D7
NOM SIZE 1 (INCH)	1"-11½NPT	1.315±.003	.500	.063	1.500	.188	.53±.03
NOM SIZE 1 (MM)	1"-11½NPT	33.40±.08	12.7	1.60	38.10	4.78	13.5±.8
NOM SIZE ¾ (INCH)	¾"-14NPT	1.050±.003	.375	.063	1.250	.188	.53±.03
NOM SIZE ¾ (MM)	¾"-14NPT	26.67±.08	9.53	1.60	31.75	4.78	13.5±.8
NOM SIZE ½ (INCH)	½"-14NPT	.840±.003	.375	.063	1.000	.125	.53±.03
NOM SIZE ½ (MM)	½"-14NPT	21.34±.08	9.53	1.60	25.40	3.18	13.5±.8
NOM SIZE ⅜ (INCH)	⅜"-18NPT	.675±.003	.313	.063	.750	.125	.53±.03
NOM SIZE ⅜ (MM)	⅜"-18NPT	17.15±.08	7.95	1.60	19.05	3.18	13.5±.8

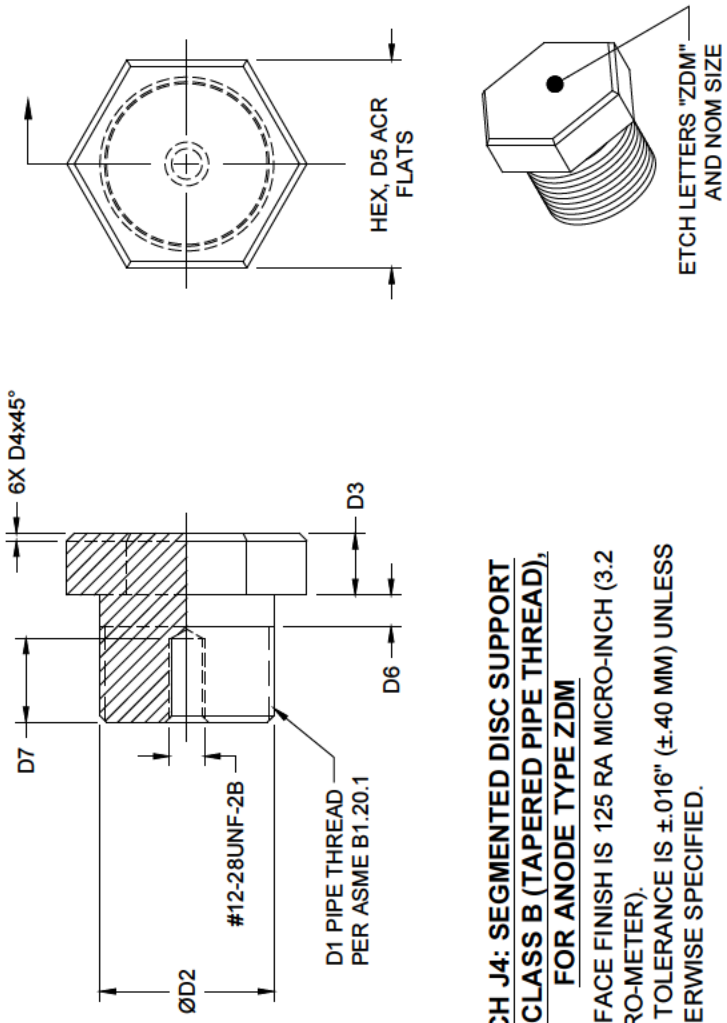

SKETCH J4: SEGMENTED DISC SUPPORT PLUG, CLASS B (TAPERED PIPE THREAD), FOR ANODE TYPE ZDM

1. SURFACE FINISH IS 125 RA MICRO-INCH (3.2 MICRO-METER).
2. STD TOLERANCE IS ±.016" (±.40 MM) UNLESS OTHERWISE SPECIFIED.

FIGURE 27. Zinc, segmented disc support plug, class B (tapered pipe thread), type ZDM.

Downloaded from http://www.everyspec.com

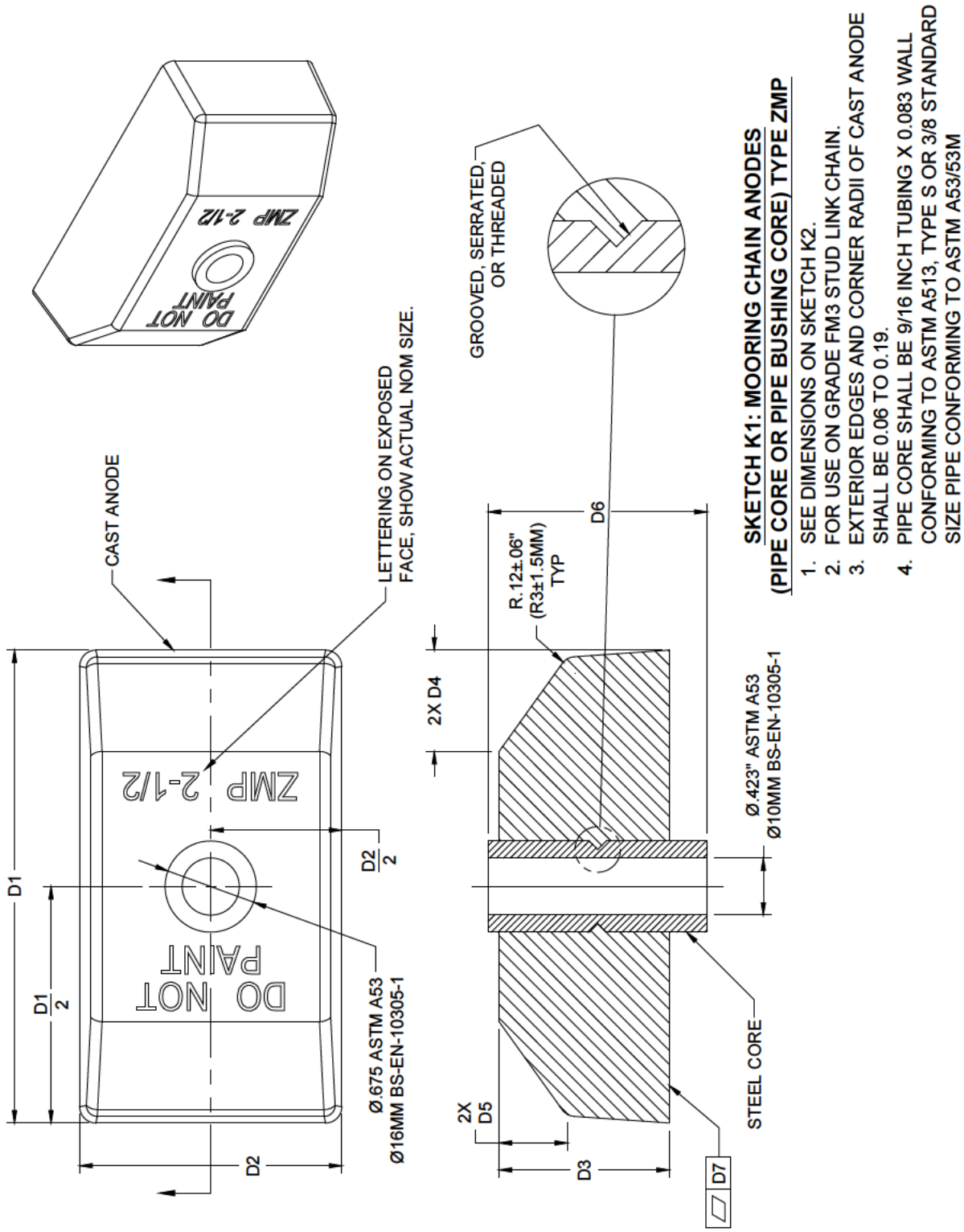

FIGURE 28. Zinc, mooring chain anodes (pipe core), type ZMP.

Downloaded from http://www.everyspec.com

MOORING CHAIN ANODE DIMENSIONS

NOM chain size	D1 (inch) ±0.12	D1 (mm) ±3.0	D2 (inch) ±0.06	D2 (mm) ±1.5	D3 (inch) +0/-0 12	D3 (mm) +0/-3.0	D4 (inch) ±0.06	D4 (mm) ±1.5	D5 (inch) ±0.06	D5 (mm) ±1.5	D6 (inch) +0.06/-0	D6 (mm) +1.5/-0	D7 (inch)	D7 (mm)	Approx wt (lb)	Approx wt (kg)
1¼	2.5	63.5	1.19	30.23	0.52	13.2	0.5	12.70	0.12	3.05	0.7	17.8	0.06	1.52	0.28	0.13
1¾	3.24	82.3	1.5	38.10	0.95	24.1	0.62	15.75	0.38	9.65	1.13	28.7	0.06	1.52	0.79	0.36
2	3.5	88.9	1.62	41.15	1.17	29.7	0.75	19.05	0.37	9.40	1.35	34.3	0.06	1.52	1.09	0.50
2¼	3.5	88.9	1.75	44.45	1.09	27.7	0.75	19.05	0.37	9.40	1.45	36.8	0.09	2.29	1.38	0.62
2½	3.5	88.9	1.94	49.28	1.26	32.0	0.75	19.05	0.5	12.70	1.62	41.2	0.09	2.29	1.69	0.77
2¾	4	101.6	2.06	52.32	1.51	38.3	1	25.40	0.5	12.70	1.91	48.5	0.09	2.29	2.04	0.92
3	5	127.0	2.25	57.15	1.51	38.3	1.25	31.75	0.5	12.70	1.91	48.5	0.12	3.05	2.49	1.13
3½	5.5	139.7	2.38	60.45	1.70	43.2	1.75	44.45	0.5	12.70	2.14	54.4	0.12	3.05	3.58	1.62
4	6	152.4	2.69	68.33	1.72	43.6	2	50.80	0.5	12.70	2.28	57.9	0.12	3.05	4.41	2.00

SKETCH K2: MOORING CHAIN ANODES (PIPE CORE) TYPE ZMP

1. See anode views on sketch K1.

FIGURE 28. Zinc, mooring chain anodes (pipe core or pipe bushing core), type ZMP – Continued.

Downloaded from http://www.everyspec.com

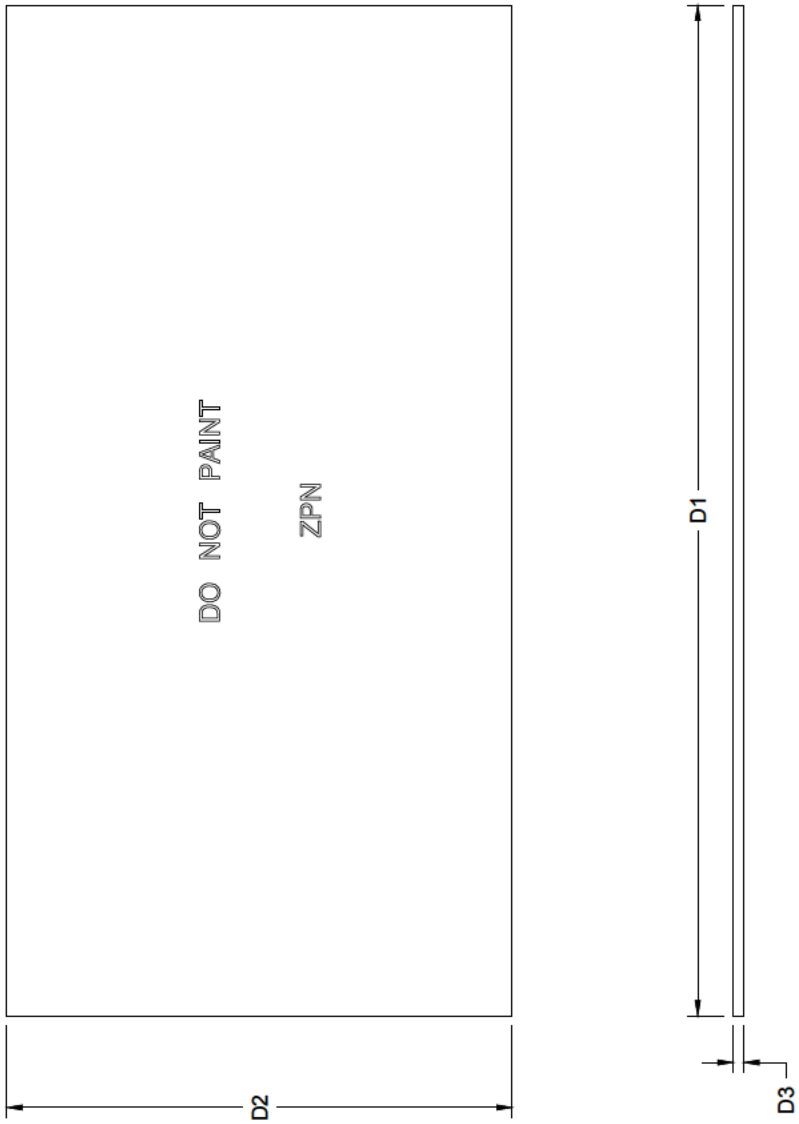

TABLE OF DIMENSIONS		
DIM	IMPERIAL (INCH)	METRIC (MM)
D1	48.00±.25	1219±6.4
D2	24.00±.25	609.6±6.4
D3	.50±.06	12.7±1.5

SKETCH M1: PLATE SHAPE (NO CORE), TYPE ZPN, 0.50" THICK

MINIMUM WEIGHT = 148 LB / 67 KG

FIGURE 29. Zinc plate shape (no core), type ZPN (0.50" thick).

Downloaded from http://www.everyspec.com

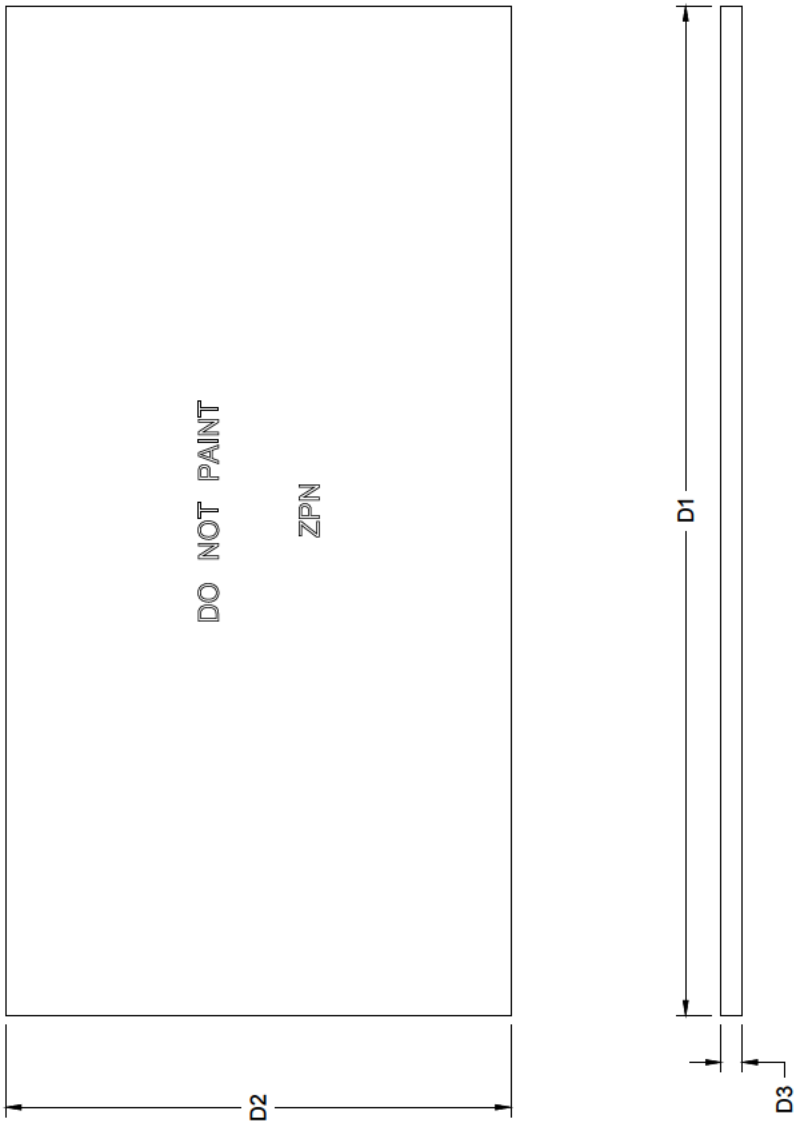

TABLE OF DIMENSIONS		
DIM	IMPERIAL (INCH)	METRIC (MM)
D1	48.00±.25	1219±6.4
D2	24.00±.25	609.6±6.4
D3	1.00±.13	25.4±3.3

SKETCH M2: PLATE SHAPE (NO CORE), TYPE ZPN, 1.00" THICK

MINIMUM WEIGHT = 296 LB / 134 KG

FIGURE 30. Zinc plate shape (no core), type ZPN (1.00" thick).

Downloaded from http://www.everyspec.com

Custodians:
Army – AT
Navy – SH
Air Force – 99

Review activities:
Army – CE, CR4
Navy – OS, YD
Air Force – 71
DLA – IS

Preparing activity:
Navy – SH
(Project 5342-2015-001)

NOTE: The activities listed above were interested in this document as of the date of this document. Since organizations and responsibilities can change, you should verify the currency of the information above using the ASSIST Online database at https://assist.dla.mil.