INCH-POUND
MIL-DTL-16377/53D
30 June 2014
SUPERSEDING
MIL-DTL-16377/53C
27 September 2005

DETAIL SPECIFICATION SHEET

FIXTURES, LIGHTING; INCANDESCENT AND LIGHT EMITTING DIODE (LED), DETAIL LIGHTING, LANTERN, HAND, PORTABLE AND BULKHEAD MOUNTED, WATERTIGHT, SYMBOLS 100.2, 100.2L, 100.3, 100.3L, 101.2, 101.2L, 101.3, 101.3L, 102.2, 102.2L, 108, AND 108L

This specification is approved for use by all Departments and Agencies of the Department of Defense.

The requirements for acquiring the product described herein shall consist of this specification sheet and MIL-DTL-16377.

NOTE: Unless otherwise specified, all dimensions are in inches on figures 3 – 22.

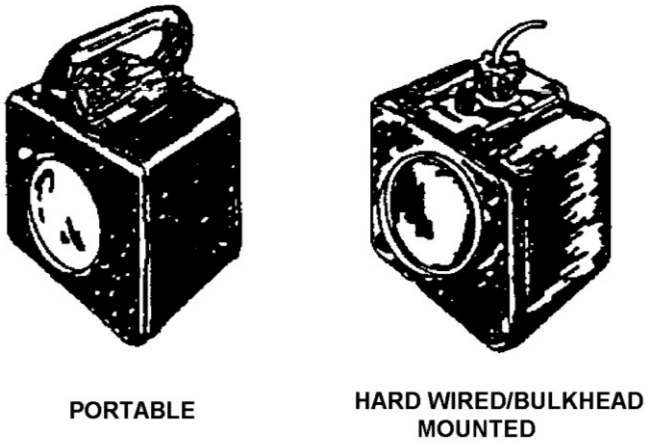

FIGURE 1. Lanterns, hand, portable and hard wired/bulkhead mounted.

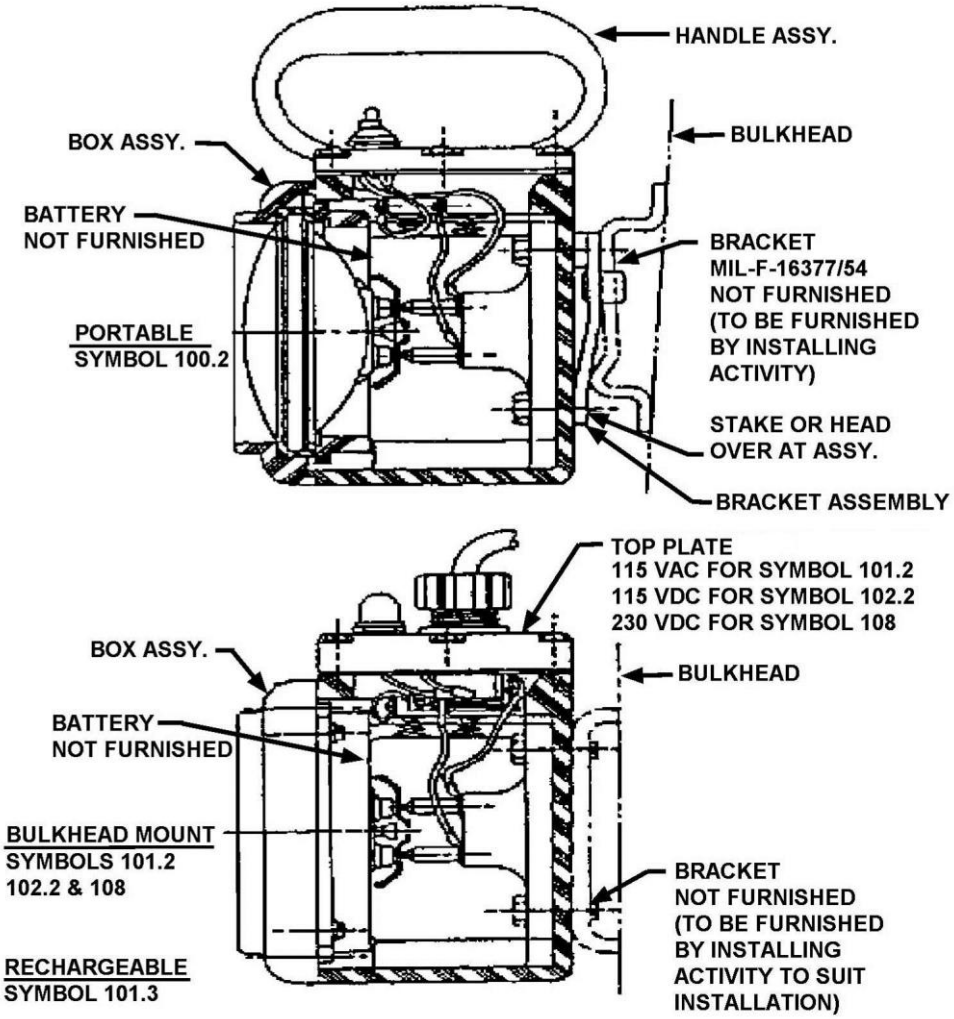

NOTE:

1. Symbols 100.2, 101.2, 102.2, and 108 are non-rechargeable with incandescent lamps. For Symbols 100.2L, 101.2L, 102.2L, and 108L with LED assemblies, the lamp function is replaced by the LED assembly.

FIGURE 2. Lantern assembly and typical mounting.

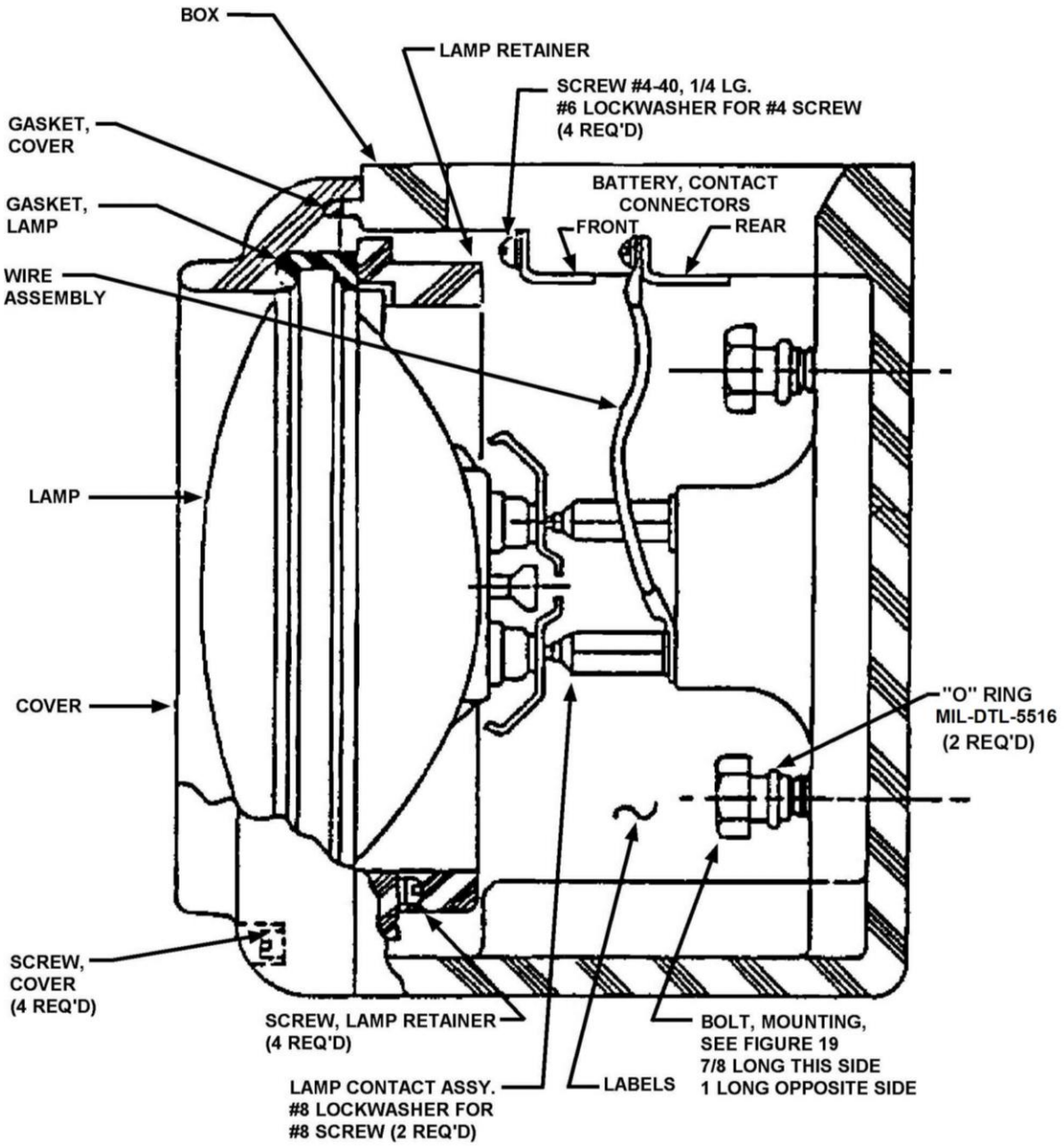

FIGURE 3. Incandescent body assembly.

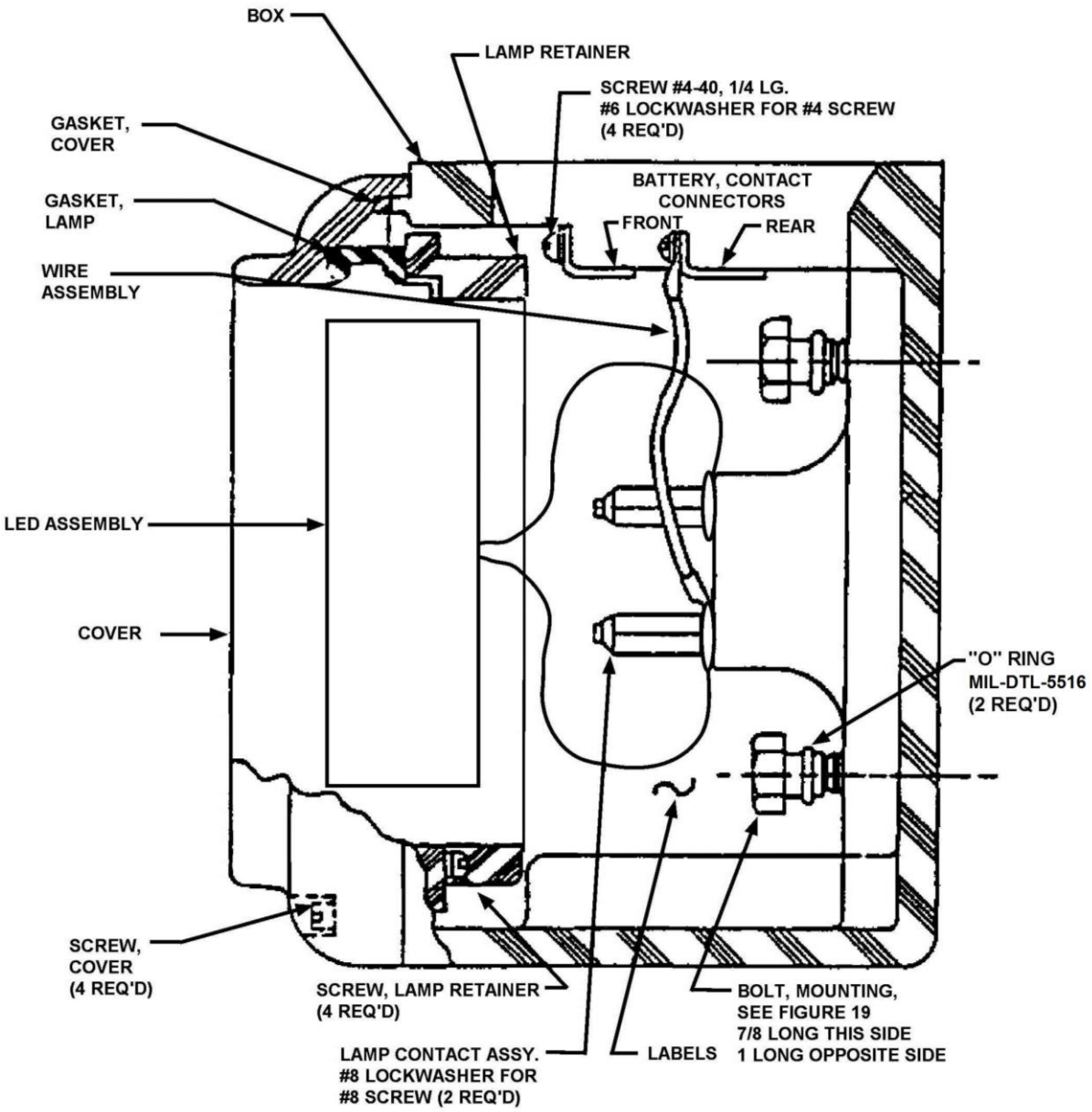

NOTE:

1. The connection of the LED assembly to the legacy incandescent lamp contacts (posts) in the figure is notional. Manufacturers can make this connection in whatever way they see fit as long as the connection is made.

FIGURE 4. LED body assembly.

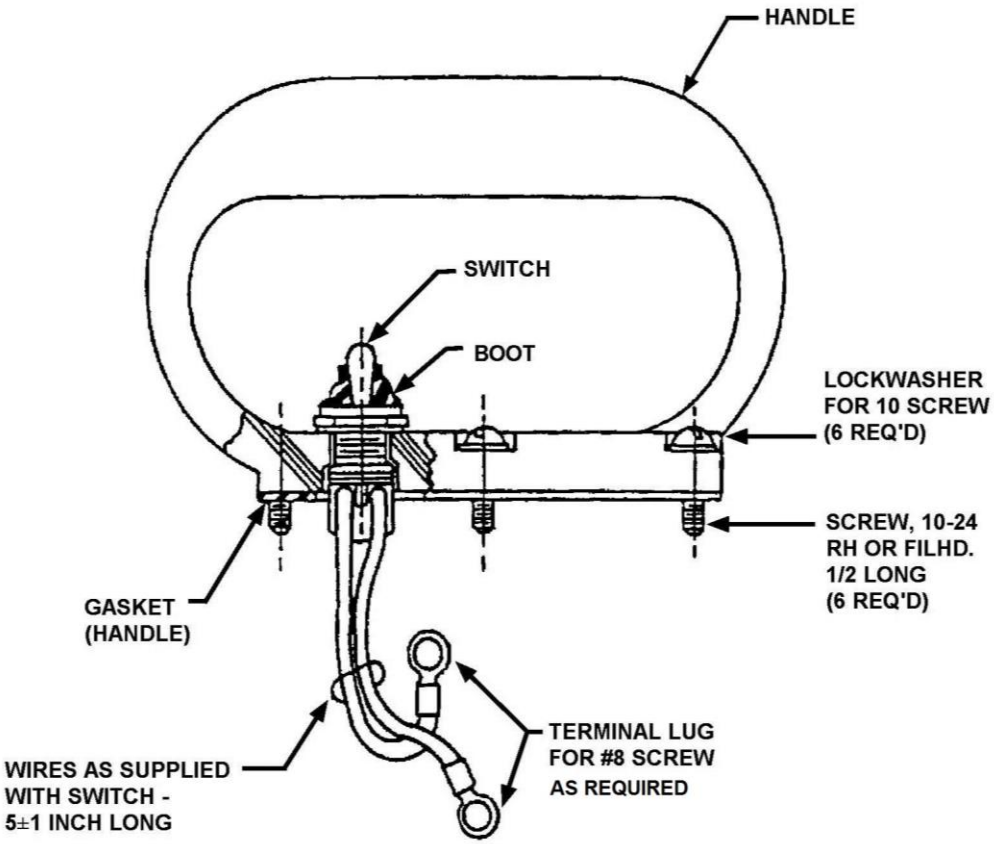

NOTE:

1. See figure 23 for wiring diagram.

FIGURE 5. Handle assembly for symbols 100.2 and 100.2L.

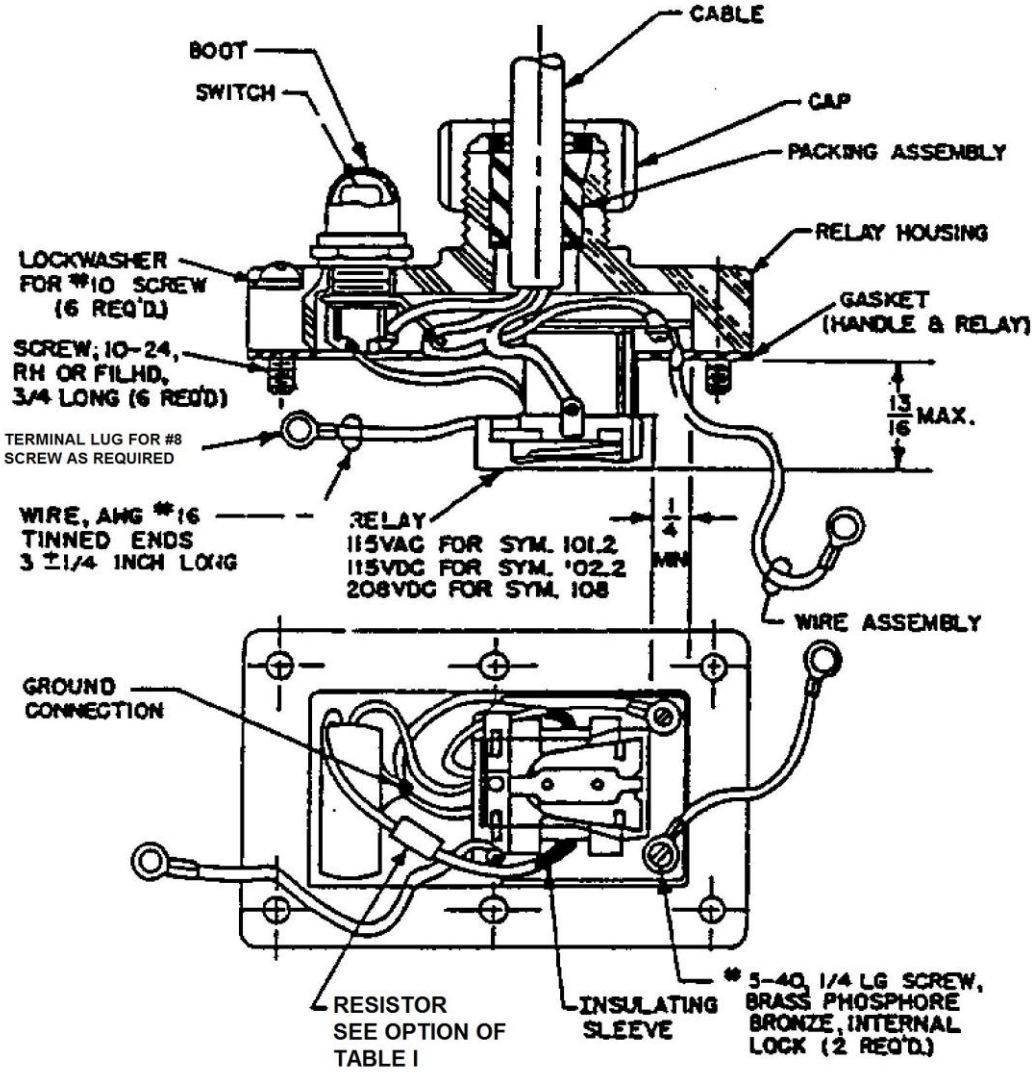

FIGURE 6. Bulkhead mounted top plate assembly for symbols 101.2, 101.2L, 102.2, 102.2L, 108, and 108L.

FIGURE 7. Relay.

TABLE I. Relay contact and coil ratings.

Characteristic	115 VAC	115 VDC	230 VDC
Frequency	60 Hz	---	---
Duty	Continuous	Continuous	Continuous
Operating voltage	125 max.	125 max.	250 max.
Coil rating	115 volts	115 volts	230 volts
Pull-in voltage	70-30 min.	70-30 min.	140-60 min.
Contact rating	2 amps, 6 volts	2 amps, 6 volts	2 amps, 6 volts
Service life	100,000 cycles	100,000 cycles	100,000 cycles
Contact resistance	0.1 ohm max.	0.1 ohm max.	0.1 ohm max.
Insulation resistance	100 megohms min.	100 megohms min.	100 megohms min.
Dielectric strength	1,000 V rms	1,000 V rms	1,000 V rms
Coil resistance	3,000 ohms	12,000 ohms	1/

NOTE:
1/ For 230 VDC operation, the 115-VDC relay with 12,000 ohm, 2-watt resistor in series with coil may be used.

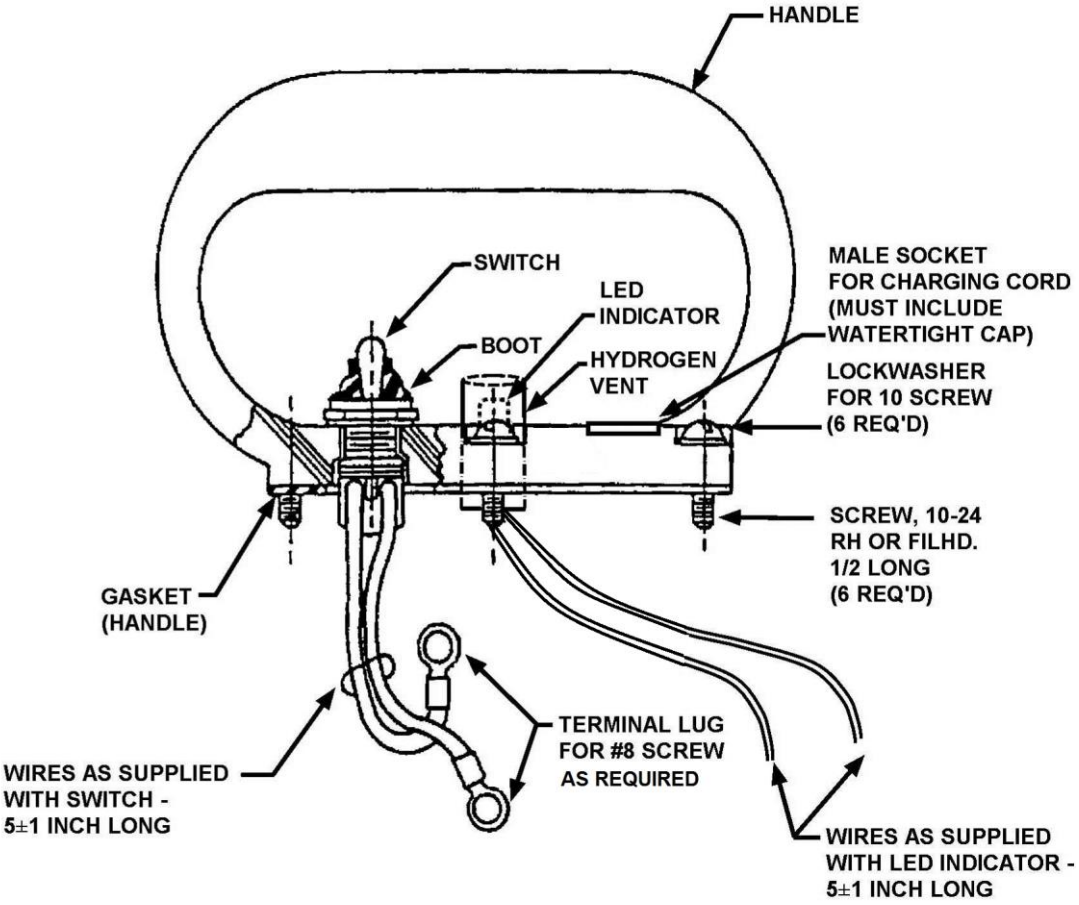

NOTES:

1. Location of switch, R/G charge status LED indicator, and hydrogen vent is at the discretion of the manufacturer.
2. Wire lengths in this figure are nominal. Manufacturers shall ensure that wires are long enough to make internal connections.

FIGURE 8. Handle assembly for symbols 100.3 and 100.3L.

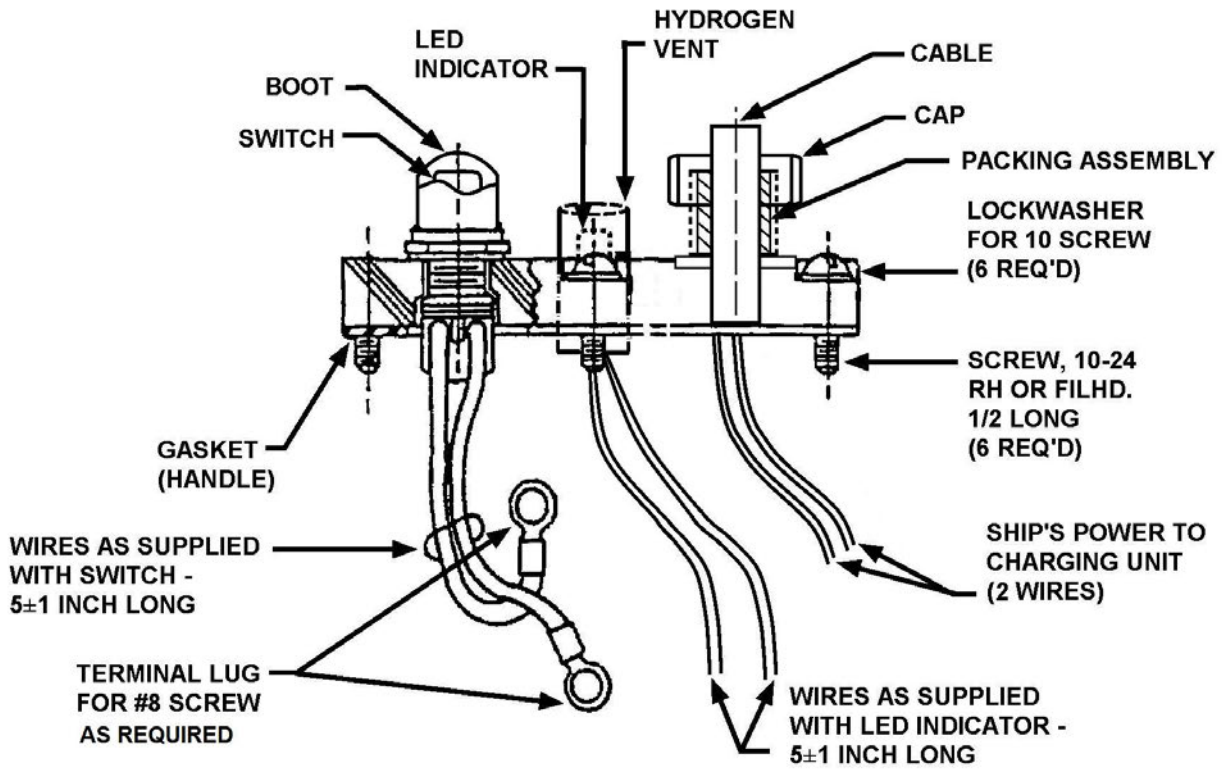

NOTES:

1. Test switch (non-sparking or magnetic actuating) shall also be included. Switch shall also be watertight.
2. Location of test switch, LED indicator, and hydrogen vent is at the discretion of the manufacturer.
3. Wire lengths in this figure are nominal. Manufacturers shall ensure that wires are long enough to make internal connections.
4. Incoming cable contains three conductors. The third conductor is used to provide a safety ground for the push button switch and any other exposed metal parts. This conductor is not shown in the drawing to improve clarity.

FIGURE 9. Bulkhead mounted top plate assembly for symbols 101.3 and 101.3L.

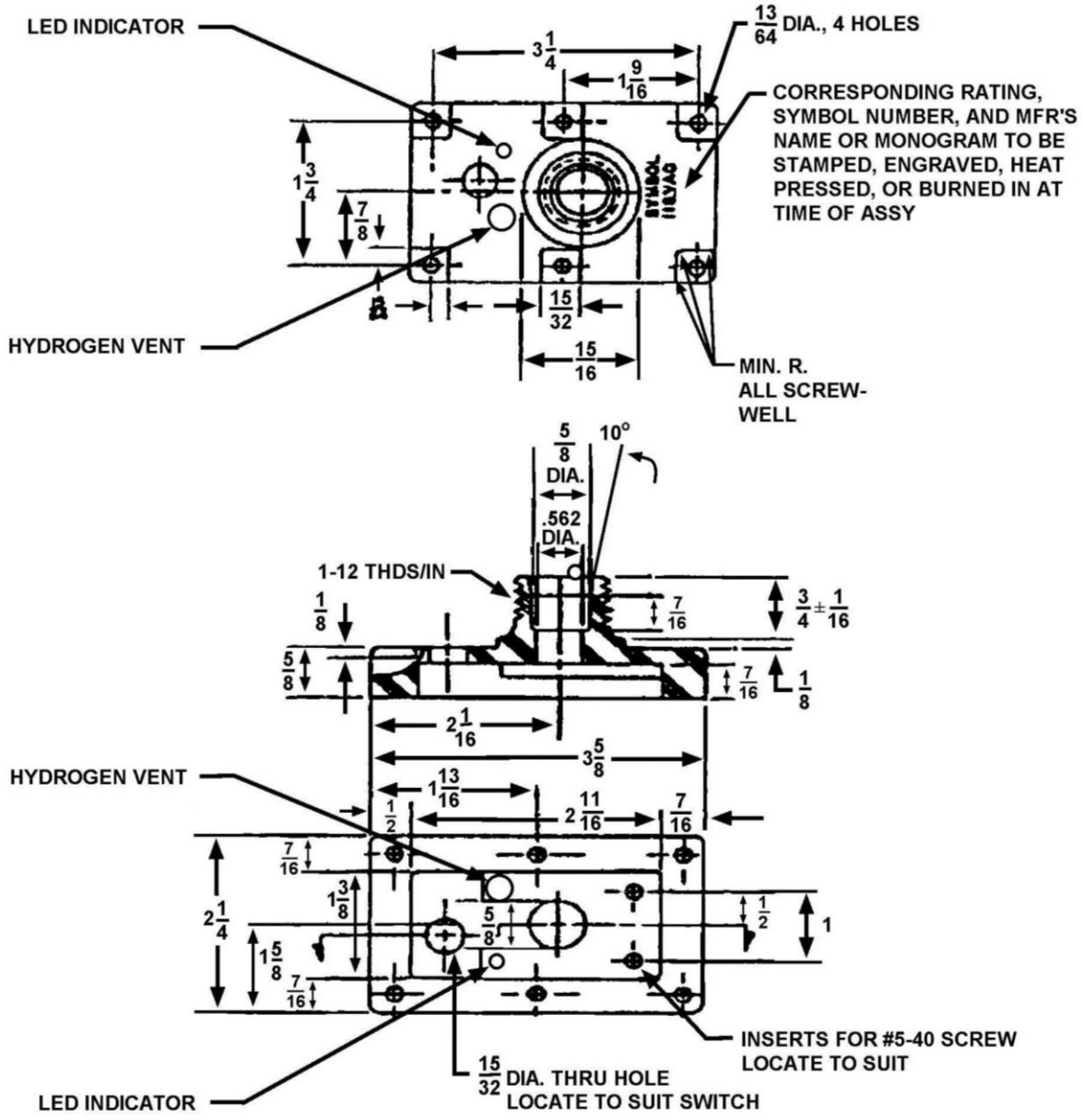

NOTES:

1. Test switch (non-sparking or magnetic actuating) shall also be included.
2. Location of test switch, LED indicator, and hydrogen vent is at the discretion of the manufacturer.

FIGURE 10. Bulkhead mounted top plate assembly for symbols 101.2, 101.2L, 101.3, and 101.3L.

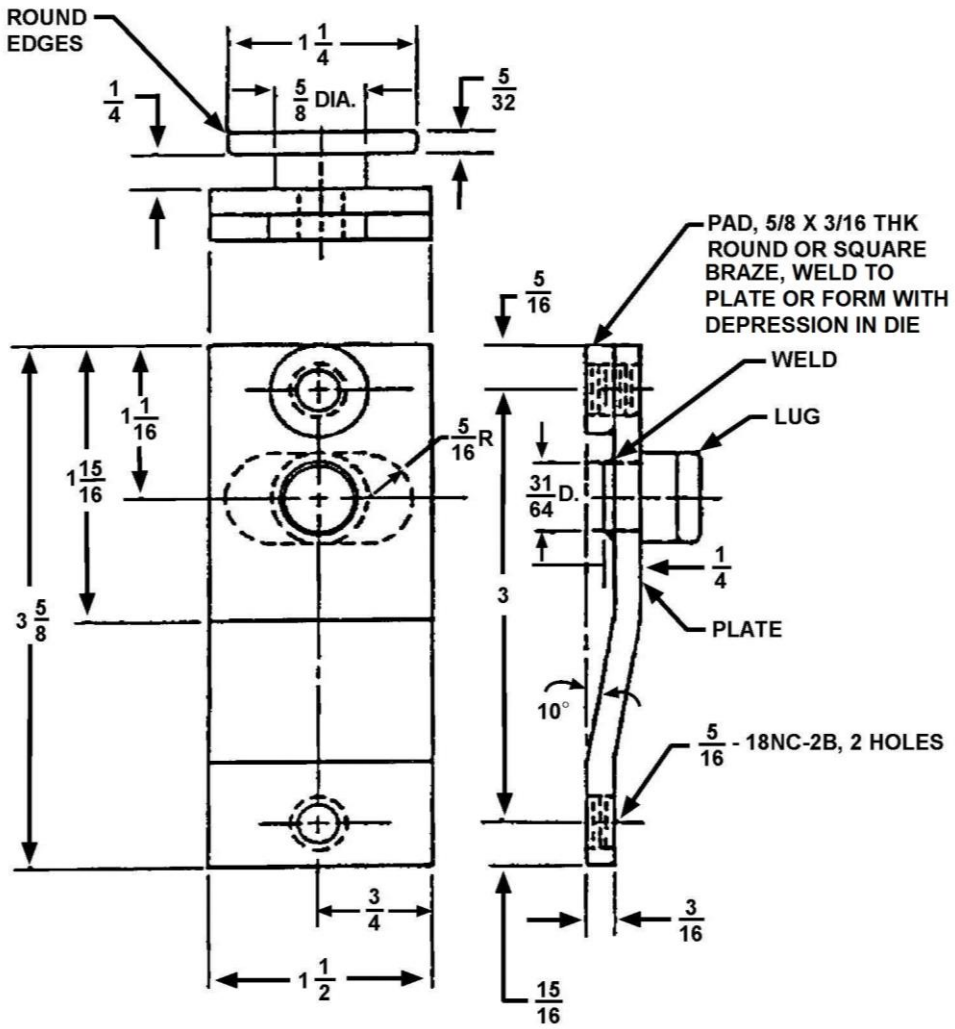

FIGURE 11. Universal bracket assembly.

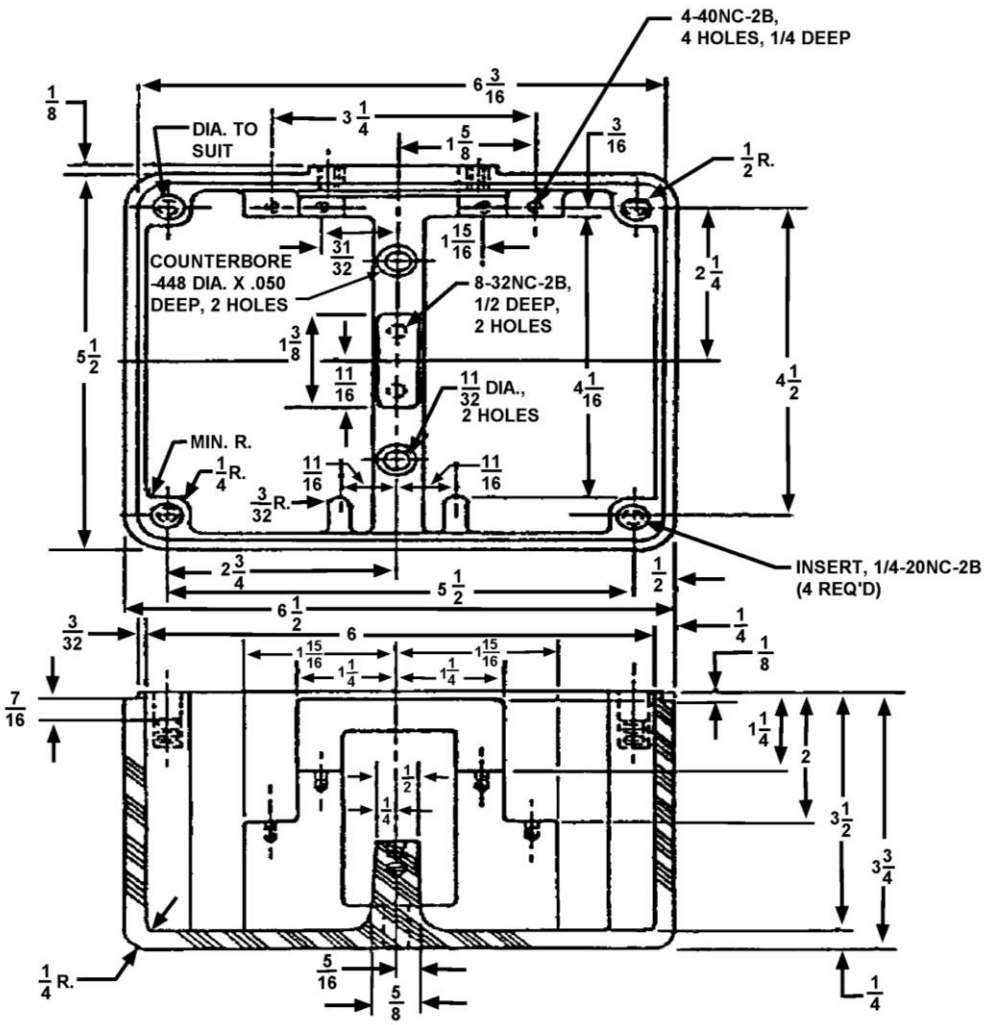

FIGURE 12. Universal box.

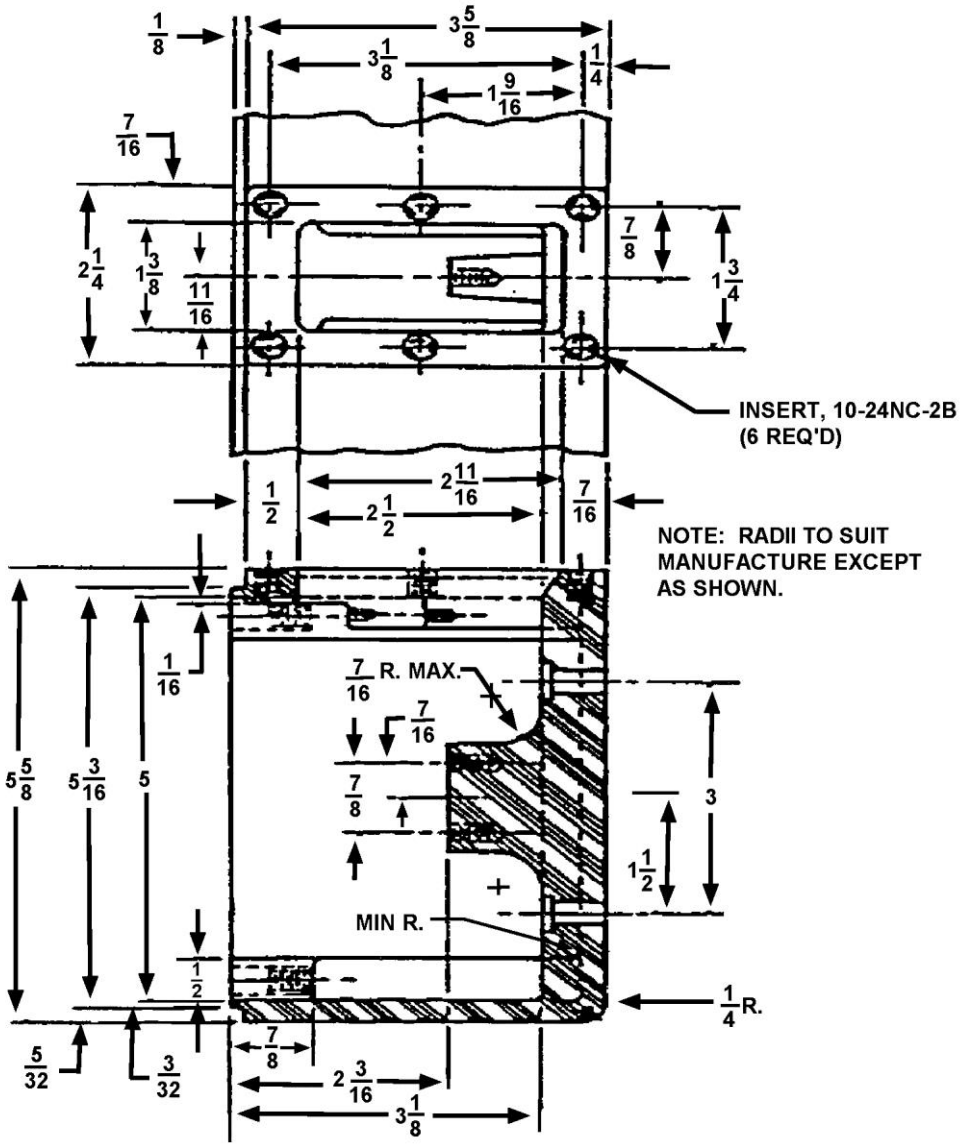

FIGURE 12. Universal box - Continued.

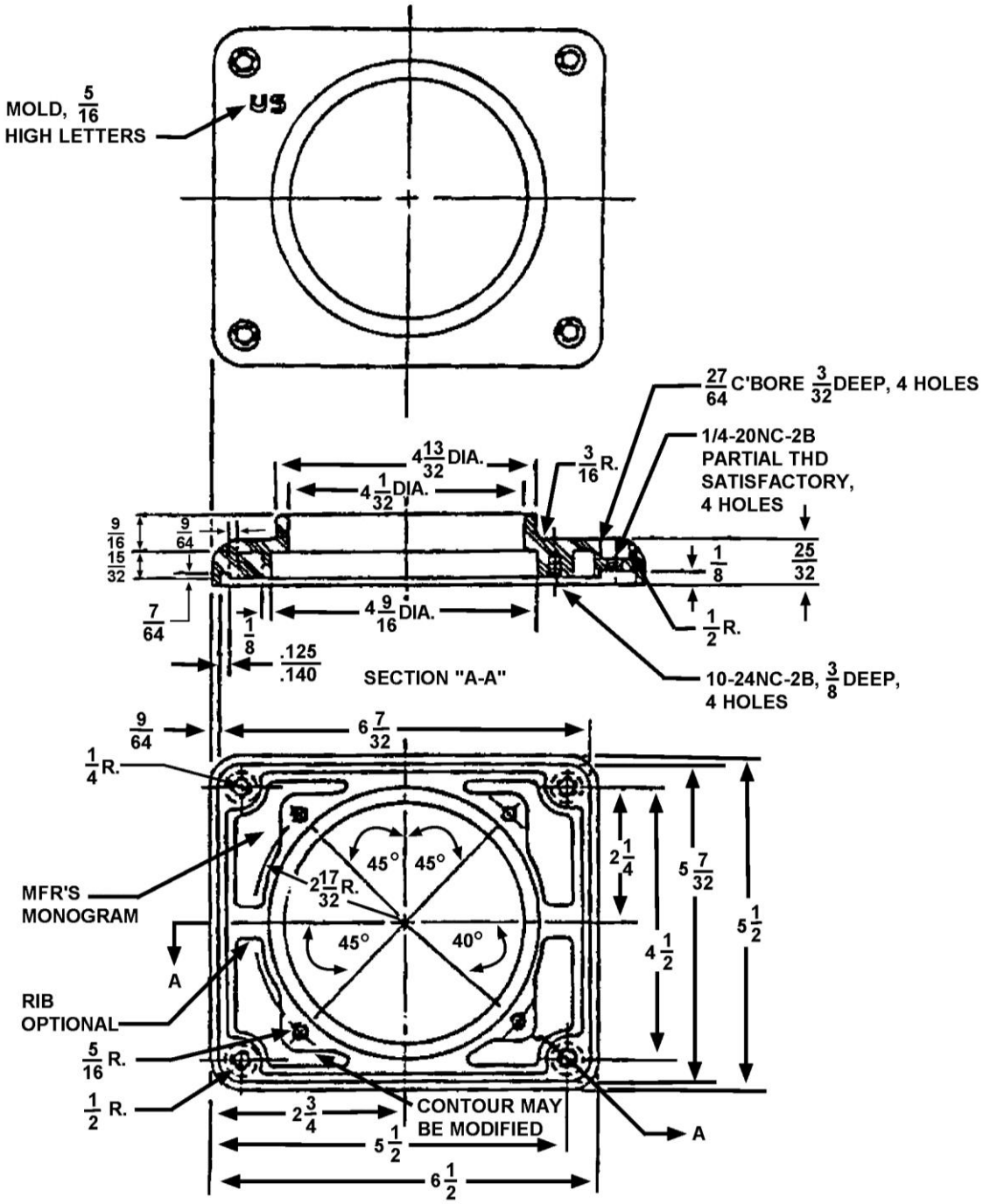

FIGURE 13. Universal cover.

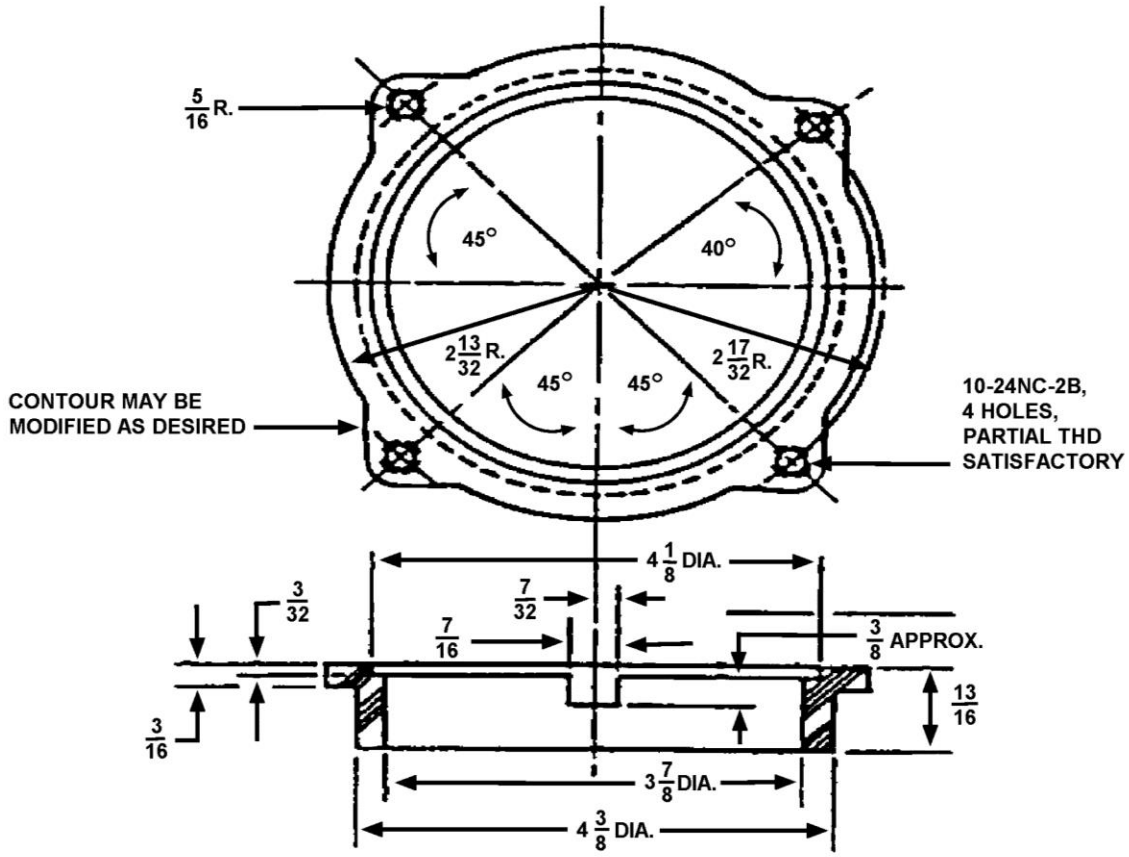

FIGURE 14. Universal lamp retainer.

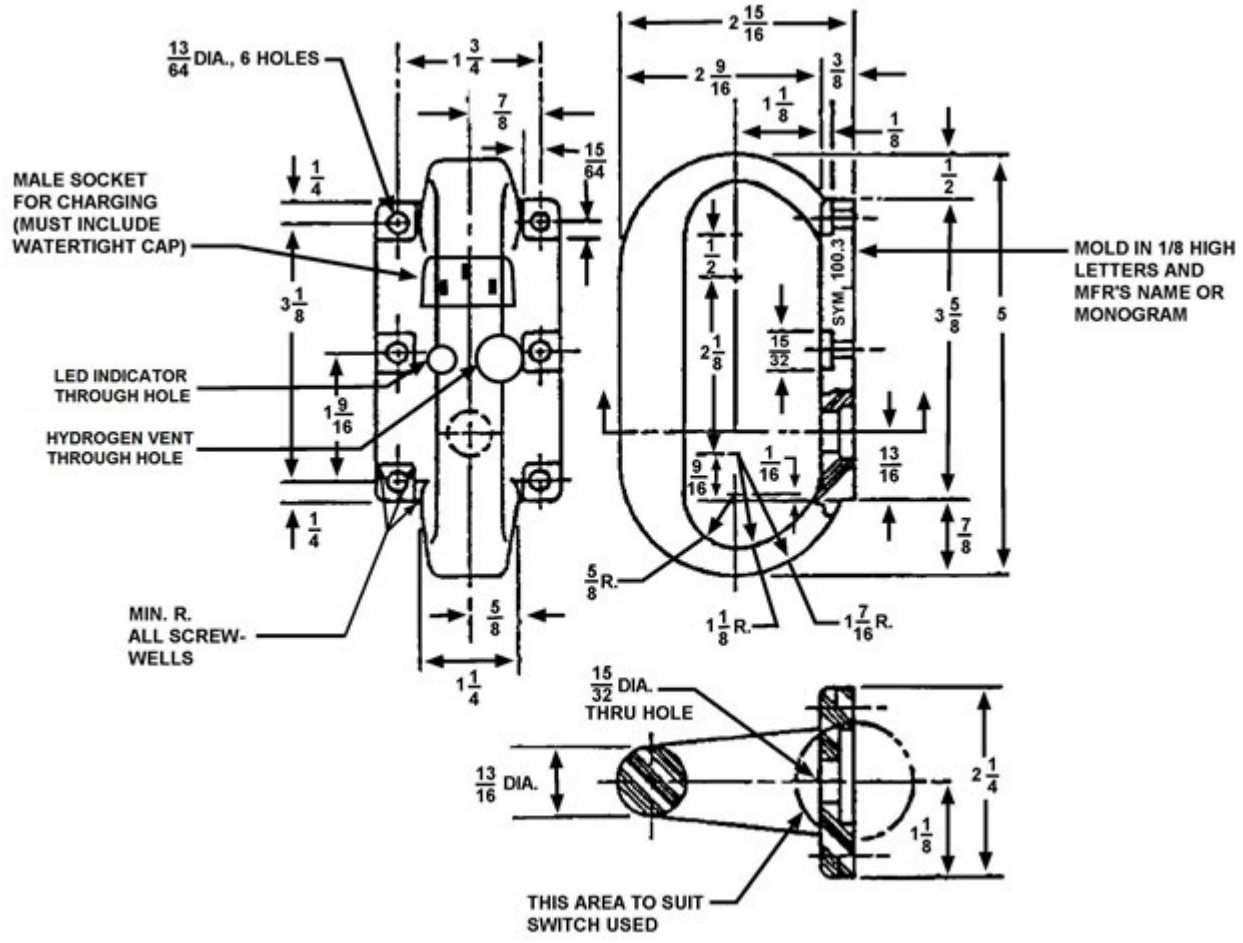

NOTE:

1. LED indicator and hydrogen vent through holes shown here are for example only. Through holes can be to manufacturer's discretion.

FIGURE 15. Rechargeable handle for symbols 100.3 and 100.3L.

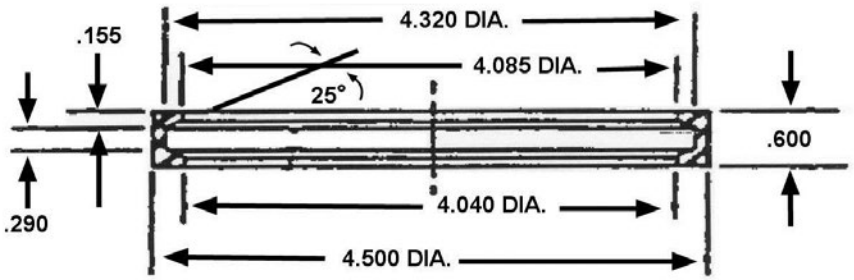

FIGURE 16. Gasket, lamp.

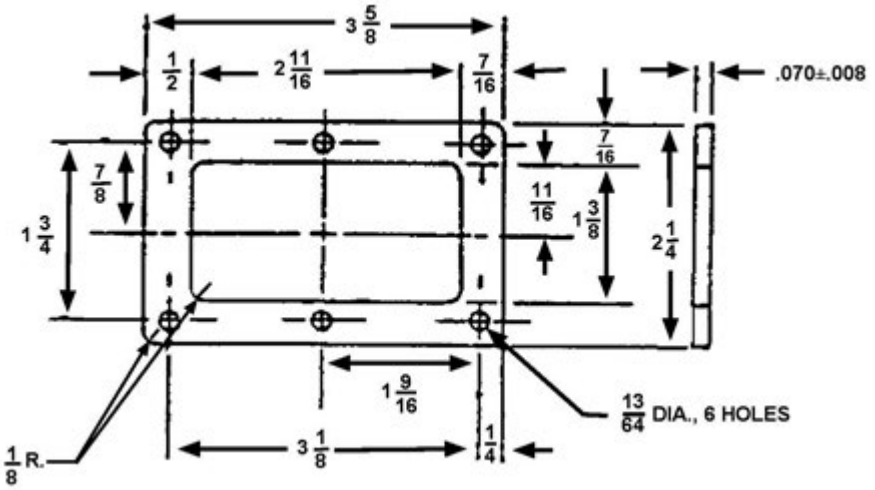

FIGURE 17. Universal gasket for handle and top plate assembly.

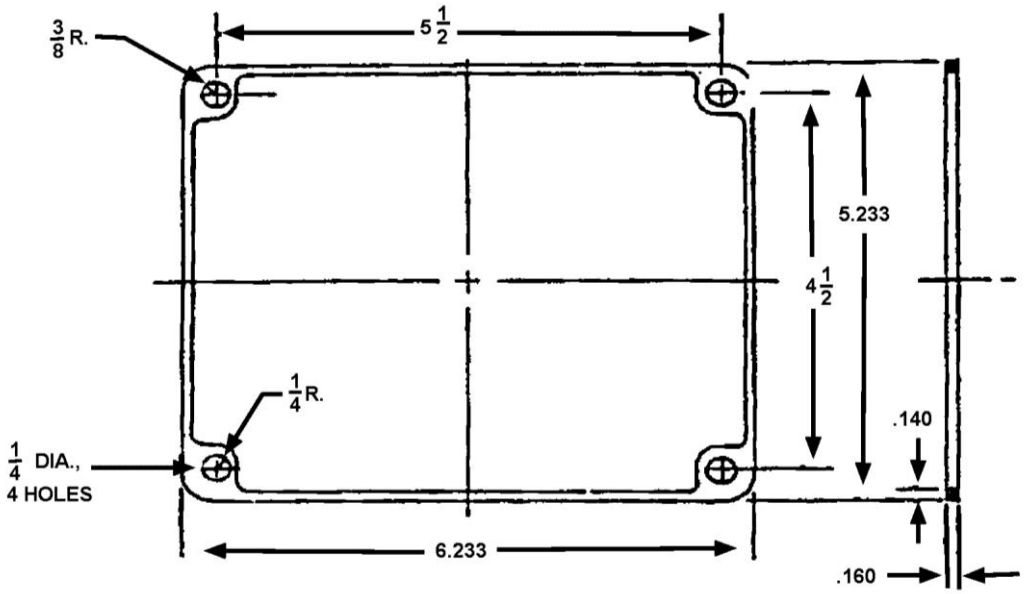

FIGURE 18. Universal gasket, cover.

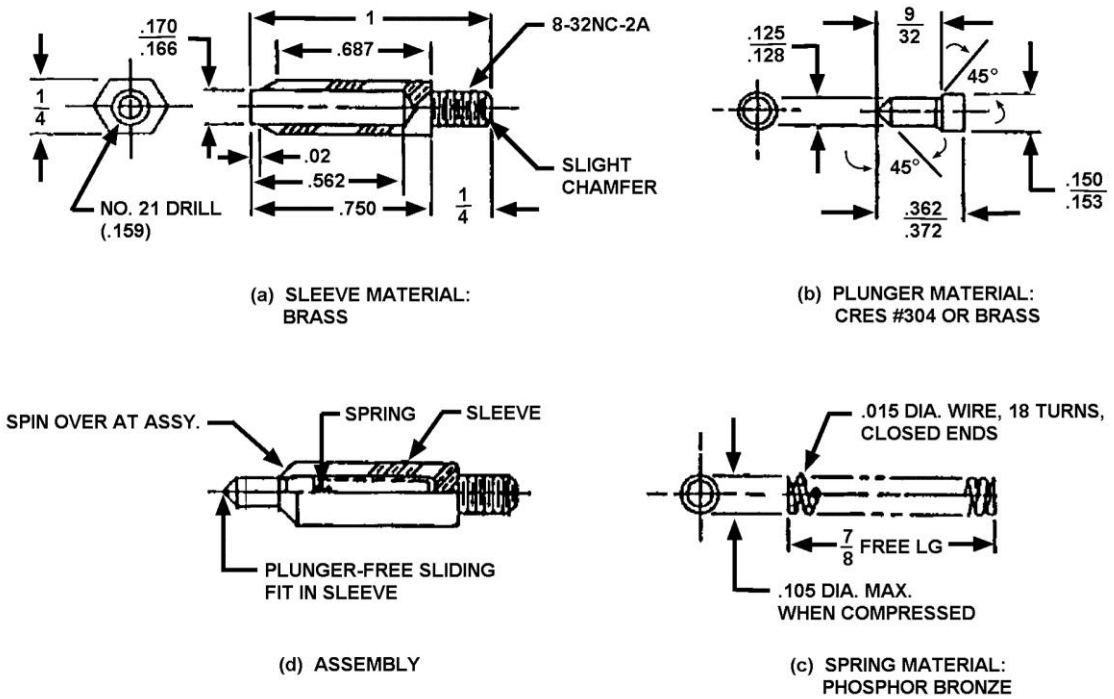

FIGURE 19. Universal lamp contact assembly.

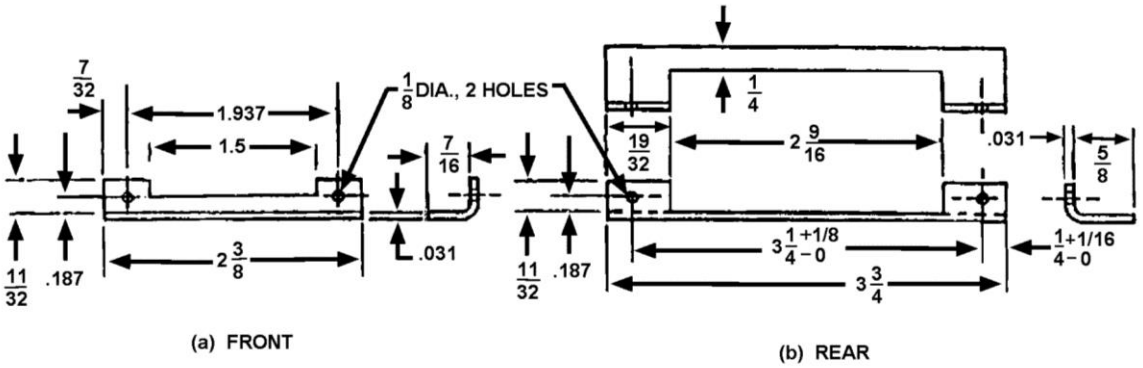

FIGURE 20. Universal battery contact connectors.

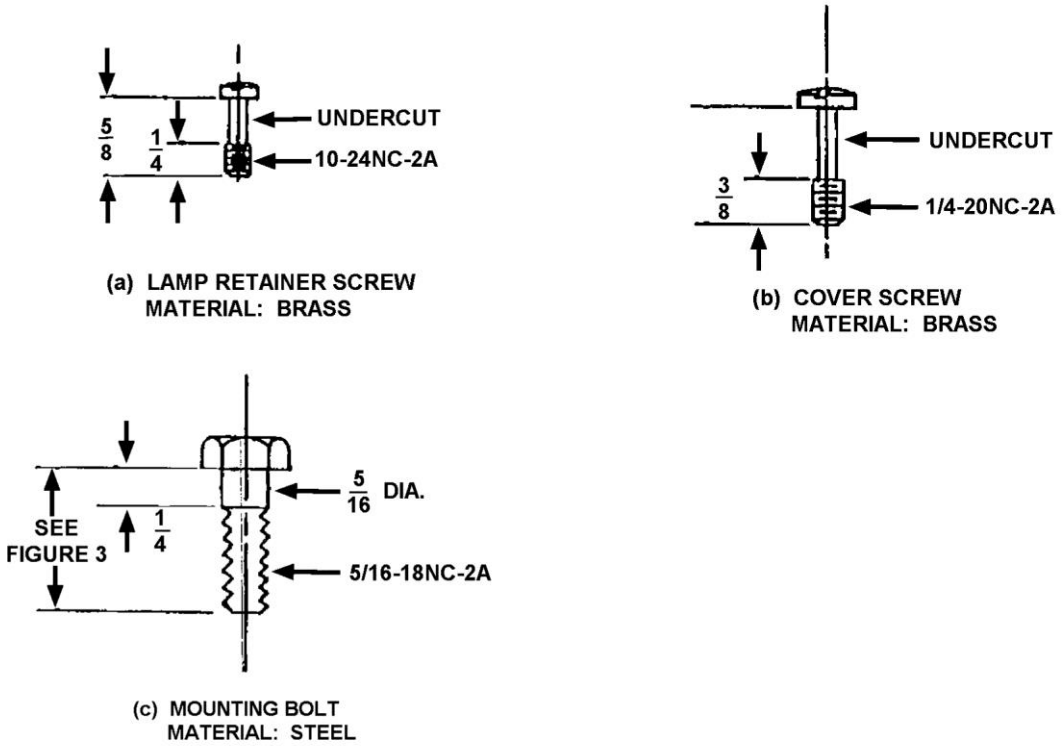

FIGURE 21. Universal screws and bolts.

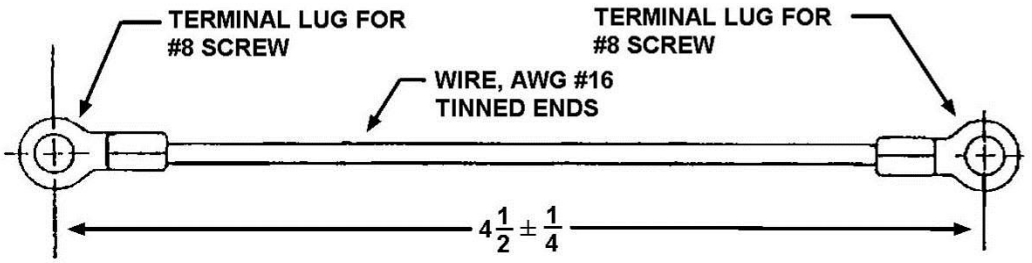

FIGURE 22. Universal wire assembly.

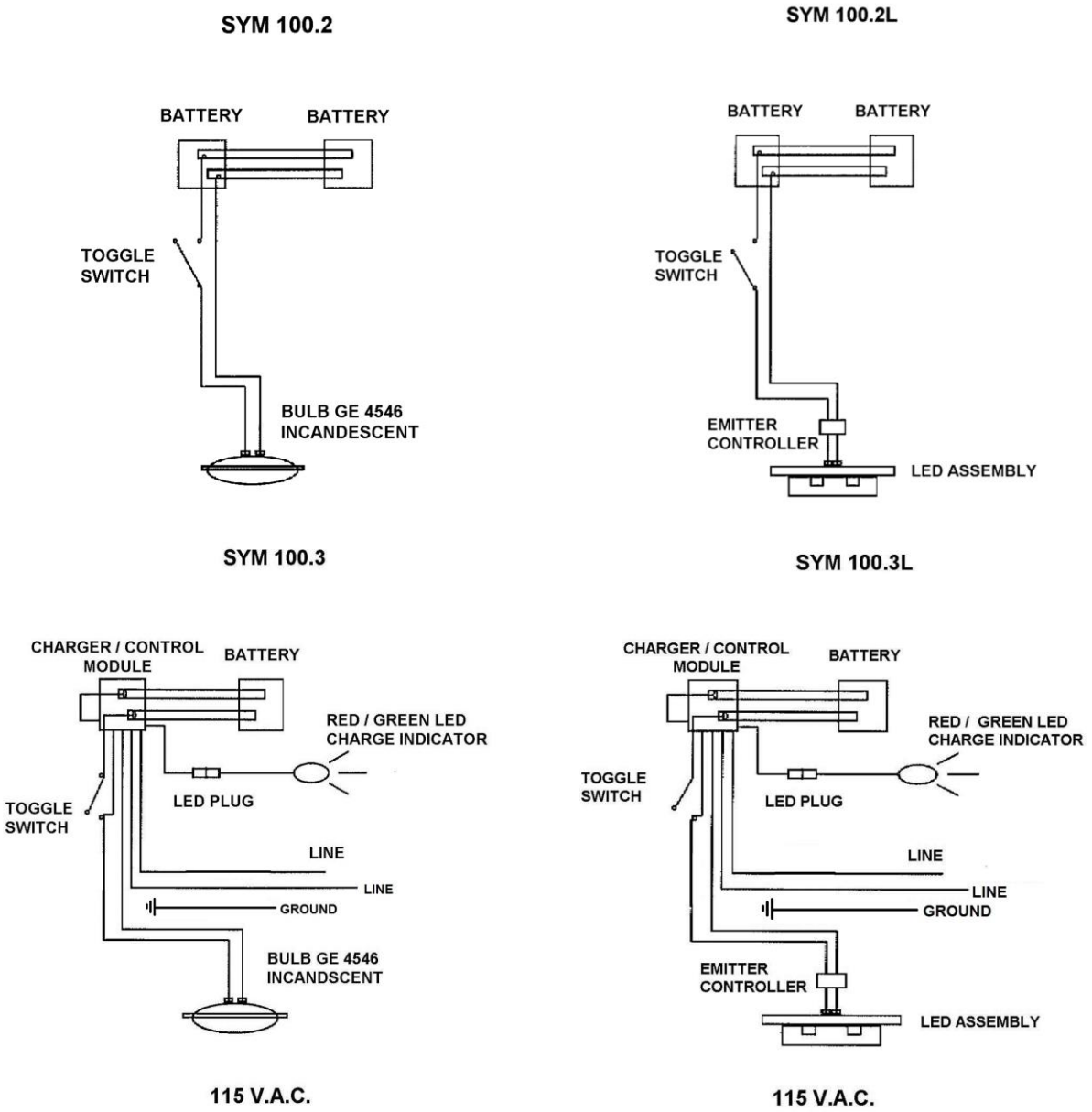

FIGURE 23. Wiring diagram.

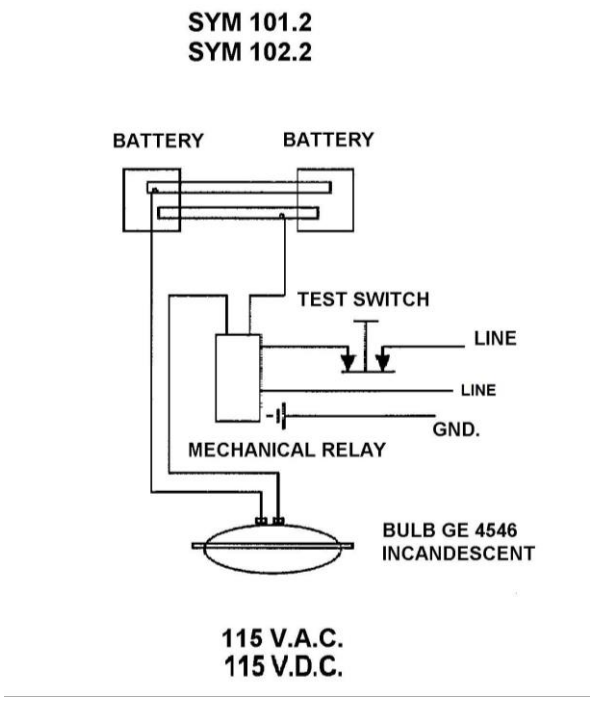

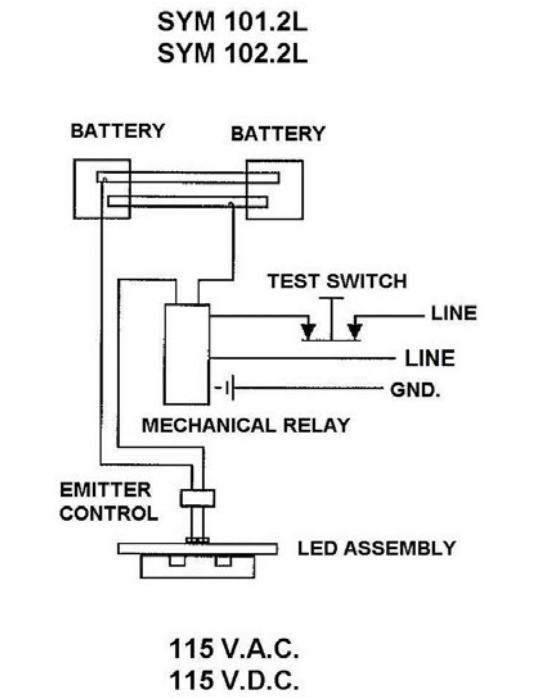

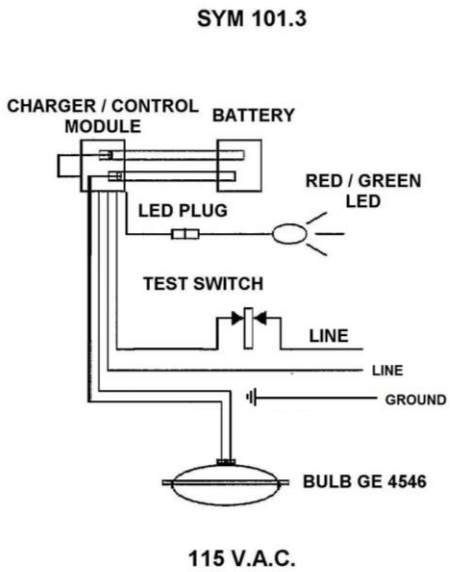

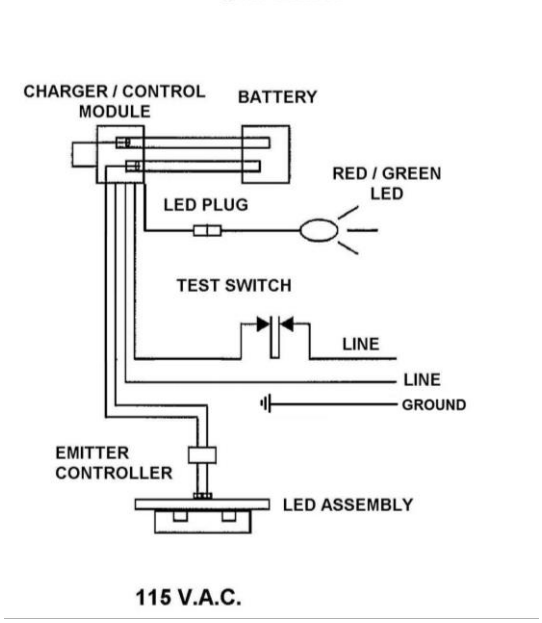

FIGURE 23. Wiring diagram - Continued.

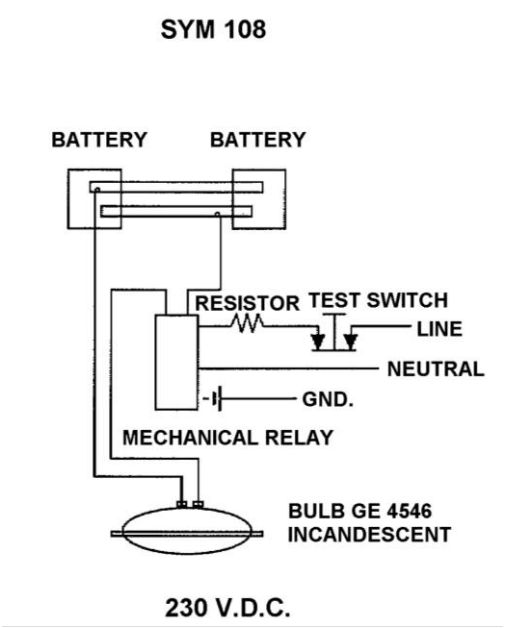

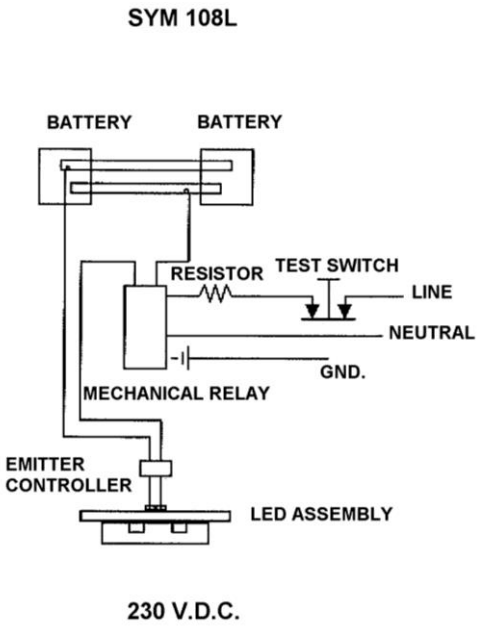

NOTE:

1. For Symbols 100.2, 100.2L, 101.2, 101.2L, 102.2, 102.2L, 108, and 108L lanterns, two non-rechargeable batteries are used. For Symbols 100.3, 100.3L, 101.3, and 101.3L lanterns, one charger/control module and one rechargeable battery are used.

FIGURE 23. Wiring diagram - Continued.

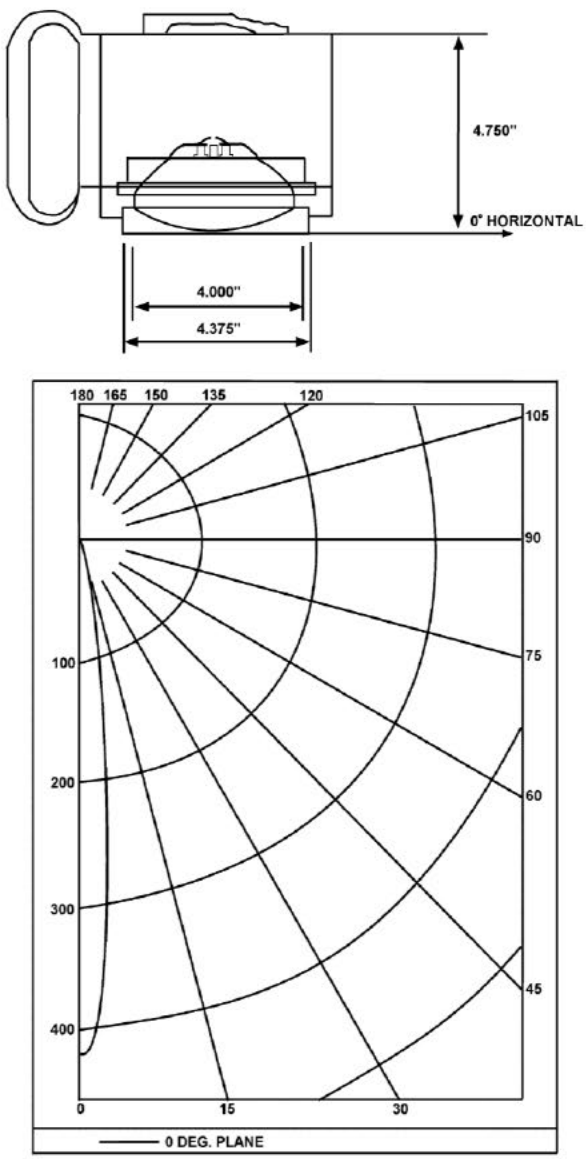

DEG	CANDELA	LUMENS
0	431	
5	242	20
15	45	13
25	6	3
35	2	2
45	1	1
55	0	0
65	0	0
75	0	0
85	0	0
90	0	

NOTE:

1. Test distance is 10 feet.

FIGURE 24. Incandescent photometric test set-up, resultant curve, and candela/lumen distribution.

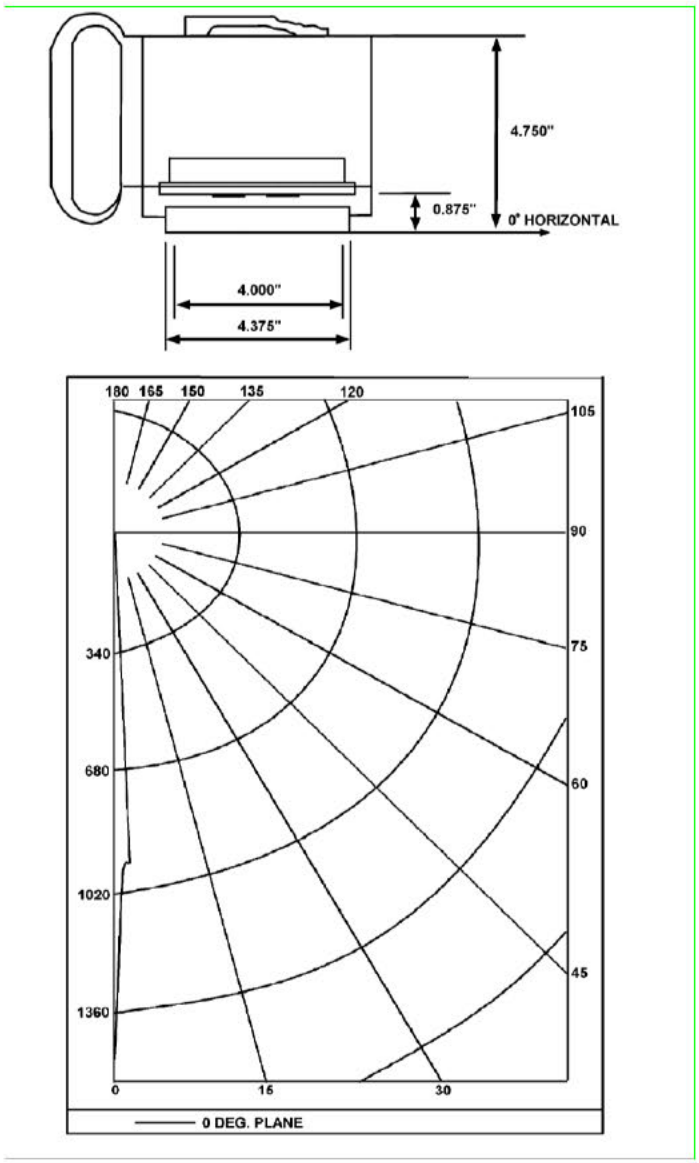

DEG	CANDELA	LUMENS
0	1593	
5	85	13
15	2	1
25	0	0
35	1	0
45	2	2
55	4	4
65	7	5
75	0	0
85	0	0
90	0	

NOTE:

1. Test distance is 10 feet.

FIGURE 25. LED photometric test set-up, resultant curve, and candela/lumen distribution.

REQUIREMENTS:

Type: II and III
Class: 1

SYMBOL NUMBERS:

100.2/100.2L:	Lantern, portable, with handle and mounting bracket/LED model.
100.3/100.3L:	Lantern, portable, rechargeable with handle and mounting bracket/LED model.
101.2/101.2L:	Lantern, bulkhead, relay, 115 VAC/LED model.
101.3/101.3L:	Lantern, bulkhead, rechargeable, 115 VAC/LED model.
102.2/102.2L:	Lantern, bulkhead, relay, 115 VDC/LED model.
108/108L:	Lantern, bulkhead, relay, 230 VDC/LED model.

DESIGN:

Dimensions and configurations:	See figures 1 through 23.
Material:	
Box, cover, lamp retainer:	Material for box and cover lamp retainer shall be molded plastic. The color of molded parts shall be yellow conforming to color number 13415 of FED-STD-595 attained without resort to painting, enameling, or other post-molding applications. Plastic material shall be in accordance with ASTM D5948 or one of the following: Floerite number X5064, Glaskyd number 1902, Plaskon number 446, Raflon number 1030, or equal.
Screws:	All screws shall be brass.
Lockwashers:	All lockwashers shall be phosphor-bronze, internal-lock.
Inserts:	All inserts shall be brass.
Lantern assembly (complete) and typical mounting:	See figures 1 and 2.
Body assembly:	See figure 3 and 4. All parts shown on figure 3 or 4 shall be furnished assembled as indicated.
Bolts:	Gaskets or bolts with self-contained gaskets shall be furnished so as to seal the mounting holes against the entrance of water where the body is assembled and mounted in the condition shown on figure 2.
Mounting bolts:	Mounting bolts shall be as shown on figures 3 and 21.
O-ring:	O-ring gaskets shall be furnished to seal the mounting holes against the entrance of water when the body is assembled and mounted in the condition shown on figure 2.
LED cluster description:	The LED cluster shall be balanced by electronic circuitry to provide evenly distributed light output in accordance with LED manufacturer specifications. The LED cluster shall also provide luminance equal to or greater than that included on figure 25. The LED cluster's power terminals or wiring, as appropriate, shall indicate polarity for proper installation.
Lamp:	Lamp shall be PAR-36 screw incandescent terminal lamp and provide luminance equal to or greater than that included on figure 24.
Lamp contact assembly:	See figure 19. The plunger shall work freely in the sleeve without rubbing or coming adrift.
Battery contact connectors:	See figure 20. Material shall be brass, half hard. Battery contact connectors shall be silver plated.
Box, cover and lamp-retainer:	See figures 12, 13, and 14, respectively.
Wire assembly:	See figure 22.
Gasket, lamp:	See figure 16. Material shall be neoprene rubber, 45-55 durometer A.
Gasket, cover:	See figure 18. Material shall be neoprene rubber, 45-55 durometer A.

Portable lantern handle assembly:	See figure 5 for Symbols 100.2 and 100.2L and figure 8 for Symbols 100.3 and 100.3L. All parts shown on figure 5 or figure 8 shall be furnished assembled as indicated.
Switch:	Switch shall be non-sparking and watertight toggle.
Boot:	Boot shall be in accordance with MIL-DTL-5423/2.
Gasket:	See figure 17. Material shall be neoprene rubber 45-55 durometer A.
Relay lantern top plate assembly:	See figure 6 for Symbols 101.2, 101.2L, 102.2, 102.2L, 108, and 108L. See figure 9 for Symbols 101.3 and 101.3L. All parts shown on figure 6 or figure 9 shall be furnished assembled as indicated.
Packing assembly:	Packing assembly shall be in accordance with ASTM F1836M.
Test switch:	Test switch shall be pushbutton, momentary, sealed, non-sparking or magnetic actuating, meeting the below requirements.
Electrical life:	25,000 cycles minimum
Mechanical life:	100,000 cycles minimum
Operating temperature:	32 to 185 °F (0 to 85 °C)
Boot:	Boot shall be Style 2, Size 3 of MIL-DTL-5423/7.
Gasket:	See figure 17. Material shall be neoprene rubber 45-55 durometer A.
Cable:	Cable shall be 10 feet of type LSTHOF-3 in accordance with MIL-DTL-24643/3.
Bracket assembly:	See figure 11. Material shall be steel; zinc plated.
Wire assembly:	See figure 22.
Ground connection:	The metal neck of the pushbutton switch and the relay metallic frame shall be electrically connected to the green lead of the supply cable for grounding to ship's structure.
Wiring:	Interconnecting and power leads shall be connected to relay and switch terminals using solder or crimp style connectors. Wire nuts shall not be used.
Insulating sleeve:	Shrink-on insulating sleeves shall be installed over all electrical connections carrying 120 or higher voltage. No metallic parts of such connections shall be exposed. Insulating sleeves shall not be loose or allowed to move. Insulating sleeves are not required for ground connections or electrical connections of the battery circuit.
Relay:	Relays shall conform to the design shown on figures 6 and 7 and to the tests of table II.
Rechargeable retrofit kit:	
Bulkhead mounted:	The rechargeable retrofit kit shall convert a bulkhead mounted Symbol 101.2 (non-rechargeable) lantern into a Symbol 101.3 (rechargeable) lantern. The rechargeable retrofit kit shall consist of a charger/control module, a rechargeable top plate (see figure 9) without cable, and the appropriate wiring and connectors. The rechargeable battery specified herein shall be acquired separate from the rechargeable retrofit kit. The configuration of the charger/control module and the rechargeable battery shall be such that they cannot be placed in the incorrect position.
Portable:	The rechargeable retrofit kit shall convert a portable Symbol 100.2 (non-rechargeable) lantern into a Symbol 100.3 (rechargeable) lantern. The rechargeable retrofit kit shall consist of a charger/control module, top handle assembly (see figure 8), and the appropriate wiring and connectors. The rechargeable battery specified herein shall be acquired separate from the rechargeable retrofit kit. The configuration of the charger/control module and the rechargeable battery shall be such that they cannot be placed in the incorrect position.

LED upgrade kit: The LED retrofit kit shall convert a Symbol 100.2, 100.3, 101.2, 101.3, 102.2, or 108 lantern into a Symbol 100.2L, 100.3L, 101.2L, 101.3L, 102.2L, or 108L (LED) lantern. The LED retrofit kit shall consist of plexiglass or plastic lens in accordance with MIL-E-917 and MIL-DTL-24191, an LED mounted on a backplate that will fit in place of the incandescent assembly. The assembly shall also provide a watertight seal to preserve the watertight integrity of the lantern.

Charger/control module (for Symbol 100.3, 100.3L, 101.3, and 101.3L only) [1/]:

Power input: 115 VAC.

High voltage cutoff: 6.9 V nominal.

Low voltage cutoff: 5.25 – 5.5 V nominal.

Maximum charging current: 500 mA.

Recharging activation: The charger/control module shall automatically initiate charging once the battery has less than 90 percent of full charge and 115 VAC power is restored.

Lantern activation:

Symbols 101.3 and 101.3L: The charger/control module shall automatically turn the lantern on when there is a loss of 115 VAC power and remain on until the battery reaches the low voltage cutoff.

Symbols 100.3 and 100.3L: The charger/control module shall turn the lantern on when the toggle switch is placed into the “on” position.

Maximum recharge time: 16 hours.

Electromagnetic interference: In accordance with RE101, RE102, CE101, and CE102 requirements of MIL-STD-461.

Terminals: Shall connect to/make contact with the existing battery contact connectors (see figure 20).

Dimensions: The charger/control module shall have identical dimensions of a Type BA-200/U battery in accordance with ANSI C18.1M.

Note: All electrical components contained in the charger/control module shall be completely sealed against gases and moisture.

Red/Green LED indicator (for Symbols 100.3, 100.3L, 101.3, and 101.3L):

The Red/Green LED indicator shall be mounted on the rechargeable top plate (Bulkhead Mount - see figure 9) and rechargeable handle assembly (Portable - see figure 8) such that it can be readily visible from the front of the lantern. The LED indicator shall have four modes of operation. No illumination shall be indicative of the absence of 115 VAC or a defective LED indicator. A solid green output shall indicate the battery is fully charged. A blinking green output shall indicate the battery is charging. A solid red output shall indicate a failed charging circuit. A blinking red output shall indicate a battery failure.

Wiring/connections (for Symbols 100.3, 100.3L, 101.3, and 101.3L):

Appropriate wiring for the charger/control module and the LED indicator assembly shall be supplied as part of the rechargeable retrofit kit. The connections between the power input leads and charger/control module and the connections between the LED indicator assembly and the charger/control module shall be made using crimp style connectors.

Time of lamp illumination (for Symbols 100.3, 100.3L, 101.3, and 101.3L):

Not less than 4 hours before the lantern reaches the low voltage cutoff of 5.25 – 5.5 V.

Batteries (for Symbols 100.2, 100.2L, 101.2, 101.2L, 102.2, 102.2L, 108, and 108L lanterns):

Lanterns shall accommodate two batteries in parallel, Type BA-200/U in accordance with ANSI C18.1M. Batteries are not furnished.

Rechargeable battery (for Symbols 100.3, 100.3L, 101.3, and 101.3L):

Rechargeable lanterns shall accommodate one rechargeable battery as specified herein. Batteries are not furnished with the rechargeable retrofit kit.

Type: Sealed, lead-acid, maintenance free.

Nominal voltage: 6.0 V.

Nominal capacity: 5.0 ampere-hours at 20-hour rate, load of 200 mA.
4.0 ampere-hours at 6-hour rate, load of 500 mA.

Terminals: Two coil springs, for contact with the existing battery contact connectors (see figure 20).

End of discharge voltage: 5.5 V nominal.

Self-discharge per month at 68 °F (20 °C): Not greater than 3 percent.

Operating temperature range: 0 to 122 °F (-17.78 to 50 °C).

Cycle life (at 500 mA, at 100 percent depth of discharge): Not less than 800 cycles before battery is down to 80 percent of rated capacity.

Capacity loss per 100 cycles: Not greater than 2.5 percent.

Dimensions: The rechargeable battery shall have the identical dimensions of a BA-200/U Type battery of ANSI C18.1M.

Enclosure: Watertight-complete lanterns.

Operating temperature: Not greater than 122 °F (50 °C).

Weight:

Symbols 100.2 and 100.2L: 5 pounds 9 ounces maximum without batteries.

Symbols 101.2, 101.2L, 102.2, 102.2L, 108, and 108L: 6 pounds 8 ounces maximum without batteries.

Symbols 100.3, 100.3L, 101.3, and 101.3L: 10 pounds 8 ounces maximum with rechargeable battery, charger/control module and handle on top plate, with the Red/Green battery status LED indicator installed.

Labels: Labels shall be furnished in accordance with MIL-DTL-16377. The following labels and information shall be furnished.

Type I – See MIL-DTL-16377.

Type III – Wiring diagram of figure 23.

Type IV – "USE FOLLOWING REPAIR PARTS:

Lamp	PAR-36
Boot for toggle switch	M5423/02
Boot for pushbutton switch	M5423/07-03
Toggle switch	MS16656-2
Pushbutton switch	M16377/53-015"

EXAMINATION AND TESTS:

Examination and tests shall be as specified in MIL-DTL-16377 and as follows:

First article inspection:

Body assembly:	See table II.
Handle assembly:	See table II.
Rechargeable handle assembly:	See table II.
Rechargeable retrofit kit:	See table II.
LED upgrade kit:	See table II.
Bracket assembly:	Examination only.

Conformance:

Comparison inspection:	Same as first article inspection.
Conformance inspection:	See MIL-DTL-16377.

GENERAL INFORMATION:

Assignment of military part numbers and general information is shown in table III.

TABLE II. Required first article testing for battle lanterns. 1/

Test	Requirement	Test Method	Remarks
Dielectric withstanding voltage	3.6.15	4.8.2	2/, 3/
Insulation resistance	3.6.16	4.8.3	2/, 3/
Enclosure effectiveness	3.5.11	4.8.14.4	2/, 4/
High impact shock	3.5.12	4.8.7	Grade A, 2/
Vibration	3.5.13	4.8.8	2/
Enclosure effectiveness	3.5.11	4.8.14.4	2/, 4/
Dielectric withstanding voltage	3.6.15	4.8.2	2/
Insulation resistance	3.6.16	4.8.3	2/
Mechanical shock	3.7.7.6	4.8.17.3	5/
Thermal shock (glassware/plastics)	3.7.7.7	4.8.17.4	5/
Power interface	3.6.18	4.8.21	3/
Light output	3.7.1	4.8.6.1	figure 22 and figure 23
Electromagnetic interference	3.6.14	4.8.16	6/

NOTES:

1/ Requirement and test method paragraph numbers refer to MIL-DTL-16377.

2/ In accordance with 4.3.1 of MIL-DTL-16377, tests shall be performed on one luminaire in the order specified.

3/ Test required only for Symbols 100.3, 100.3L, 101.2, 101.2L, 101.3, 101.3L, 102.2, 102.2L, 108, and 108L.

4/ Watertight.

5/ Only for LED lens regardless of lens material.

6/ Charger/control module only. Only tests RE 101, RE 102, CE 101, and CE 102.

TABLE III. Part number and general information.

Military Part Number M16377/53	Item Name	National Stock Number (NSN)	Remarks
-100.2	Complete lantern, Symbol 100.2		1/, 2/
-101.2	Complete lantern, Symbol 101.2		1/, 3/
-102.2	Complete lantern, Symbol 102.2		1/, 4/
-108	Complete lantern, Symbol 108		1/, 5/
-100.3	Complete lantern, Symbol 100.3		1/, 6/
-101.3	Complete lantern, Symbol 101.3		1/, 7/
001	Body assembly	6230-00-783-6519	
002	Handle assembly	5340-00-776-5920	
003	Bracket assembly	6230-00-968-7831	
004	115 VAC relay assembly	5945-00-783-6251	
005	115 VDC relay assembly	5945-00-783-6252	
006	220 VDC relay assembly	5945-00-783-6253	
007	Cover gasket, figure 18	5330-01-346-8127	
008	Rechargeable retrofit kit - Bulkhead	6220-01-481-3827	Includes rechargeable top plate assembly
009	Rechargeable battery	6140-01-463-4470	Purchased separately
010	LED upgrade kit - White	6230-01-531-7844	
011	Rechargeable retrofit kit - Portable		Includes rechargeable handle assembly
012	Rechargeable Handle Assembly		Included in rechargeable retrofit kit Portable
013	115 VAC Rechargeable; top plate assembly		Included in rechargeable retrofit kit Bulkhead
014	LED upgrade kit - Red	6230-01-531-7845	
015	Switch, pushbutton		

NOTES:

1/ Lanterns are not furnished as complete units. Complete lanterns shall be assembled using the component parts indicated.

a. Lanterns are intended to be mounted onboard ship as shown on figure 2.

b. Lanterns over surgical tables onboard ship are intended to be mounted using the adjustable bracket shown on MIL-F-16377/55.

c. Color filters, MIL-F-16377/43, shall be used to convert white (clear) light incandescent lanterns into colored light lanterns.

2/ Symbol 100.2 consists of part numbers: M16377/53-001, M16377/53-002, M16377/53-003, and M16377/53-013/014 if LED (LED becomes Symbol 100.2L).

3/ Symbol 101.2 consists of part numbers: M16377/53-001, M16377/53-004, and M16377/53-013/014 if LED (LED becomes Symbol 101.2L).

4/ Symbol 102.2 consists of part numbers: M16377/53-001, M16377/53-005, and M16377/53-013/014 if LED (LED becomes Symbol 102.2L).

5/ Symbol 108 consists of part numbers: M16377/53-001, M16377/53-006, and M16377/53-013/014 if LED (LED becomes Symbol 108L).

6/ Symbol 100.3 consists of part numbers: M16377/53-001, M16377/53-003, M16377/53-009, M16377/53-010, and M16377/53-013/014 if LED (LED becomes Symbol 101.3L).

7/ Symbol 101.3 consists of part numbers: M16377/53-001, M16377/53-008, M16377/53-009, and M16377/53-013/014 if LED (LED becomes Symbol 101.3L).

CHANGES FROM PREVIOUS ISSUE: Marginal notations are not used in this revision to identify changes with respect to the previous issue due to the extent of the changes.

Custodians:
Army – AV
Navy – SH

Preparing activity:
Navy – SH
(Project 6230-2014-007)

NOTE: The activities listed above were interested in this document as of the date of this document. Since organizations and responsibilities can change, you should verify the currency of the information above using the ASSIST Online database at https://assist.dla.mil.