Downloaded from http://www.everyspec.com

INCH-POUND
MIL-DTL-16377/53B(SH)
25 November 1996
SUPERSEDING
MIL-F-16377/53A(SH)
9 December 1988

DETAIL SPECIFICATION SHEET

FIXTURES, INCANDESCENT, DETAIL LIGHTING, LANTERN, HAND, PORTABLE AND RELAY WATERTIGHT SYMBOLS 100.2, 101.2, 101.3, 102.2, AND 108

This specification is approved for use by the Naval Sea Systems Command, Department of the Navy, and is available for use by all Departments and Agencies of the Department of Defense.

The requirements for acquiring the product described herein shall consist of this specification and MIL-F-16377.

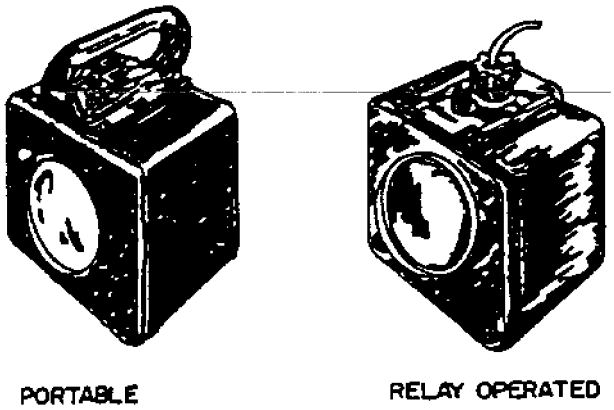

FIGURE 1. Lanterns, hand, portable and relay.

NOTES:
1. Unless otherwise specified, all dimensions are in inches on figures 3 through 19.

AMSC N/A FSC 6230
DISTRIBUTION STATEMENT A. Approved for public release; distribution is unlimited.

Downloaded from http://www.everyspec.com

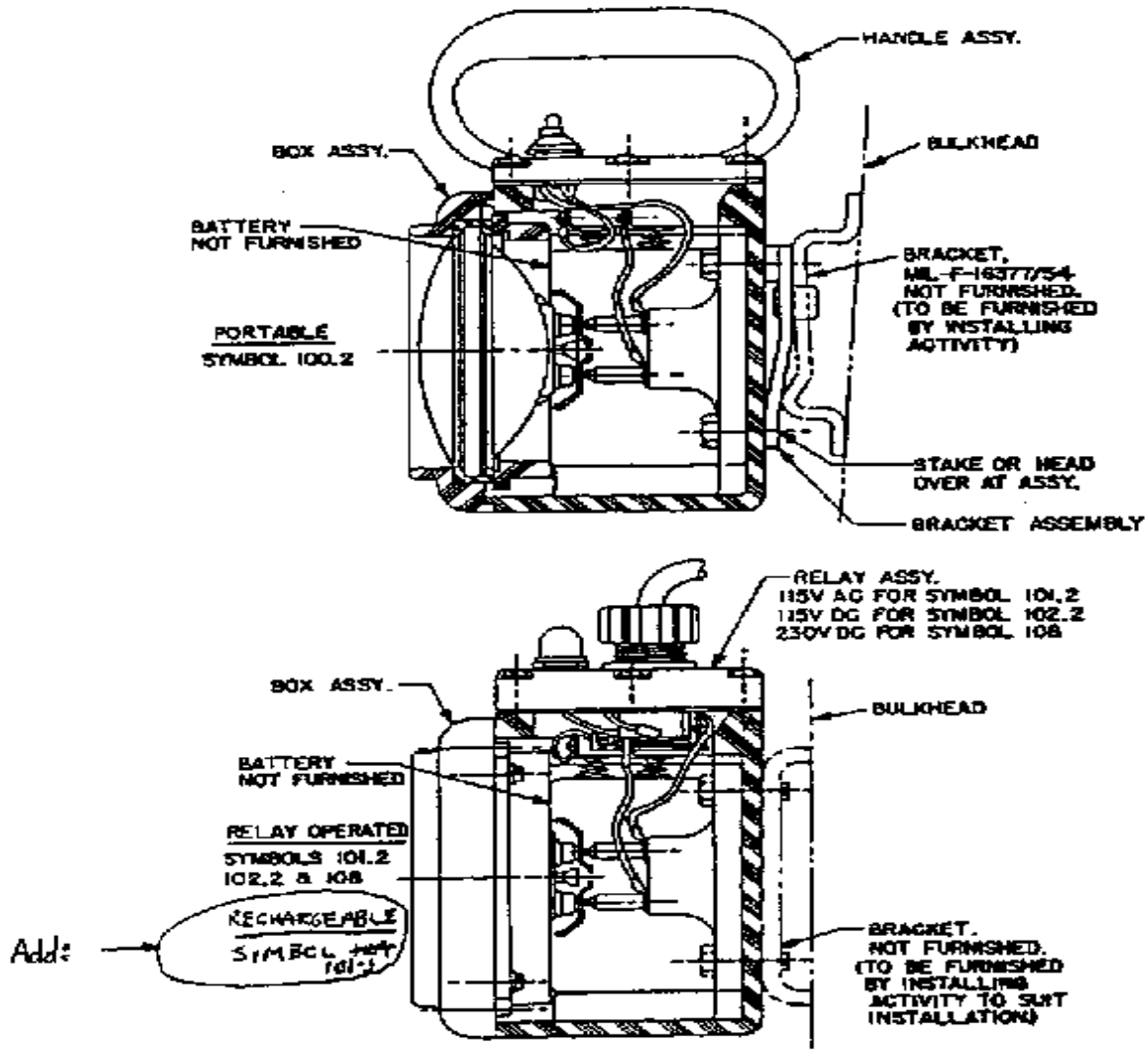

NOTES:

1. For Symbol 101.3 lanterns, the relay assembly is removed since the charger/control unit replaces the function of the relay assembly. For Symbol 101.3 lanterns, the relay housing is replaced with a new relay housing with an LED assembly mounted on the relay housing towards the front of the lantern near the test switch.

FIGURE 2. Lantern assembly and typical mounting.

Downloaded from http://www.everyspec.com

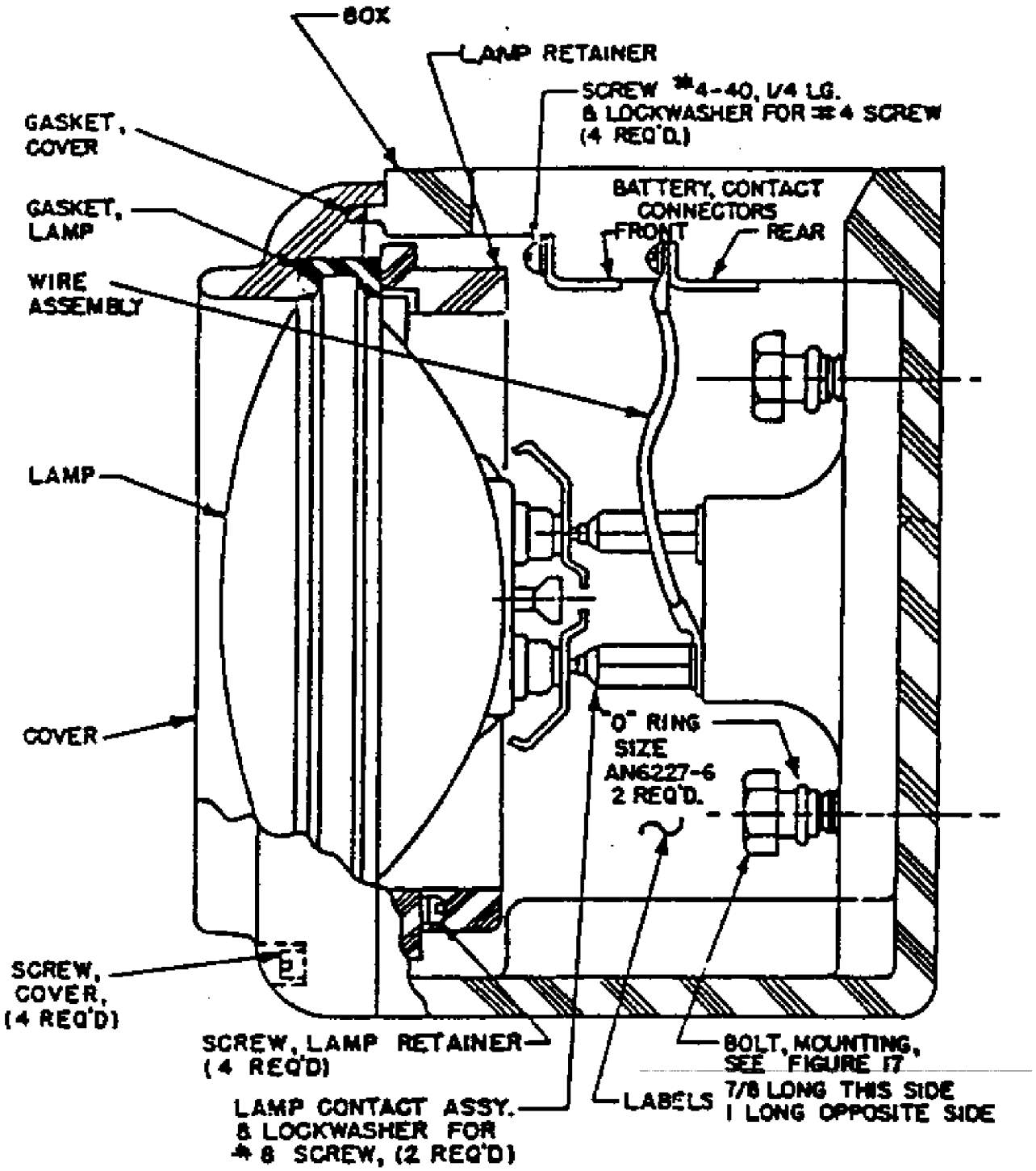

FIGURE 3. Body assembly.

Downloaded from http://www.everyspec.com

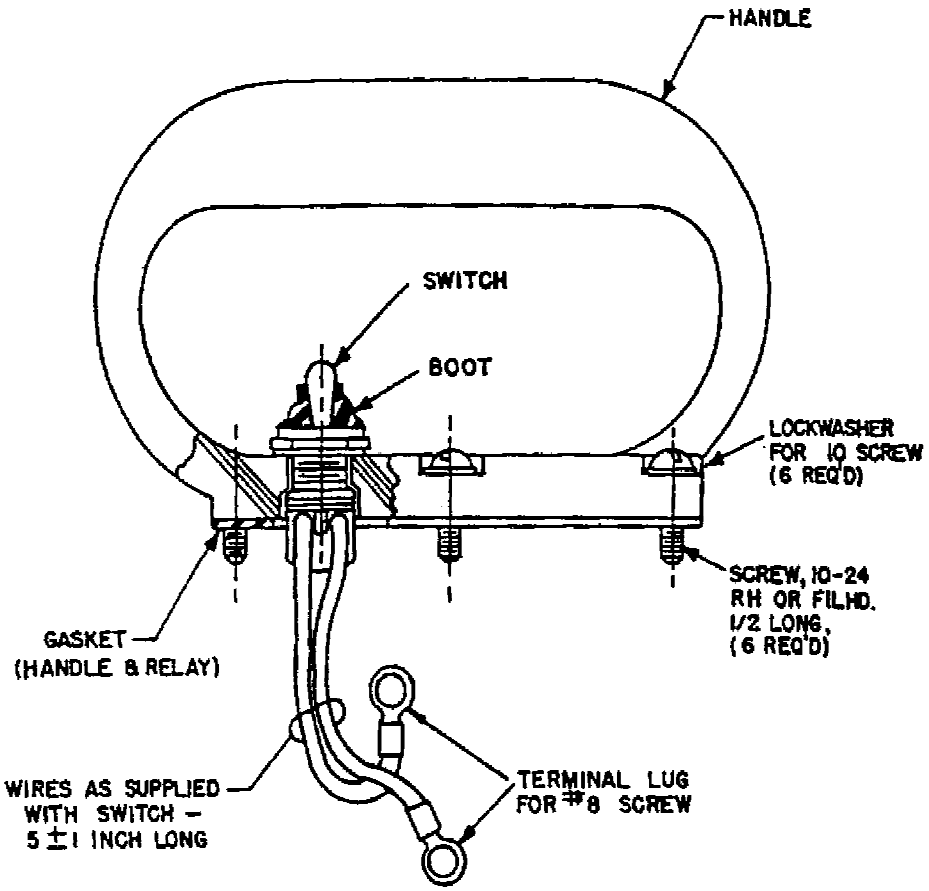

NOTES:

1. See figure 20 for wiring diagram.

FIGURE 4. Handle assembly.

Downloaded from http://www.everyspec.com

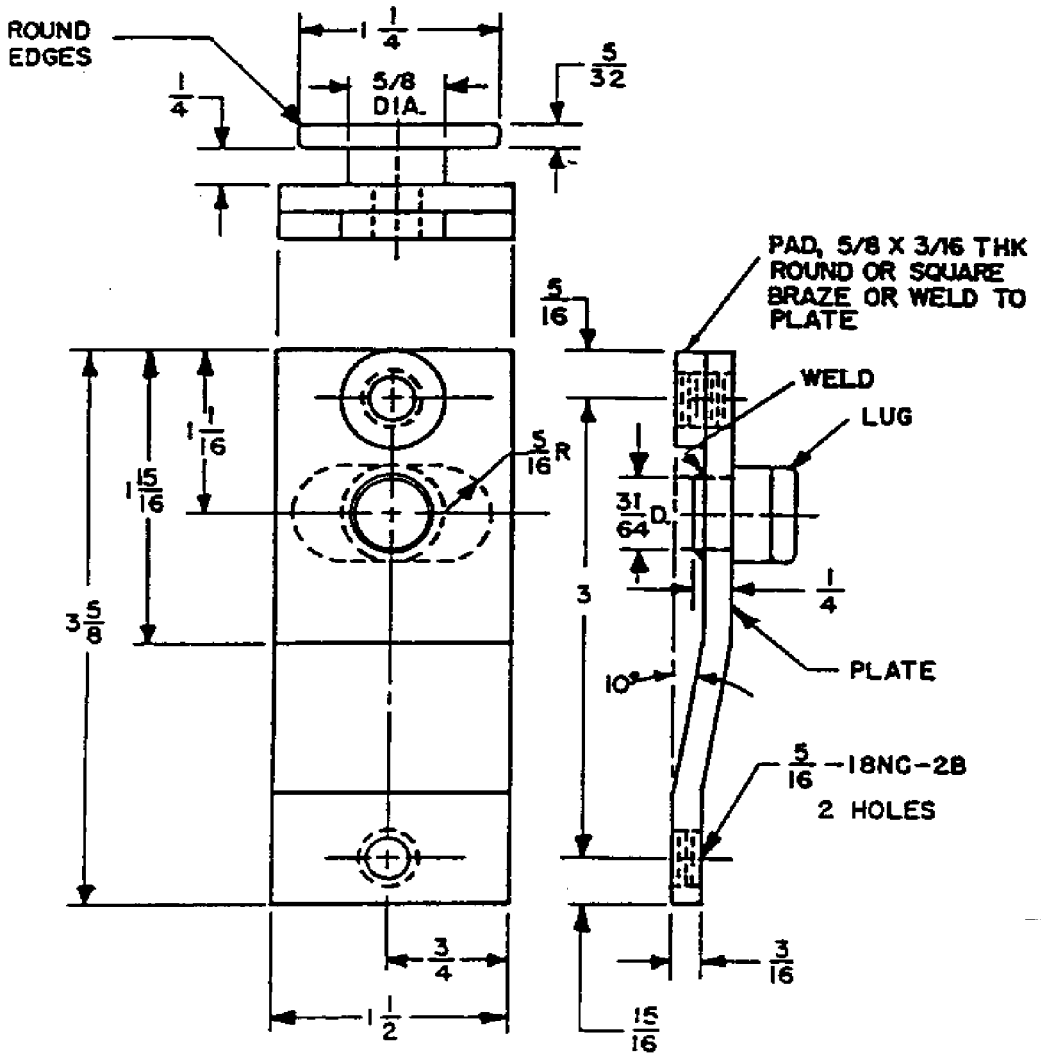

FIGURE 5. Bracket assembly.

Downloaded from http://www.everyspec.com

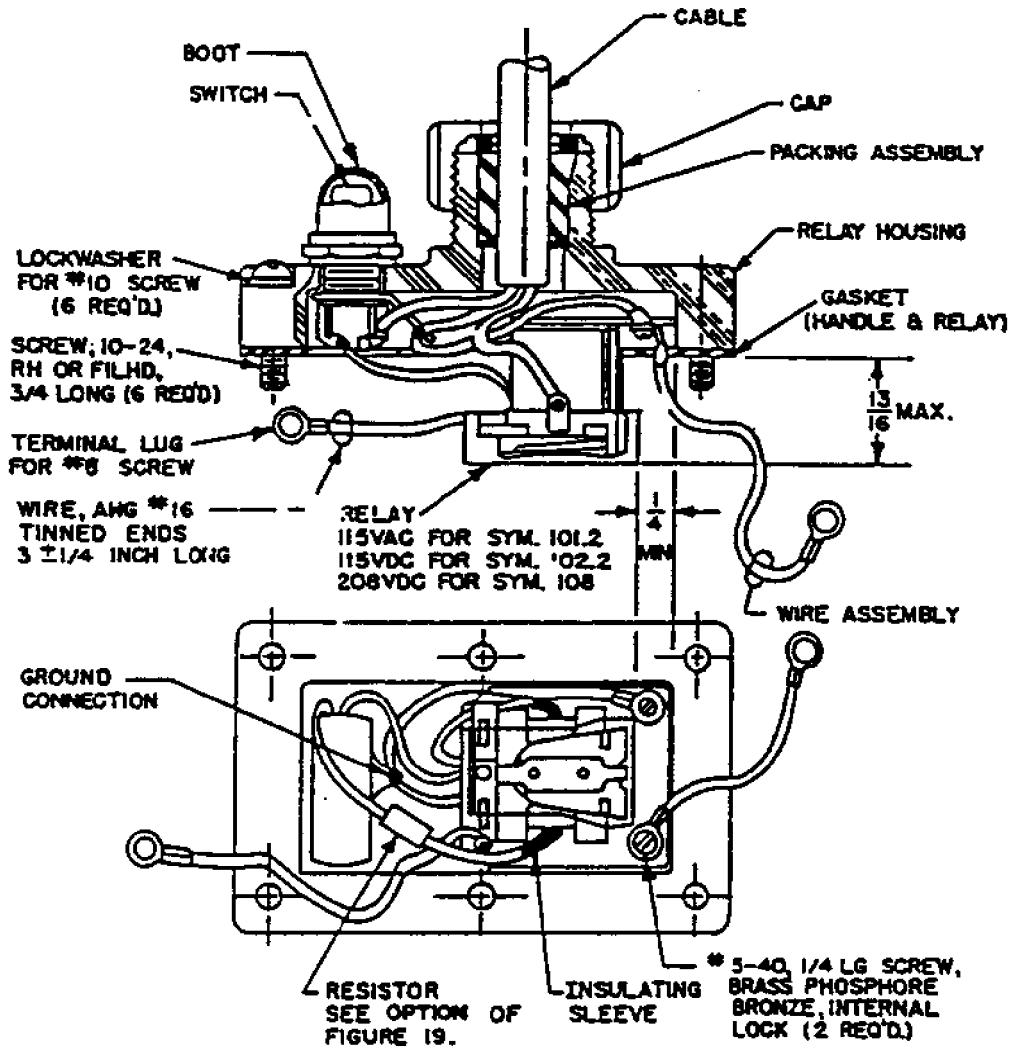

NOTES:

1. See figure 20 for wiring diagram.

FIGURE 6. Relay assembly.

Downloaded from http://www.everyspec.com

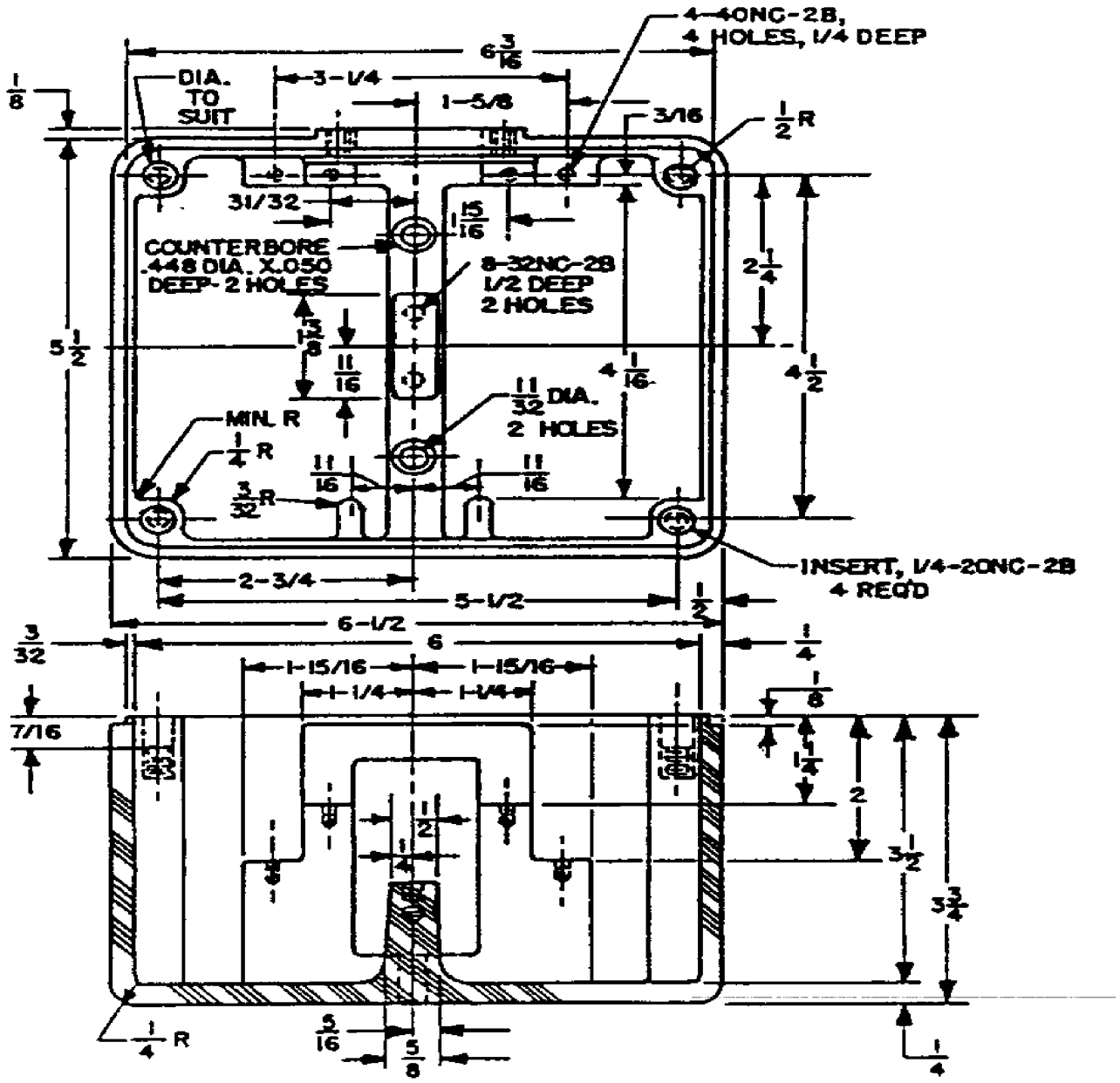

FIGURE 7. Box.

Downloaded from http://www.everyspec.com

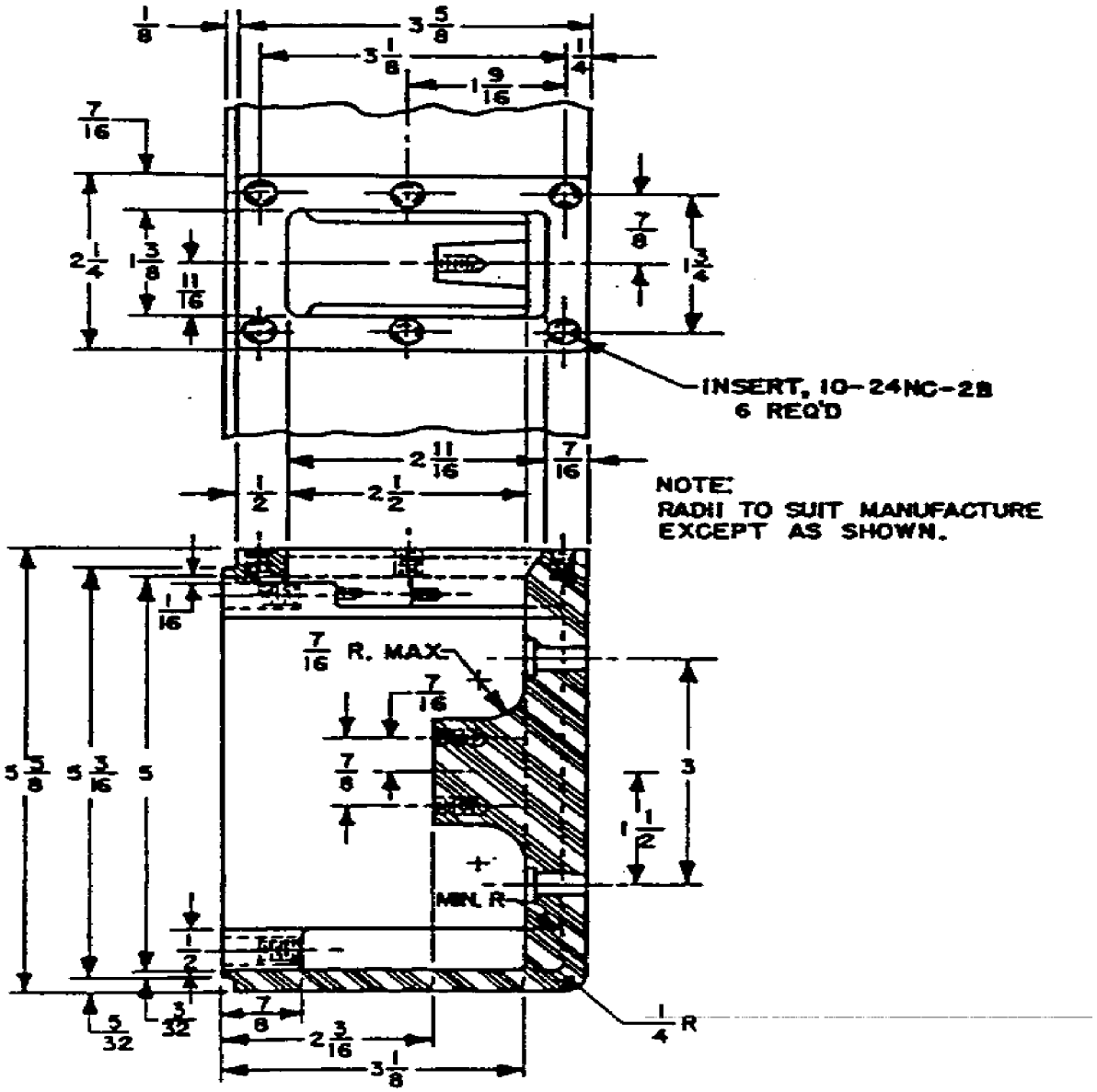

FIGURE 7. Box - Continued.

Downloaded from http://www.everyspec.com

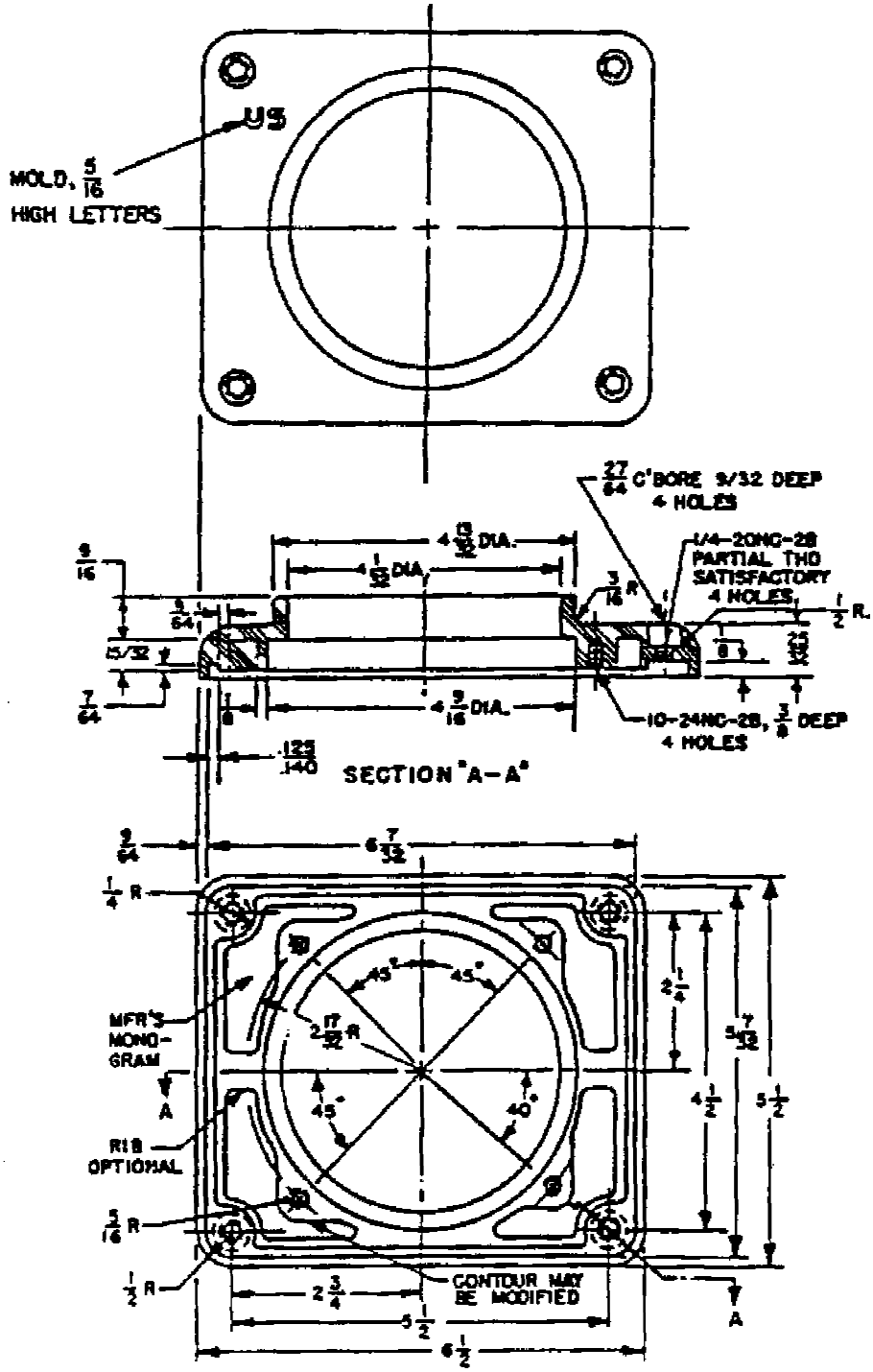

FIGURE 8. Cover.

Downloaded from http://www.everyspec.com

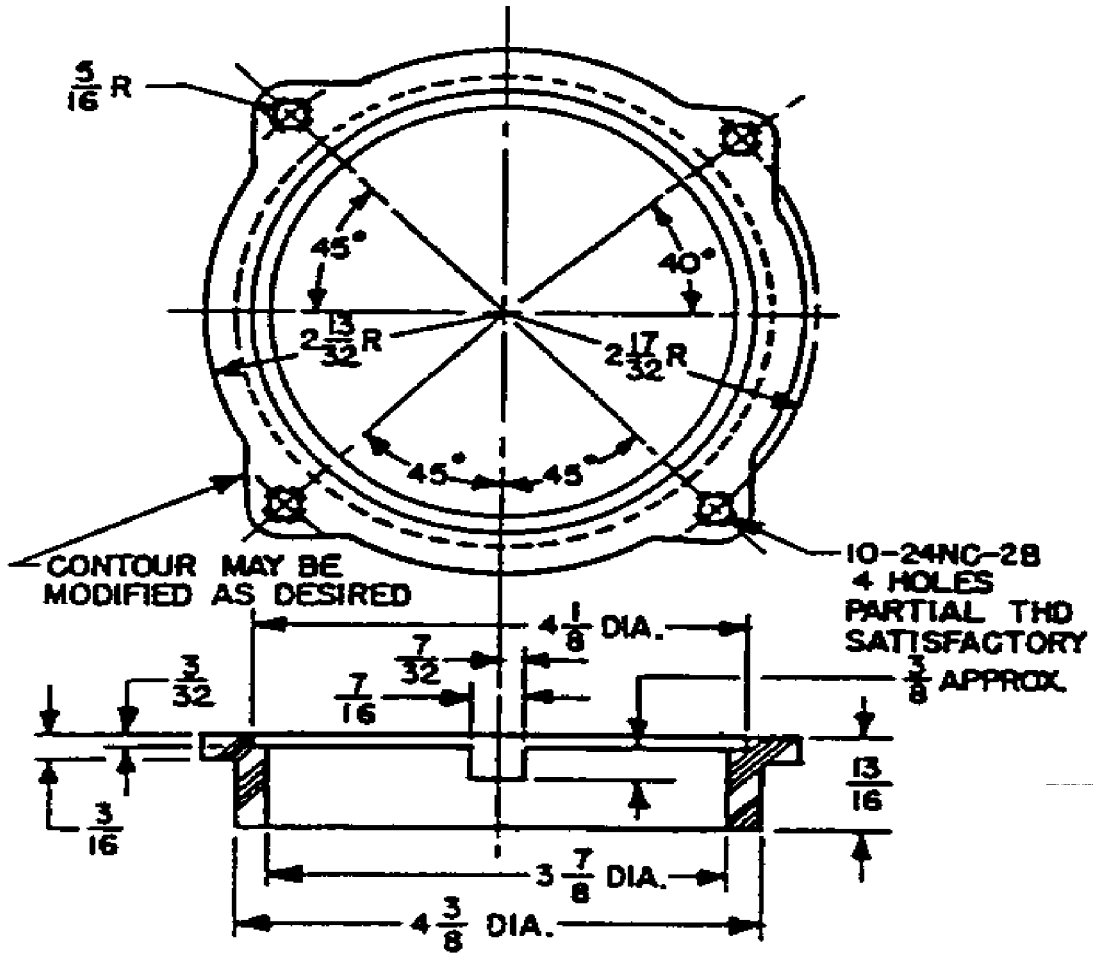

FIGURE 9. Lamp retainer.

Downloaded from http://www.everyspec.com

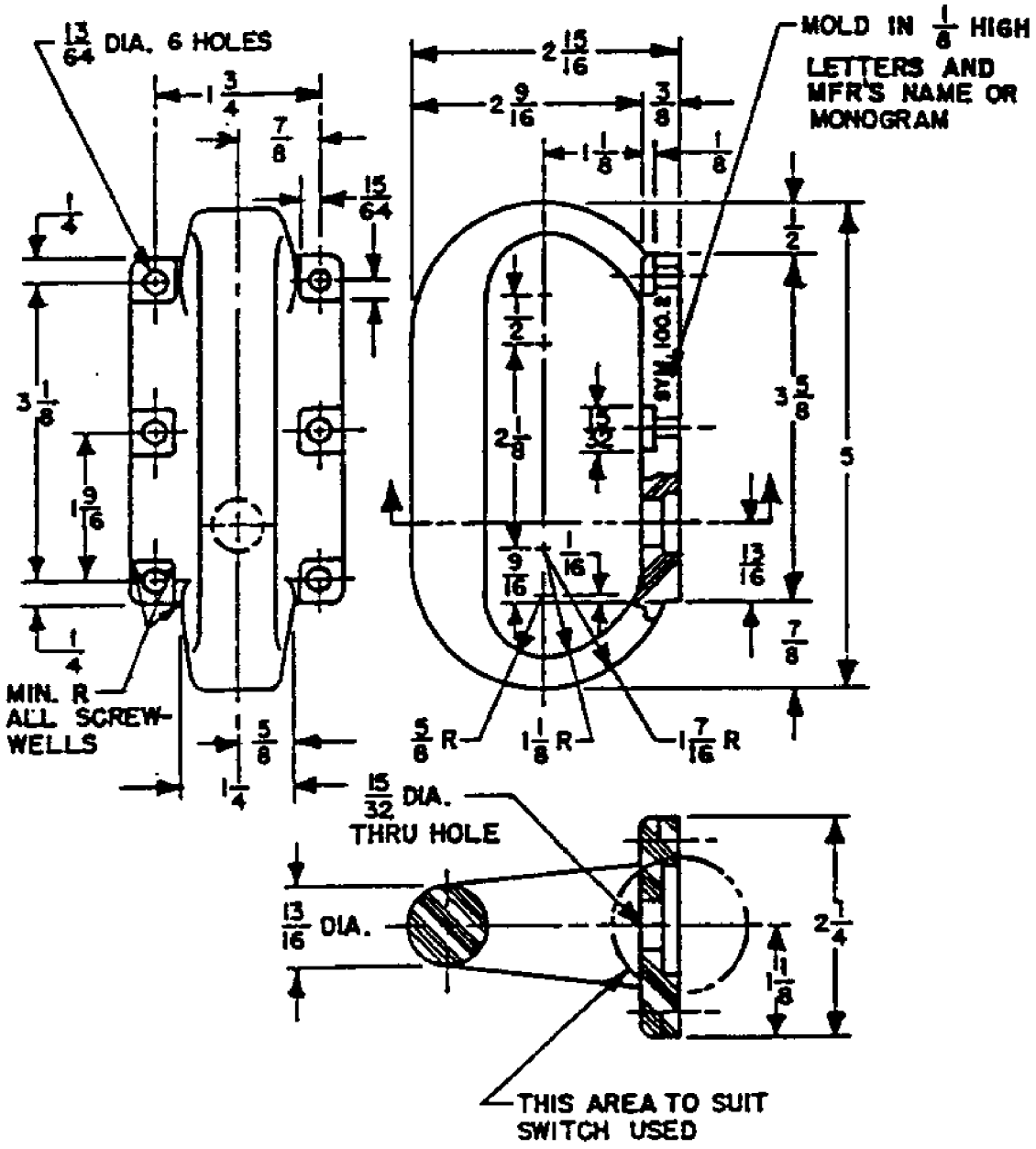

FIGURE 10. Handle.

Downloaded from http://www.everyspec.com

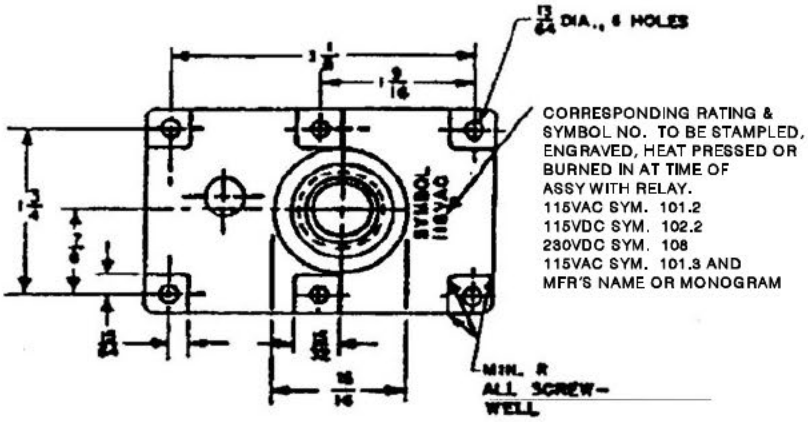

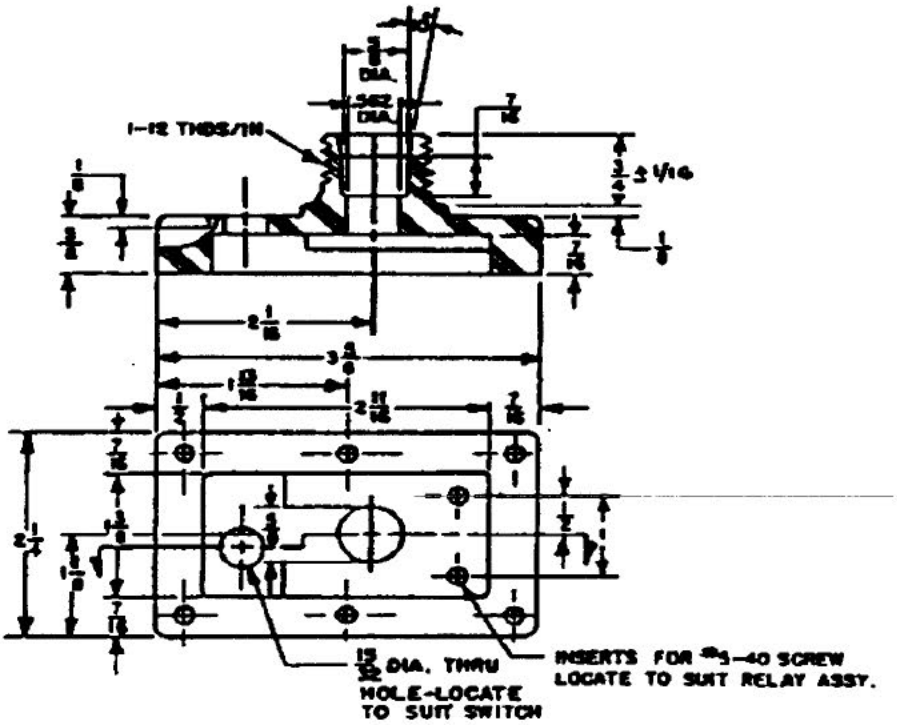

NOTES:

1. For Symbol 101.3 lanterns, the LED assembly shall be mounted on the relay housing towards the front of the lantern and near the test switch. For mounting the LED assembly, approximately a 1/4- inch hole is required.

FIGURE 11. Relay housing.

Downloaded from http://www.everyspec.com

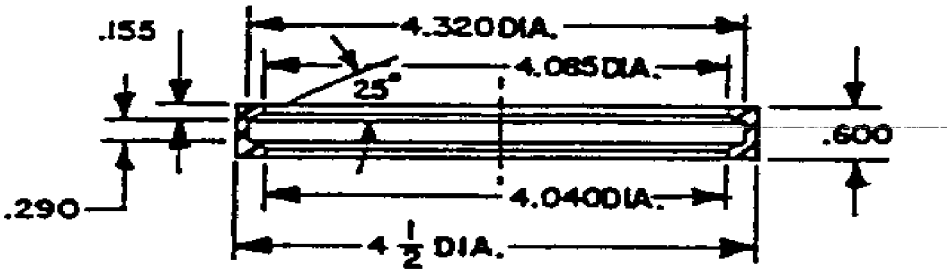

FIGURE 12. Gasket, lamp.

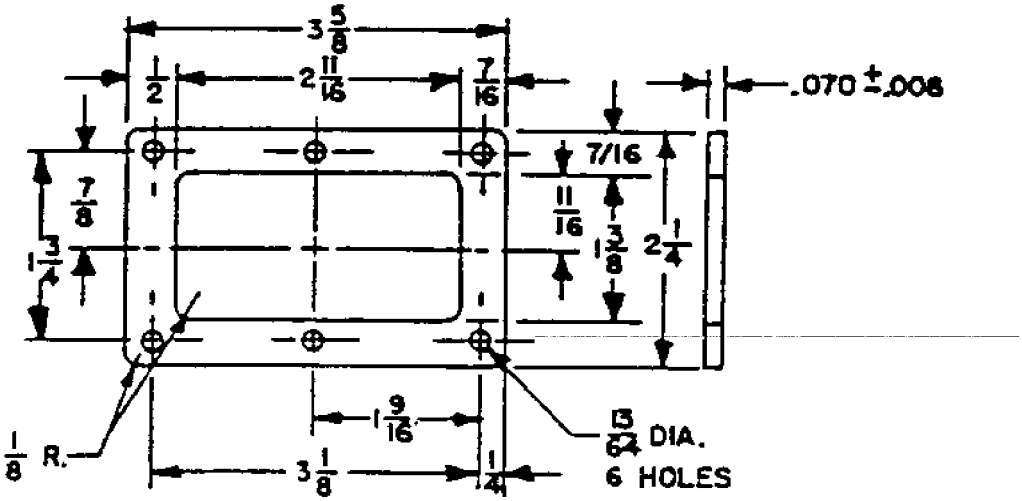

FIGURE 13. Gasket handle and assembly.

Downloaded from http://www.everyspec.com

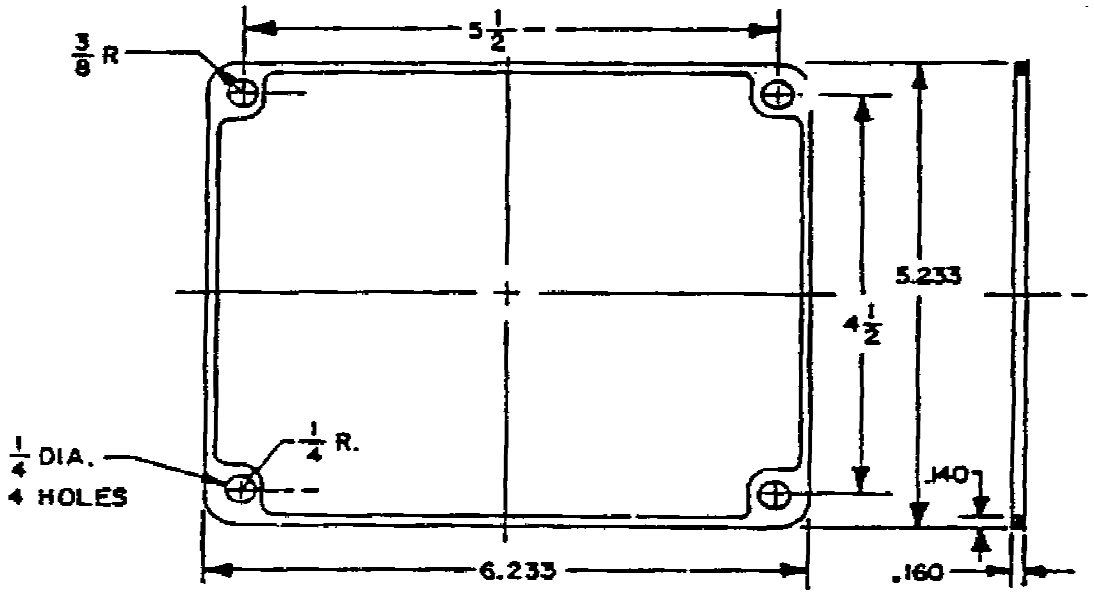

FIGURE 14. Gasket, cover.

Downloaded from http://www.everyspec.com

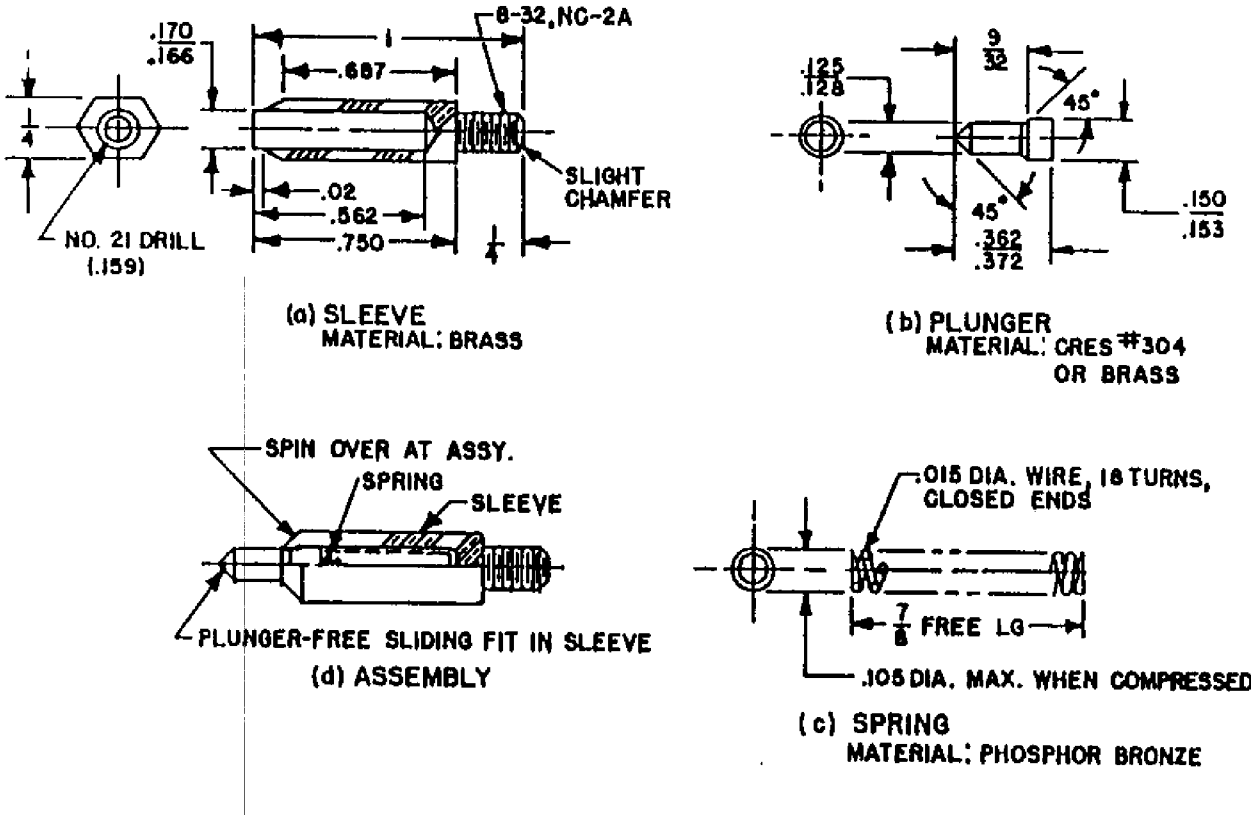

FIGURE 15. Lamp contact assembly.

Downloaded from http://www.everyspec.com

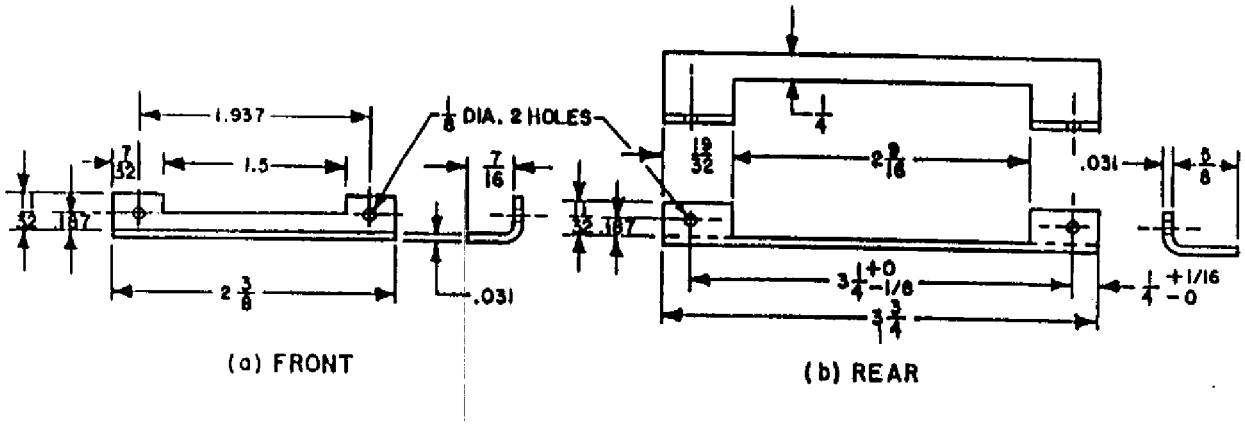

FIGURE 16. Battery contact connectors.

Downloaded from http://www.everyspec.com

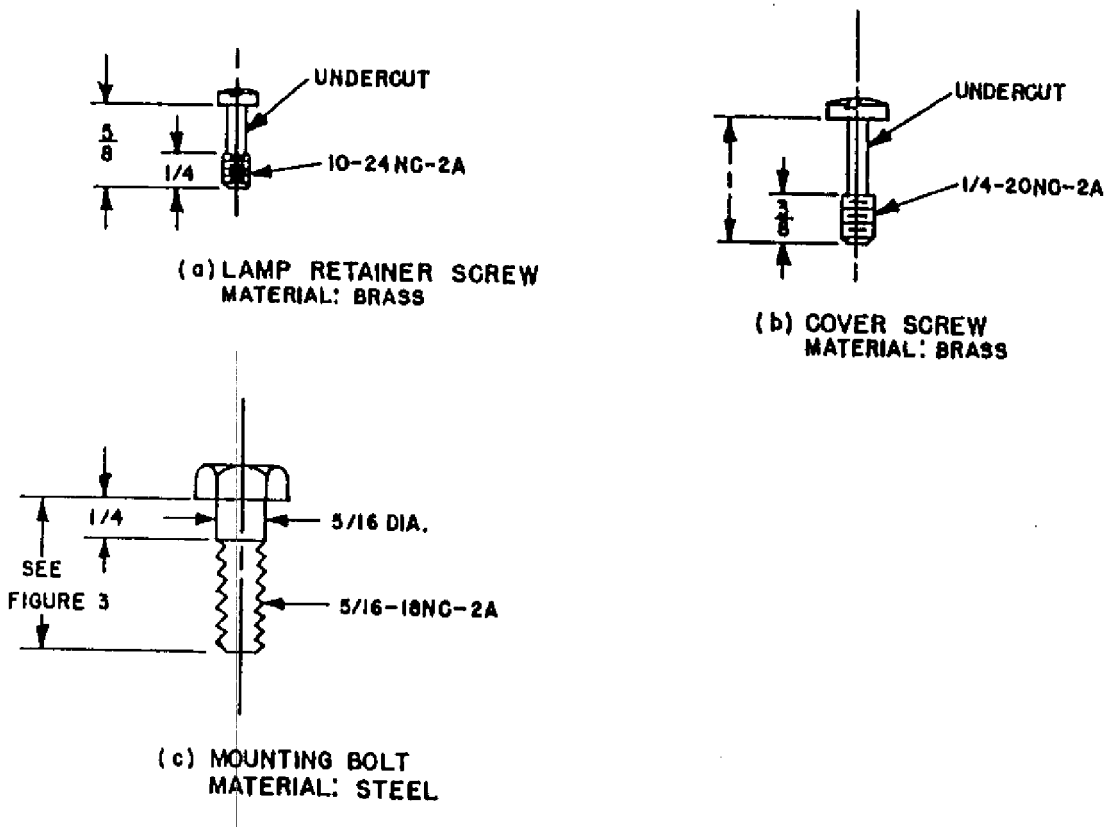

FIGURE 17. Screws and bolts.

Downloaded from http://www.everyspec.com

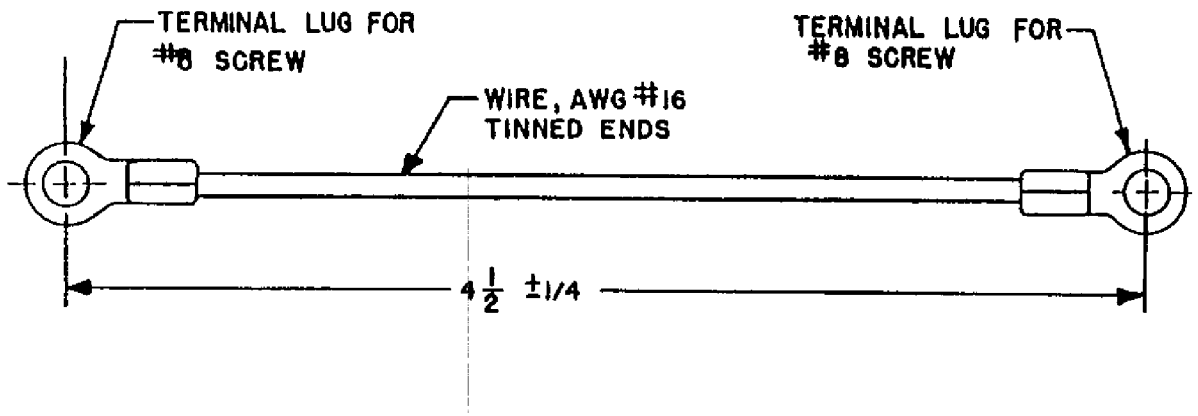

FIGURE 18. Wire assembly.

Downloaded from http://www.everyspec.com

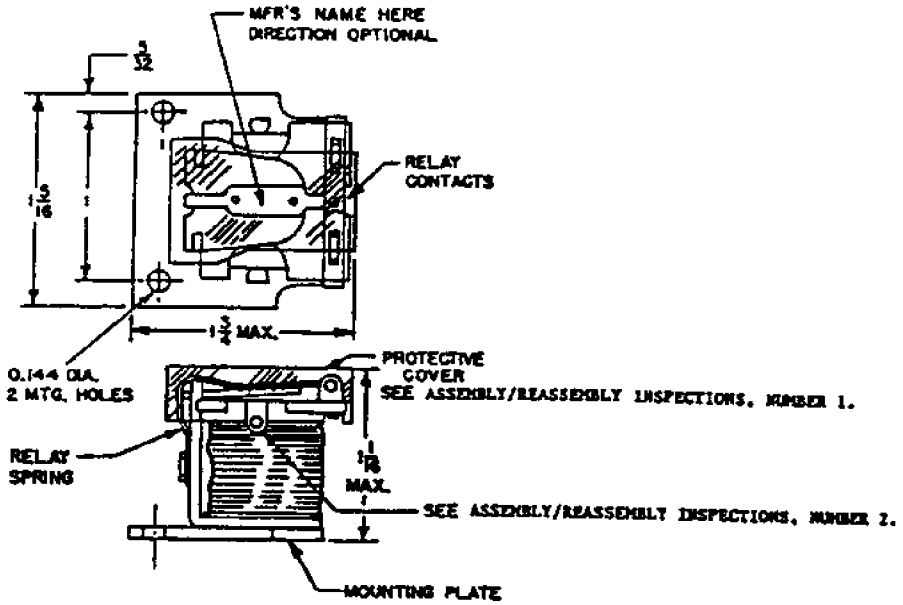

TABLE I. Relay contact and coil ratings.

Characteristic	115 Vac	115 Vdc	230 Vdc (see option)
Frequency	60 Hz	---	---
Duty	Continuous	Continuous	Continuous
Operating voltage	125 max	125 max	250 max
Coil rating	115 volts	115 volts	230 volts
Pull-in voltage	70-30 min	70-30 min	140-60 min
Contact rating	2 amps, 6 volts	2 amps, 6 volts	2 amps, 6 volts
Service life	100,000 cycles	100,000 cycles	100,000 cycles
Contact resistance	0.1 ohm max	0.1 ohm max	0.1 ohm max
Insulation resistance	100 megohms min	100 megohms min	100 megohms min
Dielectric strength	1000 V rms	1000 V rms	1000 V rms
Coil resistance	3000 ohms	12,000 ohms	See option

FIGURE 19. Relay.

Downloaded from http://www.everyspec.com

WIRING DIAGRAM:

1. See figure 20.

OPTION:

1. For 230 Vdc operation, the 115-Vdc relay with 12,000 ohm, 2 watt resistor in series with coil may be used.

REQUIREMENTS:

1. Relays shall conform to the design shown and to the following tests:

   (a) Insulation resistance - 100 megohms minimum between coil and contacts and to ground (moving contact grounded).
   (b) Dielectric - 500 Vac rms between contacts, 1000 Vac rms between coil and contacts and coil to ground.
   (c) Contact resistance - 0.1 ohm maximum.
   (d) Contact and coil ratings shall be as specified in table I.
   (e) Vibration - relays shall be tested for type I vibration in accordance with MIL-STD-167-1. The relay shall be energized and de-energized for 1 hour each in each of three mutually perpendicular planes.
   (f) Shock - relays shall withstand the shock test for grade A, type A equipment in accordance with MIL-S-901, without contact chatter in excess of 100 microseconds.
   (g) Salt spray - relays shall be tested in accordance with method 101, test condition B, of MIL-STD-202. After test, relay shall be washed, shaken, and air blasted and then allowed to dry for 24 hours. Relays shall then be examined for corrosion and exposure of base metal.
   (h) Moisture resistance - relays shall be exposed to a 100-hour humidity test as follows: Assemblies shall be placed in a chamber at a temperature of 50°C at a relative humidity of 90 to 100 percent (dew point reached at least once each 24 hours). A 225 ± 25 volt source of dc shall be provided. One coil terminal shall be connected to the positive source and the negative shall be attached to the frame. After the test, coil resistance shall still be as required.
   (i) The relay shall function satisfactorily in an ambient temperature varying from minus 30 to plus 160°F.

ASSEMBLY/REASSEMBLY INSPECTIONS:

1. A protective cover shall be provided over the relay contacts and the relay spring (see figure 11).
2. Relays shall be furnished with 2-inch wire leads, AWG number 20 or larger, stranded, thermoplastic, for connecting the relay coil to the supply cable and to switch off the relay assembly. Shrink-on insulation sleeves shall be placed over the 120 volt and over electrical connections to ensure that no metallic or conducting parts shall be exposed.

FIGURE 19. Relay - Continued.

Downloaded from http://www.everyspec.com

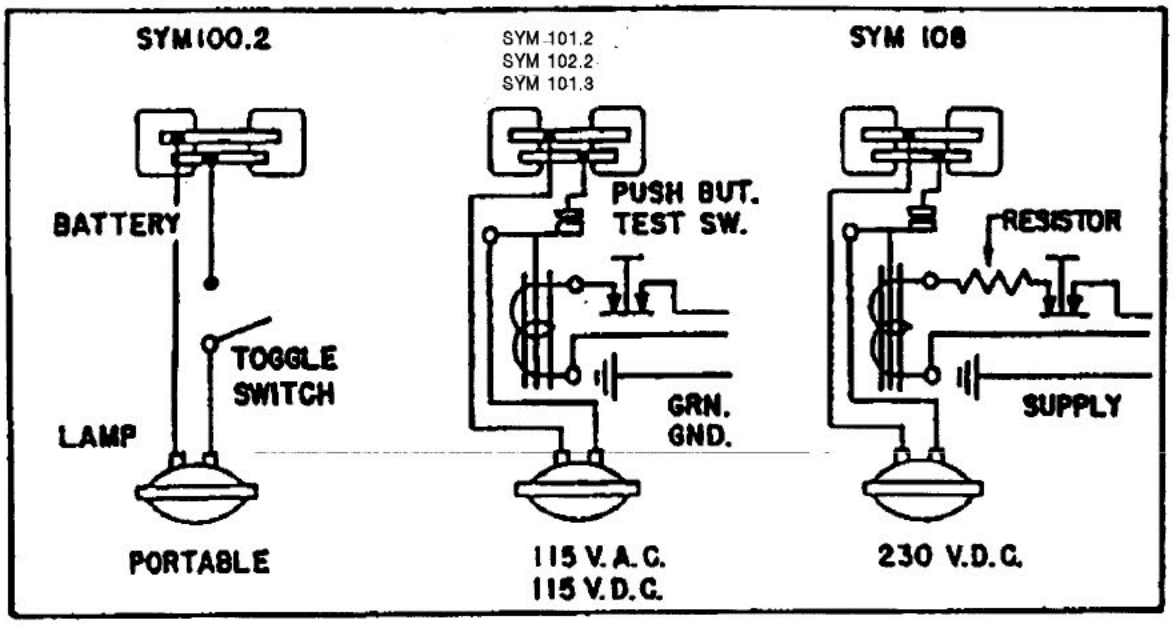

NOTES:

1. For Symbol 100.2, 101.2, 102.2, and 108 lanterns, two non-rechargeable batteries are used. For Symbol 101.3 lanterns, one charger/control unit and one rechargeable battery are used.

FIGURE 20. Wiring diagram.

Downloaded from http://www.everyspec.com

REQUIREMENTS:

Type:	II
Class:	1
Symbol 100.2:	Lantern, portable, with handle and mounting bracket.
Symbol 101.2:	Lantern, relay, 115 Vac.
Symbol 102.2:	Lantern, relay, 115 Vdc.
Symbol 108:	Lantern, relay, 230 Vdc.
Symbol 101.3:	Lantern, rechargeable, 115 Vac.
Design:	
Dimensions and configurations:	See figures 1 through 20.
Material:	
Box, cover, lamp retainer and relay housing:	Material for box, cover lamp retainer, and relay housing shall be molded plastic. The color of molded parts shall be yellow conforming to color number 13415 of FED-STD-595 attained without resort to painting, enameling, or other post-molding applications. Plastic material shall be type MAI-60 of MIL-M-14 or one of the following: Floerite number X5064, Glaskyd number 1902, Plaskon number 446, Raflon number 1030, or equal.
Screws:	All screws shall be brass.
Lockwashers:	All lockwashers shall be phosphor-bronze, internal-lock.
Inserts:	All inserts shall be brass.
Lantern assembly (complete) and typical mounting:	See figures 1 and 2.
Body assembly.	See figure 3. All parts shown on figure 3 shall be furnished assembled as indicated.
Bolts:	Gaskets or bolts with self-contained gaskets such as "steel-bolts" shall be furnished so as to seal the mounting holes against the entrance of water where the body is assembled and mounted in the condition shown on figure 2.
Mounting bolts:	Mounting bolts shall be as shown on figures 3 and 17.
O-ring:	O-ring gaskets shall be furnished to seal the mounting holes against the entrance of water when the body is assembled and mounted in the condition shown on figure 2.
Lamp:	Lamp shall be in accordance with A-A-50595.
Lamp contact assembly:	See figure 15. The plunger shall work freely in the sleeve without rubbing or coming adrift.
Battery contact connectors:	See figure 16. Material shall be brass, half hand. Battery contact connectors shall be silver plated.
Box, cover and lamp-retainer:	See figures 7, 8, and 9 respectively.
Wire assembly:	See figure 18.
Gasket, lamp:	See figure 12. Material shall be neoprene rubber, 45-55 durometer A.
Gasket, cover:	See figure 14. Material shall be neoprene rubber, 45-55 durometer A.

Downloaded from http://www.everyspec.com

Handle assembly:	See figure 4. All parts shown on figure 4 shall be furnished assembled as indicated.
Switch:	Switch shall be toggle, conforming to MS16656-2.
Boot:	Boot shall be in accordance with MIL-B-5423/2.
Gasket:	See figure 13. Material shall be neoprene rubber 45-55 durometer A.
Bracket assembly:	See figure 5. Material shall be steel; zinc or cadmium plated.
Relay assembly:	See figure 6. All parts shown on figure 6 shall be furnished assembled as indicated.
Cable:	Cable shall be 10 feet of type SJT or SJO, AWG No. 16, three conductor (white, black, green), in accordance with J-C-580.
Cap:	Cap shall be in accordance with MIL-S-19622/10-0002 of MIL-S-19622/10.
Packing assembly:	Packing assembly shall be in accordance with MIL-S-19622/17-0002 of MIL-S-19622/17.
Switch:	Switch shall be pushbutton, momentary, in accordance with M8805/20-12 of MIL-S-8805/20, except that it shall be one circuit furnished without the nut and lockwasher.
Boot:	Boot shall be style 2, size 3 of MIL-B-5423/7.
Relay housing:	See figure 11.
Gasket:	See figure 13. Material shall be neoprene rubber 45-55 durometer A.
Relay:	See figure 19.
Wire assembly:	See figure 18.
Ground connection:	The metal neck of the pushbutton switch and the relay metallic frame shall be electrically connected to the green lead of the supply cable for grounding to ships structure.
Wiring:	Interconnecting and power leads shall be soldered on switch and relay terminals. The connections shall be mechanically secure and electrically continuous after soldering.
Insulating sleeve:	Shrink-on insulating sleeves shall be installed over all electrical connections carrying 120 or higher voltage. No metallic parts of such connections shall be exposed. Insulating sleeves shall not be loose or allowed to move. Insulating sleeves are not required for ground connections or electrical connections of the battery circuit.
Rechargeable retrofit kit:	The rechargeable retrofit kit shall convert a Symbol 101.2 (non-rechargeable) lantern into a Symbol 101.3 (rechargeable) lantern. The recharging retrofit kit shall consist of a charger/control unit, a relay housing (see figure 11) with an indicating LED assembly, and the appropriate wiring and connectors. The rechargeable battery specified herein shall be acquired separate from the rechargeable retrofit kit. The configuration of the charger/control unit and the rechargeable battery shall be such that they cannot be placed in the incorrect position.

Downloaded from http://www.everyspec.com

Charger/control unit (for Symbol 101.3 only):

Power input:	115 Vac
High voltage cutoff:	6.9 V nominal
Low voltage cutoff:	5.25 V nominal
Maximum charging current:	500 mA
Recharging activation:	The charger/control unit shall automatically initiate charging once the battery has less than 90 percent of full charge and 115 Vac power is restored.
Lantern activation:	The charger/control unit shall automatically turn the lantern on when there is a loss of 115 Vac power and remain on until the battery reaches the low voltage cutoff.
Maximum recharge time:	16 hours
Electromagnetic interference:	In accordance with RE101, RE102, CE101, and CE102 requirements of MIL-STD-461. Tested in accordance with the applicable parts of MIL-STD-462.
Terminals:	Two coil springs, for contact with the existing battery contact connectors (see figure 16).
Dimensions:	The charger/control unit shall have identical dimensions of a type BA-200/U battery in accordance with ANSI C18.10002.

LED assembly (for Symbol 101.3): The LED assembly shall be mounted on the relay housing (see figure 11) such that it can be readily visible from the front of the lantern. The LED shall distinguish between a charging and fully charged battery mode. No illumination shall be indicative of the absence of 115 Vac or a defective LED only.

Wiring/connections (for Symbol 101.3): Appropriate wiring for the charger/control unit and the LED assembly shall be supplied as part of the rechargeable retrofit kit. The connections between the power input leads and charger/control unit and the connections between the LED assembly and the charger/control unit shall be made using suitable connectors.

Time of lamp illumination (for Symbol 101.3): Not less than 4 hours before the lantern reaches the low voltage cutoff of 5.25 V.

Batteries (for Symbols 100.2, 101.2, 102.2, and 108 lanterns): Lanterns shall accommodate two batteries in parallel, type BA-200/U in accordance with ANSI C18.10002. Batteries are not furnished.

Rechargeable battery (for Symbol 101.3): Symbol 101.3 lanterns shall accommodate one rechargeable battery as specified herein. Batteries are not furnished with the rechargeable retrofit kit.

Downloaded from http://www.everyspec.com

Type:	Sealed, lead-acid, maintenance free.
Nominal voltage:	6.0 V
Nominal capacity:	4.0 Ampere-hours at 20 hour rate, load of 200 mA 3.0 Ampere-hours at 6 hour rate, load of 500 mA
Terminals:	Two coil springs, for contact with the existing battery contact connectors (see figure 16).
End of discharge voltage:	5.25 V nominal
Self-discharge per month at 68°F:	Not greater than 3 percent.
Operating temperature range:	0°F to 122°F
Cycle life (at 500 mA, at 100% depth of discharge:	Not less than 800 cycles before battery is down to 80 percent of rated capacity.
Capacity loss per 100 cycles:	Not greater than 2.5 percent.
Dimensions:	The rechargeable battery shall have the identical dimensions of a BA-200/U type battery of ANSI C18.10002.

Enclosure:	Watertight-complete lanterns.
Operating temperature:	Not greater than 122°F.
Weight:	
Symbol 100.2:	5 lbs., 9 oz. maximum without batteries.
Symbols 101.2, 102.2, and 108:	6 lbs., 8 oz. maximum without batteries.
Symbol 101.3:	10 lbs, 8 oz. maximum with rechargeable battery, charger/control unit, and the LED assembly installed.
Labels:	Labels shall be furnished in accordance with MIL-F-16377. The following labels and information shall be furnished.

Type I - See MIL-F-16377.
Type III - Wiring diagram of figure 20.
Type IV - "USE FOLLOWING REPAIR PARTS

Lamp	A-A-50595
Boot for toggle switch	M5423/02
Boot for pushbutton switch	M5423/07-03
Toggle switch	MS16656-2
Pushbutton switch	M8805/20-12"

Quality assurance:	Quality assurance shall be as specified in MIL-F-16377 and as follows:
First article inspection:	
Body assembly:	See table II.
Handle assembly:	See table II.
Bracket assembly:	Examination only.
Relay assembly:	See table II.
Quality conformance:	
Comparison inspection:	Same as the first article inspection.
Inspection of product for delivery:	
Examination:	See MIL-F-16377
Examination for packaging:	See MIL-F-16377.
Quality conformance tests:	See MIL-F-16377.

Downloaded from http://www.everyspec.com

TABLE II. First article and comparison inspection for body and handle assembly.

Inspection	Remarks 1/
Examination	
Operation	
Enclosure effectiveness	Watertight
Shock	
Vibration	
Enclosure effectiveness	Watertight

1/ For test purposes, body or handle assembly shall be assembled and mounted as shown on figure 2 for Symbol 100.2. Batteries shall be installed for the operation, shock, and vibration tests.

TABLE III. First article and comparison inspection for relay lanterns.

Inspection	Remarks 1/
Examination	
Operation	
Dielectric withstanding voltage	
Insulation resistance	
Enclosure effectiveness	Watertight
Shock	
Vibration	
Enclosure effectiveness	Watertight
Dielectric withstanding voltage	
Insulation resistance	
Grounding circuit	

1/ Relay assemblies shall be assembled and mounted as shown on figure 2. Batteries shall be installed for the operation, shock, and vibration tests. For Symbol 101.3 lanterns, the charger/control unit and the LED assembly shall be connected and mounted as specified herein and the relay assembly shall be removed. For Symbol 101.3 lanterns, the rechargeable battery shall be installed for the operation, shock, and vibration tests.

Downloaded from http://www.everyspec.com

General information:

(a) Assignment of Military part numbers and general information is shown in table IV.

TABLE IV. Part number and general information.

Military part number M16377/53	Item name	Remarks
-100.2	Complete lantern, symbol 100.2	1/, 6/
-101.2	Complete lantern, symbol 101.2	2/, 6/
-102.2	Complete lantern, symbol 102.2	3/, 6/
-108	Complete lantern, symbol 108	4/, 6/
-101.3	Complete lantern, symbol 101.3	5/, 6/
001	Body assembly	
002	Handle assembly	
003	Bracket assembly	
004	Relay assembly, 115 Vac	
005	Relay assembly, 115 Vdc	
006	Relay assembly, 230 Vdc	
007	Cover gasket, figure 14	
008	Rechargeable retrofit kit	
009	Rechargeable battery	

1/ Symbol 100.2 consists of part numbers: M16377/53-001, M16377-53-002, and M16377/53-003.
2/ Symbol 101.2 consists of part numbers: M16377/53-001 and M16377/53-004.
3/ Symbol 102.2 consists of part numbers: M16377/53-001 and M16377/53-005.
4/ Symbol 108 consists of part numbers: M16377/53-001 and M16377/53-006.
5/ Symbol 101.3 consists of part numbers: M16377/53-001, M16377/53-008, and M16377/53-009.
6/ Lanterns are not furnished as complete units. Complete lanterns shall be assembled using the component parts indicated.

(a) Lanterns are intended to be mounted on board ship as shown on figure 2.
(b) Lanterns over surgical tables on board ship are intended to be mounted using the adjustable bracket shown on MIL-F-16377/55.
(c) Color filters, MIL-F-16377/43, shall be used to convert white (clear) light lanterns into colored light lanterns.

Revision letters are not used to denote changes due to the extensiveness of the changes.

Preparing activity:
Navy - SH
(Project 6230-N330)