Downloaded from http://www.everyspec.com

INCH-POUND

MIL-DTL-15370/16C
7 May 2008
SUPERSEDING
MIL-DTL-15370/16B
18 June 2003

DETAIL SPECIFICATION SHEET

COUPLERS, DIRECTIONAL, (COAXIAL, SMA CONNECTORS) (2 TO 1000 MHz)

This specification is approved for use by all Departments and Agencies of the Department of Defense.

The requirements for acquiring the couplers described herein shall consist of this specification sheet and MIL-DTL-15370.

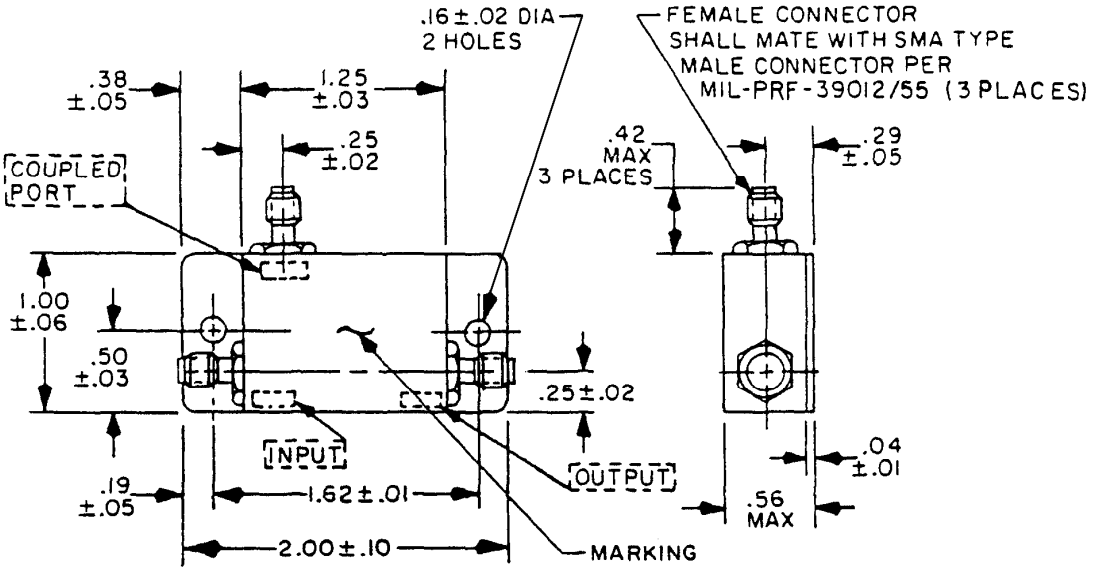

Inches	mm	Inches	mm	Inches	mm
.01	0.3	.10	2.5	.42	10.7
.02	0.5	.16	4.1	.50	12.7
.03	0.8	.19	4.8	.56	14.2
.04	1.0	.25	6.4	1.00	25.4
.05	1.3	.29	7.4	1.25	31.8
.06	1.5	.38	9.7	1.62	41.1
				2.00	50.8

NOTES:
1. Dimensions are in inches.
2. Metric equivalents are given for information only.

FIGURE 1. Dimensions and configuration for part numbers M15370/16-001 M15370/16-008 through M15370/16-015, M15370/16-017, M15370/16-018, and M15370/16-020 through M15370/16-022.

Downloaded from http://www.everyspec.com

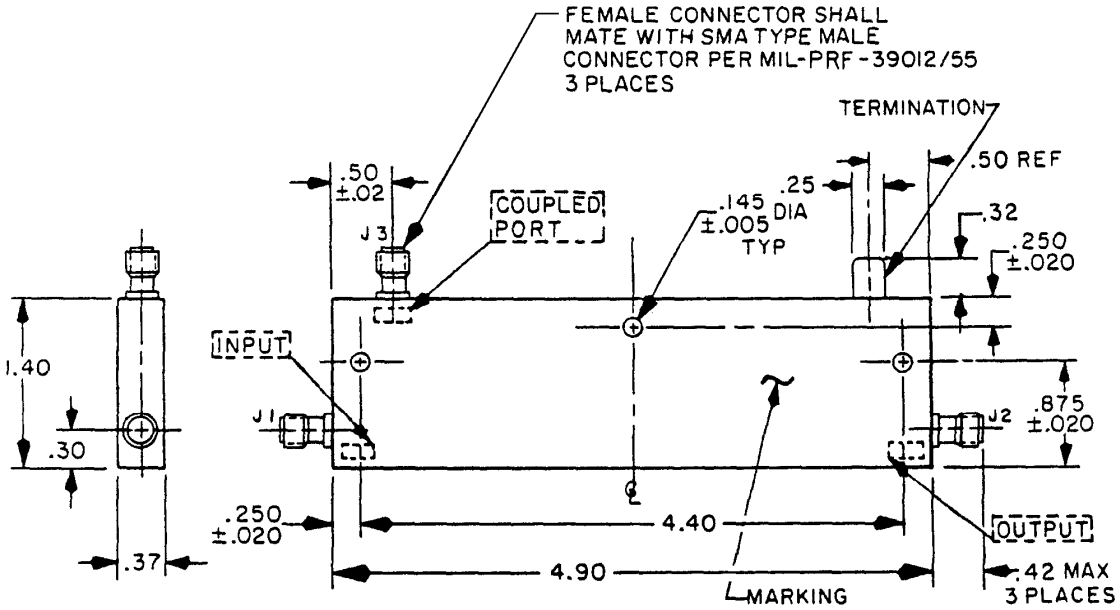

Inches	mm
.005	0.13
.020	0.51
.145	3.68
.250	6.35
.30	7.6
.32	8.13
.37	9.4
.42	10.7
.50	12.7
.875	22.22
1.40	35.6
4.40	111.8
4.90	124.5

NOTES:
1. Dimensions are in inches.
2. Metric equivalents are given for information only.
3. Unless otherwise specified, tolerance is ±.03 (0.8 mm).

FIGURE 2. Dimensions and configuration for part number M15370/16-002.

Downloaded from http://www.everyspec.com

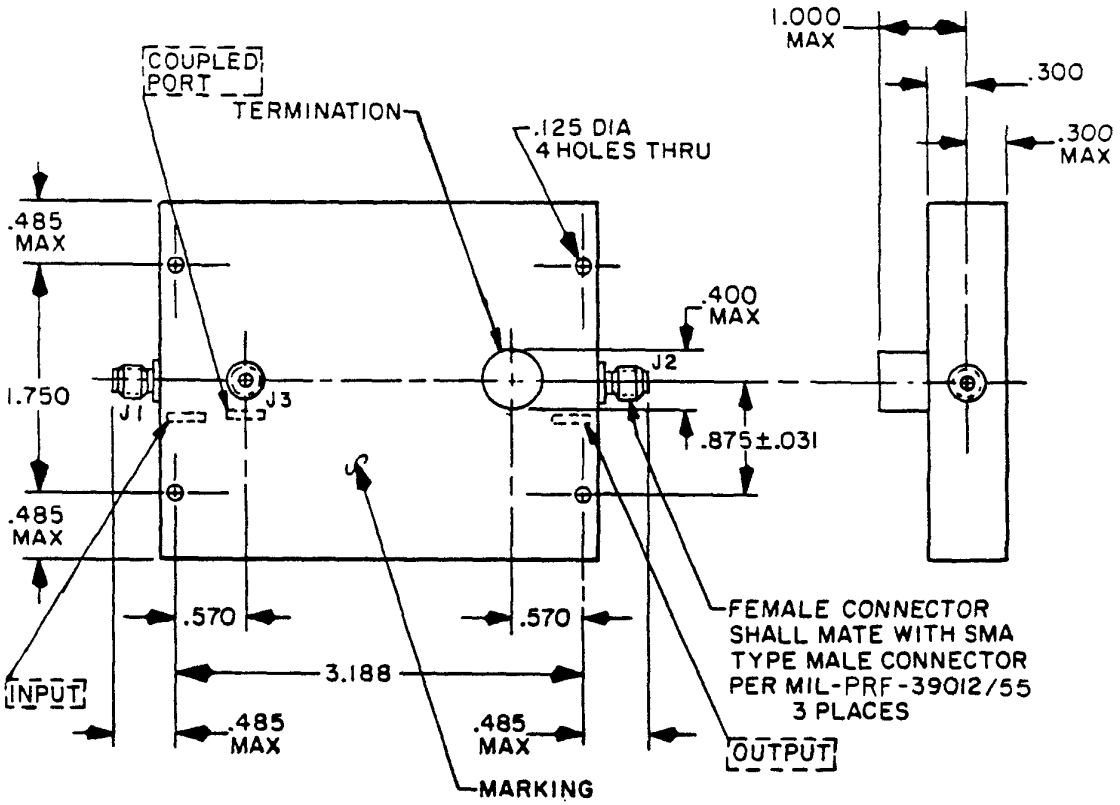

Inches	mm
.031	0.79
.125	3.18
.300	7.62
.400	10.16
.485	12.32
.570	14.48
.875	22.22
1.000	25.40
1.750	44.45
3.188	80.98

NOTES:
1. Dimensions are in inches.
2. Metric equivalents are given for information only.
3. Unless otherwise specified, tolerance is ±.16 (0.41 mm).

FIGURE 3. Dimensions and configuration for part number M15370/16-003.

Downloaded from http://www.everyspec.com

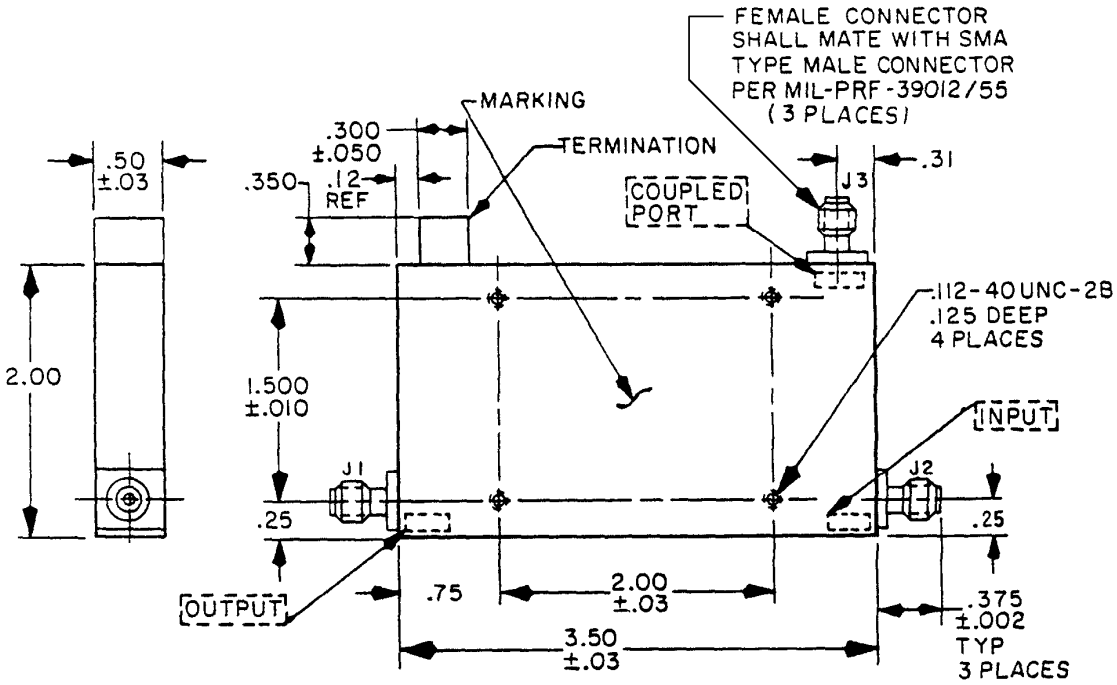

Inches	mm	Inches	mm
.002	0.05	.31	7.9
.010	0.25	.350	8.89
.03	0.8	.375	9.52
.05	1.3	.50	12.7
.112	2.84	.75	19.0
.12	3.05	1.500	38.10
.125	3.18	2.00	50.8
.25	6.5	3.50	88.9
.300	7.62		

NOTES:
1. Dimensions are in inches.
2. Metric equivalents are given for information only.
3. Unless otherwise specified, tolerance is ±.02 (0.5 mm).

FIGURE 4. Dimensions and configuration for part numbers M15370/16-004 through M15370/16-007.

Downloaded from http://www.everyspec.com

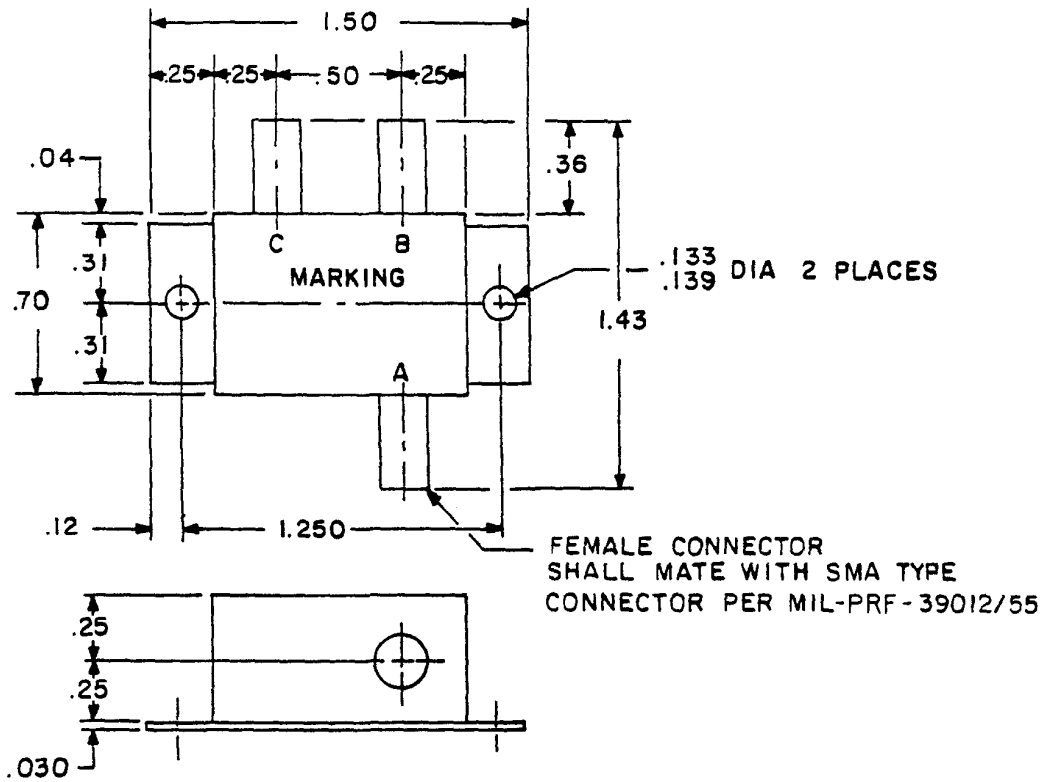

Inches	mm
.030	0.76
.04	1.02
.12	3.05
.133	3.38
.139	3.53
.25	6.35
.31	7.87
.36	9.14
.50	12.70
.70	17.78
1.250	31.75
1.43	36.32
1.50	38.10

NOTES:
1. Dimensions are in inches.
2. Metric equivalents are given for information only.
3. Unless otherwise specified, tolerance is ±.03 (0.8 mm).

FIGURE 5. Dimensions and configuration for part numbers M15370/16-016 M15370/16-019, and M15370/16-023.

Downloaded from http://www.everyspec.com

TABLE I. Electrical characteristics.

Dash number	Frequency range (MHz)	Coupling (dB)		Coupling variation (dB) max	Effective directivity (dB) min	Insertion loss (dB) max	VSWR max		RF input power to primary		
		Nominal	Tolerance				Primary line	Secondary line	Over frequency range (watts)	Avg (W)	Peak (KW)
001NS	25 - 35	25	±1.0	±1.0	25	0.25	1.20:1	1.20:1	5	5	---
002NS	125 - 250	30	±1.0	±0.75	15	0.30	1.15:1	1.15:1	50	50	---
003NS	125 - 250	10	±1.25	±0.75	25	0.20	1.10:1	1.10:1	50	50	3
004NS	250 - 500	6	±0.5	±0.5	25	0.10	1.10:1	1.25:1	100	100	6
005NS	250 - 500	10	±0.75	±0.75	25	0.10	1.10:1	1.25:1	100	100	6
006NS	250 - 500	20	±1.0	±1.0	25	0.10	1.10:1	1.25:1	100	100	5
007NS	250 - 500	30	±1.0	±1.0	25	0.10	1.10:1	1.25:1	100	100	6
008NS	285 - 315	25	±1.0	±1.0	25	0.25	1.20:1	1.20:1	5	5	---
009NS	20 - 60	15	±1.0	±0.5	30	0.5	1.30:1	1.30:1	5	5	---
010NS	68 - 82	30	±1.0	±0.5	30	0.5	1.30:1	1.30:1	5	5	---
011NS	102 - 138	30	±1.0	±1.0	25	0.25	1.20:1	1.20:1	5	5	---
012NS	2 - 100	10	±1.0	±0.5	30	0.5	1.30:1	1.30:1	5	5	---
013NS	2 - 100	15	±1.0	±0.5	30	0.5	1.30:1	1.30:1	5	5	---
014NS	2 - 100	20	±1.0	±0.5	30	0.5	1.30:1	1.30:1	5	5	---
015NS	270 - 330	20	+0.6 -0.0	±0.2	40	0.6	1.30:1	1.30:1	5	5	---
016NS	420 - 450	16	±0.3	±0.25	25	0.35	1.15:1	1.20:1	10	10	---
017NS	50 - 500	10	±1.0	±0.5	25	0.5	1.30:1	1.30:1	5	5	---
018NS	10 - 500	15	±1.0	±0.5	25	0.5	1.20:1	1.30:1	5	5	---
019NS	10 - 500	15	±0.25	±0.25	25	0.35	1.20:1	1.20:1	10	10	---
020NS	50 - 400	10	±1.0	±0.5	25	0.5	1.30:1	1.30:1	5	5	---
021NS	100 - 500	20	±1.0	±0.5	25	0.5	1.30:1	1.30:1	5	5	---
022NS	10 - 1000	20	±1.0	±0.5	25	0.6	1.30:1	1.30:1	5	5	---
023NS	75 - 1000	10	±0.5	±0.5	25	0.6	1.30:1	1.30:1	2	2	---

Downloaded from http://www.everyspec.com

TABLE II. Physical and environmental characteristics.

Dash number	Weight (average)	Temperature range (operating on top non-operating on bottom)	Shock (specified pulse) (method 213) 1/
	(oz)		
001	0.9	-54°C to +75°C -62°C to +75°C	H
002	4.5	-55°C to +85°C -55°C to +85°C	C
003	6.5	0°C to +50°C -62°C to +75°C	H
004	5.0	-55°C to +85°C -55°C to +85°C	N/A
005	5.0	-55°C to +85°C -55°C to +85°C	N/A
006	5.0	-55°C to +85°C -55°C to +85°C	N/A
007	5.0	-55°C to +85°C -55°C to +85°C	N/A
008	0.9	-54°C to +75°C -62°C to +75°C	H
009	1.5	-55°C to +105°C -55°C to +125°C	H
010	1.5	-55°C to +105°C -55°C to +105°C	H
011	1.5	-55°C to +105°C -55°C to +125°C	H
012	1.5	-55°C to +105°C -55°C to +125°C	H
013	1.5	-55°C to +105°C -55°C to +125°C	H
014	1.5	-55°C to +105°C -55°C to +125°C	H
015	1.5	-55°C to +105°C -55°C to +125°C	H
016	1.5	-54°C to +100°C -55°C to +125°C	H
017	1.5	-55°C to +105°C -55°C to +125°C	H
018	1.5	-55°C to +105°C -55°C to +125°C	H
019	1.5	-54°C to +100°C -55°C to +125°C	H
020	1.5	-55°C to +105°C -55°C to +125°C	H
021	1.5	-55°C to +105°C -55°C to +100°C	H
022	1.5	-55°C to +105°C -55°C to +125°C	H
023	1.5	-55°C to +100°C -55°C to +125°C	H

1/ Letters denote test conditions of MIL-STD-202.

Downloaded from http://www.everyspec.com

REQUIREMENTS:

Design, construction and physical dimensions: See figures 1 through 5.

Operating temperature range: See table II.

Weight: See table II.

Shock (specified pulse): See table II.

Electrical: See table I.

Marking: Part number (see tables I and II) shall be located as shown on figures 1 through 5.

Part number: M15370/16- (and a dash number from table I).

Referenced Documents: In addition to MIL-DTL-15370, this document references the following:
MIL-PRF-39012/55
MIL-STD-202

Marginal notations are not used in this revision to identify changes with respect to the previous issue due to the extent of the changes.

Custodians:
Army - CR
Navy - EC
Air Force - 11
DLA - CC

Preparing activity:
DLA - CC

Review activities:
Army - MI
Navy - AS, CG, MC, OS, SH
Air Force - 99

(Project 5985-2008-033)

NOTE: The activities listed above were interested in this document as of the date of this document. Since organizations and responsibilities can change, you should verify the currency of the information above using the ASSIST Online database at http://assist.daps.dla.mil/.