METRIC
MIL-DTL-14465E
12 August 1998
SUPERSEDING
MIL-PRF-14465D
22 February 1996

DETAIL SPECIFICATION

LIGHTS, COMPOSITE, 24 VOLTS DIRECT CURRENT (NOMINAL) VEHICULAR

This specification is approved for use by all Departments and Agencies of the Department of Defense.

1. SCOPE

1.1 Scope. This specification covers two types of vehicular composite light assemblies each consisting of a service driving light, infrared driving light, blackout driving light, and a blackout marker light. The vehicular composite light assemblies are referred to herein as "light assemblies". The light assemblies are designed for use on military tracked vehicles equipped with nominal 24-volt (V) direct current (dc) electrical systems (see 6.1).

1.2 Classification. The light assemblies are of the following types, as specified (see 6.2):

Type I - Quick detachable.
Type II - Bolt-down base.

2. APPLICABLE DOCUMENTS

2.1 General. The documents listed in this section are specified in sections 3 and 4 of this specification. This section does not include documents in other sections of this specification or recommended for additional information or as examples. While every effort has been made to ensure the completeness of this list, document users are cautioned that they must meet all

Beneficial comments (recommendations, additions, deletions) and any pertinent data which may be of use in improving this document should be addressed to: U.S. Army Tank-automotive and Armaments Command, ATTN: AMSTA-TR-E/BLUE, Warren, MI 48397-5000, by using the Standardization Document Improvement Proposal (DD Form 1426) appearing at the end of this document or by letter.

AMSC N/A FSC 6220

specified requirement documents cited in sections 3 and 4 of this specification, whether or not they are listed.

2.2 Government documents.

2.2.1 Specifications, standards, and handbooks. The following specifications, standards, and handbooks form a part of this document to the extent specified herein. Unless otherwise specified, the issues of these documents are those listed in the issue of the Department of Defense Index of Specifications and Standards (DoDISS) and supplement thereto, cited in the solicitation (see 6.2).

SPECIFICATIONS

FEDERAL

A-A-52463 - Lamp Bulbs, Incandescent, Miniature, Single and Double Contact, Bayonet Candelabra Base.

DEPARTMENT OF DEFENSE

MIL-L-3661 - Lampholders, Indicator Lights, Indicator-Light Housings, and Indicator-Light Lenses.
MIL-C-13486 - Cable, Special Purpose. Electrical: Low-Tension Heavy Duty Single-Conductor and Multiconductor, Shielded and Unshielded.
MIL-C-46168 - Coating, Aliphatic Polyurethane, Chemical Agent Resistant.

STANDARDS

DEPARTMENT OF DEFENSE

MIL-STD-130 - Identification Marking of U.S. Military Property.
MIL-STD-202 - Test Methods for Electronic and Electrical Component Parts (See 4.2.1).
MS18003 - Lamp Incandescent-Sealed Beam, Par 36, Headlamp, 3 Contact Lug Type.

(Unless otherwise indicated, copies of the above specifications, standards, and handbooks are available from the Standardization Document Order Desk, 700 Robbins Avenue, Building 4D, Philadelphia, PA 19111-5094.)

2.2.2 Other Government documents, drawings, and publications. The following other Government documents, drawings, and publications form a part of this specification to the extent specified herein. Unless otherwise specified, the issues are those cited in the solicitation.

DRAWINGS

ARMY

7962265	- Lens, Headlamp Filter.
7962266	- Lens, Service Headlamp.
7972325	- Headlamp Assembly and Parts List.
10891601	- Headlamp Assembly.
10941378	- Headlamp Assembly.
10947046	- Headlamp Assembly.
12360840	- Lamp.
12360860	- Lamp.

(Copies of these drawings are available from the U.S. Army Tank-automotive and Armaments Command, AMSTA-TR-E/BLUE, Warren, MI 48397-5000.)

2.3 Non-Government publications. The following document(s) form a part of this document to the extent specified herein. Unless otherwise specified, the issues of the documents which are DoD adopted are those listed in the issue of the DoDISS cited in the solicitation. Unless otherwise specified, the issues of documents not listed in the DoDISS are the issue of the documents cited in the solicitation (see 6.2).

AMERICAN SOCIETY FOR TESTING AND MATERIALS (ASTM)

ASTM B117	- Standard Test Method of Salt Spray (Fog) Testing (DoD Adopted).
ASTM G21	- Standard Practice for Determining Resistance of Synthetic Polymeric Materials to Fungi (DoD Adopted).

(Application for copies should be addressed to the American Society for Testing and Materials, 100 Barr Harbor Drive, West Conshohocken, PA 19428-2959.)

SOCIETY OF AUTOMOTIVE ENGINEERS, INC. (SAE)

SAE J575	- Test Methods and Equipment for Lighting Devices and Components. For Use On Vehicles Less Than 2032 MM In Overall Width (DoD Adopted).
SAE J578	- Color Specification (DoD Adopted).

(Application for copies should be addressed to the Society Of Automotive Engineers, Inc., 400 Commonwealth Drive, Warrendale, PA 15096.)

AMERICAN SOCIETY OF MECHANICAL ENGINEERS (ASME)

ASME B1.1 - Unified Inch Screw Threads (UN and UNR Thread Form) (DoD Adopted).

(Application for copies should be addressed to the American Society of Mechanical Engineers, 345 East 47th Street, New York, NY 10017-2392.)

2.4 Order of precedence. In the event of a conflict between the text of this document and the references cited herein, the text of this document takes precedence. Nothing in this document, however, supersedes applicable laws and regulations unless a specific exemption has been obtained.

3. REQUIREMENTS

3.1 First article. When specified (see 6.2), a sample shall be subjected to first article inspection in accordance with 4.1.1.

3.2 Materials. Materials shall be as specified herein and as in the referenced drawings, specifications, and standards and shall be free from all defects and imperfections that might affect the serviceability and function of the finished product (see 4.2.3). Asbestos and cadmium materials shall not be used in any form in any part of this vehicular lights. No item, part or assembly shall contain radioactive materials in which the specific activity is greater than 0.002 microcuries per gram or activity per item equals or exceeds 0.01 microcuries.

3.2.1 Recycled, recovered, or environmentally preferable materials. Recycled, recovered, or environmentally preferable materials should be used to the maximum extent possible provided that the material meets or exceeds the operational and maintenance requirements, and promotes economically advantageous life cycle costs.

3.3 Design and construction. Unless otherwise specified, the design and construction of the light assembly shall be as specified herein and in applicable referenced specifications, standards and drawings. Type I light assemblies shall conform to figure 1 or Drawings 10941378 or 10947046, as specified (see 6.2). Type II light assemblies shall conform to Drawing 10891601. All lamps of the light assemblies shall be of 24 Vdc nominal design. The light assemblies shall be designed to provide plus or minus (±) 5 degrees (°) lateral and ±5° vertical adjustment.

3.3.1 Threaded parts.

3.3.1.1 Screw threads. All screw threads shall conform to ASME B1.1.

3.3.1.2 Coated threaded parts. All threads, except for electrical conducting parts, electrical terminals, and self-locking nuts shall be coated with antiseize compound.

3.3.2 Locking devices. Lockwashers, locknuts, or other approved locking devices shall be provided for locking threaded parts in conformance with the applicable drawing or military standard to prevent loosening of components.

3.3.3 Internal connections. All internal connections subject to loosening by vibration shall be provided with locking devices. Conductors shall be secured in such a manner as to prevent unwanted contact with moving parts or their becoming chafed by contact with stationary parts.

3.3.4 Lamp bulbs and sockets. Lamp-bulb sockets shall conform to the applicable requirements of MIL-L-3661. Lamps, except the sealed-beam units shall be in accordance with the applicable requirements of A-A-52463.

3.3.5 Driving lights.

3.3.5.1 Sealed-beam lamps. The sealed-beam lamps shall conform to MS18003-411, two-filament type to provide high- and low-beam operation.

3.3.5.2 Clear lens. The clear lens of the driving light shall conform to Drawing 7962266.

3.3.5.3 Filter lens. The filter lens of the infrared driving light shall be infrared and shall conform to Drawing 7962265.

3.3.6 Blackout marker light. The front position markers shall emit white light and the filter lens shall be opaque except for the two Y-shaped openings.

3.3.7 Blackout driving light. The blackout driving light shall be constructed as shown on the applicable drawing or military standard.

3.3.8 Cable. Electrical cable shall conform to MIL-C-13486.

3.3.9 Standard parts. Military standard parts shall be used wherever applicable. Commercial standard parts may be used provided they are interchangeable without modification with the military standard parts they replace. Government approval is required when commercial parts are used.

3.4 Operating requirements. Each light assembly shall provide the following functional, operational, and performance capabilities.

3.4.1 Functioning. When supplied with an input voltage of 28 Vdc all lights of the light assembly shall operate without dimming or flickering.

3.4.2 Sealed-beam lamps - candlepower. When supplied with an input voltage of 28 Vdc, the sealed-beam lamps, both high and low beams, shall meet the candlepower requirements listed in tables I and II, 18 meters (m) from their source.

TABLE I. Lower beam candlepower values. 1/

Position (°)	Candlepower	
	Maximum	Minimum
1U to 90U	500	
H - L to R	750	
1D - V	1050	950
1 1/2 D - 3R to 3L	5000	
2D - 3R to 3L		2000
2D - 9R to 9L		1000
3D - 15R to 15L		500

1/ See 6.6.

TABLE II. Upper beam candlepower values. 1/

Position (°)	Candlepower
	Minimum
H - V	9000
H - 3L to 3R	7500
1D - 6L to 6R	5000
2D - 6L to 6R	5000

1/ See 6.6.

3.4.3 Blackout marker light. When supplied with an input of 28 Vdc, the blackout marker light shall meet the requirements in 3.4.3.1 through 3.4.3.4.

3.4.3.1 Visibility of beams. The two light beams emitted from each blackout marker light shall be individually visible up to 18 m. Beyond 18 m the light beams shall appear as a single point of light. The light beams shall be visible at a distance of 244 m and shall not be visible beyond 366 m.

3.4.3.2 Visibility from above.

3.4.3.2.1 20 percent (%) downgrade. When the composite light is on a 20% downgrade the vertical angles of cutoff above the horizontal shall be the maximum practicable provided the single light effect of the marker shall not be visible from above at more than 122 m above a horizontal line extending through the blackout marker light.

3.4.3.2.2 Vertical visibility When the composite light is level, the vertical angles of cutoff of the marker below the horizontal shall be such as not to cast a reflection below that which would be visible from the air at a height of more than 122 m.

3.4.3.3 Horizontal visibility. When the composite light is level, the horizontal angles of cutoff shall be the maximum practicable but shall be not less than 60° right or left of the beam centerline at 30.5 m.

3.4.3.4 Color of light. The color of the transmitted light shall be in accordance with the trichromatic coefficients given in table III.

TABLE III. Trichromatic coefficients.

Color designation	Trichromatic coefficients 1/		
	X	Y	Z
White dark	0.146	0.139	0.715

1/ The maximum deviation shall be 0.008.

3.4.4 Blackout driving light. When installed (see 6.7) and supplied with an input voltage of 28 Vdc, the blackout driving light shall give a white light and beam that has a luminous intensity of not less than 25 candela and not more than 50 candela when measured in the most intense portion of the beam, 3 m from its source. Its luminous intensity shall decrease uniformly from 6 to 30.5 m from the light with the top of the light beam directed not less than 1° below the horizontal. The beam distribution on a level road at a point 30.5 m from the vehicle blackout driving light shall be 9 m wide. Beam candlepower values at various positions shall be as specified in table IV.

3.5 Interface requirements. Each light assembly shall accommodate the following requirements:

3.5.1 Interchangeability. To provide for interchangeability, light assemblies fabricated in accordance with this specification shall have external dimensions that conform to the applicable drawing or military standard. Electrical connectors and mounting dimensions and location, shall also conform to the requirements of the applicable drawings or military standard.

TABLE IV. Candlepower values for blackout driving light. 1/

Position (°)	Candlepower	
	Minimum	Maximum
Line H 2/		1
1D	Visual Cutoff	
2D - 9L to 9R	25	50
3D - 12L to 12R	13	25
4D - 18L to 18R	6	15
6D - 24L to 24R	2	8
8D - 30L to 30R	1	4

1/ All beam candlepower readings shall be made at 3 m.
A tolerance of ± 1/2° shall be allowed for any position.
2/ Line H - Horizontal line at height of bottom of slot in shield.

3.6 Support and ownership requirements.

3.6.1 Identification marking. Unless otherwise specified (see 6.2), the light assembly shall be permanently marked in accordance with MIL-STD-130 or equivalent, and shall prominently display at least the manufacturer's name or trademark, manufacturer's part number, cage code, and military part or identification number (PIN) on the interior of the light assembly. Spare parts of the assembly which will be serviced and stocked for Army Field Service shall have a PIN permanently marked thereon. A tag shall be affixed to the light assembly for storage or handling identification.

3.6.2 Safety. The light assembly shall pose no hazards, physically or electrically to personnel.

3.6.3 Finish. Unless otherwise specified (see 6.2), cleaning, treating, priming, plating, and painting of parts of the light assembly shall be in accordance with the manufacturer's standard practice. All exposed parts requiring paint topcoat shall be topcoated with a forest- green paint conforming to MIL-C-46168.

3.7 Operating environment requirements. Each light assembly shall operate under the following environmental conditions, without degradation in performance.

3.7.1 Temperature cycling. The light assembly shall withstand exposure to temperatures as high as 85 degrees Celsius (°C) and as low as -55°C and to the thermoshock of alternate exposures to these extremes.

3.7.2 Waterproofness. The light assembly shall evidence no leakage, operational or mechanical damage during and after total submersion in a saline solution while supplied with 28 Vdc.

3.7.3 Vibration resistance. The light assembly shall be capable of withstanding the vibration profile experienced in the variety of military tactical vehicles in which it is used.

3.7.4 Shock resistance. The light assembly shall be capable of withstanding the sawtooth wave shock pulses having a peak value of 30 gravity units (g) and a duration of 11 milliseconds (ms).

3.7.5 Fungus resistance. The light assembly shall be resistant to conditions favorable to fungal growth; during 28-30 degrees Celsius (°C) and not less than 85% relative humidity.

3.7.6 Corrosion resistance. The light assembly shall be resistant to salt spray (fog) with 6.5-7.2 pH at 35°C.

4. VERIFICATION

4.1 Classification of inspection. The inspection conditions specified herein are classified as follows:

a. First article inspection.
b. Conformance inspection (CI).

4.1.1 First article inspection. When specified (see 6.2), first article inspection shall be performed on four initial production light assemblies as specified herein. Approval of the first production units by the Government shall not relieve the contractor of the obligation to supply assemblies that are fully representative of those inspected as a first article (see 6.4). First article inspection shall consist of the examinations and tests as specified in table V.

4.1.1.1 Order of inspection. The first article inspection sequence shall be in the order listed in table VI.

4.1.2 Conformance inspection. Unless otherwise specified (see 6.2), conformance inspection shall include the examinations and tests specified in table V (see 6.2 and 6.5).

4.1.3 Sampling. Sampling for examinations and tests shall be as specified in the contract or work order (see 6.2).

4.2 Verification methods. The types of verification methods included in this section are visual, inspection, measurement, sample tests, full-scale demonstration tests, simulation, modeling, engineering evaluation, component properties analysis, and similarity to previously-approved or previously-qualified designs.

TABLE V. Verification methods.

Title	Requirement	Verification	First article test	CI	
				Exam	Test
Materials, design and construction	3.2 through 3.3.9	4.2.3	X	X	
Operating requirements					
Functioning	3.4.1	4.2.4.1	X		X
Sealed-beam lamps	3.4.2	4.2.4.2	X		X
Blackout marker light	3.4.3	4.2.4.3	X		
Blackout driving light	3.4.4	4.2.4.4	X		
Interface requirements					X
Finish	3.5.1	4.2.5.1	X	X	
Interchangeability	3.5.2	4.2.5.2	X	X	
Support and ownership requirements					
Identification marking	3.6.1	4.2.6.1	X	X	
Safety	3.6.2	4.2.6.2	X	X	
Operating environment requirements					
Temperature cycling	3.7.1	4.2.7.1	X		
Waterproofness	3.7.2	4.2.7.2	X		X
Vibration resistance	3.7.3	4.2.7.3	X		
Shock resistance	3.7.4	4.2.7.4	X		
Fungus resistance	3.7.5	4.2.7.5	X		
Corrosion resistance	3.7.6	4.2.7.6	X		

4.2.1 Verification alternatives. The manufacturer may propose alternative test methods, techniques, or equipment, including the application of statistical process control, tool control, or cost-effective sampling procedures, to verify performance. See the contract for alternatives to replace verifications required by this specification.

4.2.2 Inspection conditions. Unless otherwise specified, all inspections shall be performed under the following ambient conditions (see 6.2).

a. Temperature: 25 ± 10°C.
b. Atmospheric pressure: Site pressure.
c. Relative humidity: Uncontrolled room ambient.

4.2.2.1 Laboratory driving light aiming. Proper aiming of the driving lights (without lens) for laboratory testing shall be as follows:

a. The greatest light intensity of the lower beam of the sealed-beam lamp shall fall 690 mm below the horizontal line on a screen placed 7.6 m from the lamp source.
b. Lateral adjustment shall be such that the center of the highest light intensity on the screen shall be straight ahead with a tolerance of ±76 millimeters (mm) on either side of the vertical plane.

TABLE VI. Order of first article testing.

Sample	Test	Requirement	Verification
1	Functioning	3.4.1	4.2.4.1
	Sealed-beam lamps	3.4.2	4.2.4.2
	Blackout driving light	3.4.4	4.2.4.4
	Blackout marker light	3.4.3	4.2.4.3
	Vibration resistance	3.7.3	4.2.7.3
	Functioning	3.4.1	4.2.4.1
	Waterproofness	3.7.2	4.2.7.2
	Shock resistance	3.7.4	4.2.7.4
	Functioning	3.4.1	4.2.4.1
	Waterproofness	3.7.2	4.2.7.2
2	Functioning	3.4.1	4.2.4.1
	Sealed-beam lamps	3.4.2	4.2.4.2
	Blackout driving light	3.4.4	4.2.4.4
	Blackout marker light	3.4.3	4.2.4.3
	Corrosion resistance	3.7.6	4.2.7.6
3	Functioning	3.4.1	4.2.4.1
	Sealed-beam lamps	3.4.2	4.2.4.2
	Blackout driving light	3.4.4	4.2.4.4
	Blackout marker light	3.4.3	4.2.4.3
	Waterproofness	3.7.2	4.2.7.2
	Functioning	3.4.1	4.2.4.1
4	Functioning	3.4.1	4.2.4.1
	Sealed-beam lamps	3.4.2	4.2.4.2
	Blackout driving light	3.4.4	4.2.4.4
	Blackout marker light	3.4.3.	4.2.4.3
	Fungus resistance	3.7.5	4.2.7.5
	Functioning	3.4.1	4.2.4.1
	Waterproofness	3.7.2	4.2.7.2

4.2.3 Materials, design and construction. Conformance to 3.2 through 3.3.9 shall be determined by inspection of contractor records providing proof or certification that design, construction, processing, and materials conform to requirements. Visual verification that the required components specified herein are not used shall constitute failure of this test (see 4.2).

4.2.4 Operating requirements verification.

4.2.4.1 Functioning. To determine conformance to 3.4.1, the composite light assembly shall be installed in a suitable holder, connected to a 28 Vdc power source, and then visually examined.

4.2.4.2 Sealed-beam lamps - candle power. To determine conformance to 3.4.2, the sealed-beam lamps shall be tested in accordance with the photometry test method specified in SAE J575. The photometry tests shall be made at the design voltage (28 Vdc) of the sealed-beam unit and with a photometer located at a distance 18 m from the lamp.

4.2.4.3 Blackout marker light. To determine conformance to 3.4.3, the blackout marker shall be connected to a 28 Vdc power source and tested by any practical method to determine visibility specified in 3.4.3. The trichromatic coefficients shall be determined at the design voltage (28 Vdc) of the blackout marker light in accordance with SAE J578.

4.2.4.4 Blackout driving light. To determine conformance to 3.4.4, the blackout driving light shall be connected to a 28 Vdc power source and tested in accordance with the photometry test method specified in SAE J575.

4.2.5 Interface requirements verification.

4.2.5.1 Interchangeability. Verify the interchangeability between different parts having the same military part number by a sample test of replacing one part for another of the same part number. External dimensions, electrical connectors, mounting dimensions and locations that do not conform to applicable drawings shall constitute failure of the test (see 4.2).

4.2.6 Support and ownership requirements verification.

4.2.6.1 Identification marking. Verify the presence of the minimum required identification markings of 3.6.1. Absence of any of the minimum markings constitutes failure of this test (see 4.2).

4.2.6.2 Safety. The light assembly shall be inspected for hazardous burrs, sharp edges, foreign materials, or other imperfections that pose physical danger to an installer/operator. Inspect the assembly for exposed, frayed, unsecured, or otherwise improperly protected circuits

that pose electrical danger to the installer/operator. Existence of any of these imperfections shall constitute failure of this test (see 4.2).

4.2.6.3 Finish. Visually and by sample test verify that the finish applied to the light assembly is top coated forest green paint conforming to MIL-C-46168. Non conformance of color or material shall constitutes failure of this test (see 4.2).

4.2.7 Operating environment requirements verification.

4.2.7.1 Temperature cycling. The light assembly shall be subjected to the temperature cycling test specified in test in test condition A, method 107 of MIL-STD-202 or equivalent (see 4.2.1). Failure of the light assembly to operate satisfactorily after subject testing, shall constitute failure of the test.

4.2.7.2 Waterproofness. The light assembly shall be submerged in a container, a minimum of 1 in. below the surface of the saline solution, made up of 5 parts by weight of salt in 95 parts by weight of distilled water and installed in the chamber. The component shall be carefully observed during its entire period of submersion and shall be operated while submerged for 30 minutes at full rated current and voltage. The chamber shall be evacuated to a pressure 6 lb (3 kg) below atmospheric so as to apply a minimum of 6 psi (41 kPa) in internal pressure to all voids within the light assembly. Any evidence of bubbles escaping from the interior of the light assembly shall constitute failure of this test. Bubbles which are the result of trapped air on the exterior surfaces of the light assembly shall not be cause for failure. The chamber shall then be pressurized to 6 lb above atmospheric and the light assembly again operated for 30 minutes. The light assembly shall then be subjected to and pass the tests specified in 4.2.4.1 and 4.2.7.6. Evidence of leakage into the inside of the light assembly shall constitute failure of the test.

4.2.7.3 Vibration resistance. The light assembly, with sealed lamps and miniature lamps removed, shall be mounted on a vibrating machine and subjected to a simple harmonic motion having a maximum amplitude of 0.76 mm (1.5 mm maximum total excursion) through a frequency range of 10 to 55 to 10 cycles per second. The frequency shall vary throughout the entire frequency range once each minute. The vibration shall be applied for 1 hour in each of the directions of the three major axes after which the sealed units and lamps shall be replaced. Subsequently, the light assembly shall be tested in accordance with 4.2.4.1 and 4.2.7.2. Failure of the light assembly to operate satisfactorily after subject testing, shall constitute failure of the test.

4.2.7.4 Shock resistance. The light assembly shall be subjected to the shock resistance test specified in method 213, test condition K, of MIL-STD-202 or equivalent (see 4.2.1). The impact shall be produced three times in each of the directions of the three major axes of the light assembly. Subsequently, the light assembly shall be tested in accordance with 4.2.4.1 and 4.2.7.2.

Failure of the light assembly to operate satisfactorily after subject testing, shall constitute failure of the test.

4.2.7.5 Fungus resistance. The light assembly shall be subjected to a fungus resistance test as specified in ASTM G21. Subsequently, the light assembly shall be tested in accordance with 4.2.4.1 and 4.2.7.2. Failure of the light assembly to operate satisfactorily after subject testing, shall constitute failure of the test.

4.2.7.6 Corrosion resistance. The light assembly shall be subjected to the salt spray (fog) test as specified in ASTM B117, for a period of 200 hours. Subsequently, the light assembly shall be tested in accordance with 4.2.4.1. Failure of the light assembly to operate satisfactorily after subject testing, shall constitute failure of the test.

5. PACKAGING

5.1 Packaging. For acquisition purposes, the packaging requirements shall be as specified in the contract or order (see 6.2). When actual packaging of material is to be performed by DoD personnel, these personnel need to contact the responsible packaging activity to ascertain requisite packaging requirements. Packaging requirements are maintained by the Inventory Control Point's packaging activity within the Military Department of Defense Agency, or within the Military Department's System Command. Packaging data retrieval is available from the managing Military Department's or Defense Agency's automated packaging files, CD-ROM products, or by contacting the responsible packaging activity.

6. NOTES

(This section contains information of a general or explanatory nature that may be helpful, but is not mandatory.)

6.1 Intended use. Light assemblies covered by this specification are intended for use on military tracked vehicles to provide general illumination ahead of the vehicle for the safe operation of the vehicle during darkness and other conditions of reduced visibility. The two types covered by this specification are similar except for their base assemblies. The light assemblies are designed for use with sealed-beam units and lamp bulbs having a design voltage of 28 Vdc. The lights assembly covered by this specification are military unique because they must be able to operate satisfactorily at ambient temperatures ranging from minus 55 °C to plus 71°C. Commercial components are not designed to withstand such extreme environmental conditions and would experience failure.

6.2 Acquisition requirements. Acquisition documents must specify the following:

a. Title, number, and date of this specification.
b. PIN or part number of light assembly required (see 1.2 and 3.6).
c. Issue of DoDISS to be cited in the solicitation, and if required, the specific issue of individual documents referenced (see 2.2.1 and 2.3).
d. If first article is required (see 3.1 and 4.1.1).
e. If type I light assembly is required to conform to figure 1 or to applicable drawings (see 3.3).
f. Finish, if other than as specified (see 3.5).
g. If identification marking is other than as specified (see 3.6.1).
h. If conformance inspection is other than as specified (see 4.1.2).
i. Sampling requirements (see 4.1.3).
j. If inspection conditions are other than as specified (see 4.2.2).
k. Packaging requirements (see 5.1).
l. If type I light base threads are other than as specified (see figure 1).

6.3 Part or identifying number (PIN). The PINs to be used for lights acquired to this specification are created as follows:

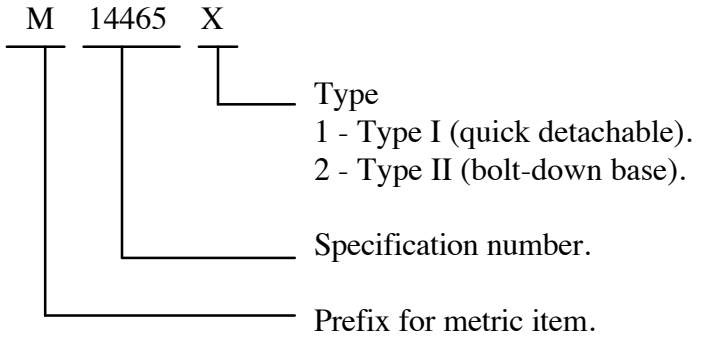

6.4 First article. When requiring a first article inspection, contracting documents should provide specific guidance to offerors. This guidance should cover whether the first article is a first article sample, a first production item, or the number of test items. These documents should also include specific instructions regarding arrangements for examinations, approval of first article test results, and disposition of first articles. Pre-solicitation documents should provide Government waiver rights for samples for first article inspection to bidders offering a previously acquired or tested product. Bidders offering such products who wish to rely on such production testing must furnish evidence with the bid that prior Government approval is appropriate for the pending contract.

6.5 Conformance inspection. Affordable conformance inspection with confidence varies depending upon a number of procurement risk factors. Some of these factors include: Contractor past performance, government schedules and budget, product material and design maturity, manufacturing capital equipment and processes applied, the controlled uniformity of those processes applied, labor skill and training, and the uniformity of measuring processes and techniques. During the solicitation, contracting documents should indicate those tests desired from Table V and their designated frequency based on a risk assessment for the procurement.

6.6 Aiming tolerance. When marking photometric tests of the sealed unit itself, an aiming tolerance of ±0.25° and an additional tolerance of ±20 % of candlepower at the test point should be allowed for manufacturing variations.

a. One degree is equal to 533 mm at 30.5 m.
b. For photometric test point location information refer to SAE J575.

6.7 Blackout driving light. Due to tolerance allowed manufacturers of lamp bulbs, it is suggested that lamp bulbs be installed so that the lamp bulb filaments bisect the vertical centerline of the blackout drive light lens.

6.8 Subject term (key word) listing.

Blackout
Driving
Filter
Infrared
Lens
Sealed beam

6.9 Changes from previous issue. Marginal notations are not used in this revision to identify changes with respect to the previous issue due to the extent of the changes.

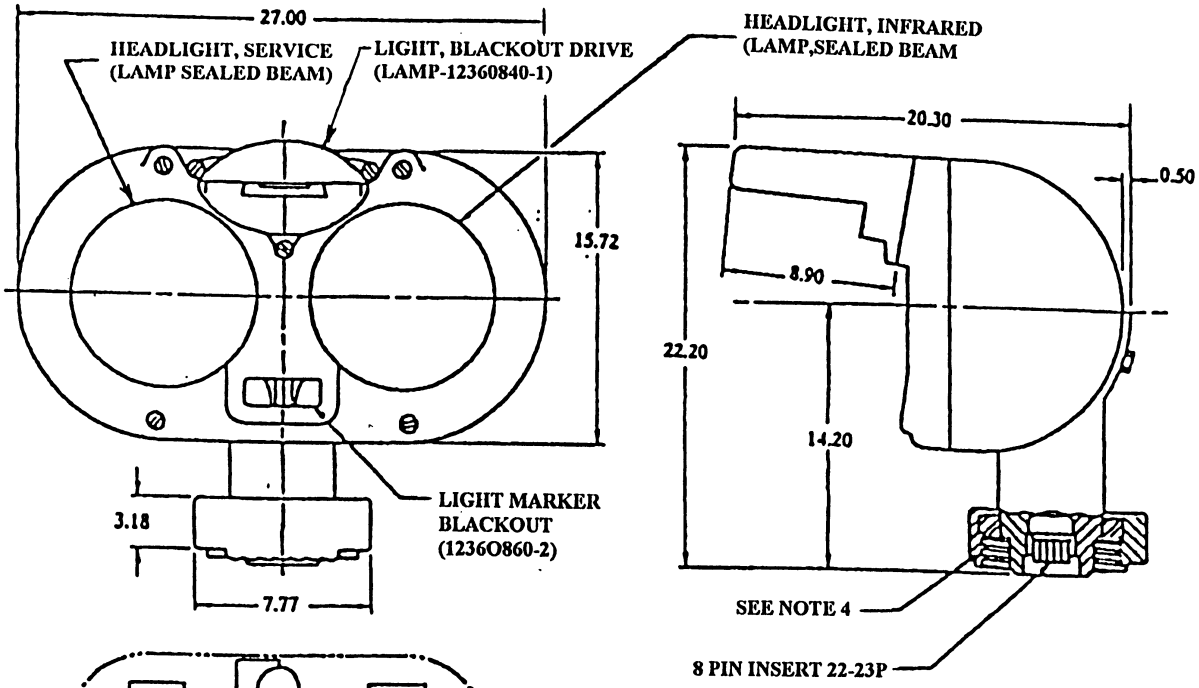

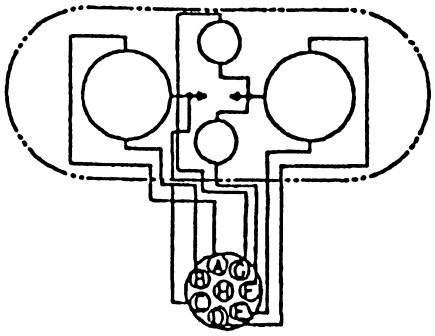

SCHEMATIC DIAGRAM

Pin	Circuit Description	Circuit Number
A	Headlight Service (Low Beam)	18
B	Headlight, Service (High Beam)	17
C	Ground	91
D	Headlight, Infrared Low Beam	515
E	Headlight, Infrared High Beam	514
F	Light, Marker, Blackout	20
G	Light, Driving, Blackout	19
H	Dummy	-

NOTES:

1. Dimensions are in centimeters.
2. For parts see engineering parts list 7972325.
3. For details see Drawing 7972325.
4. Unless otherwise specified (see 6.2), threads shall be 2.75-4 ACME-2G (inch-pound)

FIGURE 1. Type 1: Quick detachable vehicular composite light.

Custodians:
Army - AT
Navy - MC

Review Activity:
DLA - GS

Preparing Activity:
Army - AT

(Project 6220-1127)

STANDARDIZATION DOCUMENT IMPROVEMENT PROPOSAL

INSTRUCTIONS

1. The preparing activity must complete blocks 1, 2, 3, and 8. In block 1, both the document number and revision letter should be given.
2. The submitter of this form must complete blocks 4, 5, and 7.
3. The preparing activity must provide a reply within 30 days from receipt of the form.

NOTE: This form may not be used to request copies of documents, nor to request waivers, or clarification of requirements on current contracts. Comments submitted on this form do not constitute or imply authorization to waive any portion of the referenced document(s) or to amend contractual requirements.

I RECOMMEND A CHANGE:	1. DOCUMENT NUMBER MIL-DTL-14465E(AT)	2. DOCUMENT DATE *(YYMMDD)* 980812

3. DOCUMENT TITLE
Lights, Composite, 24 Volts Direct Current, Vehicular

4. NATURE OF CHANGE ***(Identify paragraph number and include proposed rewrite, if possible. Attach extra sheets as needed.)***

5. REASON FOR RECOMMENDATION

6. SUBMITTER

a. NAME *(Last, First, Middle Initial)*	b. ORGANIZATION	
c. ADDRESS *(Include Zip Code)*	d. TELEPHONE *(Include Area Code)* (1) Commercial (2) AUTOVON *(If applicable)*	7. DATE SUBMITTED *(YYMMDD)*

8. PREPARING ACTIVITY

a. NAME	b. TELEPHONE *(Include Area Code)* (1) Commercial (810) 574-8745	(2) AUTOVON 786-8745
c. ADDRESS *(Include Zip Code)* Commander U.S. Army Tank-automotive and Armaments Command ATTN: AMSTA-TR-E/BLUE Warren, MI 48397-5000	IF YOU DO NOT RECEIVE A REPLY WITHIN 45 DAYS, CONTACT: Defense Quality and Standardization Office 5203 Leesburg Pike, Suite 1403 Falls Church, VA 22041-3466 Telephone (703) 756-2340 AUTOVON 289-2340	