Downloaded from http://www.everyspec.com

INCH-POUND

MIL-DTL-12883F
18 February 2003
SUPERSEDING
MIL-PRF-12883E
25 May 1995

DETAIL SPECIFICATION

SOCKETS AND ACCESSORIES FOR PLUG-IN ELECTRONIC COMPONENTS, GENERAL SPECIFICATION FOR

This specification is approved for use by all Departments and Agencies of the Department of Defense.

1. SCOPE

1.1 Scope. This specification covers the general requirements for sockets and socket accessories for plug-in electronic components, such as electron tubes and related electronic devices, plug-in capacitors, crystal units, batteries, vibrators, relays, transistors, coils, etc. (see 6.2). Statistical Process Control (SPC) techniques are required in the manufacturing process to minimize variation in the production of sockets and accessories supplied to the requirements of the specification. See 6.2 for restrictions on intended use and application.

1.2 Classification.

1.2.2 Part or Identifying Number (PIN). The PIN consists of the letter "M", the basic number of the specification sheet, and an assigned dash number as shown in the following example:

M	12883/1	-01
Military designator	Specification sheet number	Dash number

2. APPLICABLE DOCUMENTS

2.1 General. The documents listed in this section are specified in sections 3 and 4 of this specification. This section does not include documents cited in other sections of this specification or recommended for additional information or as examples. While every effort has been made to ensure the completeness of this list, document users are cautioned that they must meet all specified requirements documents cited in sections 3 and 4 of this specification, whether or not they are listed.

Beneficial comments (recommendations, additions, deletions) and any pertinent data which may be of use in improving this document should be addressed to: Commander, Defense Supply Center Columbus, Attn: VAI, 3990 East Broad Street, Columbus, Ohio, 43216-5000 by using the Standardization Document Improvement Proposal (DD Form 1426) appearing at the end of this document or by letter.

DISTRIBUTION STATEMENT A. Approved for public release; distribution is unlimited.

Downloaded from http://www.everyspec.com

2.2 Government documents.

2.2.1 Specifications, standards, and handbooks. The following specifications, standards, and handbooks form a part of this document to the extent specified herein. Unless otherwise specified, the issues of these documents are those listed in the issue of the Department of Defense Index of Specifications and standards (DODISS) and supplement thereto, cited in the solicitation.

SPECIFICATIONS

DEPARTMENT OF DEFENSE

MIL-C-39029	-	Contacts, Electrical Connector, General Specification for.
MIL-M-24519	-	Molding Plastics, Electrical, Thermoplastic.
MIL-S-24251	-	Shields, Retainers (Bases), and Adapters, Electron Tube, Heat Dissipating General Specification for

(See supplement 1 for list of associated specification sheets and military standards).

STANDARDS

FEDERAL

FED-STD-H28	-	Screw-Thread Standards For Federal Services.

DEPARTMENT OF DEFENSE

MIL-STD-202	-	Electronic and Electrical Component Parts.
MIL-STD-790	-	Standard Practice for Established Reliability and High Reliability Qualified Products List (QPL) Systems for Electrical, Electronic, and Fiber Optic Parts Specifications.
MIL-STD-810	-	Environmental Engineering Considerations and Laboratory Tests.
MIL-STD-1285	-	Marking of Electrical and Electronic Parts.
MIL-STD-1344	-	Test Methods for Electrical Connectors.

(Unless otherwise indicated, copies of federal and military specifications, standards, and handbooks are available from the Standardization Documents Order Desk, Building 4D, 700 Robbins Avenue, Philadelphia, PA 19111-5094.)

2.2 Non-Government publications. The following documents form a part of this document to the extent specified herein. Unless otherwise specified, the issues of the documents which are DoD adopted are those listed the issue of the DODISS cited in the solicitation. Unless otherwise specified, the issues of documents not listed in the DODISS are the issues of the document cited in the solicitation (see 6.2).

ELECTRONIC INDUSTRIES ASSOCIATION (EIA)

EIA-557	-	Statistical Process Control (SPC) Systems.

(Application for copies should be addressed to the Electronic Industry Alliance, Corporate Engineering Department, 2500 Wilson Boulevard, Arlington, VA 22201.)

Downloaded from http://www.everyspec.com

AMERICAN NATIONAL STANDARDS INSTITUTE, INC.

ANSI Z540.1	-	Laboratories, Calibration and Measuring and Test Equipment.

(Application for copies should be addressed to the American National Standards Institute, 25 West 43rd Street, 4th FL., New York, NY 10036.)

AMERICAN SOCIETY FOR TESTING AND MATERIALS (ASTM)

ASTM B36/36M	-	Plate, Brass Sheet, Strip, and Rolled Bar.
ASTM B194	-	Copper Beryllium Alloy, Plate, Sheet, Strip, and Rolled Bar.
ASTM B488	-	Gold for Engineering Uses, Electrodeposited Coatings of.
ASTM D116	-	Ceramic Materials Vitrified for Electrical Applications.
ASTM D150	-	Loss Characteristics (AC) and Permittrvity (Dielectric Constant) of Solid Electrical Insulation.
ASTM D709	-	Materials, Laminated Thermosetting.
ASTM D5948	-	Compounds, Molding, Thermosetting.
ASTM D4067	-	Materials, Molding and Extrusion, Reinforced and Filled Polyphenylene Sulfide (PPS) Injection.
ASTM D5205	-	System for Polyetherimide (PEI) Materials.

(Application for copies should be addressed to the American Society for Testing and Materials, 100 Barr Harbor Drive, West Conshohocken, PA 19428-2959.)

SOCIETY OF AUTOMOTIVE ENGINEERS (SAE)

SAE-AMS-P-81728	-	Plating, Tin-Lead (Electrodeposited).

(Application for copies should be addressed to the Society of Automotive Engineers, 400 Commonwealth Drive, Warrendale, PA 15096-0001.)

(Non-Government standards and other publications are normally available from the organizations that prepare or distribute the documents. These documents also may be available in or through libraries or other informational services.)

2.3 Order of precedence. In the event of a conflict between the text of this document and the references cited herein (except for related associated specifications, specification sheets or MS standards), the text of this document takes precedence. Nothing in this document, however, supersedes applicable laws and regulations unless a specific exemption has been obtained.

Downloaded from http://www.everyspec.com

3. REQUIREMENTS

3.1 Specification sheets. The individual item requirements shall be as specified herein and in accordance with the applicable specification sheet. In the event of any conflict between the requirements of this specification and the specification sheet, the latter shall govern.

3.1.1 Alternate materials, platings, and processes. The identified reference materials, platings, and processes have been established to provide assurances that sockets manufactured to this specification will properly interface to similar industry standard or government specified component interconnection systems without problems of electrochemical contamination of critical electrical or mechanical interfaces or generation of incompatible mechanical interface surface wear products. The manufacturers of sockets supplied to this specification are allowed to use alternate recognized industry standards for materials, platings, and processes. Alternate materials, platings, and processes used shall be coordinated with the qualifying activity as part of the qualification process. Use of alternates to those referenced guidance items by the supplier shall not result in inferior short or long-term performance or reliability of supplied sockets as compared with sockets manufacture using the referenced materials, platings, or processes. Short or long term failures or reliability problems due to use of these alternates shall be the responsibility of the supplier.

3.2 Qualification. Sockets and accessories furnished under this specification shall be products which are authorized by the qualifying activity for listing on the applicable qualified products list at the time of award of contract (see 4.5 and 6.3).

3.2.1 Quality.

3.2.1.1 Statistical Process Control (SPC). The contractor shall implement and use statistical process control techniques in the manufacturing process for parts covered by this specification. The SPC program shall be developed and maintained in accordance with EIA-557. The SPC program shall be documented and maintained as part of the overall reliability assurance program as specified in MIL-STD-790. Evidence of such compliance shall be verified by the qualifying activity of this specification as a prerequisite for qualifications effective 12 months after the date of this document.

3.3 Materials. Example reference materials are identified herein. However, when an example reference material is not identified, a material shall be used which will enable the sockets and accessories to meet the performance requirements of this specification. Acceptance or approval of a constituent material shall not be construed as a guaranty of acceptance of the finished product.

3.3.1 Fungus resistance. Materials used in the construction of these sockets shall be fungus inert in accordance with MIL-STD-810, method 508.5, amount of growth none, rating 0.

Downloaded from http://www.everyspec.com

3.3.2 Ceramic.

a. Dielectric constant shall not exceed .016 maximum at 1 MHz. Loss index shall be determined at 1 MHz as specified in ASTM D150 the following conditions apply:

(1) Specimens shall be ¼ inch thick disks at least 3 inches in diameter, or ¼ inch thick plates, at lest 3 inches square.
(2) The specimens shall be immersed before application of the electrodes, in distilled water at a temperature of 23° ±2°C for 48 hours +1. -0 hours.
(3) The specimens shall be removed from the distilled water one at a time, rinsed in fresh distilled water, and all surface moisture on the specimens shall be removed by drying with a clean dry, absorptive cloth or paper.
(4) The electrodes shall be metal foil, applied with petrolatum.
(5) The elapsed time between removal of the specimens from the water and completion of the measurements shall not exceed 6 minutes.

b. Dielectric strength: The average dielectric strength shall be 200 to 239 volts/mil when tested as specified in ASTM D116, the following conditions apply:

(1) Specimens shall be ¼ inch thick disks at least 3 inches in diameter, or ¼ inch thick plates, at least 3 inches square. The specimens shall be immersed before application of the electrodes, in distilled water at a temperature of 23° ±2°C for 48 hours +1. -0 hours.
(2) The specimens shall be removed from the distilled water one at a time, rinsed in fresh distilled water, and all surface moisture on the specimens shall be removed by drying with a clean dry, absorptive cloth or paper.
(3) The electrodes shall be metal foil, applied with petrolatum.
(4) The elapsed time between removal of the specimens from the water and completion of the measurements shall not exceed 6 minutes.

c. Flexural strength (modulus of rupture): Average flexural strength shall be 12,000-to 19,900 pounds/sq. inch, as specified in ASTM D116, the following conditions apply:

(1) Specimens shall be rods ½ inch in diameter or ½ inch square, by 6 inches. The top and side surfaces of ceramic bodies above the mounting surfaces shall be glazed.
(2) All unglazed surfaces shall be treated with a Dow Corning DC-200, General Electric SF-99, or Union Carbide L-45 silicone compound, or other silicone compound satisfactory to the responsible qualifying activity.
(3) The silicone compounds shall be cured in accordance with the manufacturer's recommendations.

3.3.3 Plastic. Unless otherwise specified (see 3.1), plastic material utilized shall be in accordance with SDG-F as specified in ASTM D5948, or plastic with a minimum of 20 percent glass filled thermoplastic in accordance with MIL-M-24519 or type PPS000G40A43443E11 in accordance with ASTM D4067 or type PEI0310M20A33449208C in accordance with ASTM D5205, color shall be optional providing that the material color used is contrasting to polarizing color.

3.3.3.1 Plastic washers. Laminated thermosetting plastic material for washers used for mounting on ceramic body-mount sockets shall be in accordance with ASTM D709 (see 6.2).

3.3.4 Conducting material and finish.

Downloaded from http://www.everyspec.com

3.3.4.1 Contacts and contact tabs. Unless otherwise specified, contacts and contact tabs shall be made from beryllium copper in accordance with ASTM B194.

3.3.4.1.1 Finish. Contacts and contact tabs shall be gold plated in accordance with ASTM-B488, type II, code C, class 1.27 (50 microinches) minimum over a suitable underplate except silver underplate shall not be used (see 6.2).

3.3.5 Accessories (metal saddles, strap nuts, and center shields). Unless otherwise specified (see 3.1), metal saddles, strap nuts, and center shields shall be brass, or be fabricated from a material with equal or better properties to ASTM B36/36M, and shall be tin-lead plated (electrodeposited) in accordance with SAE-AMS-P-81728. The ground lug(s) and the terminal end of the center shield shall be hot solder dipped or coated. All surface treatments shall be electrically conductive (see 6.2).

3.3.6 Restricted material.

3.3.6.1 Waxes and varnishes. Unless otherwise specified, waxes or varnishes shall not be used.

3.3.6.2 Pure tin. The use of pure tin is prohibited see 6.2.2. The maximum amount of pure tin is 97 percent and the alloy material shall inhibit the growth of tin whiskers.

3.3.7 Recycled, recovered, or environmentally preferable materials. Recycled, recovered or environmentally preferable materials should be used to the maximum extent possible provided that the material meets or exceeds the operational and maintenance requirements, and promotes economically advantageous life cycle costs.

3.4 Interface and physical dimensions. Sockets and accessories shall be of the physical dimensions specified (see 3.1).

3.4.1 Sockets. Sockets shall be capable of properly mating with the applicable plug-in base (see 3.1).

3.4.2 Threaded parts. All threaded parts shall be in accordance with FED-STD-H28 and shall have the specified fit after plating or other coating (see 3.1). All threaded parts shall engage by at least two full threads.

3.4.3 Contact cavities. The arrangement of contact cavities in the insulator bodies of sockets shall be as specified (see 3.1). Each contact cavity shall be fitted with a contact assembly so confined within the cavity that accidental removal from the cavity is prevented, and positive alignment of the respective contacts, including the contact tabs, around the pin circle is effected.

3.4.3.1 Contact clearance. The tops of the contacts in their uppermost position shall be below the upper edge of the contact-cavity wall.

3.4.3.2 Contacts. When applicable (see 3.1), the requirements of MIL-C-39029 for crimp type removable socket contacts shall apply.

3.4.4 Wire-connector holes on terminals. The center of each wire-connector hole of a flat ground lug or contact tab shall lie on the approximate longitudinal centerline of the particular lug or tab. The longitudinal position of, or relative spacing between, wire-connector holes on lugs or tabs is optional.

3.5 Performance. Sockets and accessories shall be designed to meet the performance requirements specified herein.

Downloaded from http://www.everyspec.com

3.5.1 Insertion and withdrawal force. When sockets are tested in accordance with 4.7.2, the insertion and withdrawal force shall be as specified (see 3.1).

3.5.2 Insulation resistance. When sockets are tested in accordance with 4.7.3, the insulation resistance shall be as specified (see 3.1).

3.5.3 Dielectric withstanding voltage (sea level and high altitude). When sockets are tested in accordance with 4.7.4, there shall be no breakdown of insulation or flashover (see 3.1).

3.5.4 Gauge retention. When sockets are tested in accordance with 4.7.5, each contact shall retain the fully inserted test end of the test gauge without allowing the gauge to slide in the contact (see 3.1).

3.5.5 Contact resistance. When sockets are tested in accordance with 4.7.6, the contact resistance shall be as specified (see 3.1).

3.5.6 Torque (when specified).

3.5.6.1 Sockets with bushings or tapped extruded holes. When tested in accordance with 4.7.7.1, bushings shall not rotate or otherwise be loosened, and the threads of the bushings or tapped extruded holes shall not strip when subjected to the torque specified (see 3.1).

3.5.6.2 Sockets with molded-in, threaded mounting studs. When tested in accordance with 4.7.7.2, studs must not rotate in or crack housing, and the threads shall not strip when subjected to the torque specified (see 3.1).

3.5.6.3 Sockets with loose, threaded mounting studs. When tested in accordance with 4.7.7.3, studs must not rotate in or crack housing, and the threads shall not strip when subjected to the torque specified (see 3.1).

3.5.7 Vibration. When sockets are tested in accordance with 4.7.8, there shall be no evidence of any loosening or distortion of assembled parts, no chipping or cracking of the insulator body, nor any other damage to the socket assembly. Socket shall retain the test gauge throughout the test. There shall be no loss of electrical continuity for a period greater than 1 microsecond. After the vibration test is completed, the test gauge shall be fully engaged in the socket (see 3.1).

3.5.8 Mechanical shock (when specified) (see 3.1). When sockets are tested in accordance with 4.7.9, there shall be no evidence of loosening or bending of metal parts, no chipping or cracking of the insulator body, or any other damage to the socket assembly. There shall be no loss of electrical continuity for a period greater than 1 microsecond.

3.5.9 Humidity. When sockets are tested in accordance with 4.7.10, they shall pass the insulation resistance (3.5.2) and dielectric withstanding voltage (3.5.3) requirements specified (see 3.1).

3.5.10 Durability. When tested in accordance with 4.7.11, the sockets, including the contact assemblies, shall show no evidence of cracks or breaks. They shall meet the withdrawal force requirements as specified (see 3.1), the gauge retention requirements of 3.5.4, and the contact resistance requirements of 3.5.5.

3.5.11 Static load (when specified) (see 3.1). When sockets are tested in accordance with 4.7.12, there shall be no evidence of any loosening of the insulator body from the saddle or bending of the saddle.

Downloaded from http://www.everyspec.com

3.5.12 Contact tab flexure. When specified (see 3.1), sockets are tested in accordance with 4.7.13. The contact tabs shall show no evidence of breaking or cracking.

3.5.13 Thermal shock (see 4.7.14).

3.5.13.1 Plastic sockets. When plastic sockets are tested as specified in 4.7.14.1, the insulator bodies shall show no evidence of physical damage after the test is completed.

3.5.13.2 Ceramic sockets. When ceramic sockets are tested as specified in 4.7.14.2, the insulator bodies shall show no evidence of cracking or crazing. The sockets shall pass the porosity requirements of 3.5.14.

3.5.14 Porosity (ceramic sockets only). When ceramic sockets are tested in accordance with 4.7.15, the insulator-body material shall show no evidence of penetration of dye.

3.5.15 Salt spray (corrosion). When sockets are tested in accordance with 4.7.16, upon completion of the test, the metal parts of the sockets shall be inspected for evidence of peeling, chipping, blistering of metal surfaces, and for exposure of the base metal.

3.5.16 Altitude immersion (when specified) (see 3.1). When mated sockets are tested in accordance with 4.7.17, there shall be no evidence of foreign deposits on the interface and contacts. There shall be no deterioration of moisture seals. After the third cycle, while the samples are still in the salt solution, they shall meet the insulation resistance and dielectric withstanding voltage requirements of 3.5.2 and 3.5.3 respectively.

3.5.17 Resistance to solvents. When tested in accordance with 4.7.18, the sockets shall be visually inspected and shall show no evidence of cracking, crazing, discoloration, distortion or bleeding out any foreign matter from the material. Pitting shall not be allowed. The marking and color-coding shall be legible.

3.5.18 Solderability. Terminations shall withstand the test specified in 4.7.19.

3.6 Marking. Sockets and accessories shall be permanently marked in accordance with MIL-STD-1285 or, where space permits, and as indicated below:

a. Complete PIN to be marked shall be as specified (see 3.1).

b. Manufacturer's CAGE code.

c. Manufacture's date code.

d. Manufacturer's lot code (manufacturer's option).

e. Pin number 1 identifier or contact position marking as applicable (see 3.6.1).

f. JAN marking (see 3.6.2).

3.6.1 Contact-position marking. The insulator body of the socket shall be permanently marked with legible, raised or depressed, numbers or letters in accordance with MIL-STD-1285, adjacent to each contact tab, as specified. Pin numbers shall be marked on the bottom of the sockets as shown in the applicable specification sheet (see 3.1).

Downloaded from http://www.everyspec.com

3.6.2 JAN and J marking. The United States Government has adopted, and is exercising legitimate control over the certification marks "JAN" and "J", respectively, to indicate that items so marked or identified are manufactured to, and meet all the requirements of specifications. Accordingly, items acquired to, and meeting all of the criteria specified herein and in applicable specifications shall bear the certification mark "JAN" except that items too small to bear the certification mark "JAN" shall bear the letter "J". The "JAN" or "J" shall be placed immediately before the part number except that if such location would place a hardship on the manufacturer in connection with such marking, the "JAN" or "J" may be located on the first line above or below the part number. Items furnished under contracts or orders, which either permit or require deviation from the conditions or requirements specified herein or in applicable specifications shall not bear "JAN" or "J". In the event an item fails to meet the requirements of this specification and the applicable specification sheets or associated specifications, the manufacturer shall remove completely the military part number and the "JAN" or the "J" from the sample tested and also from all items represented by the sample. The "JAN" or "J" certification mark shall not be used on products acquired to contractor drawings or specifications. The United States Government has obtained Certificate of Registration Number 504,860 for the certification mark "JAN" and the Registration Number 1,586,261 for the certification mark "J".

3.7 Workmanship. Sockets and accessories shall be processed in such a manner as to be uniform in quality and shall be free from defects that will affect life, serviceability, or appearance, and shall be free from burrs and sharp edges (see 4.7.1).

3.7.1 Contact assembly. The contact assembly shall be free from burrs and from sharp cutting edges in the throat of the contact.

3.7.2 Insulator body. The insulator body shall be free from crazing, cracks, voids, pimples, chips, blisters, pinholes, or other defects, which will cause electrical or mechanical breakdown.

3.7.3 Riveting, upsetting, and spinning over. When riveting, upsetting, or spinning-over processes are employed, there shall be no evidence of fatigue or undue deformation of uninvolved surfaces of the material being riveted, upset, or spun over. After the particular fixing process, there shall be no evidence of fatigue, cracking, chipping, or peeling of the material in which the riveted, upset, or spun-over part is being set.

4. VERIFICATION

4.1 Classification of inspections. The inspection requirements specified herein are classified as follows:

a. Qualification inspection (see 4.4).

b. Quality conformance inspection (see 4.6).

c. Materials inspection (see 4.3).

4.2 Inspection conditions. Unless otherwise specified herein, all inspections shall be performed in accordance with the test conditions specified in the "GENERAL REQUIREMENTS" of MIL-STD-1344.

4.2.1 Verification testing. The following identified tests and test methods assure socket integrity within typical operating conditions and applications. Alternate commercial industry standard test methods are allowed, however when an alternate method is used, the alternate method shall be coordinated with the qualifying activity prior to performance of the test. The test methods described herein are proven methods and shall be the referee method in cases of dispute.

Downloaded from http://www.everyspec.com

4.2.2 Test equipment and inspection facilities. Test and measuring equipment and inspection facilities of sufficient accuracy, quality and quantity to permit performance of the required inspection shall be established and maintained by the contractor. The establishment and maintenance of a calibration system to control the accuracy of the measuring and test equipment shall be in accordance with ANSI/NCSL Z540.1.

4.2.3 Traceability requirements. The manufacturer shall make available to the qualifying activity the procedure whereby the lot date codes are assigned that incorporate traceability. The following is a list of raw material/component parts subject to traceability:

a. Ceramic or plastic insulator material (lot by lot).

b. Crimp contacts or terminals (when applicable).

c. Plastic washers (when applicable).

d. Mounting saddles, strap nuts, and center shields (when applicable).

4.2.4 Statistical process control (SPC). A SPC program shall be established and maintained in accordance with EIA-557. Evidence of such compliance shall be verified by the qualifying activity as a prerequisite for qualification and retention of qualification.

4.3 Materials inspection. Materials inspection shall consist of certification supported by verifying data that the materials, as specified by example, in table I, and on the specification sheets (see 3.1), used in fabricating the sockets, are in accordance with the applicable referenced specifications or requirements prior to such fabrication (see 3.3.2, 3.3.3, 3.3.4, 3.3.5, 4.7.1, and 6.2).

TABLE I. Materials inspection.

Example reference material	Requirement paragraph	Material specification
Insulating material:		
Ceramic	3.3.2	ASTM D116, ASTM D150
Plastic	3.3.3	ASTM D5948, ASTM D4067 ASTM D5205 or MIL-M-24519
Parts		
Beryllium copper	3.3.4.1	ASTM B194
Gold	3.3.4.1.1	ASTM B488
Brass, plated or dipped	3.3.5	ASTM B36/36M
Tin-lead	3.3.5	SAE-AMS-P-81728
Plastic, laminated	3.3.3.1	ASTM D709

Downloaded from http://www.everyspec.com

4.4 Qualification inspection. Qualification inspection shall be performed at a laboratory acceptable to the Government (see 6.3) on sample units produced with equipment and procedures normally used in production.

4.4.1 Sample selection. The sample sockets and accessories submitted for qualification approval shall be produced with the contractor's regular production equipment and procedures; shall be selected from a production run after manufacturer's normal quality inspection has been performed; and shall not be subjected to any special preliminary screening test. Use of alternate materials, platings, and processes (see 3.1.1) shall be identified for inclusion in the product test documentation. Eighteen (twelve for sockets using qualified contacts) specimens of each type for which approval is sought shall be submitted for qualification tests.

4.4.2 Test routine. The sample sockets and accessories submitted for qualification approval shall be subjected to the qualification tests listed in table II, in the order shown.

a. All 18 (12 for sockets using qualified contacts if applicable) sample sockets and accessories shall be subjected to the group I tests of table II.

b. After completion of the group I tests, the samples shall be divided into 3 groups of 6 each (2 groups for sockets using qualified contacts).

   (1) One group of sample units shall be subjected to the group II tests.

   (2) One group of sample sockets shall be subjected to the group III tests (sockets not using qualified contacts only).

   (3) One group of sample sockets shall be subjected to the group IV tests.

c. Upon completion of group I through group IV tests, all 18 (12 for sockets using qualified contacts) sample sockets shall be subjected to the group V tests. Grouping for qualification shall be as specified in table III.

Downloaded from http://www.everyspec.com

TABLE II. Qualification inspection.

Inspection	Requirement paragraph	Method paragraph
Group I (all specimens)		
Visual and mechanical inspection	3.1, 3.3, 3.4, 3.6 and 3.7	4.7.1
Insertion and withdrawal force	3.5.1	4.7.2
Insulation resistance	3.5.2	4.7.3
Dielectric withstanding voltage	3.5.3	4.7.4
Gauge retention	3.5.4	4.7.5
Contact resistance	3.5.5	4.7.6
Torque (when specified)	3.5.6	4.7.7
Group II (6 specimens)		
Vibration	3.5.7	4.7.8
Mechanical shock (when specified)	3.5.8	4.7.9
Gauge retention	3.5.4	4.7.5
Contact resistance	3.5.5	4.7.6
Humidity	3.5.9	4.7.10
Insulation resistance	3.5.2	4.7.3
Dielectric withstanding voltage	3.5.3	4.7.4
Altitude immersion (when specified)	3.5.16	4.7.17
Salt spray (corrosion)	3.5.15	4.7.16
Resistance to solvents	3.5.17	4.7.18
Group III (6 specimens) 1/		
Durability	3.5.10	4.7.11
Insertion and withdrawal force	3.5.1	4.7.2
Gauge retention	3.5.4	4.7.5
Contact resistance	3.5.5	4.7.6
Contact tab flexure (when specified)	3.5.12	4.7.13
Group IV (6 specimens)		
Static load (when specified)	3.5.11	4.7.12
Thermal shock (plastic sockets)	3.5.13.1	4.7.14.1
Thermal shock (ceramic sockets)	3.5.13.2	4.7.14.2
Porosity (ceramic sockets only)	3.5.14	4.7.15
Solderability	3.5.18	4.7.19
Group V (all specimens)		
Visual and mechanical inspection	3.1, 3.3, 3.4, 3.6 and 3.7	4.7.1

1/ Not required for sockets tested with qualified contacts (example M39029/5-116).

Downloaded from http://www.everyspec.com

TABLE III. Grouping for qualification. 1/

Column I	Column II	Column III 2/
Manufacturer will submit for qualification (see 4.5)	Specimens to be submitted	Successful qualification of items in column I, will qualify the following:
MIL-DTL-12883/11	12	MIL-DTL-12883/2, /3, /5, /6, /8, /10, and /11

1/ Qualification of one socket type constitutes qualification of all others of the same group that follow it in the group listing.
2/ One sample of the items listed in column III shall also be subjected to the following requirements:

a. Visual and mechanical inspection (see 4.7.1).

b. Certification shall be made available to verify that these items were manufactured having the same materials and finishes as those items specified under column I.

4.4.3 Failures. One or more failures shall be cause for refusal to grant qualification approval.

4.5 Verification of qualification. To retain qualification, the contractor shall make available a report at 12-month intervals to the qualifying activity. The qualifying activity shall establish the initial report availability date. The report shall consist of:

a. A summary of the results of the tests performed for inspection of product for delivery; group A, indicating as a minimum the number of lots that have passed and the number that have failed. The results of tests of all reworked lots shall be identified and accounted for.

b. The results of tests performed for periodic inspection; group B, including the number and mode of failures. The summary shall include results of all periodic inspection tests performed and completed during the 36-month period. If the test results indicate nonconformance with specification requirements, and corrective action acceptable to the qualifying activity has not been taken, action may be taken to remove the failing product from the qualified products list.

c. The contractor shall immediately notify the qualifying activity if at any time during the 36-month period that the inspection data indicates failure of the qualified product to meet the requirements of this specification.

4.6 Quality conformance inspection.

4.6.1 Inspection of product for delivery. Inspection of product for delivery shall consist of group A inspection. Except as specified in 4.6.2.1.3, delivery of products, which have passed the group A inspection, shall not be delayed pending the results of group B inspection.

4.6.1.1 Inspection lot. An inspection lot, as far as practicable, shall consist of all sockets and accessories of the same military PIN (see 1.2.1), produced under essentially the same conditions, and offered for inspection at one time.

4.6.1.2 Group A inspection. Group A inspection shall consist of the inspections specified in table IV, on the same set of sample units in the order shown.

Downloaded from http://www.everyspec.com

TABLE IV. Group A inspection.

Inspection	Requirement paragraph	Method paragraph
Visual and mechanical inspection 1/	3.1, 3.3, 3.4, 3.6, and	4.7.1
Torque (when specified)	3.7	4.7.7
Insertion and withdrawal force 2/	3.5.6	4.7.2
Insulation resistance	3.5.1	4.7.3
Dielectric withstanding voltage	3.5.2	4.7.4
Sea level	3.5.3	4.7.4.1

1/ Only two samples each for physical dimensions. If either of the two samples fails to meet the requirements, the complete lot sample shall then be inspected for physical dimensions.
2/ Not required for sockets using qualified contacts.

4.6.1.2.1 Sampling plan. Statistical sampling and inspection for the samples submitted for group A inspection shall be on a lot by lot basis with sample sizes as listed in table V. Any occurrence of a failure shall be considered as failure of the lot.

TABLE V. Lot and sample size.

Lot size	Sample size
1 to 5	all
6 to 50	5
51 to 90	7
91 to 150	11
151 to 280	13
281 to 500	16
501 to 1200	19
1,201 to 3200	23
3,201 to 10000	29
10,001 and over	35

4.6.1.2.2 Rejected lots. If an inspection lot is rejected, the manufacturer may rework it to correct the defects, or screen out the defective units, and resubmit for reinspection. Resubmitted lots shall be inspected using tightened inspection and shall not thereafter be tendered for acceptance unless the former rejection or requirement of correction is disclosed. Such lots shall be separate from new lots and shall be clearly identified as reinspected lots.

4.6.1.2.3 Disposition of sample units. Sample units, which have passed the entire group A inspections, may be delivered on the contract if the lot is accepted and the sample units are still within the specification tolerances.

4.6.2 Periodic inspection. Periodic inspection shall consist of group B. Except where the results of these inspections show noncompliance with the applicable requirements (see 4.6.2.1.3), delivery of products, which have passed group A inspection shall not be delayed pending the results of these periodic inspections.

Downloaded from http://www.everyspec.com

4.6.2.1 Group B inspection. Group B inspection shall consist of the tests specified in table VI. Group B inspection shall be made on sample units selected from inspection lots, which have passed the group A inspection.

TABLE VI. Group B inspection.

Inspection	Requirement paragraph	Method paragraph
Subgroup 1		
Vibration	3.5.7	4.7.8
Mechanical shock (when specified)	3.5.8	4.7.9
Gauge retention	3.5.4	4.7.5
Contact resistance	3.5.5	4.7.6
Humidity	3.5.9	4.7.10
Insulation resistance	3.5.2	4.7.3
Dielectric withstanding voltage	3.5.3	4.7.4
Salt spray (corrosion)	3.5.15	4.7.16
Subgroup 2 1/ 2/		
Durability	3.5.10	4.7.11
Insertion and withdrawal force	3.5.1	4.7.2
Gauge retention	3.5.4	4.7.5
Contact resistance	3.5.5	4.7.6
Contact tab flexure (when specified)	3.5.12	4.7.13
Subgroup 3		
Static load (when specified)	3.5.11	4.7.12
Thermal shock	3.5.13	4.7.14
Porosity (ceramic sockets only)	3.5.14	4.7.15

1/ Six specimens for each test.
2/ Not required for sockets using qualified contacts.

4.6.2.1.1 Sampling plan. Eighteen sockets of each specification sheet shall be selected every 36 months. No failures are permitted.

4.6.2.1.2 Disposition of sample units. Sample units, which have been subjected to group B inspection, shall not be delivered on the contract or order.

4.6.2.1.3 Noncompliance. If a sample fails to pass group B inspection, the contractor shall take corrective action on the materials or processes, or both, as warranted, and on all units of product which can be corrected and which were manufactured under essentially the same conditions, with essentially the same materials, processes, etc., and which are considered subject to the same failure. Acceptance of the product shall be discontinued until corrective action, acceptable to the Government, has been taken. After the corrective action has been taken, group B inspection shall be repeated on additional sample units (all inspection, or the inspection, which the original sample failed, at the option of the Government). Group A inspections may be reinstituted; however, final acceptance shall be withheld until the group B reinspection has shown that the corrective action was successful. In the event of failure after reinspection, information concerning the failure and corrective action shall be made available to the cognizant inspection activity and to the qualifying activity.

Downloaded from http://www.everyspec.com

4.7 Methods of inspection.

4.7.1 Visual and mechanical inspection. Sockets and accessories shall be inspected to verify that the materials, design, construction, physical dimensions, marking, and workmanship are in accordance with the applicable requirements (see 3.1, 3.3, 3.4, 3.6, and 3.7).

4.7.2 Insertion and withdrawal force (see 3.5.1). After three unmonitored insertions and withdrawals, the force required to fully insert and withdraw the pins of the applicable insertion-and-withdrawal test gauge (see appendix) shall be measured. The following details shall apply:

a. Before each insertion, the test-gauge pins shall be cleaned with a grease-removing solution and wiped with a clean dry cloth.

b. The measuring equipment shall conform to the following:

(1) The vertical axis of the test gauge shall coincide with the vertical axis of the socket.

(2) The test gauge shall travel along the vertical axis of the socket.

(3) The speed of insertion of the test-gauge pins into the socket contacts shall not exceed 2 inches (50.8 mm) per minute for constant-speed machines, or the rate of loading shall not exceed 80 pounds (36.3 kg) per minute for contact rate-of-force machines.

(4) Scale mechanism shall have no dashpots or other damping devices.

(5) Scales shall be calibrated in .25 pound (11.3 kg) steps or less, and shall be accurate to within 5 percent.

c. After testing sockets shall meet the requirements of 3.5.1.

Downloaded from http://www.everyspec.com

4.7.3 Insulation resistance (see 3.5.2). Sockets shall be tested in accordance with method 3003, of MIL-STD-1344. The following details and exceptions shall apply:

a. Mounting: Mounted on a .125 inch (3.17 mm) metal plate; a pin of the specified diameter (see 3.1), shall be placed in each contact. No soldering to the contact tabs shall be allowed.

b. Points of measurements:

(1) Connect all odd-numbered contacts together.

(2) Connect all even-numbered contacts together.

(3) Measure between the odd-numbered contacts (tied together) and the even-numbered contacts (tied together).

c. After testing sockets shall meet the requirements of 3.5.2.

d. Points of measurements:

(1) Connect all contacts together.

(2) Connect all metallic parts (except contacts) of the socket together.

(3) Measure between all contacts (tied together), and the metallic parts of the socket (tied together), with the positive test probe on the contacts.

e. After testing sockets shall meet the requirements of 3.5.2.

4.7.4 Dielectric withstanding voltage (see 3.5.3). Sockets shall be tested in accordance with method 3001 of MIL-STD-1344.

4.7.4.1 Sea level (normal atmospheric pressure). Sockets shall be tested as specified in 4.7.4. The following details and exceptions shall apply:

a. Mounting: Mounted on a .125 inch (3.17 mm) metal plate; a pin of the specified diameter (see 3.1), shall be placed in each contact and held there by means of a pin-holding device. No soldering to the contact tabs shall be allowed.

b. Magnitude and nature of test voltage: As specified (see 3.1).

c. Duration of application of test voltage: 60 seconds.

d. Points of application:

(1) Connect all odd-numbered contacts together.

(2) Connect all even-numbered contacts together.

(3) Measure between the odd-numbered contacts (tied together) and the even-numbered contacts (tied together).

e. After testing sockets shall meet the requirements of 3.5.3.

Downloaded from http://www.everyspec.com

f. Points of application:

(1) Connect all contacts together.

(2) Connect all metallic parts (except contacts) of the socket together.

(3) Measure between all contacts (tied together), and the metallic parts of the socket (tied together), with the positive test probe on the contacts.

g. After testing sockets shall meet the requirements of 3.5.3.

4.7.4.2 High altitude. Unless otherwise specified (see 3.1), sockets shall be tested as specified in 4.7.4, while being maintained at a barometric pressure simulating an altitude of 50,000 feet (i.e. 87 torr). The following details and exceptions shall apply:

a. Period of time at reduced pressure prior to application of dielectric potential: Long enough for all entrapped air in the chamber to escape.

b. Dielectric potential: As specified (see 3.1).

c. Duration of application of test voltage: 60 seconds.

d. Points of application:

(1) Connect all odd-numbered contacts together.

(2) Connect all even-numbered contacts together.

(3) Measure between the odd-numbered contacts (tied together) and the even-numbered contacts (tied together).

e. After testing sockets shall meet the requirements of 3.5.3.

f. Points of application:

(1) Connect all contacts together.

(2) Connect all metallic parts (except contacts) of the socket together.

(3) Measure between all contacts (tied together), and the metallic parts of the socket (tied together), with the positive test probe on the contacts.

g. After testing sockets shall meet the requirements of 3.5.3.

4.7.5 Gauge retention (see 3.5.4). Appropriate gauge retention by each contact of the socket under test shall be determined by using the applicable contact-retention test gauge (see appendix). The probe end of the gauge shall be inserted into and withdrawn from the particular contact three times; the test end of the gauge shall then be inserted into the contact, and the socket shall be so held that the gauge is in a pendant position under the socket. After testing sockets shall meet the requirements of 3.5.4.

Downloaded from http://www.everyspec.com

4.7.6 Contact resistance (see 3.5.5). The contact resistance between each contact and the respective pin of the applicable contact-resistance test gauge (see appendix) shall be tested in accordance with method 3004 of MIL-STD-1344. After testing sockets shall meet the requirements of 3.5.5. The following details shall apply:

a. The contacts shall be mated and unmated a maximum of three times before making the measurement.

b. The contact resistance shall be read while drawing the specified maximum rated current (see 3.1), through the contact and pin.

c. There shall be no soldering to the contact tabs for this test.

4.7.7 Torque (when specified) (see 3.5.6).

4.7.7.1 Sockets with bushings or tapped extruded holes (see 3.5.6.1).

a. A twisting force equal to the specified force (see 3.1) shall be applied to the bushing or tapped extruded hole with a torque wrench, or equivalent.

b. To perform the test, a hardened-steel stud with one end having a .138-32 NC-2A thread, .250 inch (6.35 mm) long, shall be engaged in the chassis end of the bushing or tapped extruded hole, and the twisting force shall be applied through the stud.

c. The shoulder of the stud bearing against the saddle of the socket under test shall not exceed .187 inch (4.75 mm) diameter.

d. After testing sockets shall meet the requirements of 3.5.6.1.

4.7.7.2 Sockets with molded-in, threaded mounting studs (see 3.5.6.2).

a. A twisting force equal to the specified force (see 3.1) shall be applied to the stud with a torque wrench, or equivalent.

b. The torque shall be applied through a threaded test adapter (see appendix).

c. The socket shall be supported in such a manner as to not apply outside forces to the socket flanges in which the studs are molded. Care must be exercised not to apply forces, other than twisting, to the stud.

d. After testing sockets shall meet the requirements of 3.5.6.2

Downloaded from http://www.everyspec.com

4.7.7.3 Sockets with loose, threaded mounting studs (see 3.5.6.3).

a. A twisting force equal to the specified force (see 3.1) shall be applied to the stud with a torque wrench, or equivalent.

b. The torque shall be applied through a threaded test adapter (see appendix).

c. The nut, which affixes the stud to the housing, must be held to prevent it from rotating at the time the test force is being applied.

d. The socket shall be supported in such a manner so as to not apply outside forces to the socket flanges in which the studs are fastened. Care must be exercised not to apply forces, other than twisting, to the stud.

e. After testing sockets shall meet the requirements of 3.5.6.3.

4.7.8 Vibration (see 3.5.7). Sockets shall be tested in accordance with method 2005 of MIL-STD-1344. The following details and exceptions shall apply:

a. Mounting: Sockets shall be secured, face up, to a horizontal mounting plate, and the applicable vibration test gauge (see 3.1 and appendix), shall be inserted into the socket.

b. Initial measurements: Not applicable.

c. Motion: Horizontal motion only, in a direction at right angles to the long axis of the socket or saddle.

d. Length of time: 2-1/2 hours.

e. Measurements during vibration: Electrical continuity shall be monitored continuously throughout the test.

f. Test condition VI, letter J.

g. After testing sockets shall meet the requirements of 3.5.7.

4.7.9 Mechanical shock (when specified) (see 3.1 and 3.5.8). Sockets shall be tested in accordance with method 2004 of MIL-STD-1344. The following details shall apply:

a. Mounting method: Sockets shall be secured, face up, to a horizontal mounting plate, and the applicable shock test gauge (see 3.1), shall be inserted into the socket.

b. Test condition E.

c. Measurements during shock test: Electrical continuity shall be monitored continuously throughout the test.

d. After testing sockets shall meet the requirements of 3.5.8.

Downloaded from http://www.everyspec.com

4.7.10 Humidity (see 3.5.9). Sockets shall be tested in accordance with method 1002 of MIL-STD-1344, test condition II omitting steps 7a and 7b. After testing sockets shall meet the requirements of 3.5.9. The following details shall apply:

a. Initial measurements: Not applicable.

b. Loading voltage: None.

c. Drying period: 5 minutes maximum. Excess water may be shaken off during this period.

4.7.11 Durability (see 3.5.10). Sockets shall be tested in accordance with method 2015 of MIL-STD-1344. The applicable durability test gauge (see appendix) shall be fully inserted into and withdrawn from the socket 150 times. The socket shall then be inspected for damage (see 3.5.10).

4.7.12 Static load (when specified) (see 3.5.11).

a. Sockets shall be mounted in normal position on a .125 inch (3.17 mm) metal plate.

b. The specified force (see 3.1) shall be applied perpendicular to the plane of the saddle, first to the top of the insulator body and then to the bottom of the insulator body.

c. The sockets shall then be inspected for damage (see 3.5.11).

4.7.13 Contact tab flexure (when specified) (see 3.1 and 3.5.12). Each contact tab of the socket under test shall be tested in accordance with method 211, test condition B, MIL-STD-202. Number of bending operations shall be five. After testing sockets shall meet the requirements of 3.5.12.

4.7.14 Thermal shock (see 3.5.13).

4.7.14.1 Plastic sockets (see 3.5.13.1). Unless otherwise specified (see 3.1), sockets shall be subjected to temperature cycling in accordance with method 1003 of MIL-STD-1344, test condition A, except that temperature extremes shall be -65°C +0°C, -5°C and +125°C +3°C, -0°C. After testing, sockets shall meet the requirements of 3.5.13.1.

4.7.14.2 Ceramic sockets (see 3.5.13.2). Unless otherwise specified (see 3.1), ceramic sockets shall be subjected to 20 successive cycles of immersion in water, each cycle consisting of a 10 minute immersion in a bath of water at a temperature of 4°C +0°C, -4°C, followed by a 10 minute immersion in a bath of water at a temperature of 94°C +6°C, -0°C. Upon completion of the last cycle, sockets shall be permitted to dry at room temperature, and shall then be inspected for evidence of damage. After testing, sockets shall meet the requirements of 3.5.13.2.

Downloaded from http://www.everyspec.com

4.7.15 Porosity (ceramic sockets only) (see 3.5.14). Test specimens shall be complete ceramic socket bodies used in the fabrication of production units, or complete ceramic socket assemblies. Samples of the ceramic material alone are not acceptable as test specimens. The following details shall apply:

a. The apparatus shall consist of a suitable pressure chamber of such dimensions as to accommodate the specimens when immersed in the dye solution, with arrangements for obtaining and maintaining the required pressure for the required time.

b. A solution of 1 gram of basic fuchsine in 1 liter of 50 percent alcohol shall be used. If a denatured alcohol is used, one should be selected which does not react with the dye to cause fading of the color.

(1) The specimens shall be placed in the pressure chamber and completely immersed in the fuchsine solution.

(2) A pressure of 4,000 pounds per square inch (psi) (27.6 megapascal) ± 10 percent, for approximately 15 hours, or an optional pressure of 10,000 psi (68.9 megapascal), ± 10 percent, for 6 hours shall be used.

(3) Immediately after the test pressure has been relieved, the specimens shall be removed from the chamber, thoroughly dried, and broken for visual inspection under 10x magnification.

c. After testing sockets shall meet the requirements of 3.5.14.

4.7.16 Salt spray (corrosion) (see 3.5.15). Unmated sockets shall be tested in accordance with method 1001 of MIL-STD-1344, test condition B. After testing sockets shall meet the requirements of 3.5.15.

4.7.17 Altitude immersion (when specified) (see 3.5.16). Sockets shall be tested in accordance with method 1004 of MIL-STD-1344 (see 3.5.16). After the third cycle, while the samples are still in the salt solution, the insulation resistance and dielectric withstanding voltage tests of 4.7.3 and 4.7.4.1, respectively, shall be performed. After testing sockets shall meet the requirements of 3.5.16.

4.7.18 Resistance to solvents (3.5.17) . Sockets shall be tested in accordance with MIL-STD-202, method 215. After testing sockets shall meet the requirements of 3.5.17.

4.7.19 Solderability (see 3.5.18). Socket contacts shall be tested in accordance with MIL-STD-202, method 208. After testing sockets shall meet the requirements of 3.5.18.

5. PACKAGING

5.1 Packaging. For acquisition purposes, the packaging requirement shall be as specified in the contract or order (see 6.2). When actual packaging of material is to be performed by DoD personnel, these personnel need to contact the responsible packaging activity to ascertain requisite packaging requirements. Packaging requirements are maintained by the Inventory Control Point's packaging activity within the Military Department or Defense Agency, or within the Military Department's System Command. Packaging data retrieval is available from the managing Military Department’s or Defense Agency’s automated packaging files, CD-ROM products, or by contacting the responsible packaging activity.

Downloaded from http://www.everyspec.com

6. NOTES

(This section contains information of a general or explanatory nature that may be helpful, but is not mandatory.)

6.1 The sockets covered by this specification are military unique because they must be able to operate satisfactory under high altitude 50,000 feet (15.2 km), vibration 36.6 rms G min, 50 g's of shock, and temperatures ranging from - 65 to +125 degrees Celsius. Commercial electronic components are not designed to withstand such extreme and sudden environmental conditions and would experience catastrophic failure.

6.2 Intended use. All sockets and accessories covered by this specification are intended for application in electronic and electrical circuits under conditions that are not in excess of the ratings established herein (see 3.1), for the particular socket or accessory. Where application of sockets or accessories covered by this specification is contemplated for conditions in excess of those stated above, it is advisable that approval of the cognizant bureau or service be obtained.

6.2.1 Tube shields. Tube shields, when required in conjunction with sockets, should be in accordance with MIL-S-24251.

6.2.2 Tin whisker growth. The use of pure tin may exhibit tin whisker growth problems (days to months to years) after manufacture. Tin whiskers can develop under typical operating conditions on any product type that uses lead-free pure tin coatings. Conformal coatings applied over top of a whisker-prone surface will not prevent the formation of tin whiskers. Alloys of 3 percent lead have shown to inhibit the growth of tin whiskers.

6.3 Acquisition requirements. Acquisition documents must specify the following:

a. Title, number, and date of the specification.

b. Title, number, and date of the applicable specification sheet, and the complete PIN (see 1.2.1 and 3.1).

c. Certificate of compliance covering materials, when required.

d. Issue of DODISS to be cited in the solicitation, and if required, the specific issue of individual documents referenced (see 2.1 and 2.2).

6.4 Qualification. With respect to products requiring qualification, awards will be made only for products, which are, at the time of award of contract, qualified for inclusion in Qualified Products List QPL No. 12883 whether or not such products have actually been so listed by that date. The attention of the contractors is called to these requirements, and manufacturers are urged to arrange to have the products that they propose to offer to the Federal Government tested for qualification in order that they may be eligible to be awarded contracts or purchase orders for the products covered by this specification. Information pertaining to qualification of products may be obtained from the Defense Supply Center Columbus, ATTN: DSCC-VQP, P.O. Box 3990, Columbus, Ohio 43216-5000. Application procedures should conform to the "Provisions Governing Qualification" (see 6.3.1).

6.4.1 Provisions governing qualification. Copies of "Provisions Governing Qualification" may be obtained upon application to Standardization Document Order Desk, Building 4D, 700 Robbins Avenue, Philadelphia, PA 19111-5094.

Downloaded from http://www.everyspec.com

6.5 Environmentally preferable material. Environmentally preferable materials should be used to the maximum extent possible that the material meets or exceeds the operational and maintenance requirements, and promotes economically advantageous life cycle costs. Table XVII lists the Environmental Protection Agency (EPA) top seventeen hazardous materials targeted for major usage reduction. If any of these hazardous materials are required, it is recommended that it be used only when other materials cannot meet performance requirements.

TABLE XVII. EPA top seventeen hazardous materials.

Benzene	Dichloromethane	Tetrachloroethylene
Cadmium and compounds	Lead and compounds	Toluene
Carbon Tetrachloride	Mercury and compounds	1,1,1 - Trichloroethane
Chloroform	Methyl Ethyl compounds	Trichloroethylene
Chromium and compounds	Methyl Isobutyl Ketone	Xylenes
Cyanide and compounds	Nickel and compounds	

6.6 Subject term (keyword listing).

Beryllium copper
Ceramic
Contact tabs
Contacts
Fuchsine
Gauge retention
Insertion forces
Lead
Nickel
Plastic
Porosity
Sockets
Static load
Torque
Withdrawal forces

Downloaded from http://www.everyspec.com

APPENDIX

TEST GAUGES FOR SOCKETS

10. SCOPE

10.1 Scope. This appendix details the test gauges to be used in the test procedures on sockets covered by this specification. Where particular designs of gauges for specific tests are not established, indication is made for the use of satisfactory test-gauge substitute. This appendix is a mandatory part of the specification. The information contained herein is intended for compliance.

10.2 Gauges.

10.2.1 Identification of gauges. Gauges are identified by means of a descriptive title that indicates the associated test (see figures 1 to 5, inclusive). Additionally, the gauges are identified herein, in regard to their selected use with particular sockets, by means of a contact arrangement applicable to the socket design. The essential contact arrangement is depicted in the applicable specification sheet for the respective socket.

10.2.2 Supply of gauges. The laboratory or activity that performs the tests will be responsible for supply of all necessary test fixtures and gauges.

20. APPLICABLE DOCUMENTS

20.1 Non-Government publication. The following document forms a part of this document to the extent specified herein. Unless otherwise specified, the issues of the documents which are DoD adopted are those listed the issue of the DODISS cited in the solicitation. Unless otherwise specified, the issues of documents not listed in the DODISS are the issues of the document cited in the solicitation (see 6.2).

AMERICAN NATIONAL STANDARDS INSTITUTE (ANSI)

ANSI B46.1 - Surface Texture (Surface Roughness, Waviness and Lay).

(Application for copies should be addressed to the American National Standards Institute, 11 West 42nd Street, New York, NY 10036.)

AMERICAN SOCIETY OF TESTING MATERIALS

ASTM B16 - Rod, Bar, and Shapes for use in Screw Machines, Free Cutting Brass.

(Application for copies should be addressed to the American Society for Testing and Materials, 1916 Race Street, Philadelphia, PA 19103.)

SOCIETY OF AUTOMOTIVE ENGINEERS (SAE)

SAE AMS 4120 - Aluminum Alloy, Rolled or Cold Finished Bars, Rods, and Wire, 4.4Cu – 1.5Mg – 0.60Mn (2024), Solution Heat Treated and Naturally Aged (T4), Solution Heat Treated, Cold Worked, and Naturally Aged (T351).
SAE J438 - Tool and Die Steels.

(Application for copies should be addressed to the Society of Automotive Engineers, 400 Commonwealth Drive, Warrendale, PA 15096-0001.)

(Non-Government standards and other publications are normally available from the organizations that prepare or distribute the documents. These documents also may be available in or through libraries or other informational services.)

20.2 Order of precedence. In the event of a conflict between the text of this appendix and the references cited herein, the text of this appendix shall take precedence.

Downloaded from http://www.everyspec.com

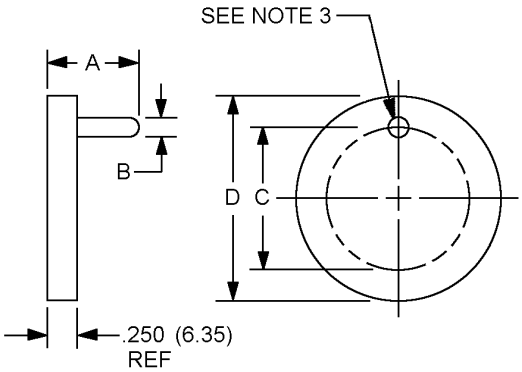

For MIL-DTL-12883/5 sockets

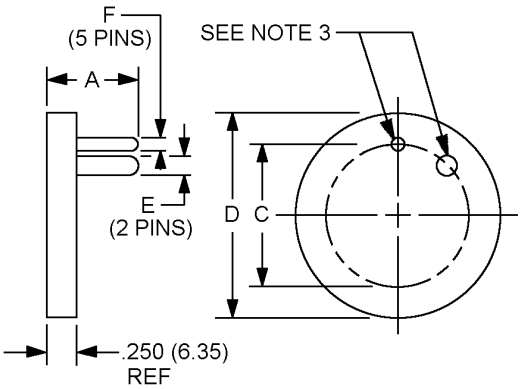

For MIL-DTL-12883/1, MIL-DTL-12883/2, and MIL-DTL-12883/3 sockets + /8, /9, /10, & /11

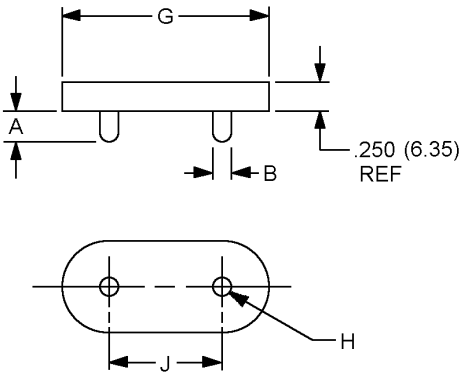

For MIL-DTL-12883/6 sockets

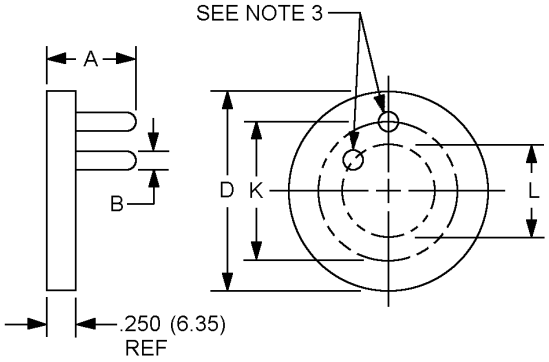

For MIL-DTL-12883/4 sockets

NOTES:

1. Dimensions are in inches.
2. The quantity of pins and their angular distribution around the pin circle, and the values for dimension A, B, E, F, G, H, J, K and L, are as specified in the specification sheet for the particular socket.
3. The pins shall be steel, hardened to Rockwell C55-65 and polished to a 4 microinch (0.102 µm) finish in accordance with ANSI B46.1. Ends of pins shall be hemispherical, and the hemisphere shall be smoothly blended into the pin cylinder without shoulders or tapering. The end of the pin may be flat for not more than one-quarter of the pin cylinder.
4. All pins shall be affixed to gauge body, or to steel retainer when present, within .001 of true position at the base and at the extremity of the pins.

FIGURE 1. Insertion/withdrawal and durability test gauges.

Downloaded from http://www.everyspec.com

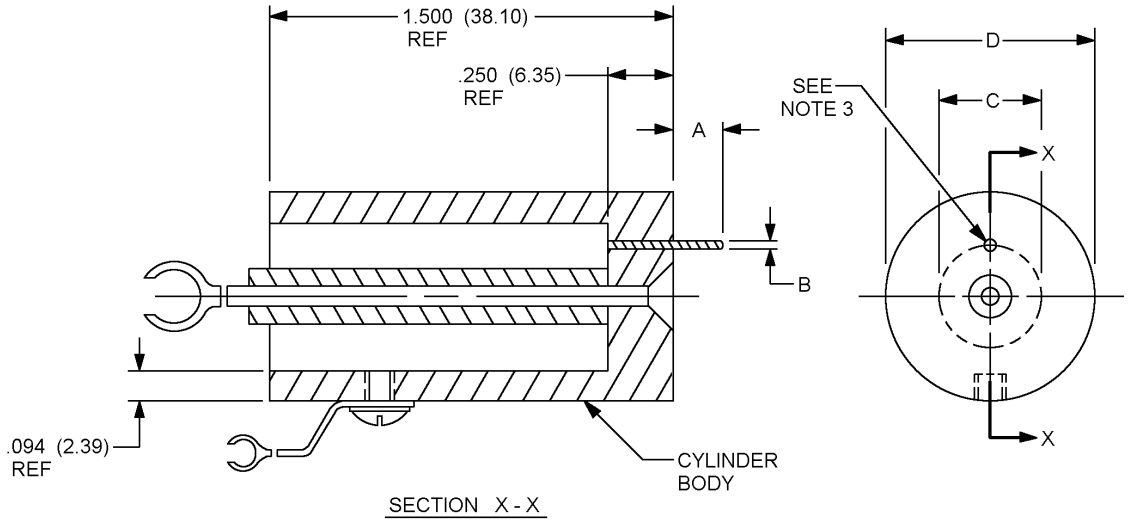

For all sockets except MIL-DTL-12883/4, MIL-DTL-12883/5, and MIL-DTL-12883/6.

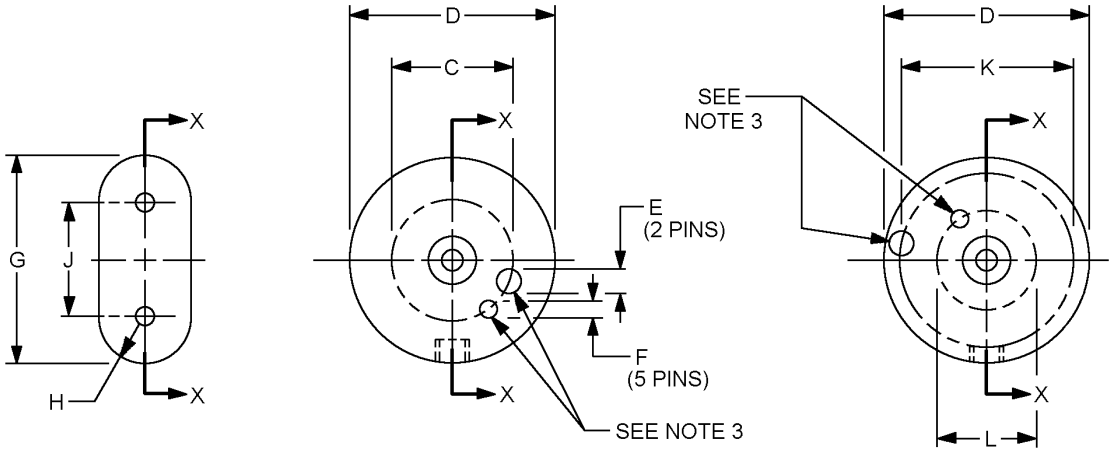

For MIL-DTL-12883/4 sockets For MIL-DTL-12883/5 sockets For MIL-DTL-12883/6 sockets

FIGURE 2. Contact/resistance test gauges.

Downloaded from http://www.everyspec.com

NOTES:

1. Dimensions are in inches.
2. Metric equivalents are given for information only.
3. The quantity of pins and their angular distribution around the pin circle, and the values for dimension A, B, B1, B2, C, C1, C2, and D, are as specified in the specification sheet for the particular socket.
4. The cylinder body shall be brass conforming to ASTM B16.
5. The pins shall be carbon steel excluding corrosion-resistant steels, hardened to Rockwell C55-65 and polished to a 16 microinch (0.406 μm) finish in accordance with ANSI B46.1. Ends of pins shall be hemispherical, and the hemisphere shall be smoothly blended into the pin cylinder without shoulders or tapering. The end of the pin may be flat for not more than one-quarter of the pin cylinder.
6. All pins shall be affixed to gauge body, or to steel retainer when present, within .001 of true position at the base and at the extremity of the pins.
7. One electrical connection is made to the center of the gauge and the other connection to the side of the gauge. Details optional.

FIGURE 2. Contact/resistance test gauges - Continued.

Downloaded from http://www.everyspec.com

APPENDIX

Inches	mm
.005	0.13
.031	0.79
.062	1.57
.094	2.39
.0945	2.40
.125	3.18
.188	4.78
.250	6.35
.312	7.92
.317	8.05
.438	11.13
.625	15.88
.687	17.45
.688	17.48
.875	22.23
1.125	28.58
1.625	41.28
2.265	57.53

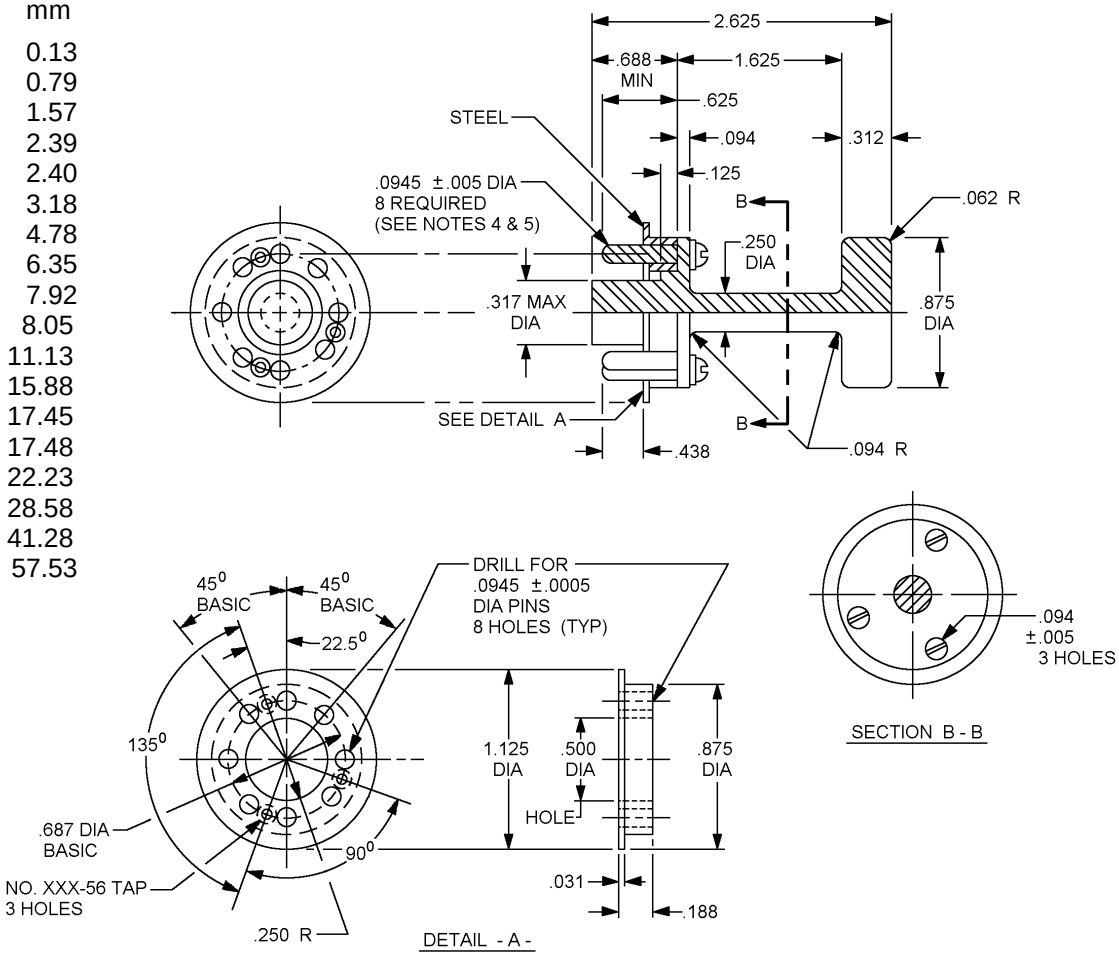

NOTES:

1. Dimensions are in inches.
2. Metric equivalents are given for information only.
3. Unless otherwise specified, tolerances are ±.016 (0.41 mm) for three-places decimals and ±1/2° on angles.
4. The pins shall be steel, hardened to Rockwell C55-65 and polished to a 4 microinches (0.102) finish in accordance with ANSI B46.1. Ends of pins shall be hemispherical, and the hemisphere shall be smoothly blended into the pin cylinder without shoulders or tapering. The end of the pin may be flat for not more than one-quarter of the pin diameter.
5. All pins shall be affixed to gauge body, or to steel retainer when present, within .001 of true position at the base and at the extremity of the pins.
6. The body of the gauge shall be aluminum in accordance with SAE AMS-4120, type 2024 - T4.

FIGURE 3. Vibration test gauges.

Downloaded from http://www.everyspec.com

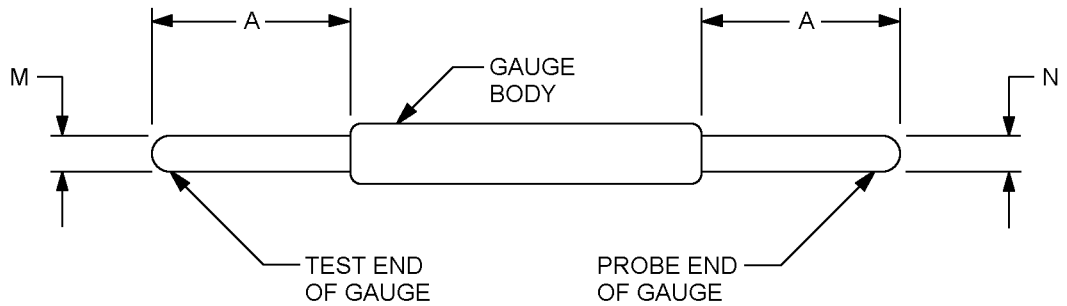

NOTES:

1. The values for dimensions A, M, and N, and the weight of gauge, are in the applicable specification sheet for the particular socket.
2. The gauge body shall be metal.
3. The pins shall be steel, hardened to Rockwell C55-65 and polished to a 4 microinch (0.102 µm) finish in accordance with ANSI B46.1. Ends of pins shall be hemispherical, and the hemisphere shall be smoothly blended into the pin cylinder without shoulders or tapering. The end of the pin may be flat for not more than one-quarter of the pin diameter.

FIGURE 4. Contact/retention test gauge.

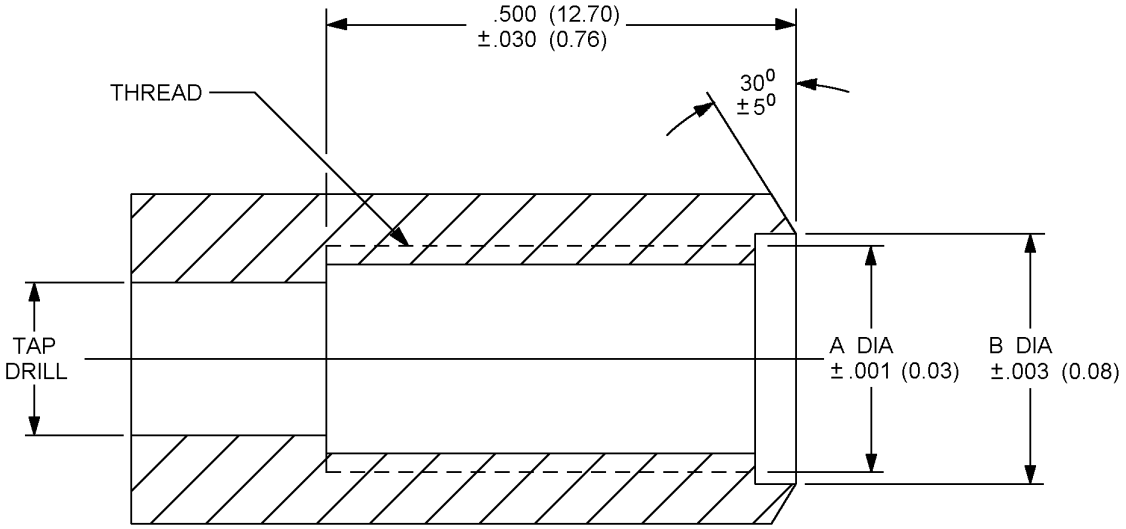

Thread	A	B
.164-32 UNF-2B	.165	.209
.190-32 UNF-2B	.191	.229

Material: Stainless steel in accordance with SAE J438, type A2, Rockwell hardened to C58-61.

FIGURE 5. Threaded torque test gauge.

Downloaded from http://www.everyspec.com

CONCLUDING MATERIAL

Custodians:
Army - CR
Navy - EC
Air Force - 11
DLA - CC

Review activities:
Army - AT, AV, CR4, MI
Navy - AS, CG, MC, OS
Air Force – 19, 99

Preparing activity:
DLA - CC

(Project 5935-4344)

Downloaded from http://www.everyspec.com

STANDARDIZATION DOCUMENT IMPROVEMENT PROPOSAL

INSTRUCTIONS

1. The preparing activity must complete blocks 1, 2, 3, and 8. In block 1, both the document number and revision letter should be given.

2. The submitter of this form must complete blocks 4, 5, 6, and 7, and send to preparing activity.

3. The preparing activity must provide a reply within 30 days from receipt of the form.

NOTE: This form may not be used to request copies of documents, nor to request waivers, or clarification of requirements on current contracts. Comments submitted on this form do not constitute or imply authorization to waive any portion of the referenced document(s) or to amend contractual requirements.

I RECOMMEND A CHANGE:	1. DOCUMENT NUMBER	2. DOCUMENT DATE *(YYYYMMDD)*
	MIL-DTL-12883F	20030218

3. DOCUMENT TITLE

SOCKETS AND ACCESSORIES FOR PLUG-IN ELECTRONIC COMPONENTS, GENERAL SPECIFIC

4. NATURE OF CHANGE *(Identify paragraph number and include proposed rewrite, if possible. Attach extra sheets as needed.)*

5. REASON FOR RECOMMENDATION

6. SUBMITTER

a. NAME *(Last, First, Middle Initial)*	b. ORGANIZATION	
c. ADDRESS *(Include ZIP Code)*	d. TELEPHONE *(Include Area Code)* (1) Commercial (2) DSN *(If applicable)*	**7. DATE SUBMITTED** *(YYYYMMDD)*

8. PREPARING ACTIVITY

a. NAME	b. TELEPHONE *(Include Area Code)*
Defense Supply Center Columbus	(1) Commercial 614-692-0573 (2) DSN 986-0573
c. ADDRESS *(Include ZIP Code)* Post Office Box 3990 (VAI) Columbus, OH 43216-5000	**IF YOU DO NOT RECEIVE A REPLY WITHIN 45 DAYS, CONTACT:** Defense Standardization Program Office (DLSC-LM) 8725 John J. Kingman Road, Suite 2533 Fort Belvoir, Virginia 22060-6221 Telephone (703) 767-6888 DSN 427-6888

Reset