Downloaded from http://www.everyspec.com

INCH-POUND

MIL-DTL-12606F
1 October 2018
SUPERSEDING
MIL-DTL-12606E
w/AMENDMENT 3
7 June 2017

DETAIL SPECIFICATION

LOUDSPEAKER, PERMANENT MAGNET (UNENCASED, 3-INCH AND 4-INCH DIAMETER CONE, 2-WATT; FUNGUS-, AND IMMERSION-RESISTANT), TYPE LS-445/U, M12606-01, AND M12606-02

Inactive for new design after November 28, 2006.

This specification is approved for use by all
Departments and Agencies of the Department of Defense.

1. SCOPE

1.1 Scope. This specification covers type LS-445/U, M12606-01 and M12606-02, unencased, permanent magnet loudspeakers with a 2-watt normal (4-watt peak) input. These loudspeakers are fungus-, and immersion-resistant, and have a voice coil impedance of 8 ± 1 ohms. The cone and spider are made of polyamide-based phenolic material (see 6.1).

2. APPLICABLE DOCUMENTS

2.1 General. The documents listed in this section are specified in sections 3 and 4 of this specification. This section does not include documents cited in other sections of this specification or recommended for additional information or as examples. While every effort has been made to ensure the completeness of this list, document users are cautioned that they must meet all specified requirements documents cited in sections 3 and 4 of this specification, whether or not they are listed.

2.2 Government documents.

2.2.1 Specifications, standards, and handbooks. The following specifications, standards, and handbooks form a part of this document to the extent specified herein. Unless otherwise specified, the issues of these documents are those cited in the solicitation or contract.

FEDERAL SPECIFICATION

FF-S-92 - Screw, Machine Slotted, Cross-Recessed or Hexagon Head

Since Navy-EC is the Navy custodian for this document, all Navy review activities should forward their comments directly to DLA Land and Maritime. Comments, suggestions, or questions on this document should be addressed to: DLA-CC, DLA Land and Maritime, ATTN: VAI, P.O. Box 3990, Columbus, Ohio 43218-3990 or emailed to sound@dscc.dla.mil. Since contact information can change, you may want to verify the currency of this address information using the ASSIST Online database at https://assist.dla.mil.

AMSC N/A

FSC 5965

Downloaded from http://www.everyspec.com

FEDERAL STANDARDS

FED-STD-H28	-	Screw-Thread Standards for Federal Services

DEPARTMENT OF DEFENSE SPECIFICATIONS

MIL-T-152	-	Treatment, Moisture and Fungus-Resistant, of Communications, Electronic, and Associated Electrical Equipment
MIL-DTL-901	-	Shock Tests, H.I. (High-Impact); Shipboard Machinery, Equipment, and Systems, Requirements For
MIL-DTL-5541	-	Chemical Conversion Coatings on Aluminum and Aluminum Alloys
MIL-DTL-14072	-	Finishes for Ground Based Electronic Equipment

DEPARTMENT OF DEFENSE STANDARDS

MIL-STD-202	-	Test Method Standard, for Electronic and Electrical Component Parts
MIL-STD-202-106	-	Test Method Standard Method 106, Moisture resistance
MIL-STD-202-301	-	Test Method Standard Method 301, Dielectric withstanding voltage
MIL-STD-1285	-	Marking of Electrical and Electronic Parts

(Copies of these documents are available online at http://quicksearch.dla.mil/)

2.3 Non-government publications. The following documents form a part of this document to the extent specified herein. Unless otherwise specified, these issues of the documents are those cited in the solicitation or contract.

ASTM INTERNATIONAL

ASTM B85/B85M	-	Standard Specification for Aluminum-Alloy Die Castings
ASTM B152/B152M	-	Standard Specification for Copper Sheet, Strip, Plate, and Rolled Bar
ASTM D709	-	Standard Specification for Laminated Thermosetting Materials

(Copies of these documents are available online at http://www.astm.org.)

INTERNATIONAL ORGANIZATION FOR STANDARDIZATION (ISO)

ISO 10012	-	Measurement Management Systems - Requirements for Measurement Processes and Measuring Equipment
ISO 17025	-	General Requirements for the Competence of Testing and Calibration Laboratories

(Copies of these documents are available online at http://www.iso.ch.)

Downloaded from http://www.everyspec.com

IPC - ASSOCIATION CONNECTING ELECTRONICS INDUSTRIES

J-STD-004	-	Requirements for Soldering Fluxes
J-STD-005	-	Requirements for Soldering Pastes-Replaces QQ-S-571
J-STD-006	-	Requirements for Electronic Grade Solder Alloys and Fluxed and Non-Fluxed Solid Solders for Electronic Soldering Applications

(Copies of these documents are available online at http://www.ipc.org.)

NCSL INTERNATIONAL

NCSL Z540.3	-	Requirements for the Calibration of Measuring and Test Equipment

(Copies of these documents are available online at http://www.ncsli.org.)

NATIONAL ELECTRICAL MANUFACTURERS ASSOCIATION (NEMA)

NEMA MW 1000	-	Magnet Wire

(Copies of these documents are available online at http://www.nema.org.)

SOCIETY OF AUTOMOTIVE ENGINEERS, INC.

SAE AMS-STD-595/24084	-	Colors Used in Government Procurement, semi-gloss green

(Copies of these documents are available online at http://standards.sae.org)

2.4 Order of precedence. Unless otherwise noted herein or in the contract, in the event of a conflict between the text of this document and the references cited herein (except for related specification sheets), the text of this document takes precedence. Nothing in this document, however, supersedes applicable laws and regulations unless a specific exemption has been obtained.

3. REQUIREMENTS

3.1 Qualification. Loudspeakers furnished under this specification shall be products that are authorized by the qualifying activity for listing on the applicable qualified products list before contract award (see 4.5 and 6.3).

3.2 Materials. Materials shall be as specified herein. However, when a definite material is not specified, a material shall be used, which will enable the loudspeaker to meet the performance requirements of this specification. Acceptance or approval of any constituent material shall not be construed as a guaranty of the acceptance of the finished product.

3.2.1 Metals.

3.2.1.1 Aluminum. Aluminum shall be UNS number A04130, as specified in ASTM B85/B85M.

3.2.1.2 Copper. Copper shall be as specified in ASTM B152/B152M .

Downloaded from http://www.everyspec.com

3.2.1.3 Dissimilar metals. There shall be no inter-metallic contact of dissimilar metals. Where it is necessary that any combination of dissimilar metals be assembled, an interposing material shall be used, which is compatible to each metal. Compatibility of inter-metallic contacting surfaces shall be as specified in MIL-DTL-14072.

3.2.2 Solder. Solder shall be any composition as specified in J-STD-004, J-STD-005, and J-STD-006 as long as the requirements of 3.2.2.1 are met.

3.2.2.1 Pure tin (see 6.9). The use of pure tin, as an underplate or final finish, is prohibited both internally and externally. Tin content of loudspeaker components and solder shall not exceed 97 percent, by mass. Tin shall be alloyed with a minimum of 3 percent lead, by mass.

3.2.3 Wire. Magnet wire shall be as specified in NEMA MW 1000, Part 2. Any part number from this specification may be used, but the part number must meet the following requirements: Insulation Material – any polymer specified, Thermal Class – 105 or greater, Round wire.

3.2.4 Screws. Screws shall be as specified in FF-S-92.

3.2.5 Recycled, recovered, or environmentally preferable materials. Recycled, recovered, or environmentally preferable materials should be used to the maximum extent possible, provided that the material meets or exceeds the operational and maintenance requirements, and promotes economically advantageous life cycle costs.

3.3 Design and construction. The loudspeaker shall be of the design, construction, and physical dimensions specified herein (see figure 1, figure 2, and figure 3).

3.3.1 Threaded parts. All threaded parts shall be, as specified in FED-STD-H28. Where practical, all threads shall conform to the coarse-thread series. The fine-thread series shall be used only for applications that might show a definite advantage through their use. Where a special diameter-pitch combination is required, the thread shall be of American National Form and of any pitch between 16 and 36, which is used in the fine-thread series.

3.3.2 Finishes. Finishes shall be, as specified in MIL-DTL-14072, type I (exposed). Final color shall conform to SAE AMS-STD-595/24084 (semi-gloss green). Aluminum alloy baskets shall have a chemical conversion coating, as specified in MIL-DTL-5541 with type I (exposed) anodize, as specified in MIL-DTL-14072.

3.3.3 Adhesives. Water soluble adhesives shall not be used.

3.3.4 Terminal board. The terminal board for the voice coil wire lead terminations shall be made of laminated plastic sheet, as specified in ASTM D709, and shall provide two solder-type terminals to permit the soldering to two No. 24 AWG wires on each terminal. Terminals shall be copper, copper-based alloy (e.g. CuBe, Brass or Bronze) and shall be solder-coated. Any terminal material must have sufficient conductivity to fulfill all other requirements of this specification.

3.3.4.1 Terminal board marking. The terminal board shall have a distinctive red mark adjacent to the positive terminal, which shall be visible with the terminal board mounted in place (see figure 1).

3.3.5 Moisture-resistant and fungus-resistant treatment. Parts that are not fungus resistant shall be treated in accordance with MIL-T-152.

Downloaded from http://www.everyspec.com

3.4 Performance requirements.

3.4.1 Voice coil polarity. When tested as specified in 4.7.2, the voice coil shall move in a direction away from the magnet.

3.4.2 Voice coil impedance. When tested as specified in 4.7.3, the voice coil impedance shall be 8 ± 1 ohms.

3.4.3 Dielectric withstanding voltage. When tested as specified in 4.7.4, there shall be no arcing or breakdown of the voice coil insulation.

3.4.4 Acoustic quality. When loudspeakers are tested as specified in 4.7.5, there shall be no buzzes, rattles, or other spurious sounds that would impair the quality of reproduced audio signal in the output.

3.4.5 Frequency response.

3.4.5.1 LS-445/U and M12606-02. When tested as specified in 4.7.6.1, the frequency response between 750 to 1,250 Hz shall be not less than 95 decibels (dB) relative to 20 µPa (micro-Pascal). The response levels between 300 to 7,000 Hz shall be within the limits shown on figure 4, except that sharp peaks and dips may extend beyond these limits provided that the width (duration) of the extension is not greater than 0.1 (1/10) octave at the limit.

3.4.5.2 M12606-01. When tested as specified in 4.7.6.2, the frequency response between 750 to 1,250 Hz shall not be less than 93 decibels (dB) relative to 20 µPa. The response levels between 400 to 6,000 Hz shall be within the limits shown on figure 5, except that sharp peaks and dips may extend beyond these limits provided that the width (duration) of the extension is not greater than 0.1 (1/10) octave at the limit.

Downloaded from http://www.everyspec.com

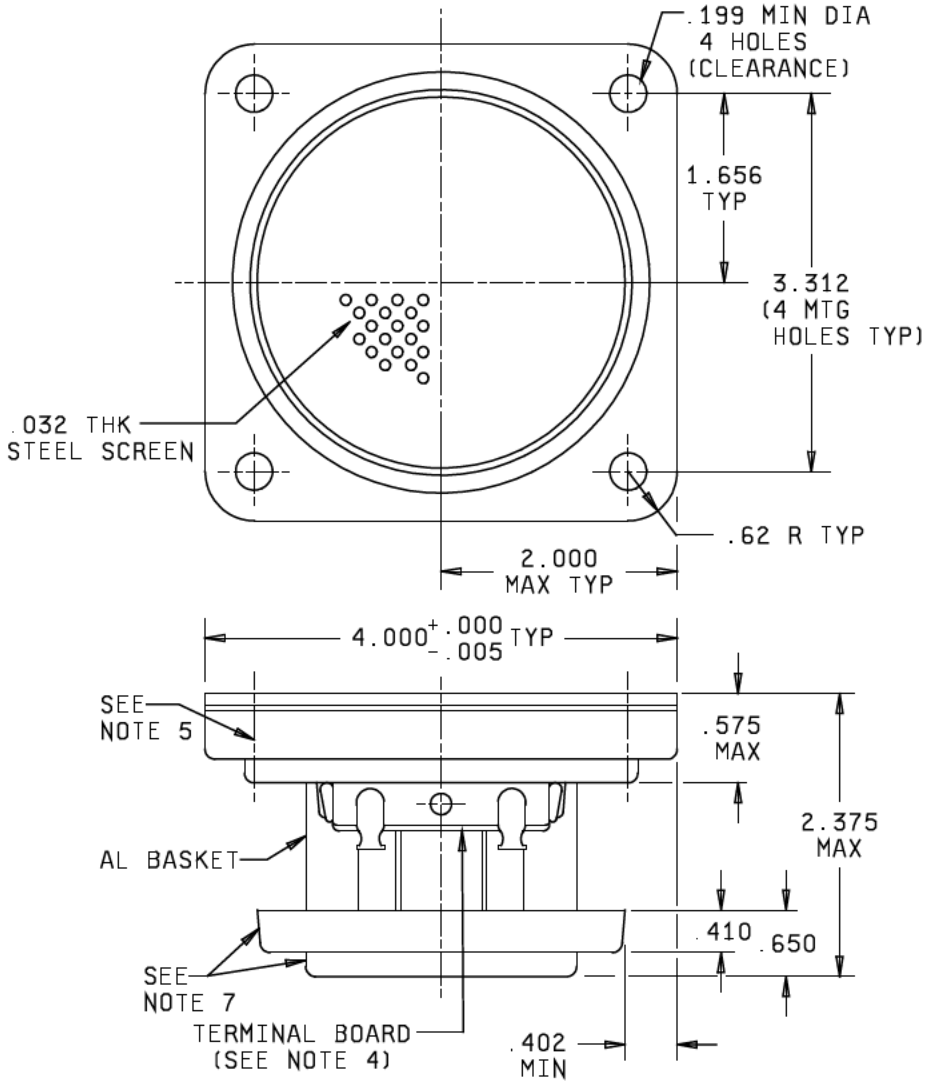

Inches	mm
.005	.13
.032	.81
.199	5.05
.402	10.21
.410	10.41
.575	14.60
.62	15.70
.650	16.51
1.656	42.06
2.000	50.80
2.375	60.32
3.312	84.12
4.000	101.60

NOTES:

1. Dimensions are in inches.
2. Metric equivalents are given for general information only and are based upon 1 inch = 25.4 mm.
3. Unless otherwise specified, tolerances are xx ± .02 (.5 mm) and xxx ± .005 (.13 mm).
4. Mark terminal board with a red mark near positive terminal (see 3.3.4.1).
5. Four mounting holes, with No. 10-24 UNC-2B threads CSK 90 x .03 deep, both sides of basket only.
6. "TYP" is defined in 6.6.
7. Configuration is optional.

FIGURE 1. Type LS-445/U loudspeaker (see 6.4).

Downloaded from http://www.everyspec.com

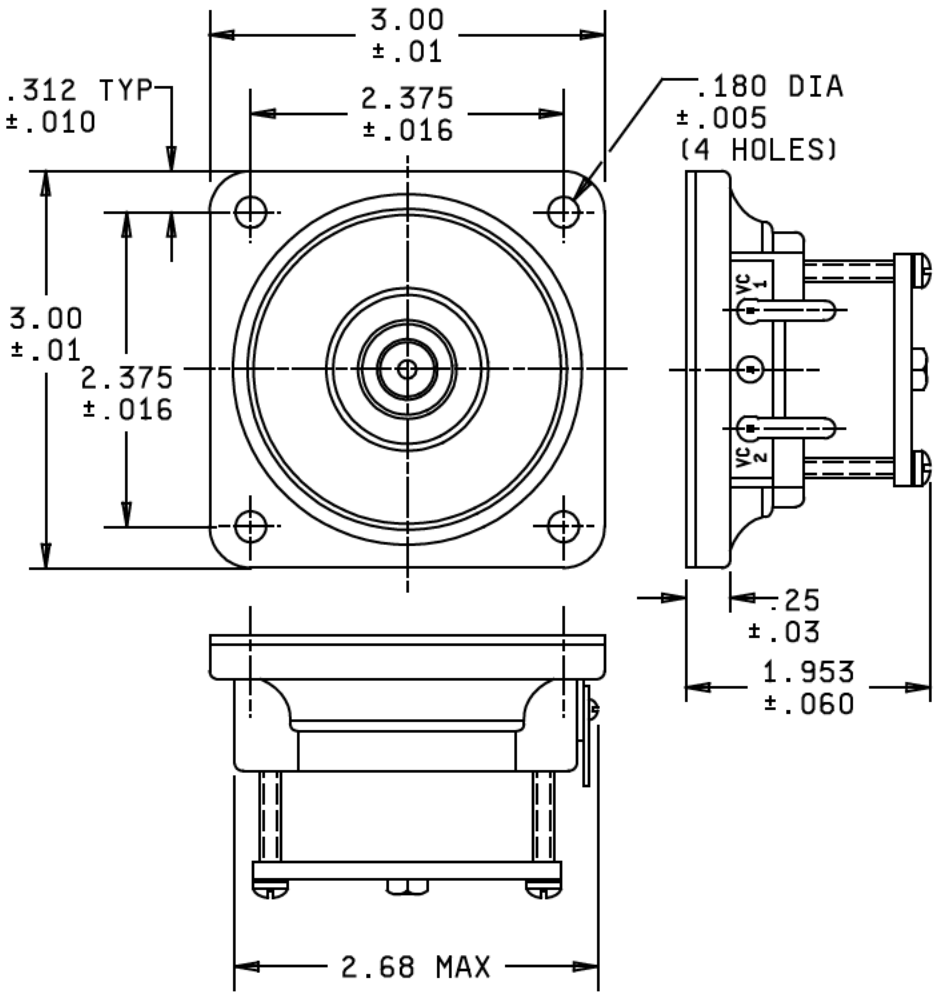

Inches	mm	Inches	mm
.005	.13	.25	6.4
.010	.25	.312	7.92
.016	.41	1.953	49.61
.03	.8	2.375	60.32
.060	1.52	2.68	68.1
.180	4.57	3.00	76.2

NOTES:

1. Dimensions are in inches.
2. Metric equivalents are given for general information only and are based upon 1 inch = 25.4 mm.
3. Unless otherwise specified, tolerances are xx ± .02 (.5 mm) and xxx ± .005 (.13 mm).
4. Mark terminal board with a red mark near positive terminal (see 3.3.4.1).
5. "TYP" is defined in 6.6.
6. Configuration is optional.

FIGURE 2. M12606-01 (see 6.4).

Downloaded from http://www.everyspec.com

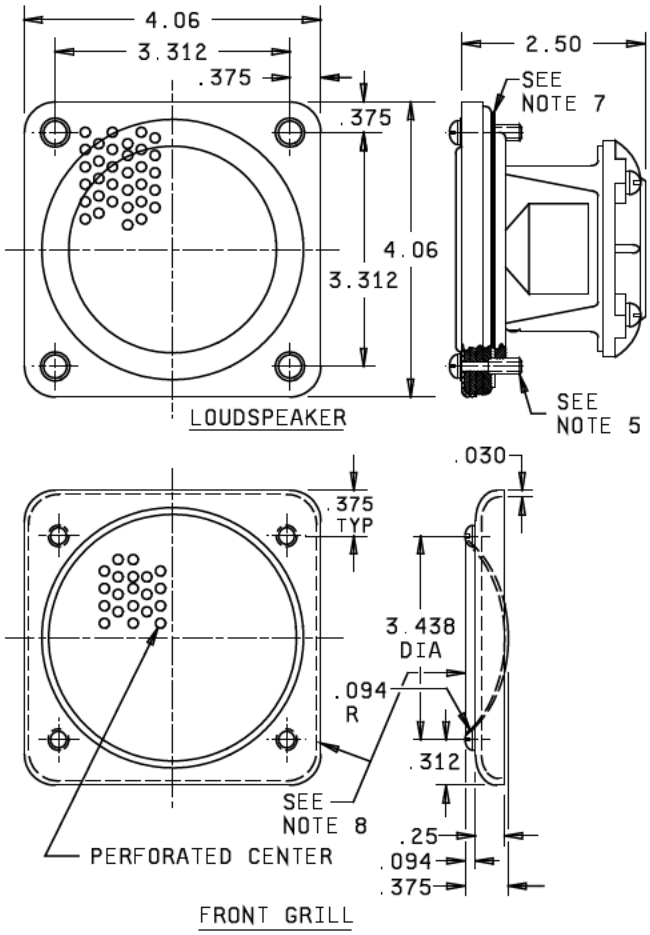

Inches	mm
0.030	.76
0.094	2.39
0.190	4.83
0.20	5.1
0.312	7.92
0.375	9.52
0.75	19.0
2.50	63.5
3.312	84.12
3.438	87.33
4.06	103.1

NOTES:

1. Dimensions are in inches.
2. Metric equivalents are given for general information only and are based upon 1 inch = 25.4 mm.
3. Unless otherwise specified, tolerances are xx ± .02 (.51mm) and xxx ± .005 (.13 mm).
4. Mark terminal board with a red mark near positive terminal (see 3.3.4.1).
5. Four mounting holes, with No. 10-24 UNC-2B threads CSK 90 x .03 deep, both sides of basket only.
6. "TYP" is defined in 6.6.
7. Gasket shall be made of Neoprene, durometer –50, color –black.
8. Grill shall be made of steel, cold rolled sheet, condition 4, regular bright finish.
9. Configuration is optional.

FIGURE 3. M12606-02 (see 6.4).

Downloaded from http://www.everyspec.com

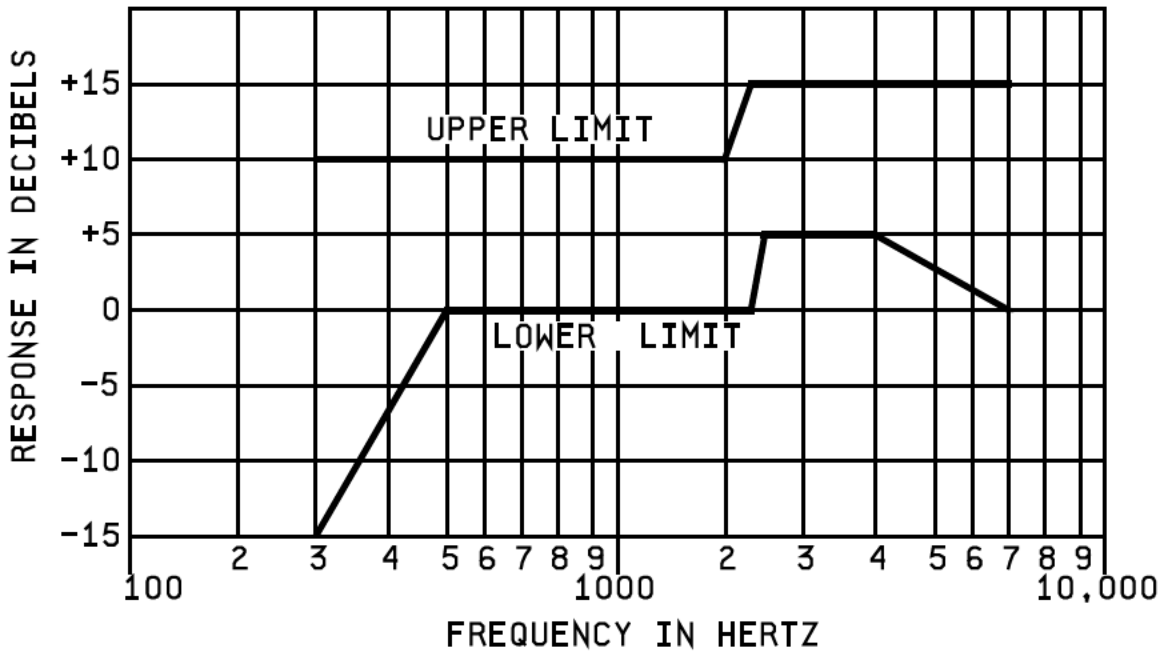

Frequency Points	300 Hz	500 Hz	2,000 Hz	2,250 Hz	4,000 Hz	7,000 Hz
Upper Limits (dB)	+10.0	+10.0	+10.0	+15.0	+15.0	+15.0
Lower Limits (dB)	-15.0	0.0	0.0	0.0	+5.0	0.0

FIGURE 4. Frequency response limits for LS-445/U and M12606-02 (see 4.7.6.1).

Downloaded from http://www.everyspec.com

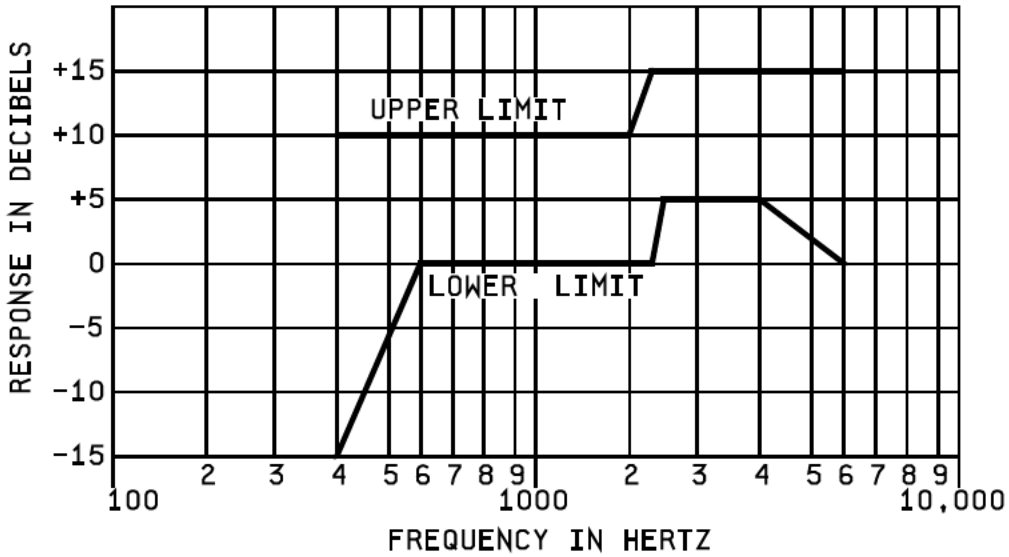

Frequency Points	400 Hz	600 Hz	2,000 Hz	2,250 Hz	4,000 Hz	6,000 Hz
Upper Limits (dB)	+10.0	+10.0	+10.0	+15.0	+15.0	+15.0
Lower Limits (dB)	-15.0	0.0	0.0	0.0	+5.0	0.0

FIGURE 5. Frequency response limits for M12606-01 (see 4.7.6.2).

3.4.6 Harmonic distortion. When tested as specified in 4.7.7, the total harmonic distortion in the acoustic output of the loudspeaker shall not exceed 5 percent.

3.4.7 Immersion resistance. When tested as specified in 4.7.8, there shall be no buzzing, rattling, or other spurious sounds in the acoustic output of the loudspeaker; the frequency response and harmonic distortion shall be as specified in 3.4.5 and 3.4.6 respectively; and there shall be no damage to the loudspeaker.

3.4.8 Endurance. When tested as specified in 4.7.9, the frequency response shall be as specified in 3.4.5, and there shall be no damage to the loudspeaker.

3.4.9 Cold resistance. When tested as specified in 4.7.10, there shall be no buzzing, rattling, or other spurious sounds in the acoustic output of the loudspeaker during the test. The frequency response and harmonic distortion shall be as specified in 3.4.5 and 3.4.6 respectively, following the test; and there shall be no damage to the loudspeaker.

Downloaded from http://www.everyspec.com

3.4.10 Heat resistance. When tested as specified in 4.7.11, there shall be no buzzing, rattling, or other spurious sounds in the acoustic output of the loudspeaker during the test. The frequency response and harmonic distortion shall be as specified in 3.4.5 and 3.4.6 respectively, following the test; and there shall be no damage to the loudspeaker.

3.4.11 Moisture resistance. When tested as specified in 4.7.12, the frequency response and harmonic distortion shall be as specified in 3.4.5 and 3.4.6, respectively, and there shall be no loosening and deformation of parts or other damage to the loudspeaker.

3.4.12 Bounce. When tested as specified in 4.7.13, the frequency response and harmonic distortion shall be as specified in 3.4.5 and 3.4.6, respectively, and there shall be no loosening or deformation of parts or other damage to the loudspeaker.

3.4.13 Shock. When tested as specified in 4.7.14, the frequency response and harmonic distortion shall be as specified in 3.4.5 and 3.4.6, respectively, and there shall be no loosening or deformation of parts or other damage to the loudspeaker.

3.5 Marking. The loudspeaker shall be permanently and legibly marked, as specified in MIL-STD-1285, with the type number (see 1.1), the manufacturer's name, CAGE Code and symbol (if applicable). Marking shall remain legible after all tests.

3.6 Workmanship. The loudspeaker shall be processed in such a manner as to be uniform in quality and shall be free from defects that will affect life, serviceability, or appearance.

4. VERIFICATION

4.1 Classification of inspections. The inspection requirements specified herein are classified as follows:

a. Materials inspection (see 4.3).
b. Qualification inspection (see 4.5).
c. Verification of qualification (see 4.5.5).
d. Conformance inspection (see 4.6).

4.1.1 Accuracy of measuring and test equipment. The establishment and maintenance of a calibration system to control the accuracy of the measuring and test equipment shall be as specified in ISO 10012, ISO 17025, and NCSL Z540.3.

4.2 Inspection conditions. Unless otherwise specified, all inspections shall be performed in accordance with the test conditions specified in the "General Requirements" of MIL-STD-202.

4.3 Material inspection. Materials inspection shall consist of certification supported by verifying data that the materials listed in table I, used in fabricating the loudspeaker, are as specified in the applicable referenced specifications or requirements prior to such fabrication.

Downloaded from http://www.everyspec.com

TABLE I. Materials inspection.

Material	Requirement paragraph	Applicable specification
Aluminum	3.2.1.1	ASTM B85/B85M
Copper	3.2.1.2	ASTM B152/B152M
Solder	3.2.2	J-STD-004, J-STD-005, J-STD-006
Wire	3.2.3	NEMA MW 1000
Screws	3.2.4	FF-S-92
Plastic	3.3.4	ASTM D709

4.4 Inspection conditions and preconditioning.

4.4.1 Conditions. Unless otherwise specified herein, all inspections shall be performed with the test conditions, as specified in the "GENERAL REQUIREMENTS" of MIL-STD-202. All acoustical testing, except operational testing, shall be made in an anechoic chamber, which is the equivalent to the free field acoustic environment. Free-field conditions are those that approach acoustically those of free space. An anechoic room should be considered satisfactory, if the sound pressure varies inversely as the distance, within ± 1 dB, over the measuring frequency range, under the following conditions: the sound source is effectively a point source (that is, emits spherical waves) and is located at the position or positions of the reference point[1/] of the device under test; the microphone is located at the position or positions it will occupy during the test; and the distance referred to is the distance between the reference point[1/] of the effective point source and the microphone.

4.4.2 Bounce preconditioning. The loudspeaker shall be placed in any convenient position on the table of a package tester as made by the L. A. B. Equipment, Inc. (CAGE 1MNL5), Phone (630) 595-4288, Itasca, IL. 60143, Model 100V-Series.® transportation simulator (or equal). The package tester, shafts in phase, shall have a speed so that it is just possible to insert a 0.031 (1/32) inch thick strip of material under one corner or edge of the loudspeaker to a distance of 3 inches as the loudspeaker bounces. The loudspeaker shall be subjected to 1 minute of this bounce preconditioning. After the bounce preconditioning, the loudspeaker shall not be repaired, adjusted, cleaned, or otherwise changed prior to the qualification or conformance inspection (see 4.7.13).

4.5 Qualification inspection. Qualification inspection shall be performed at a laboratory acceptable to the Government (see 6.3) on sample units produced with equipment and procedures normally used in production.

4.5.1 Sample size. Six (6) loudspeakers shall be subjected to qualification inspection.

4.5.2 Inspection routine. The sample shall be subjected to the inspections specified in table II, in the order shown. All sample units shall be subjected to the inspections of group I. The sample shall then be divided equally into two groups of 3 (three) units each. One group shall be subjected to the group II inspections, and the other group shall be subjected to group III inspections.

1/ For single direct-radiator drivers having plane diaphragms, the reference point should be the center of the diaphragm; and for those having conical diaphragms, the reference point should be the center of a plane passing through the outer edge of the cone.

Downloaded from http://www.everyspec.com

TABLE II. Qualification inspection.

Inspection	Requirement paragraph	Method paragraph
Group I		
Visual and mechanical examination	3.2, 3.3, 3.5, 3.6	4.7.1
Voice coil polarity	3.4.1	4.7.2
Voice coil impedance	3.4.2	4.7.3
Dielectric withstanding voltage	3.4.3	4.7.4
Acoustic quality	3.4.4	4.7.5
Frequency response	3.4.5	4.7.6
Harmonic distortion	3.4.6	4.7.7
Group II		
Immersion resistance	3.4.7	4.7.8
Endurance	3.4.8	4.7.9
Group III		
Cold resistance	3.4.9	4.7.10
Heat resistance	3.4.10	4.7.11
Moisture resistance	3.4.11	4.7.12
Bounce	3.4.12	4.7.13
Shock	3.4.13	4.7.14

4.5.3 Failure. One or more failures shall be cause for refusal to grant qualification approval.

4.5.4 Disposition of sample units. Sample units, which have been subjected to qualification inspection, shall not be delivered on the contract or order.

Downloaded from http://www.everyspec.com

4.5.5 Retention of qualification. To retain qualification, the qualified manufacturer shall periodically forward reports to the Qualifying Activity (see 6.3) as follows:

a. At 24 month intervals, unless otherwise specified by the qualifying activity, the qualified manufacturer shall forward a report with a summary of the results of groups A and B testing. The results of tests for all reworked lots shall be identified and accounted for.

b. At 36 month intervals, unless otherwise specified by the qualifying activity, the qualified manufacturer shall submit requalification, group C test reports, including the number and mode of failures. The summary shall include results of all qualification verification inspection testing performed during that period.

Reports shall include certification that the qualified source continues to produce qualified product under the same conditions as originally qualified (i.e., same processes, materials, design, construction, etc., including manufacturing locations), unless such changes have been authorized by the Qualifying Activity.

Note: The qualified source shall immediately notify the Qualifying Activity at any time during the reporting period when inspection data indicates failure of the qualified product to meet the requirements of the specification. If the summary of test results indicates nonconformance with the specification requirements, and corrective action acceptable to the Qualifying Activity has not been taken, then action may be taken to remove failing product from the QPL. In addition, failure to submit the report within thirty days after the end of each reporting period may result in loss of qualification for that product. In the event that no production occurred during the reporting period, the qualified manufacturer shall submit a report certifying that the company still has the capability and facilities required to produce the qualified product. If there has been no production during two consecutive reporting periods, the Qualifying Activity, at their discretion, may require the manufacturer submit a representative product of each type, class, etc., to retention testing in accordance with qualification inspection requirements.

4.5.6 Extension of qualification. Qualification for LS-445/U may be extended to cover qualification of M12606-02.

4.6 Conformance inspection.

4.6.1 Inspection of product for delivery. Inspection of product for delivery shall consist of groups A and B inspection.

4.6.1.1 Inspection lot. An inspection lot shall consist of all loudspeakers produced under essentially the same conditions and offered for inspection at one time. Any of the three styles of loudspeakers (LS-445/U, M12606/01, or M12606/02) can be combined in an inspection lot.

4.6.1.2 Group A inspection. Group A inspection shall consist of the inspections specified in table III, in the order shown.

4.6.1.2.1 Sampling plan. A sample of parts shall be randomly selected in accordance with table IV. Each inspection sample shall include a proportional quantity from each of the different styles (LS-445/U, M12606/01, or M12606/02) produced and to be tested. If one or more defects are found, the lot shall be rescreened and defects removed.

4.6.1.2.2 Rejected lots. If an inspection lot is rejected, the contractor may rework it to correct the defects, or screen out the defective units, and resubmit for reinspection. If one or more defects are found in the second sample, the lot shall be rejected and shall not be supplied to this specification.

Downloaded from http://www.everyspec.com

TABLE III. Group A and group B inspections.

Inspection	Requirement paragraph	Method paragraph
Group A		
Visual and mechanical examination	3.2, 3.3, 3.5, 3.6	4.7.1
Voice coil polarity	3.4.1	4.7.2
Voice coil impedance	3.4.2	4.7.3
Dielectric withstanding voltage	3.4.3	4.7.4
Acoustic quality	3.4.4	4.7.5
Group B		
Frequency response	3.4.5	4.7.6
Harmonic distortion	3.4.6	4.7.7

4.6.1.3 Group B inspection. Group B inspection shall consist of the inspection specified in table III, and shall be made on sample units, which have been subjected to and have passed group A inspection.

4.6.1.3.1 Sampling plan. A sample of parts shall be randomly selected in accordance with table IV. Each inspection sample shall include a proportional quantity from each of the different styles (LS-445/U, M12606/01, or M12606/02) produced and to be tested. If one or more defects are found, the lot shall be rescreened and defects removed.

TABLE IV. Group A and group B sampling plans.

Lot size			Sample size 1/	
			Group A	Group B
2	to	8	Entire lot	3
9	to	15	9	3
16	to	25	13	3
26	to	50	13	5
51	to	90	13	6
91	to	150	13	7
151	to	280	20	10
281	to	500	29	11
501	to	1,200	34	15
1,201	to	3,200	42	18
3,201	to	10,000	50	22
10,001	to	35,000	60	29

1/ In all cases, the sample size shall not exceed the lot size.

4.6.1.3.2 Rejected lots. If an inspection lot is rejected, the contractor may rework it to correct the defects, or screen out the defective units, and resubmit for re-inspection. If one or more defects are found in the second sample, the lot shall be rejected and shall not be supplied to this specification.

4.6.1.3.3 Disposition of sample units. Sample units, which have passed all the group B inspection, may be delivered on the contract or order, if the lot is accepted and the sample units are still within specified electrical tolerances.

Downloaded from http://www.everyspec.com

4.6.2 Periodic inspection. Periodic inspection shall consist of group C. Except where the results of these inspections show noncompliance with the applicable requirements (see 4.6.2.1.4), delivery of products which have passed groups A and B shall not be delayed pending the results of the periodic inspection.

4.6.2.1 Group C inspection. Group C inspection shall consist of the inspections specified in table V, in the order shown. Group C inspection shall be made on sample units selected from inspection lots, which have passed the groups A and B inspections.

4.6.2.1.1 Sampling plan. Group C inspection shall be performed once every 36 months on 6 sample units selected, without regard to their quality, from units produced during the preceding 36 month period. Each inspection sample shall include approximately the same number of loudspeakers from each of the different styles (LS-445/U, M12606/01, or M12606/02) produced and to be tested. The sample shall be divided equally into two groups and subjected to the tests of subgroups 1 and 2 in table V.

TABLE V. Group C inspection.

Inspection	Requirement paragraph	Method paragraph
Subgroup 1 (3 sample units)		
Immersion resistance	3.4.7	4.7.8
Endurance	3.4.8	4.7.9
Subgroup 2 (3 sample units)		
Cold resistance	3.4.9	4.7.10
Heat resistance	3.4.10	4.7.11
Moisture resistance	3.4.11	4.7.12
Bounce	3.4.12	4.7.13

4.6.2.1.2 Failures. If one or more units fail to pass group C inspection, the sample shall be considered to have failed.

4.6.2.1.3 Disposition of sample units. Sample units, which have been subjected to group C inspection, shall not be delivered on the contract or order.

Downloaded from http://www.everyspec.com

4.6.2.1.4 Noncompliance. If a sample fails to pass group C inspection, the manufacturer shall immediately notify the qualifying activity of such failure and take corrective action on the materials or processes, or both as warranted, and on all units of product which can be corrected and which were manufactured under essentially the same conditions, with essentially the same materials, processes, etc, and which are considered subject to the same failure. Any corrective actions taken shall have prior approval of the qualifying activity. Acceptance and shipment of the product shall be discontinued until corrective action, acceptable to the qualifying activity, has been taken. After the corrective action has been taken, group C inspection shall be repeated on additional sample units (all inspections, or the inspection which the original sample failed, as directed by the qualifying activity). Groups A and B inspection may be reinstituted; however, final acceptance and shipment shall be withheld until acceptance of the group C inspection results by the qualifying activity. In the event of failure after re-inspection, information concerning the failure shall be immediately furnished to the qualifying activity.

4.7 Methods of inspection.

4.7.1 Visual and mechanical examination. The loudspeaker shall be examined to verify that the materials, design, construction, physical dimensions, marking, and workmanship are in accordance with the applicable requirements (see 3.2, 3.3, 3.5, and 3.6). Unless otherwise specified (see 6.2), the defects shall be identified as specified in table VI.

4.7.2 Voice coil polarity (see 3.4.1). A dc potential of from 3 to 10 volts shall be applied to the voice coil terminals, with positive polarity applied to the terminal adjacent to the red mark, and the direction of motion of the voice coil shall be observed.

4.7.3 Voice coil impedance (see 3.4.2). The loudspeaker shall be supported on the side opposite the cone. There shall be no obstruction within 3 feet of the front of the cone. Voice coil impedance shall then be determined as specified in 4.7.3.1 and 4.7.3.2 or by test equipment capable of determining the ratio of input voltage to input current at a given frequency, at the option of the manufacturer.

4.7.3.1 Direct reading method. The voice coil terminals shall be connected in series with a 10 ± 0.10 ohm resistor R across the output of a low impedance 1,000 Hz signal source (E_T) (see figure 6). A voltmeter shall be placed across R and E_T set so that E_R equals 1 ± 0.01 volt. The voltmeter shall be removed and placed across the voice coil terminals, to measure E_Z. This voltmeter reading will be the impedance divided by 10. The voltmeter reading E_Z must be multiplied by 10, to determine the actual voice coil impedance in ohms.

4.7.3.2 Resistance to substitution method. The voice coil terminals shall be connected in series with a variable resistance across the output of a low impedance 1,000 Hz signal source. The voltage drops across the voice coil and the variable resistor shall be determined with an electronic voltmeter. The value of the variable resistor shall be adjusted until the voltage drops are equal, and the resistance of the variable resistor shall than be measured with a resistance bridge or other suitable equipment. The voice coil impedance shall be considered as numerically equal to the measured value of resistance of the variable resistor.

Downloaded from http://www.everyspec.com

TABLE VI. Identification of defects for visual and mechanical examination.

Defect type	Identification	
	Major	Minor
Dimensions	Dimensions not as specified.	---
Materials and finish	Materials not as specified. Wrong or incomplete finish. Large amounts of flaking, peeling, or chipping of finish.	Scratches, cuts, abrasions, etc., causing exposure of base metal, or relatively small amount of flaking, peeling, or chipping.
Parts	Missing parts. Inoperative, improperly assembled, or defective parts, which could cause the loudspeaker to fail in service. Wrong parts.	Defective parts, which would reduce efficiency of use, but not cause failure in service. Cracks or chipped surfaces having no effect on the functioning, assembly, maintenance, or life of the loudspeaker.
Marking	Marking missing, illegible, or incorrect.	Marking dirty or smudged, but legible.
Foreign objects	Any metallic foreign object, not firmly attached 1/, which could cause a short circuit, or acoustical malfunctioning of the loudspeaker. Any nonmetallic foreign object such as insulation, dirt, or phenolic chips, which could cause acoustical malfunctioning of the loudspeaker.	Any metallic or nonmetallic foreign object, which affects appearance, but which could not cause acoustical malfunctioning of the loudspeaker.
Soldering	Improper wrap - less than 0.5 turn. Unsoldered joint-solder not applied where intended. Insufficient solder - Minimum dimension of solder bridge less than twice the diameter of the wire of less than 0.094 inch, whichever is greater. Entire area of contact between wire and terminal not joined by solder bridge, Cold solder joint - Chalky appearance, lacks metallic luster, presents rough “pile-up” appearance; movement of wire or solder upon pick application. Rosin joint - Presence of excess rosin; relative movement of wire or solder upon pick application. Insulation in terminal hole - Solder over insulation; no appearance of visible wire contour.	Improper wrap – 0.5 turn or more, but less than one turn. Excess solder - Build-up solder on joint greater than necessary for good soldering, usually resulting in obliteration of wire contour. Cold solder joint - Chalky appearance, lacks metallic luster, presents rough “pile-up” appearance; no relative action between wire and solder upon pick application.
Wiring	Broken strands - More than 20 percent; except in a 7-strand conductor, more than 2 broken strands. Insulation burned, abraded, pinched, or deteriorated between two or more conductors, resulting in a potential short circuit. Taut wire - Wire exhibits no slack and subsequent breakage may occur due to stress on terminal or part. Insulation frayed to the extent that a potential short circuit exists.	Broken strands - 20 percent or less. In a 7-strand conductor, 2 broken strands. Insulation burned, abraded, pinched, or deteriorated, with exposure of bare wire, but short circuit not possible. Taut wire - Slight stress on conductor, but no possibility of subsequent breakage.

1/ Foreign objects that cannot be dislodged by the moderate application of pressure with a pick or comparable tool shall be considered firmly attached.

Downloaded from http://www.everyspec.com

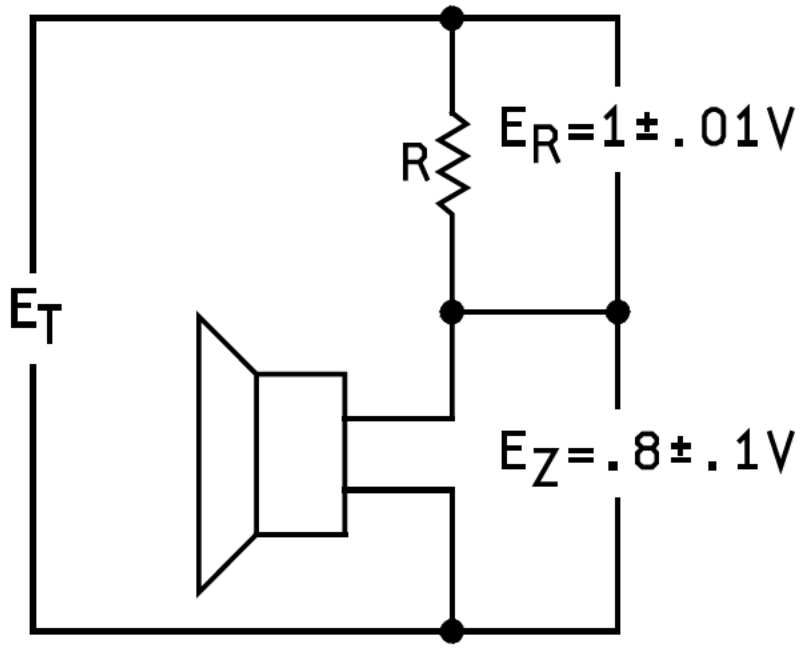

FIGURE 6. Measurement of impedance by direct reading method (see 4.7.3.1).

4.7.4 Dielectric withstanding voltage (see 3.4.3). The loudspeaker shall be tested, as specified in MIL-STD-202-301. The following details shall apply:

a. Test voltage – 400 volts.
b. Nature of potential – 60 Hz, AC.
c. Points of application – The test voltage shall be applied between one of the voice coil terminals and the loudspeaker frame; simultaneously, the voice coil shall be excited with a minimum of 2.85 volts root mean square (rms) at 300 Hz.

4.7.5 Acoustic quality (see 3.4.4). For LS-445/U and M12606-02, a constant voltage having an rms value of 4.00 ± .10 volts shall be applied to the voice coil terminals and the frequency varied continuously from 300 to 7,000 Hz and back to 300 Hz. For M12606-01, the frequency shall be varied continuously from 400 to 6,000 Hz and back to 400 Hz.

4.7.6 Frequency response.

4.7.6.1 Type LS-445/U and M12606-02 (see 3.4.5.1). The loudspeaker shall be mounted in a test cabinet (see figure 7) and placed 3 feet from a calibrated Western Electric Type 640AA (or equivalent) condenser microphone and amplifier. The microphone shall be placed on the axis of the loudspeaker. A constant voltage having a rms value of 4.00 ± .10 volts shall be applied to the voice coil terminals and the frequency varied continuously from 300 to 7,000 Hz. The acoustic output shall be recorded on a direct-writing strip graph chart using an automatic plotter or curve tracer, with a minimum writing speed of 10 inches per second and a maximum chart speed of 30 inches per minute. Or, at the option of the manufacturer, point-to-point measurements may be made, every 50 Hz from 300 to 600; every 100 Hz from 600 to 1,500 Hz; every 250 Hz from 1,500 to 2,000 Hz; every 100 Hz from 2,000 Hz to 2,500 Hz; every 250 Hz from 2,500 to 3,000 Hz; every 500 Hz from 3,000 to 7,000 Hz, with the data record and a graph drawn (see figure 4).

4.7.6.2 M12606-01 (see 3.4.5.2). The loudspeaker shall be mounted in a closed 5 x 5 x 3 inch test cabinet with suitable 2.75 inches diameter loudspeaker opening and placed 3 feet from a calibrated Western Electric Type 640AA (or equivalent) condenser microphone and amplifier. The microphone shall be placed on the axis of the loudspeaker. A constant voltage having a rms value of 4.00 ± .1 volts shall

Downloaded from http://www.everyspec.com

be applied to the voice coil terminals and the frequency varied continuously from 400 to 6,000 Hz. The acoustic output shall be recorded on a direct-writing strip graph chart using an automatic plotter or curve tracer with, a minimum writing speed of 10 inches per second and a maximum chart speed on 30 inches per minute. Or, at the option of the manufacturer, point-to-point measurements may be made every 50 Hz from 400 to 600 Hz; every 100 Hz from 600 to 1,500 Hz; every 250 Hz from 1,500 to 2,000 Hz; every 100 Hz from 2,000 to 2,500 Hz; every 250 Hz from 2,500 to 3,000 Hz; and every 500 Hz from 3,000 to 6,000 Hz, with the data recorded and a graph drawn (see figure 5).

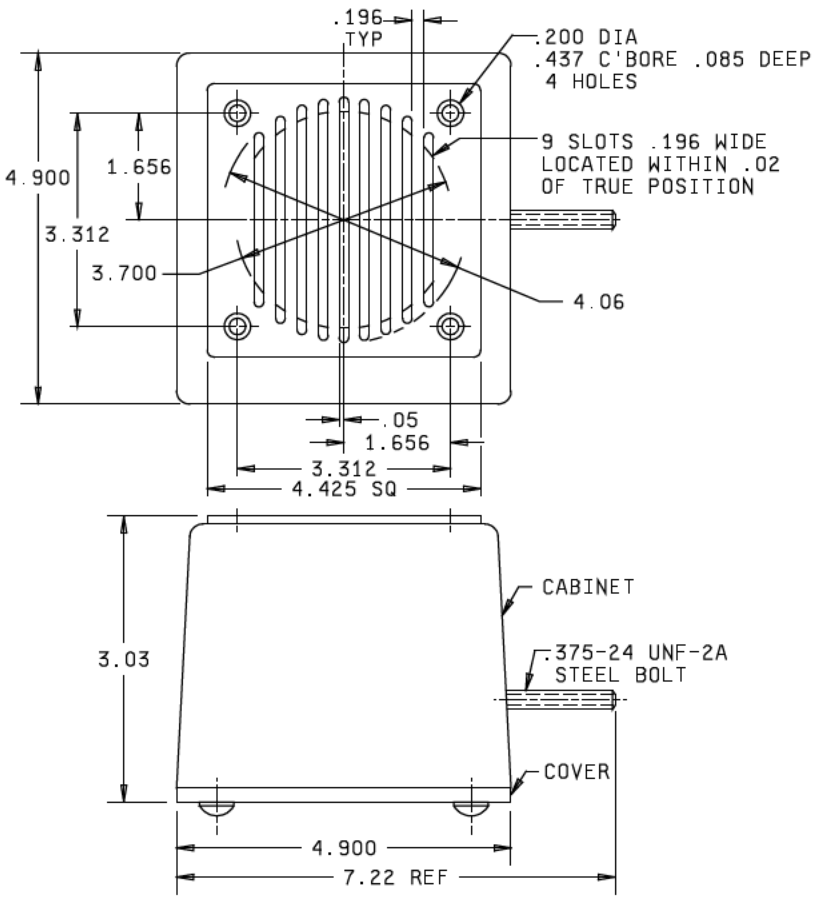

Inches	mm
.02	.51
.05	1.27
.085	2.16
.196	4.98
.200	5.08
.437	11.10
1.656	42.09
3.03	76.96
3.312	84.12
3.700	93.98
4.06	103.12
4.425	112.40
4.900	124.46
7.22	183.39

NOTES:
1. Dimensions are in inches.
2. Metric equivalents are given for general information only and are based upon 1 inch = 25.4 mm.
3. Unless otherwise specified, tolerances are .xx ± .02 (.51 mm) and .xxx ± .005 (.13 mm).

FIGURE 7. Test cabinet (see 6.5).

Downloaded from http://www.everyspec.com

4.7.7 Harmonic distortion (see 3.4.6). The loudspeaker shall be mounted in its appropriate test cabinet. A constant voltage having an rms value of 4.00 ± .10 volts at discrete frequencies of 750, 2,000 and 4,000 Hz ± 10 percent shall be applied to the voice coil terminals of loudspeaker types LS-445/U and M12606-02. A constant voltage having an rms value of 4.00 ± .10 volts at discrete frequencies of 1,000, 2,000, 4,000 Hz ± 10 percent shall be applied to the voice coil terminals of loudspeaker type M12606-01. Harmonic distortion shall be determined by one of the methods specified in 4.7.7.1 or 4.7.7.2.

4.7.7.1 Distortion analyzer method. The total harmonic distortion shall be determined by a distortion analyzer, having the following minimum characteristics:

a. Frequency range - fundamental frequency from 20 to 20,000 Hz.
b. Frequency calibration - ± 2 percent from 20 to 20,000 Hz.
c. Harmonic measurement - ± 3 percent of full scale value for distortion level as low as 0.5 percent.

4.7.7.2 Sound wave analyzer method. The harmonic distortion in the acoustic output of the loudspeaker at each frequency shall be determined by using a sound wave analyzer. The total harmonic distortion at each frequency shall be determined by the following formula:

$$\text{PERCENT DISTORTION} = 100 \times \sqrt{\frac{P_2^2 + P_3^2 + \cdots P_n^2}{P_1^2 + P_2^2 + P_3^2 + \cdots P_n^2}}$$

Where P_1 is the pressure amplitude of the fundamental and P_2, P_3, etc., are the pressure amplitudes of the harmonic components in the output.

4.7.8 Immersion resistance (see 3.4.7). The loudspeaker shall be submerged in fresh tap water to a depth of at least 3 feet and maintained at that depth for a period of 24 hours ± 1 hour. The water temperature shall be 65 – 75 degrees F. At the end of the 24-hour submersion period, the loudspeaker shall be removed from the tank, drained, wiped, and allowed to dry naturally, for 30 minutes ± 5 minutes. At the completion of the 30 minutes ± 5 minutes drying period, the loudspeaker shall be tested in accordance with 4.7.5. The loudspeaker shall be allowed to dry at room ambient conditions for 48 hours ± 1 hour, and shall then be tested in accordance with 4.7.6 and 4.7.7, respectively, and examined for evidence of damage.

4.7.9 Endurance (see 3.4.8). One frequency shall be selected from each of the following frequency ranges, and shall be of a value, which will not coincide with any major resonant frequency of the loudspeaker: A constant rms voltage of 2.85 ±.1 volts, at each of four selected discrete frequencies, shall be applied to the voice coil terminals continuously for 24 hours ± 1 hour at each selected frequency (100 hours ± 4 hours total).

250 - 400 Hz
400 - 500 Hz
1,000 - 1,500 Hz
2,000 - 3,000 Hz

After the test, the frequency response shall be determined in accordance with 4.7.6, and the loudspeaker examined for damage.

Downloaded from http://www.everyspec.com

4.7.10 Cold resistance (see 3.4.9). The loudspeaker shall be placed in a cold chamber and maintained at a temperature of – 80 degrees + 0 / - 5 degrees F for 24 hours ± 1 hour. The temperature shall then be raised to and stabilized at – 65 degrees + 0 / - 5 degrees F. A constant rms voltage of 4.00 ± .10 volts at a frequency of 300 Hz + 25 / - 0 Hz shall be applied to voice coil terminals for 5 minutes ± 1 minute at that temperature and the acoustic output checked for buzzing, rattling, or other spurious sounds. The temperature of the loudspeaker shall then be raised to room ambient conditions and the frequency response and harmonic distortion determined in accordance with 4.7.6 and 4.7.7, respectively, and the loudspeaker examined for damage.

4.7.11 Heat resistance (see 3.4.10). The loudspeaker shall be placed in a heat chamber and maintained at a temperature of +160 degrees + 5 / - 0 degrees F for a period of 24 hours ± 1 hour. A constant rms voltage 4.00 ± .10 volts at a frequency of 300 Hz + 25 / - 0 Hz shall be applied to the voice coil terminals for 5 minutes ± 1 minute, while at that temperature and the acoustic output checked for buzzing, rattling, or other spurious sounds. The temperature of the loudspeaker shall then be reduced to room ambient conditions and the frequency response and harmonic distortion determined in accordance with 4.7.6 and 4.7.7, respectively, and the loudspeaker examined for damage.

4.7.12 Moisture resistance (see 3.4.11). The loudspeaker shall be tested in accordance with MIL-STD-202-106. The following details shall apply:

a. Mounting	-	Any convenient mounting with the front face of the loudspeaker cone exposed and parallel with the vertical plane.
b. Polarizing voltage	-	Not applicable.
c. Step 7b	-	not Applicable.
d. Final measurements	-	At the completion of the tenth cycle and following a 24 hours ± 1 hour period at 25 degrees ± 5 degrees C and at 50 percent ± 5 percent relative humidity, the loudspeaker shall be tested for frequency response and harmonic distortion in accordance with 4.7.6 and 4.7.7, respectively, and examined for loose or deformed parts or other damage.

4.7.13 Bounce (see 3.4.12). The loudspeaker shall be preconditioned in accordance with 4.4.2. The loudspeaker shall be mounted on a suitable fixture, without shock mounts, and placed on the table of the package tester as made by the L. A. B. Equipment, Inc. (CAGE 1MNL5) Model 100V-Series ® transportation simulator (or equivalent). The fixture shall be constrained from horizontal motion of more than 2 inches, by suitable wooden fences. The package tester, shafts in phase, shall be operated at a speed of 285 + 3 revolutions per minute, for a total of 3 hours ± 15 minutes. The fixture shall be placed on a different side for each one-half hour of test. At the completion of the test, the loudspeaker shall be tested for frequency response and harmonic distortion in accordance with 4.7.6 and 4.7.7, respectively, and examined for loose or deformed parts or other damage.

4.7.14 Shock (see 3.4.13). A total of nine blows shall be applied to the loudspeaker employing the Lightweight Shock Machine (LWSM), in accordance with MIL-DTL-901. Three blows shall be applied parallel to each of three principle axes of the loudspeaker. The three blows for each direction are to be administered with a hammer drop height of 1 ft. (30.48 cm), 3 ft. (91.44 cm), and 5 ft (152.40 cm), respectively.

Downloaded from http://www.everyspec.com

5. PACKAGING

5.1 Packaging requirements. For acquisition purposes, the packaging requirements shall be as specified in the contract or order (see 6.2). When actual packaging of material is to be performed by DoD or in-house contractor personnel, these personnel need to contact the responsible packaging activity to ascertain packaging requirements. Packaging requirements are maintained by the Inventory Control Point's packaging activities within the Military Service or Defense Agency, or within the military service's system commands. Packaging data retrieval is available from the managing Military Department's or Defense Agency's automated packaging files, CD-ROM products, or by contacting the responsible packaging activity.

6. NOTES

(This section contains information of a general or explanatory nature that may be helpful, but is not mandatory.)

6.1 Intended use. This loudspeaker is primarily intended to be used as part of loudspeakers specified in MIL-DTL-12632. The loudspeakers covered by this specification are military unique, because they must be able to withstand water immersion for 24 hours and ambient temperatures ranging from – 80 degrees F to + 160 degrees F. Commercial loudspeakers are not designed to withstand such extreme environmental conditions and would experience catastrophic failure.

6.2 Acquisition requirements. Acquisition documents must specify the following:

a. Title, number, and date of this specification.

b. Packaging requirements (see 5.1).

c. Applicable document for identification of visual and mechanical defects, if other than table VI (see 4.7.1).

6.3 Qualification. With respect to products requiring qualification, awards will be made only for products which are, at the time of award of contract, qualified for inclusion in the applicable Qualified Products List QPL-12606, whether or not such products have actually been so listed by that date. The attention of the contractors is called to these requirements, and manufacturers are urged to arrange to have the products that they propose to offer to the Federal Government tested for qualification in order that they may be eligible to be awarded contracts or orders for the products covered by this specification. Information pertaining to qualification of products may be obtained from the DLA Land and Maritime (Attn: VQP), 3990 East Broad Street, Columbus, Ohio 43218-3990 or vqp@dla.mil. An online listing of products qualified to this specification may be found in the Qualified Products Database (QPD) at https://assist.dla.mil.

6.4 Acceptable loudspeaker design. The figure 8 shows an example of an acceptable loudspeaker design.

6.5 Test cabinet. In lieu of the test cabinet specified on figure 7, a cabinet assembly conforming to MIL-DTL-12632 may be used at the option of the manufacturer.

6.6 Typical. As defined in ASME Y14.5, the term "typical" means that the dimension or feature applies to the locations that appear to be identical in size and configuration. The tolerance, stated for a dimension labeled "typical", also applies to each identical feature.

Downloaded from http://www.everyspec.com

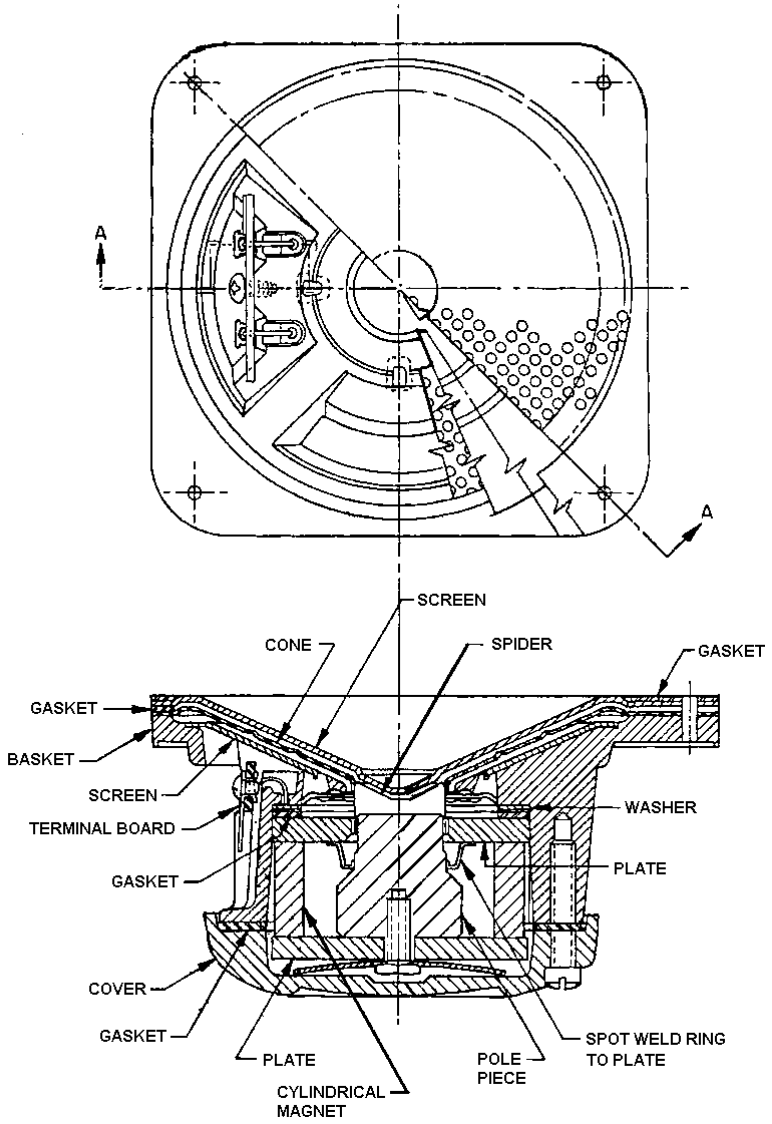

SECTION AA

NOTE: This figure is for reference only and is not intended to restrict the design.

FIGURE 8. Acceptable loudspeaker design.

Downloaded from http://www.everyspec.com

6.7 Part or Identifying Number (PIN). Except for the original configuration (LS-445/U), the military PIN consists of the letter “M” followed by the basic number of this specification and a dash number added as follows:

M12606 - 01

Basic spec number

Dash number

6.8 M12606-02. M12606-02 and LS-445/U are identical, except the M12606-02 has captive mounting screws, a rubber gasket, and a front grill, which overlaps the front of the speaker body.

6.9 Tin whisker growth (see 3.2.2.1). The use of alloys with tin content greater than 97 percent, by mass, may exhibit tin whisker growth problems after manufacture. Tin whiskers may occur anytime from a day to years after manufacture and can develop under typical operating conditions, on products that use such materials. Conformal coatings applied over top of a whisker-prone surface will not prevent the formation of tin whiskers. Alloys of 3 percent lead, by mass, have shown to inhibit the growth of tin whiskers. For additional information on this matter, refer to ASTM B545 (Standard Specification for Electrodeposited Coatings of Tin).

6.10 Subject term (key word) listing.

Analyzer, sound wave
Basket
Coil, voice
Distortion, harmonic
Piece, pole
Screen
Source, signal
Spider
Quality, acoustic

Downloaded from http://www.everyspec.com

6.11 Changes from previous issue. Marginal notations are not used in this revision to identify changes with respect to the previous issue due to the extent of the changes.

CONCLUDING MATERIAL

Custodians:
Army - CR
Navy - EC
Air Force - 85
DLA - CC

Preparing activity:
DLA - CC

(Project 5965-2018-012)

Review activities:
Army – AV
Navy - MC
Air Force - 99

NOTE: The activities listed above were interested in this document as of the date of this document. Since organizations and responsibilities can change, you should verify the currency of the information above using the ASSIST Online database at https://assist.dla.mil.