Downloaded from http://www.everyspec.com

INCH-POUND

MIL-DTL-12133/9A
19 October 2015
SUPERSEDING
MIL-W-12133/9
9 October 1987

DETAIL SPECIFICATION SHEET

WASHER, SPRING TENSION, CURVED, COPPER-BERYLLIUM

This specification is approved for use by all Departments and Agencies of the Department of Defense.

The requirements for acquiring the product described herein shall consist of this specification sheet and procurement specification MIL-DTL-12133.

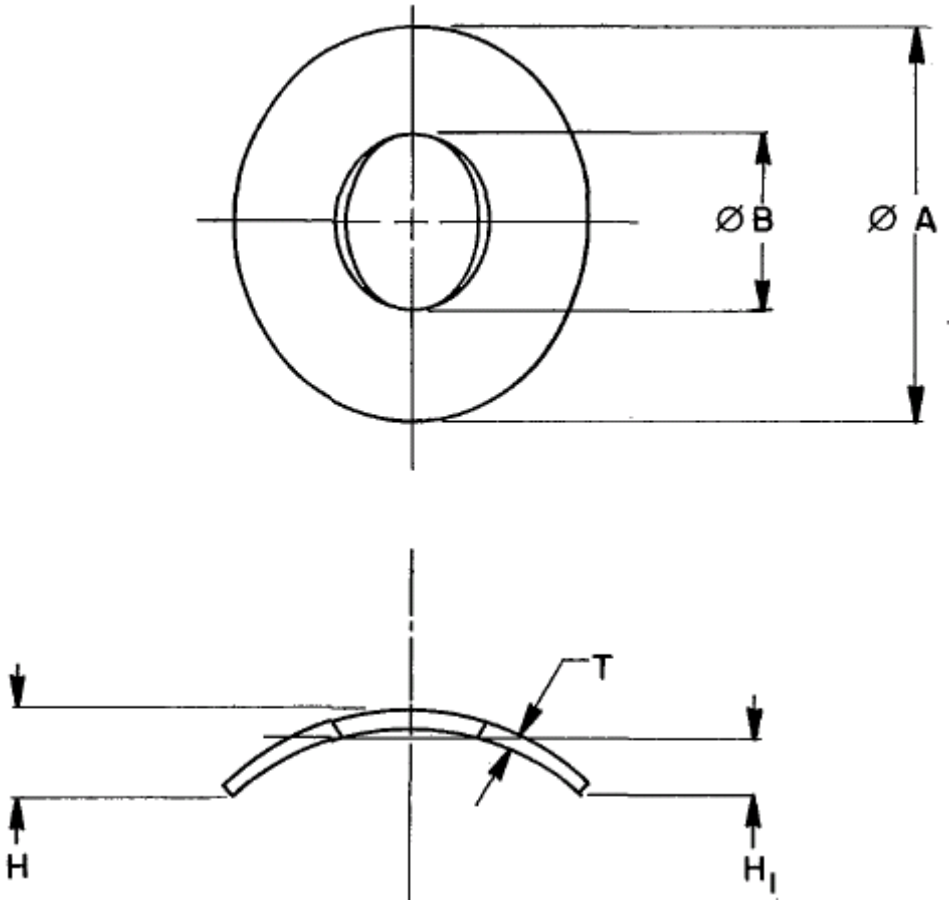

FIGURE 1. WASHER, SPRING TENSION, CURVED, COPPER-BERYLLIUM.

Downloaded from http://www.everyspec.com

TABLE I. DASH NUMBERS AND DIMENSIONS.

Dash No	ØA OD ±.010	ØB ID ±.005	T Thickness ±.001	H Free Weight ±.008	H_1 Deflection	Load At H_1 ±15% (Lb)
01	.183	.059	.005	.047	.011	2.0
02	.130	.084	.008	.035	.003	2.7
03	.140	.096	.003	.031	.011	.3
04	.273	.112	.005	.047	.024	1.7
05	.378	.122	.008	.047	.029	5.2
06	.250	.125	.008	.047	.013	3.8
07	.176	.127	.010	.032	.005	3.3
08	.230	.128	.008	.047	.011	3.4
09	.250	.133	.006	.032	.016	1.9
10	.312	.136	.006	.062	.026	2.4
11	.283	.137	.008	.047	.016	3.9
12	.640	.147	.005	.062	.057	1.0
13	.312	.155	.010	.062	.016	6.0
14	.249	.161	.011	.047	.010	4.2
15	.312	.189	.005	.062	.039	1.0
16	.565	.204	.025	.052	.021	48
17	1.065	.252	.015	.093	.078	22
18	.497	.254	.006	.100	.067	2.1
19	.691	.259	.006	.070	.064	1.3
20	.495	.260	.007	.125	.057	2.7
21	.437	.263	.012	.062	.026	7.0
22	.551	.296	.010	.085	.049	5.6
23	.465	.377	.006	.093	.058	1.0
24	.623	.439	.012	.093	.052	5.0
25	.750	.505	.015	.130	.059	8.5

Downloaded from http://www.everyspec.com

REQUIREMENTS:

1. Material. Copper-Beryllium (see MIL-DTL-12133).

2. Protective coating and surface treatment. Cadmium plate or Plain (see MIL-DTL-12133).

3. Part number: The part number consists of the letter "M", the basic number of this specification sheet, followed by a dash number taken from Table I and a finish code letter.

Example: M12133/9 – 09 P

- P — Finish codes
  - P – Cadmium plate
  - No code - plain
- 09 — Dash number
- M12133/9 — Specification sheet number

M12133/9-09P Indicates – Washer, Spring Tension, Curved, Copper-Beryllium; .250 OD; .133 ID; .006 thick; Cadmium plate.

NOTES:

1. All dimensions are in inches.

2. CHANGES FROM PREVIOUS ISSUE. Marginal notations are not used in this revision to identify changes with respect to the previous issue due to the extent of the changes.

MILITARY INTEREST

Custodians:
Army - AR
Navy - OS
Air Force - 99

Preparing activity:
DLA - IS

(Project 5310-2015-012)

NOTE: The activities listed above were interested in this document as of the date of this document. Since organizations and responsibilities can change, you should verify the currency of the information above using the ASSIST Online database at https://assist.dla.mil.