Downloaded from http://www.everyspec.com

INCH-POUND

MIL-DTL-12133/8A
19 October 2015
SUPERSEDING
MIL-W-12133/8
18 June 1987

DETAIL SPECIFICATION SHEET

WASHER, SPRING TENSION, CURVED, CRES 302

This specification is approved for use by all Departments and Agencies of the Department of Defense.

The requirements for acquiring the product described herein shall consist of this specification sheet and procurement specification MIL-DTL-12133.

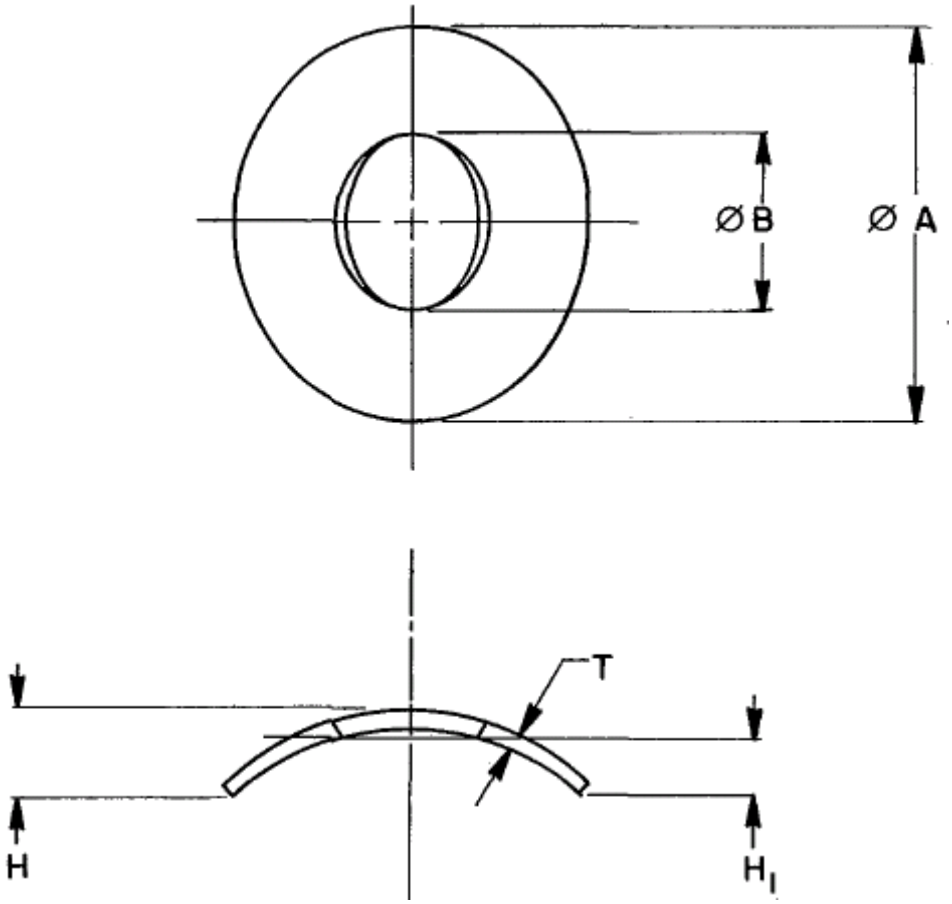

FIGURE 1. WASHER, SPRING TENSION, CURVED, CRES 302.

Downloaded from http://www.everyspec.com

TABLE I. DASH NUMBERS AND DIMENSIONS.

Dash No	ØB ID +.010 -.000	ØA OD ±.010	H	H_I	T Thickness ±.001	Free Fit In Hole Dia	Load At H_I ±15% (Lb)
1	.135	.245	.034	.020	.0060	.250	2.0
2	.135	.270	.029	.018	.0075	.281	3.0
3	.148	.270	.052	.028	.0045	.281	6.3
4	.148	.270	.035	.022	.0070	.281	2.5
5	.148	.322	.034	.021	.0100	.345	7.5
6	.174	.370	.039	.024	.0120	.375	9.0
7	.203	.322	.053	.026	.0050	.345	1.0
8	.203	.370	.047	.028	.0090	.375	4.5
9	.265	.490	.063	.034	.0110	.500	7.0
10	.363	.672	.081	.047	.0150	.688	11.0
11	.395	.735	.086	.050	.0160	.750	12.0
12	.462	.980	.107	.061	.0210	1.000	22.5
13	.531	.795	.129	.069	.0113	.812	5.0
14	.525	.980	.110	.063	.0210	1.000	20.0

REQUIREMENTS:

1. Material. CRES (austenitic) (see MIL-DTL-12133).

2. Protective coating and surface treatment. Corrosion resistant steel washers (austenitic) shall be cleaned, descaled and passivated (see MIL-DTL-12133).

3. Part number: The part number consists of the letter “M”, the basic number of this specification sheet, followed by a dash number taken from Table I.

Example: M12133/8 – 1

Dash number

Specification sheet number

M12133/8-1 Indicates – Washer, Spring Tension, Curved, CRES 302; .245 OD; .135 ID; .0060 thick.

Downloaded from http://www.everyspec.com

NOTES:

1. All dimensions are in inches.

2. CHANGES FROM PREVIOUS ISSUE. Marginal notations are not used in this revision to identify changes with respect to the previous issue due to the extent of the changes.

MILITARY INTEREST

Custodians:
Army - AR
Navy - OS
Air Force - 99

Preparing activity:
DLA - IS

(Project 5310-2015-011)

NOTE: The activities listed above were interested in this document as of the date of this document. Since organizations and responsibilities can change, you should verify the currency of the information above using the ASSIST Online database at https://assist.dla.mil.