Downloaded from http://www.everyspec.com

INCH - POUND

MIL-DTL-11996C
28 August 2015
SUPERSEDING
MIL-H-11996B
28 October 1980

DETAIL SPECIFICATION

HANDSETS
GENERAL SPECIFICATION FOR

Inactive for new design after 30 March 1999

This specification is approved for use by all
Departments and Agencies of the Department of Defense.

1. SCOPE

1.1 Scope. This specification covers three types of handsets designated as handset H-60( )/PT, handset H-156( )/PT, and handset H-165( )/PT. Transmitter element TA-117, telephone receiver TA-235 ( ) /PT and switch assembly SA-129( )/PT are part of the above handsets. Electrical cord assembly CX-2151( )/U is part of handset H-60( )/PT. Cord CX-4533( )/U is part of handset H-165( )/PT. A cord assembly constructed as specified herein is part of handset H-156( )/PT.

2. APPLICABLE DOCUMENTS

2.1 General. The documents listed in this section are specified in sections 3, 4, or 5 of this specification. This section does not include documents cited in other sections of this specification or recommended for additional information or as examples. While every effort has been made to ensure the completeness of this list, document users are cautioned that they must meet all specified requirements of documents cited in sections 3, 4, or 5 of this specification, whether or not they are listed.

2.2 Government documents.

2.2.1 Specifications, standards, and handbooks. The following specifications, standards, and handbooks form a part of this document to the extent specified herein. Unless otherwise specified, the issues of these documents are those cited in the solicitation or contract.

Since Navy-EC is the Navy custodian for this document, all Navy review activities should forward their comments directly to DLA Land and Maritime. Beneficial comments, recommendations, additions, deletions, clarifications, etc., and any data that may improve this document should be sent to: DLA-CC, DLA Land and Maritime, ATTN: VAI, P.O. Box 3990, Columbus, Ohio 43218-3990 or emailed to sound@dscc.dla.mil. Since contact information can change, you may want to verify the currency of this address information using the ASSIST Online database at https://assist.dla.mil.

AMSC N/A FSC 5965

Downloaded from http://www.everyspec.com

FEDERAL SPECIFICATIONS

FF-S-92	- Screw, Machine: Slotted, Cross-Recessed or Hexagon head.

DEPARTMENT OF DEFENSE SPECIFICATIONS

MIL-W-76	- Wire and Cable, Hookup, Electrical, Insulated.
MIL-T-152	- Treatment, Moisture and 152-Resistant, of Communications, Electronic, and Associated Electrical Equipment.
MIL-I-631	- Insulation, Electrical, Synthetic-Resin Composition. Nonrigid.
MIL-DTL-3885	- Cable Assemblies and Cord Assemblies, Electrical (Power, Control, and Audio-Frequency); General Specification for.
MIL-I-3930	- Insulating and Jacketing Compounds, Electrical (For Cables, Cords, and Wires).
MIL-G-10944	- Gage, Dimensional Control.
MIL-DTL-13924	- Coating, Oxide, Black, For Ferrous Metals.

DEPARTMENT OF DEFENSE STANDARDS

MIL-STD-129	- Marking for Shipment and Storage.
MIL-STD-202	- Test Methods for Electronic and Electrical Component Parts.
MIL-STD-810	- Environmental Test Methods.
MIL-STD-1285	- Marking of electrical and Electronics Parts.

DEPARTMENT OF DEFENSE HANDBOOK

MIL-HDBK-454	- General Guidelines for Electronic Equipment

(Copies of these documents are available online at http://quicksearch.dla.mil.)

2.2.2 Other Government documents, drawings, and publications. The following other Government documents, drawings, and publications form a part of this document to the extent specified herein. Unless otherwise specified, the issues of these documents are those cited in the solicitation or contract.

DRAWINGS

DEPARTMENT OF ARMY (CAGE 80063)

SK-N-864	- Simulated Gun Blast Production Equipment.
SM-B-207906	- Handset H-60 ( )/U.
SC-D-55381	- Handle, Handset Assembly.
SC-D-76454	- Handset, H-156/U (Assembly).
SC-D-76457	- Cord Assembly for Handset H-156 ( )/U.
SC-DL-19832	- Cord Assembly Electrical CX-2151 ( )/U.
SC-DL-55379	- Handset H-165 ( )/U.
SC-DL-76453	- Handset H-156 ( )/U.
SC-DL-2079 60	- Switch Assembly SA-129/PT.
SM-C-207940	- Crystal Unit, Rectifying.
SM-D-207907	- Handset H-60/PT (Assembly).

[Contractor(s) who require copies of these documents, in connection with an open solicitation or contract award, are first directed to DIBBS and cFolders. If the related Material Number (NSN) is not

Downloaded from http://www.everyspec.com

currently on solicitation or award, the industry requester(s) is directed under the 'Freedom of Information Act (FOIA)' to: DLA Troop Support - Supply Support, Attn: DSCP-FQSA, 700 Robbins Avenue, Philadelphia, PA 19111-5092, PHONE 215-737-7494.]

(In the event of a technical issue/problem with a drawing, copies of these documents required by contractors may be obtained from the procuring activity at DSCC.cddwgs@dla.mil, or as directed by the contracting officer. The Requestor needs to justify their requirement, by providing all of the following information:

* Contract or Solicitation number.
* Material Number (s) [NSN's]
* Company Name.
* "Attention to" contact information (Originator name/telephone-extension/email).
* Company Address & CAGE.")

2.3 Non-Government publications. The following documents form a part of this document to the extent specified herein. Unless otherwise specified, the issues of these documents are those cited in the solicitation or contract.

AEROSPACE INDUSTRIES ASSOCIATION (AIA)

AIA/NAS NASM35274	- SCREW, MACHINE, DRILLED FILLISTER HEAD, SLOTTED, BRASS, BLACK CHEMICAL FINISH, UNF-2A

(Copies of these documents are available online at http://www.aia-aerospace.org

AMERICAN NATIONAL STANDARDS INSTITUTE (ANSI)

ANSI S3.7	- Method for Coupler Calibration of Earphones
ASA S1.15 PART 2	- American National Standard Measurement Microphones – Part 2: Primary Method for Pressure Calibration of Laboratory Standard Microphones by the Reciprocity Technique

(Copies of these documents are available on-line at http:/www.ansi.org.)

ASTM INTERNATIONAL

ASTM A240/A240M	- Standard Specification for Chromium and Chromium-Nickel Stainless Steel Plate, Sheet, and Strip for Pressure Vessels and for General Applications
ASTM A666	- Standard Specification for Annealed or Cold-Worked Austenitic Stainless Steel Sheet, Strip, Plate, and Flat Bar
ASTM A693	- Standard Specification for Precipitation-Hardening Stainless and Heat-Resisting Steel Plate, Sheet, and Strip
ASTM B16/16M	- Standard Specification for Free-Cutting Brass Rod, Bar and Shapes for Use in Screw Machines
ASTM B19	- Standard Specification for Cartridge Brass Sheet, Strip, Plate, Bar, and Disks
ASTM B36/B36M	- Standard Specification for Brass Plate, Sheet, Strip, And Rolled Bar
ASTM B121/B121M	-..Standard Specification for Leaded Brass Plate, Sheet, Strip, and Rolled Bar

Downloaded from http://www.everyspec.com

ASTM B122/B122M	-	Standard Specification for Copper-Nickel-Tin Alloy, Copper-Nickel-Zinc Alloy (Nickel Silver), and Copper-Nickel Alloy Plate, Sheet, Strip, and Rolled Bar
ASTM B124/124M	-	Standard Specification for Copper and Copper Alloy Forging Rod, Bar, and Shapes
ASTM B194	-	Standard Specification for Copper-Beryllium Alloy Plate, Sheet, Strip, and Rolled Bar
ASTM B339	-	Standard Specification for Pig Tin
ASTM B545	-	Standard Specification for Electrodeposited Coatings of Tin
ASTM D295	-	Standard Test Methods for Varnished Cotton Fabrics Used for Electrical Insulation
ASTM D3955	-	Standard Specification for Electrical Insulating Varnishes
ASTM D2000	-	Standard Classification System for Rubber Products in Automotive Applications

(Copies of these documents are available online at http://www.astm.org.)

INTERNATIONAL ORGANIZATION FOR STANDARDIZATION (ISO)

ISO 10012 - Measurement Management Systems - Requirements for Measurement Processes and Measuring Equipment - First Edition

(Copies of these documents are available online at http://www.iso.org

IPC - ASSOCIATION CONNECTING ELECTRONICS INDUSTRIES

J-STD-004	-	Requirements for Soldering Fluxes
J-STD-005	-	Requirements for Soldering Pastes
J-STD-006	-	Requirements for Electronic Grade Solder Alloys and Fluxed and Non-Fluxed Solid Solders for Electronic Soldering Applications

(Copies of these documents are available online at http://www.ipc.org

NCSL INTERNATIONAL

NCSL Z540.3 - Requirements for the Calibration of Measuring and Test Equipment

(Copies of these documents are available online at http://www.ncsli.org

SAE INTERNATIONAL

SAE AMS-QQ-S-763	-	Steel, Corrosion Resistant, Bars, Wire, Shapes, and Forgings (Stabilized Type)
SAE AS8660	-	Silicone Compound NATO Code Number S-736

(Copies of these documents are available online at http://standards.sae.org/

(Technical society and technical association specification and standards are generally available for reference from libraries. They are also distributed among technical groups and using Federal agencies.)

2.4 Order of precedence. Unless otherwise noted herein or in the contract, in the event of a conflict between the text of this document and the references cited herein (except for related associated specifications, specification sheets, or MS sheets), the text of this document takes precedence. Nothing

Downloaded from http://www.everyspec.com

in this document, however, supersedes applicable laws and regulations unless a specific exemption has been obtained.

3. REQUIREMENTS

3.1 Specification sheets. The individual item requirements shall be as specified herein and in accordance with the applicable specification sheets. In the event of any conflict between requirements of this specification and the specification sheets, the latter shall govern (see 6.2).

3.2 First article. When specified, (see 6.3) the contractor shall furnish sample unit(s) for first article inspection and approval (see 4.5 and 6.3).

3.3 Materials. Materials shall be as specified in table I and 4.3.

3.3.1 Recycled, recovered, environmentally preferable, or biobased materials. Recycled, recovered, environmentally preferable, or biobased materials should be used to the maximum extent possible, provided that the material meets or exceeds the operational and maintenance requirements, and promotes economically advantageous life cycle costs.

3.3.2 Pure tin (see 6.4). The use of pure tin, as an underplate or final finish, is prohibited both internally and externally. Tin content of loudspeaker components and solder shall not exceed 97 percent, by mass. Tin shall be alloyed with a minimum of 3 percent lead, by mass.

3.4 Design and construction.

3.4.1 Click reducer. A suitable click reducer as specified in SM-C-207940 or equal shall be used with either the receiver element or the receiver circuit to limit the maximum acoustic output of the receiver, and to guard against possible damage to the receiver element caused by high transient voltages.

3.4.2 Connections. Soldering leads, lugs, and terminals shall be tinned, silver-plated, or lead-alloy coated. Wires subject to breakage at the connections shall be provided with terminals that grip the wire insulation. Solderless terminals may be used on tinned, standard wire in power or audio circuits, but other wire connections shall be soldered. Where practicable, wire soldered to terminals shall be looped at least once and not more than twice around the terminals before sobering, or equivalent means shall be employed. Textile insulation ends of wires shall be secured against fraying by mechanical means or by application of varnish conforming to ASTM D295 and D3955.

3.4.3 Cord, cordage, and cord assembly. The cord and cordage shall conform to SC-DL-19832, And SC-D-76457, as specified (see 3.1).

3.4.4 Gage. Gages shall conform to MIL-G-10944.

3.4.5 Plugs. The plugs shall be as specified (see 3.1).

3.4.6 Screws. Screws shall conform to FF-S-92 or AIA/NAS NASM35274 .

3.4.7 S-hook assembly (when applicable). The S-hook assembly shall conform to the specified drawing (see 3.1).

3.4.8 Soldering. Soldering process shall conform to DOD-STD-1866.

3.4.9 Switch assembly. The switch assembly SA-129 ( )/PT shall be constructed in accordance with SC-DL-207960 (see 3.1).

Downloaded from http://www.everyspec.com

3.4.10 Transmitter element. The transmitter element TA-117 ( )/PT shall be constructed in accordance with figure 2.

3.4.11 Receiver element. The receiver element TA-235 ( )/PT shall be constructed in accordance with figure 1.

3.4.12 Dimensions and configurations. The dimensions and configurations of these handsets shall be in accordance with appropriate figures (see 3.1) and SM-B-207906, SC-DL-76453, and SC-DL-55379, as specified (see 3.1).

3.4.13 Handset assemblies. Handset assemblies shall be in accordance with SM-D-207907, SC-D-76454, and SC-D-55381, as specified (see 3.1).

3.5 Receiver. The receiver shall meet the following requirements when tested.

3.5.1 Sensitivity. When tested as specified in 4.7.2.1, the receiver output shall be 74 ± 3 dB above 2 Pascal's (Pa). at 1,000 Hz and ground level.

3.5.2 Frequency response. When tested as specified in 4.7.2.2, the frequency response of the receiver shall be within the following limits:

Frequency range Hz	Deviation – dB (from the 1 kHz level)
500 - 1300	+3 -3
1300 - 3200	+5 -5

3.5.3 Impedence. When tested as specified in 4.7.2.3, the impedance of each receiver element at 1 kHz shall be 150 ± 15 Ω.

3.5.4 Overload. When tested as specified in 4.7.2.4, the receiver shall show no evidence of rattling or distortion.

3.5.5 Magnetic stability. When tested as specified in 4.7.2.5, the frequency response degradation of each element shall not exceed ± 2 dB, from levels specified in 3.5.2.

3.5.6 Dielectric strength end leakage resistance. When tested as specified in 4.7.2.6, the receiver element shall show no signs of breakdown or decrease of the insulation resistance below 1 megohms between the case and the terminals.

3.6 Transmitter. The transmitter shall meet the following requirements when tested.

3.6.1 Sensitivity. When tested as specified in 4.7.3.1, the transmitter output shall not be less than 46 dB above a zero reference level of 0.001 volt.

Downloaded from http://www.everyspec.com

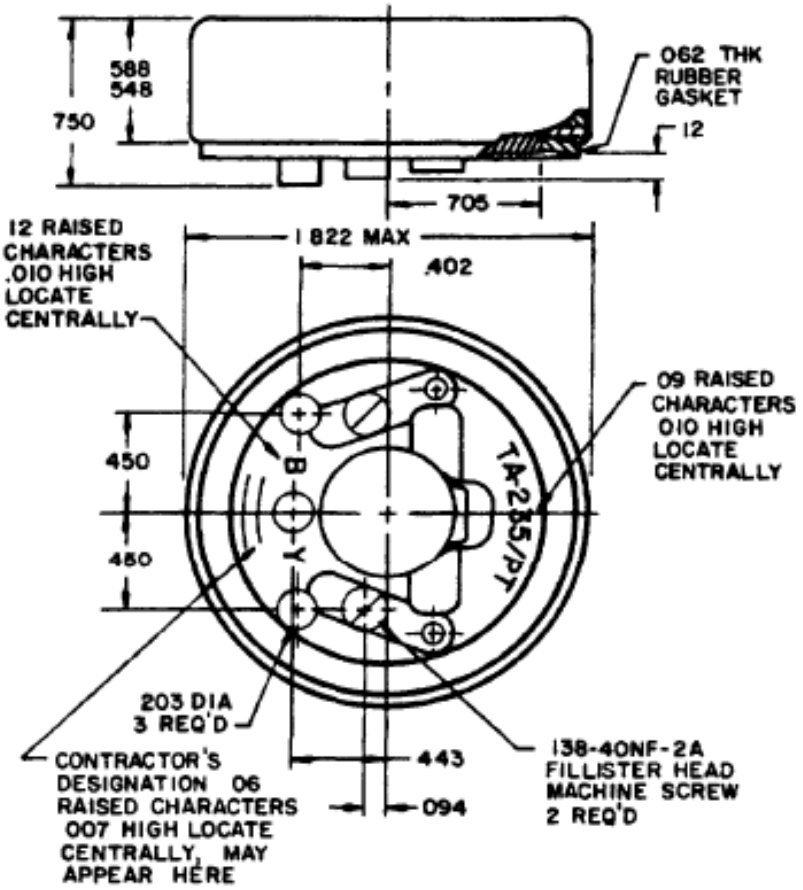

INCHES	MM
.06	1.5
.062	1.57
.09	2.3
.094	2.39
.12	3.0
.138	3.51
.203	5.16
.402	10.21
.443	11.25
.450	11.43
.548	13.92
.588	14.94
.705	17.91
.750	19.05
1.822	46.28

NOTES:

1. Dimensions are in inches.
2. Metric equivalents are given for general information only and are based upon inch = 25.4 mm.
3. Unless otherwise specified, tolerances are ± 0.005 (.13 mm) for three place decimals and ± 0.02 (.5 mm) for two place decimals.

FIGURE 1. Receiver element.

Downloaded from http://www.everyspec.com

INCHES	MM
.02	.5
.06	1.5
.12	3.0
.203	5.16
.268	6.81
.293	7.44
.405	10.29
.563	14.30
.584	14.83
1.054	26.77
1.814	46.08

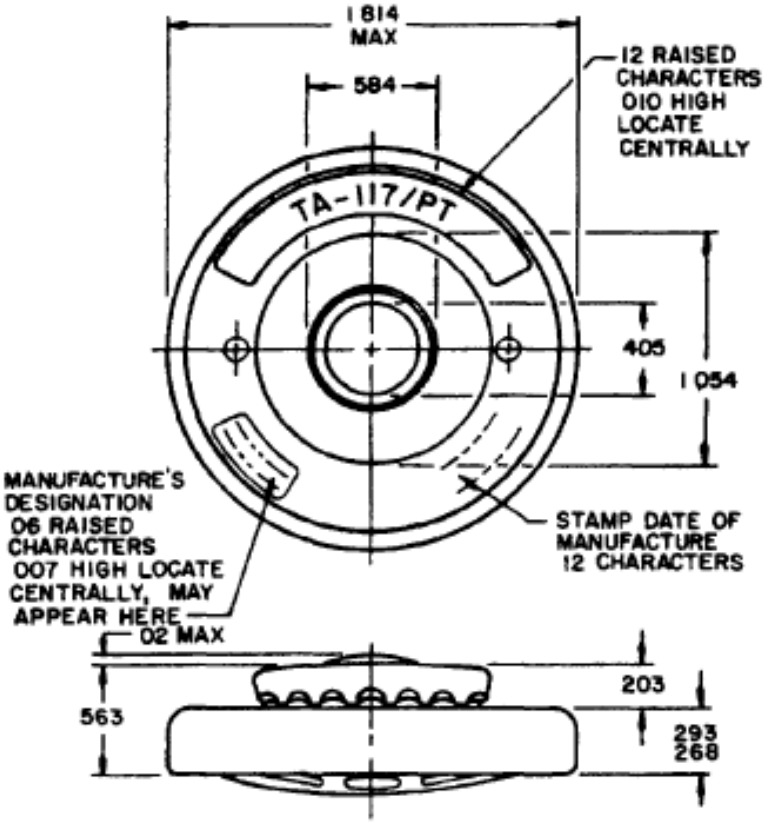

NOTES:

1. Dimensions are in inches.
2. Metric equivalents are given for general information only and are based upon 1.00Inch = 25.4 mm.
3. Unless otherwise specified, tolerances are ± 0.005 (.13 mm) for three place decimals and ± 0.02 (.5 mm) for two place decimals.

FIGURE 2 Transmitter element.

Downloaded from http://www.everyspec.com

3.6.2 Frequency response.

a. When tested in a vertical position as specified in 4.7.3.2, the frequency response of the transmitter shall follow a trend line that rises between the limits of 300 Hz to 3,000 Hz at the approximate rate of 2 dB per octave and intersects the level specified in 3.6.1. The rate of change in response shall not exceed the following limits:

Frequency range (in Hz)	Rate of change
300 - 600	5 dB per 100 Hz
600 - 1,000	5 dB per 200 Hz
1,000 - 3,000	5 dB per 250 Hz

b. When tested in positions other than vertical, the variation in frequency response shall not exceed the following limits:

Position	Deviation from vertical response	
40° face up	+5 dB	-5 dB
90° face up	+7 dB	-7 dB
90° face down	+9 dB	-7 dB

3.6.3 Frequency band response. When tested as specified in 4.7.3.3, the transmitter frequency response shall be not less than 52 dB above .001 volt across the 600 Ω load. The measured values shall be corrected to compensate for transformer loss.

3.6.4 Resistance. When tested as specified in 4.7.3.4, the resistance of each transmitter shall be 35 ± 10 Ω, in the unaged state.

3.6.5 Unagitated current. When tested as specified in 4.7.3.5, the unagitated current shall not exceed 125 milliamperes.

3.6.6 Thermal Voltage. When tested as specified in 4.7.3.6, the maximum allowable thermal voltage on individual unagitated transmitter elements at any angle of the transmitter diaphragm relative to vertical shall be 7.0×10^{-3} volts.

3.7 Operational (talk). When handsets are tested as specified in 4.7.4, there shall be no buzzing, rattling, or other spurious sounds. The transmission shall be an intelligible signal.

3.8 Vibration. When handsets are tested as specified in 4.7.5, there shall be no evidence of physical or electrical defects. Following the test, the frequency response shall not exceed ± 2 dB from the limits specified in 3.5.2 and ± 4 dB from the limits specified in 3.6.2.

3.9 Immersion. When handsets are tested as specified in 4.7.6, there shall be no evidence of physical or electrical defects. Following the test and after removing the excess water from the handset by shaking, the frequency response shall not exceed ± 2 dB from the limits specified in 3.5.2 and 3.6.2.

3.10 Shock (drop). When handsets are tested as specified in 4.7.7, there shall be no evidence of physical or electrical defects, except minor chipping. Following the test, the frequency response shall not exceed ± 2 dB from the limits specified in 3.5.2 and ± 4 dB from the limits specified in 3.6.2.

3.11 Thermal shock. When handsets are tested as specified in 4.7.8, there shall be no evidence of physical or electrical defects. Following the test, the frequency response shall not exceed ± 2 dB from the limits specified in 3.5.2 and 3.6.2.

Downloaded from http://www.everyspec.com

3.12 Tumbling. When handsets are tested as specified in 4.7.9, there shall be no evidence of physical or electrical defects except contact scars. Following the test, the frequency response shall not exceed ± 2 dB from the limits specified in 3.5.2 and ± 4 dB from the limits specified in 3.6.2.

3.13 Relative humidity. When handsets are tested as specified in 4.7.10, there shall be no evidence of physical or electrical defects. Following the test the frequency response shall not exceed ± 2 dB from the limits specified in 3.5.2 and ± 4 dB and from the limits specified in 3.6.2.

3.14 Gunblast resistance. When handsets are tested as specified in 4.7.11, there shall be no evidence of physical or electrical defects. Following the test, the frequency response shall not exceed ± 2 dB from the limits specified in 3.5.2 and ± 4 dB from the limits specified in 3.6.2.

3.15 Switches (when applicable). When handsets are tested as specified in 4.7.12, there shall be no evidence of physical damage, electrical defects, or degradation in performance. The force to operate the switch shall be 3 pounds maximum, and the force to hold the switch in the operate position shall be 2 pounds maximum.

3.16 Interchangeability. Corresponding units and replaceable assemblies, subassemblies, and replaceable parts shall be physically and functionally interchangeable as units without modification thereof or of other articles, with which the items are used. When dimensions, ratings, characteristics. etc., are not specified, the manufacturer's design limits shall be used to determine compliance. When a dimension is not within specified or design limits, it shall be considered a major defect. The following shall be examined:

a. External and internal dimensions of insertable assemblies, when such dimensions affect mating of parts.
b. Dimensions of cavities, when such dimensions affect insertion of items.
c. Size and form of special threads.

3.17 Marking. Handsets shall be marked in accordance with MIL-STD-1285, with the type number and the manufacturer's name or symbol, and as specified (see 3.1).

3.18 Workmanship. Handsets shall be processed in such a manner as to be uniform in quality and shall be free from loose or deposited foreign materials, and other defects that will affect life, serviceability, or appearance.

4. VERIFICATION.

4.1 Test equipment end inspection facilities. Test and measuring equipment and inspection facilities of sufficient accuracy, quality and quantity to permit performance of the required inspection shall be established and maintenance by the contractor. The establishment and maintenance of a calibration system to control the accuracy of the measuring and test equipment shall be in accordance with MIL-STD-45662.

4.1.1 Test equipment.

a. Vacuum tube voltmeter. A Ballantine model 300 vacuum tube voltmeter or equal shall be used having a flat frequency response from at least 10 Hz to 10,000 Hz and capable of measuring voltages from 0.001 volt (rms) to 10 volts or more.
b. Sound source. A "Bruel & Kjaer" 4227 artificial mouth ~~Western Electric Company artificial mouth per drawing BO-256514~~ or equal sound source shall be used.
c. Audio oscillator. A general radio type 1304-B best frequency oscillator or equal having a wave form distortion of less than 2 percent shall be used.

Downloaded from http://www.everyspec.com

d. Band frequency oscillator. An oscillator shall be used that will generate a band frequency sweeping at a linear rate from 600 Hz to 1,500 Hz to 600 Hz 12 times per second.
e. Condenser microphone. A Western Electric 640AA condenser microphone or equal, with its protective grid, shall be used for measuring sound pressures. It shall be calibrated by the reciprocity method in accordance with ASA S1.15 PART 2 ~~S1.10-1966~~.

4.1.2 Test apparatus. The transmitter element assembled in its housing shall be mounted coaxially with the sound source and with a 1/4 inch air space between the guard ring on the sound source and the cap of the transmitter housing as determined with a flat, 1/4 inch thick gauge that is wider than the cap diameter. The housing shall be acoustically and mechanically equivalent to the transmitter end of the handset H-60/PT, including the cap of the handset. The test apparatus shall provide mountings for holding and rotating the sound source and test transmitter element in the following positions.

a. Rotation about its axis, through 360 degrees.
b. Rotation through 180 degrees in a vertical plane perpendicular to the transmitter diaphragm.

4.1.3 Sound pressure calibration. Mount the condenser microphone concentrically in a baffle having the same shape as the cap of the transmitter housing, so that the periphery of the plane of the protective grid of the microphone is flush with the front surface of the baffle. Mount the baffle and microphone in the specified test position. The electrical output of the microphone shall be measured either with a volume level indicator or a vacuum tube voltmeter. The electrical input to the sound source from the:

a. Band frequency oscillator shall be adjusted at individual frequencies in the 600 Hz to 1,600 Hz range to obtain sound pressures within $\pm$ 2 dB of the mean band frequency pressure specified.
b. Audio oscillator shall be adjusted to obtain the specified sound pressure at each test frequency.

4.2 Classification of inspection. The inspections specified herein shall be classified as follows:

a. Materials inspection (see 4.3).
b. First article inspection (see 4.5).
c. Conformance inspection (see 4.6).

4.3 Materials Inspection. Materials inspection shall consist of certification supported by verifying data that the materials listed in table I, used in fabricating the handsets, are in accordance with the applicable referenced specifications or requirements prior to such fabrication.

Downloaded from http://www.everyspec.com

TABLE I. Materials inspection.

Material	Paragraph	Applicable Specification
Brass	3.3	ASTM B16/B16M, B36, B121, B124
Cloth	3.3	MIL-C-2069
Coating (black oxide)	3.3	MIL-DTL-13924
Copper beryllium strip	3.3	ASTM B194
Copper, cartridge brass	3.3	ASTM B19
Copper-nickel-zinc alloy	3.3	ASTM B122/B122M
Cord and cable	3.3	MIL-DTL-3885
Finishes	3.3	MIL-DTL-14072
Fungus-resistant materials	3.3	MIL-HDBK-454 or MIL-T-152
Insulation	3.3	MIL-I-631 or MIL-I-3930
Rubber	3.3	ASTM D2000
Silicone compound	3.3	SAE AS8660
Tin plating	3.3	ASTM B339 , B545
Solder	3.3	J-STD-004, 005, 006
Steel	3.3	SAE-AMS-QQ-S-763, ASTM A240, A666, A693
Wire	3.3	MIL-W-76

4.4 Inspection conditions and preconditioning.

4.4.1 Conditions. Unless otherwise specified herein, all inspections shall be performed in accordance with the test conditions specified in the “GENERAL REQUIREMENTS” of MIL-STD-202. All acoustical testing except operational testing shall be made in an environment where the ambient noise level shall be at least 6 dB lower than the test levels involved.

4.4.2 Bounce preconditioning. The handset shall be placed in its normal operating position on the table of the Package Tester, as made by the L.A.B. Corporation, Skaneateles, New York 13152, or equal. The package tester, shafts in phase, shall have a speed such that it is just possible to insert a 1/32- inch-thick strip of material under one corner or edge of the handset to a distance of 3 inches as the handset bounces. The handset shall be subjected to 1 minute of this bounce preconditioning. Following the bounce preconditioning, the handset shall not be repaired, adjusted, dined, cleaned, or otherwise changed prior to the first article or quality conformance inspection.

4.5 First article inspection (see 3.2). First article inspection shall be performed by the contractor after award of contract and prior to production, at a location acceptable to the Government. First article inspection shall be performed on sample units which have been produced with equipment and procedures normally used in production. First article approval is valid only on the contract under which it is granted, unless extended by the Government to other contracts.

4.5.1 Sample size. Twelve handsets shall be subjected to first article inspection.

4.5.2 Inspection routine. The sample shall be subjected to the inspections specified in table II, in the order shown. All sample units shall be subjected to the inspections of group I. The sample shall then be divided equally into three groups and subjected to the inspections for their particular group.

Downloaded from http://www.everyspec.com

TABLE II. First article inspection.

Inspection	Requirement Paragraph	Method Paragraph
Group I		
Visual and mechanical	3.2, 3.4 thru 3.4.13, inclusive and 3.16, 3.17, and 3.18 inclusive	4.7.1
Receiver	3.5	4.7.2
Sensitivity	3.5.1	4.7.2.1
Frequency Response	3.5.2	4.7.2.2
Impedance	3.5.3	4.7.2.3
Overload	3.5.4	4.7.2.4
Magnetic stability	3.5.5	4.7.2.5
Dielectric strength and Leakage resistance	3.5.6	4.7.2.6
Transmitter	3.6	4.7.3
Sensitivity	3.6.1	4.7.3.1
Frequency response	3.6.2	4.7.3.2
Frequency band response	3.6.3	4.7.3.3
Resistance	3.6.4	4.7.3.4
Unagitated current	3.6.5	4.7.3.5
Thermal voltage	3.6.6	4.7.3.6
Operational (talk)	3.7	4.7.4
Group II		
Vibration	3.8	4.7.5
Immersion	3.9	4.7.6
Shock (drop)	3.10	4.7.7
Thermal shock	3.11	4.7.8
Group III		
Tumbling	3.12	4.7.9
Relative humidity	3.13	4.7.10
Gunblast resistance	3.14	4.7.11
Group IV		
Switches (when applicable)	3.15	4.7.12

4.5.3 Failures. Any failures in groups I and IV, and more than one failure in groups II and III shall be cause for refusal to grant first article approval.

4.6 Conformance inspection.

4.6.1 Inspection of product for delivery. Inspection of product for delivery shall consist of groups A and B inspection.

4.6.1.1 Inspection lot. An inspection lot shall consist of all handsets of the same type, produced under essentially the same conditions, and offered for inspection at one time.

Downloaded from http://www.everyspec.com

4.6.1.2 Group A inspection. Group A inspection shall consist of the examination and test specified in table III, in the order shown.

4.6.1.2.1 Sampling plan. A sample of parts shall be randomly selected in accordance with table IV. If one or more defects are found, the lot shall be rescreened and defects removed.

TABLE III. Group A inspection.

Inspection	Requirement Paragraph	Method paragraph
Visual and mechanical ----------	3.3, 3.4, thru 3.4.13 inclusive, 3.16, 3.17, and 3.18 inclusive	4.7.1
Receiver element----------	3.5	4.7.2
Sensitivity----------	3.5.1	4.7.2.1
Frequency response----------	3.5.2	4.7.2.2
Impedance----------	3.5.3	4.7.2.3
Dielectric strength and---------- Leakage resistance	3.5.6	4.7.2.6
Transmitter element	3.6	4.7.3
Sensitivity	3.6.1	4.7.3.1
Frequency response	3.6.2	4.7.3.2
Frequency band response	3.6.3	4.7.3.3
Resistance	3.6.4	4.7.3.4
Operational (talk)	3.7	4.7.4

TABLE IV. Group A and group B sampling plans.

Lot size			Sample size	
			Group A	Group B
1	to	2	Entire lot	Entire lot
3	to	12	Entire lot	3
13	to	25	13	3
26	to	50	13	5
51	to	90	13	6
91	to	150	13	7
151	to	280	20	10
281	to	500	29	11
501	to	1,200	34	15
1,201	to	3,200	42	18
3,201	to	10,000	50	22
10,001	to	35,000	60	29
35,001	to	150,000	74	29
150,001	to	500,000	90	29
over 500,000			102	29

Downloaded from http://www.everyspec.com

4.6.1.2.2 Rejected lots. If an inspection lot is rejected, the contractor may rework it to correct the defects, or screen out the defective units, and resubmit for re-inspection. All failures occurring during testing shall be documented and investigated to determine root cause. Acceptance of the product shall be discontinued until corrective action, which is acceptable to the procuring activity, has been taken. After the corrective action has been taken, the group A inspections shall be repeated (all inspections, or the inspection which originally failed, at the option of the procuring activity). Approval shall be withheld until the inspection has shown that the corrective action was successful. If one or more defects are found in the second sample, the lot shall be rejected and shall not be supplied to this specification.

4.6.1.3 Group B inspection. Group B inspection shall consist of the test specified in table V and shall be made on sample units which have been subjected to and have passed group A inspection

4.6.1.3.1 Sampling plan. A sample of parts shall be randomly selected in accordance with table IV. If one or more defects are found, the lot shall be rescreened and defects removed.

TABLE V. Group B inspection.

Inspection	Requirement paragraph	Method paragraph
Receiver ----------	3.5	4.7.2
Overload----------	3.5.4	4.7.2.4
Magnetic stability ----------	3.5.5	4.7.2.5
Transmitter ----------	3.6	4.7.3
Unagitated current ----------	3.6.5	4.7.3.5
Thermal voltage ----------	3.6.6	4.7.3.6

4.6.1.3.2 Rejected lots. If an inspection lot is rejected, the contractor may rework it to correct the defects, or screen out the defective units, and resubmit for re-inspection. All failures occurring during testing shall be documented and investigated to determine root cause. Acceptance of the product shall be discontinued until corrective action, which is acceptable to the procuring activity, has been taken. After the corrective action has been taken, the group B inspections shall be repeated (all inspections, or the inspection which originally failed, at the option of the procuring activity). Approval shall be withheld until the inspection has shown that the corrective action was successful. If one or more defects are found in the second sample, the lot shall be rejected and shall not be supplied to this specification.

4.6.1.3.3 Disposition of sample units. Sample units which have passed the group B inspection may be delivered on the contract or purchase order if the lot is accepted and the sample units are still within specified electrical tolerances.

4.6.1.4 Group C inspection. Group C inspection shall consist of the tests specified in table VI, in the order shown. Group C inspection shall be made on sample units selected from inspection lots which have passed groups A and B inspections.

4.5.1.4.1 Sampling plan. Group C inspection shall be performed once each month on nine sample units selected without regard to their quality from units produced during the period or each 1,000 units, whichever occurs first. The sample shall be divided equally into three groups and subjected to the tests of subgroups I and II, and III when applicable, of table VI.

4.6.1.4.2 Failures. If one or more sample units fail to pass group C inspection, the sample shall be considered to have failed.

Downloaded from http://www.everyspec.com

TABLE VI. Group C inspection.

Inspection	Requirement paragraph	Method paragraph
Subgroup I		
Vibration ----------	3.8	4.7.5
Immersion ----------	3.9	4.7.6
Shock (prop) ----------	3.10	4.7.7
Subgroup II		
Thermal shock ----------	3.11	4.7.8
Tumbling ----------	3.12	4.7.9
Relative humidity ----------	3.13	4.7.10
Subgroup III		
Switches (when applicable)	3.15	4.7.12

4.6.1.4.3 Disposition of sample units. Sample units which have been subjected to group C inspection shall not be delivered on the contract or purchase order.

4.6.1.4.4 Noncompliance. If a sample fails to pass group C inspection, the manufacturer shall notify the qualifying activity and the cognizant inspection activity of such failure and take corrective action on the materials or processes, or both, as warranted, and on all units of product which can be corrected and which were manufactured under essentially the same conditions, with essentially the same materials and processes, and which are considered subject to the same failure. Acceptance and shipment of the product shall be discontinued until corrective action has been taken; group C inspection shall be repeated on additional sample units (all inspection, or the inspection which the original sample failed, at the option of the qualifying activity). Groups A and B inspection may be reinstituted; however, final acceptance and shipment shall be withheld until the group C inspection has shown that the corrective action was successful. In the event of failure after reinspection, information concerning the failure shall be furnished to the responsible inspection activity and the procuring activity.

4.6.2 Inspection of packaging. The inspection of the packing and marking for shipment and storage shall be in accordance with the quality assurance provisions of the applicable container specification and the marking requirements of MIL-STD-129. The inspection of commercial packaging shall be as specified in the contract (see 6.2).

4.7 Methods of examination end test.

4.7.1 Visual and mechanical examination. The Handsets shall be examined to verify that the materials, design, construction, physical dimensions, interchangeability, marking, and workmanship are in accordance with the applicable requirements (see 3.3, 3.4 thru 3.4.13 inclusive. and 3.16 thru 3.18 inclusive.)

4.7.2 Receiver element.

4.7.2.1 Sensitivity see (3.5.1). Sensitivity measurement shall be made at 1,000 Hz in accordance with ANSI S3.7, using a preferred source resistance of 150 ohms and a type 1 coupler. The standard testing level of 2 Pascal's (Pa).at 1,000 Hz at ground level shall be used. And 1 mW (0.775 volts rms) shall be applied.

Downloaded from http://www.everyspec.com

4.7.2.2 Frequency response (see 3.5.2). Available power frequency response measurement shall be made starting at 500 Hz and extending through 3,200 Hz in sufficient detail to establish definitely the shape of the curve. Response measurements shall be made in accordance with ANSI S3.7, using a preferred source resistance of 150 ohms and a type 1 coupler. The Standard testing level of 2 Pascal's (Pa).at 1,000 Hz and ground level at 1 kHz shall be used. And 1 mW (0.775 volts rms) shall be applied.

4.7.2.3 Impedance (see 3.5.3). The receiver elements shall be measured while mounted as specified for the frequency response test. Connect the receiver element, in series with a non-inductive resistance at least 100 times the rated impedance of the magnetic receiver element, to a source of alternating voltage at 1,000 Hz. Adjust the source voltage to obtain 0.06 volts rms across the receiver element. Replace the receiver element with a variable non-inductive resistance, and without changing the source voltage, adjust the variable resistance to obtain the same voltage as for the receiver element. The ohmic value of the resistance necessary to obtain the rms voltage reading shall be considered, as the impedance of the receiver element.

4.7.2.4 Overload (see 3.5.4). The receiver element shall be tested with a source of voltage whose frequency varies over the range of 500 Hz to 2,500 Hz; the voltage of the source shall be adjusted to provide 1 milliwatt into a resistive load equal in value to the specified impedance of the receiver. The receiver shall then be substituted for the load resistance and placed in close proximity to the ear, and examined for evidence of rattling or distortion.

4.7.2.5 Magnetic stability (see 3.5.5). With the receiver element protected with a click reducer (see 3.4.1) it shall be subjected to a total of six successive discharges of opposite polarity from a 10 microfarad capacitor charged to 130 volts.

4.7.2.6 Dielectric Strength and leakage resistance (see 3.5.6). The insulation between the receiver element windings and the core and between the case and terminals shall receive the application of 500 volts rms 60 Hz for 5 seconds.

4.7.3 Transmitter element.

4.7.3.1 Sensitivity (see 3.6.1). The transmitter sensitivity shall be the level at 1,000 Hz determined with the test procedure in 4.7.3.2.

4.7.3.2 Frequency response (see 3.6.2). Having calibrated the sound source as specified, (see 4.1.3) replace the condenser microphone and its baffle with the transmitter element assembled in its housing with its grid located as specified in 4.1.2, in the vertical position. Connect the transmitter in the circuit shown on figure 3. With the 40 ohm resistor in circuit in place of the transmitter element, adjust the 250 ohm resistor to obtain a direct current of .085 ampere. With the transmitter diaphragm in the vertical plane and with no current flowing, rotate the transmitter smoothly about its axis through an arc of approximately 270 degrees and back to its original position two times at a uniform rate of approximately 1 complete cycle (270 degrees and back) in 2 seconds. Then rotate the test apparatus (see 4.1.2) to the position in which the transmitter is to be tested. Close the circuit and wait approximately 3 seconds for current stabilization. Apply an agitation sweep signal varying uniformly from 1,000 Hz to 3,000 Hz and back to 1,000 Hz every 2 seconds. The agitation intensity of this sweep signal shall be adjusted so that the maximum sound pressure obtained during the sweep is 7 Pascal's (Pa). At the conclusion of the third sweep, the audio oscillator shall be shut off so as not to destroy the previous conditioning. After approximately 3 seconds delay, turn on the test tone signal and using a sound pressure of 2.8 Pascal's (Pa), the voltage frequency response measurements shall be made starting at 300 Hz and extending through 4.000 Hz in sufficient detail to establish definitely the shape of the curve.

Downloaded from http://www.everyspec.com

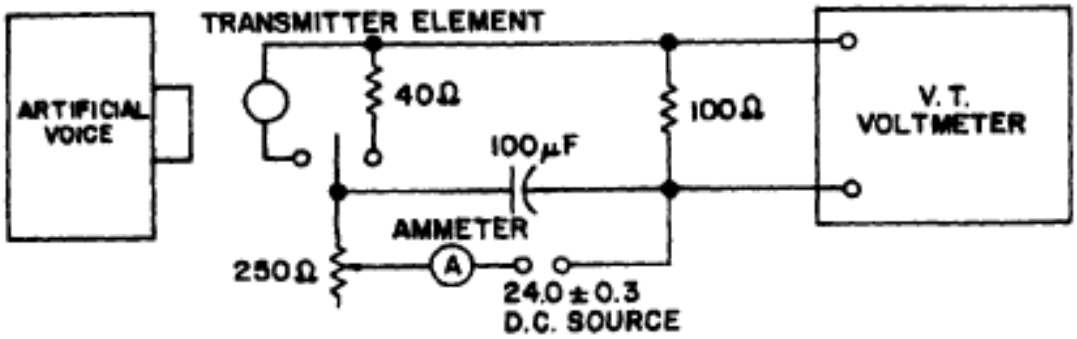

FIGURE 3 Constant current circuit

4.7.3.3 Frequency band response (see 3.6.3). With the transmitter in the sound field, connect the element in the circuit as shown on figure 4, assembled in its housing with its grid located as specified (see 4.1.2). With the transmitter diaphragm in the vertical plane and with current flowing, rotate the transmitter element smoothly about its axis through an arc of approximately 270 degrees and back to its original position two times at a uniform rate of approximately one complete cycle in 2 seconds. Apply the band frequency at a mean pressure of 5.6 Pascal's (Pa) for 3 seconds. After 3 seconds without agitation, apply the band frequency at 2.8 Pascal's (Pa), and at the end of 3 seconds, read the output voltage.

4.7.3.4 Resistance (see 3.6.4). With the circuit set up as shown on figure 3, place the transmitter in a vertical position in its fixture with its leads shorted. Remove the short and with the current flowing, rotate the element as specified in 4.7.3.2. After approximately 3 seconds, apply 1 cycle of an agitation sweep signal varying uniformly from 1,000 Hz to 3,000 Hz and back to 1,000 Hz in approximately 2 seconds. The maximum sound pressure of the signal during the sweep is 2.8 Pascal's (Pa). With the signal set at 1.000 Hz and the sound pressure at 2.8 Pascal's (Pa), measure the dc voltage across the transmitter element with a high resistance dc voltmeter (at least 1,000 ohms/volt).

4.7.3.5 Unagitated current (see 3.6.5). The transmitter element in its housing in the vertical position shall be connected into a test circuit (see figure 5). The transmitter shall be rotated as specified in 4.7.3.2. The circuit shall then be closed and 10 readings of current at intervals of approximately 1 minute shall be taken. The highest reading shall be considered the maximum unagitated current.

NOTE: This test shall me performed in a place that is relatively free from noise and vibration.

4.7.3.6 Thermal voltage (see 3.6.6). The test circuit shall be as shown on figure 3, except with the direct current adjusted to 170 milliamperes.

NOTE: The transmitter element shall be tested in a circuit and a location sufficiently free from noise and vibration so that the transmitter element output results from disturbances generated within the transmitter element only.

Connect the transmitter element in the circuit with current flowing and rotate the transmitter as specified in 4.7.3.2. Then rotate the test apparatus to the position, in which the transmitter is to be tested. Agitate for 10 seconds with a sweep signal varying uniformly from 1,000 to 3.000 Hz and back to 1,000 Hz every 2 seconds, with the agitation intensity adjusted so that the maximum sound pressure obtained during the sweep is 7 Pascal's (Pa). Then with the agitation off, measure the thermal ac voltage across the load resistor generated by the microphone.

Downloaded from http://www.everyspec.com

4.7.4 Operational (talk)(see 3.7). Completely assembled handsets shall be tested by a two-way talk-test to insure correct wiring and satisfactory operation.

4.7.5 Vibration. The handset shall be tested in accordance with method 201 of MIL-STD-202. The following details shall apply:

a. Frequency response of receiver and transmitter element.
b. Method of mounting - Mount so the vibration within the handset can be observed and measured. (To facilitate the observation and measurement, subassemblies may be tested separately provided they are secured to the table in a manner similar to that used to mount them in the handle.
c. Duration of vibration - Change frequency in steps of 1 Hz and maintain each frequency for at least 10 seconds.
d. Test and measurements during and after vibration — Measure vibration amplitude by optical means, or by other means provided that vibrations of the part is not affected by the measurement.
e. Following the test, the handset shall be examined for physical or electrical defects and frequency response shall be measured as specified in 4.7.2.2 and 4.7.3.2.

4.7.6 Immersion (see 3.9). The completed handset shall be immersed for 10 minutes in tap water to a depth of 3 feet. Immediately prior to immersion, the temperature of the equipment shall be 40 degrees F or more above the temperature of the water. The tank in which the handset is immersed shall be of sufficient capacity to maintain the water within ± 2 degrees F of its initial temperature or the temperature of the water shall be maintained within these limits by other means for the duration of the test. Following the test, the handset shall be examined for damage and frequency response shall be measured as specified in 4.7.2.2 and 4.7.3.2.

4.7.7 Shock (drop) (see 3.10). The handset shall be dropped at least six times from a height of 6 feet onto a concrete floor. The handset shall strike at least once on the receiver and once on the transmitter end. Following the test, the handset shall be examined for damage to the handle due to breaking or cracking and the frequency response shall be measured as specified in 4.7.2.2 and 4.7.3.2.

4.7.8 Thermal shock (see 3.11). The handset shall be tested in accordance with method 107 of MIL-STD-202. The following details shall apply:

a. Test condition - A.
b. Final measurement - At the completion of the final cycle when the handset has returned to thermal stability at room ambient temperature the handset shall be examined for damage and frequency response shall be measured as specified in 4.7.2.2 and 4.7.3.2.

4.7.9 Tumbling (see 3.11). The completed handset, less cord, shall be subjected to 500 revolutions in 16-inch drop, standard rotary tester. The floor of the tester shall be 3/16-inch Masonite or equal, with Brinell Hardness test at No. 11 to No. 13 and backed by wood. Following the test, the handset shall be examined for damage and frequency response shall be measured as specified in 4.7.2.2 end 4.7.3.2.

Downloaded from http://www.everyspec.com

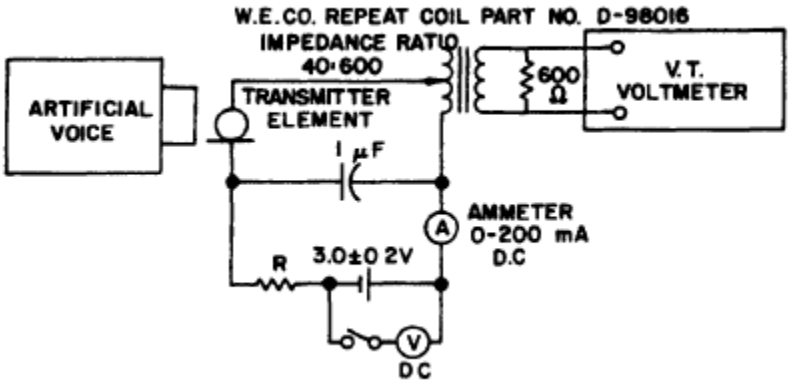

NOTES:

1. The transformer loss shall not exceed 1.0 dB and shall not vary more than 0.2 dB over the frequency range from 300 to 4,000 Hz.
2. The resistance of the circuit, exclusive of the transmitter element, should be 10 ohms.

FIGURE 4. Constant voltage circuit.

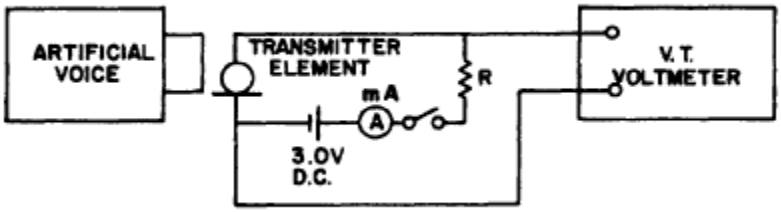

NOTE: Circuit resistance shall be 10 ohms, exclusive of the transmitter element.

FIGURE 5. Three volt circuit.

4.7.10 Relative Humidity (see 3.13). The handsets shall be tested in accordance with method 507 of MIL-STD-810. The following details shall apply:

a. Frequency response of receiver element and transmitter element.
b. Procedure - number III.
c. Handset need not be exposed to extreme high temperature before test.
d. Number of cycles – 5 cycles.
a. Following the test, the handsets shall be examined for damage and frequency response shall be measured as specified in 4.7.2.2 and 4.7.3.2.

4.7.11 Gunblast resistance (see 3.14). The handset shall be mounted on the carriage of the U.S. Navy simulated Gunblast Equipment, in accordance with SK-N-864, or equal. The handset shall be mounted at the reference plane with the transmitter and receiver diaphragms facing the blast source. The handset

Downloaded from http://www.everyspec.com

shall be subjected to 30 rounds of blast at a peak pressure of 9.5 pound per square inch. After the test, handsets shall be examined for damage and frequency response shall be measured as specified in 4.7.2.2 and 4.7.3.2.

4.7.12 Switches (when applicable see 3.1) (see 3.15). The switch shall be subjected to 100,000 make and break cycles at a rate not to exceed 12 cycles per minute. Tests requiring repetitive operation of switches shall be made using a suitable device arranged to move the switch level into each "on" position and back to the original position to complete one cycle of operation, and thereby causing the switching mechanism to make-and-break (or break-and-make) all the circuits in which the switch is connected.

5. PACKAGING

5.1 Packaging. For acquisition purposes, the packaging requirements shall be as specified in the contract or order (see 6.2). When packaging of materiel is to be performed by DoD or in-house contractor personnel, these personnel need to contact the responsible packaging activity to ascertain packaging requirements. Packaging requirements are maintained by the Inventory Control Point's packaging activities within the Military Service or Defense Agency, or within the military service's system commands. Packaging data retrieval is available from the managing Military Department's or Defense Agency's automated packaging files, CD-ROM products, or by contacting the responsible packaging activity.

6. NOTES

(This section contains information of a general or explanatory nature which may be helpful, but is not mandatory.)

6.1 Intended use. Handsets covered in this specification are intended for use with wire and radio communications equipment in locations with extreme environmental conditions. The handset H-60( )/U is intended to be used as part of the intercom station AN/VIA-4, AN/MTC-3( ). The handset – H-156( )/U is intended to be used as part ot the AN/GRC-50A(V) 1 thru 5, AN/TRC-143. The handset –H-165( )/U is intended to be used as part of the C-1632/VIA-4 that is a component of the AN/VIA-4, AN/MTC-3( ).

6.2 Ordering data. The contract or purchase order should specify the following:

a. Title, number, and date of this specification.
b. Title, number, and date of the applicable specification sheet and the applicable type number (see 3.1).
c. Inspection of commercial packaging (see 4.6.2).
d. Packaging (see 5.1).

6.3 First article inspection. Information pertaining to first article inspection of components covered by this specification should be obtained from the procuring activity for the specific contracts involved (see 3.2 and 4.5).

6.4 Tin whisker growth (see 3.3.2). The use of alloys with tin content greater than 97 percent, by mass, may exhibit tin whisker growth problems after manufacture. Tin whiskers may occur anytime from a day to years after manufacture and can develop under typical operating conditions, on products that use such materials. Conformal coatings applied over top of a whisker-prone surface will not prevent the formation of tin whiskers. Alloys of 3 percent lead, by mass, have shown to inhibit the growth of tin whiskers. For additional information on this matter, refer to ASTM B545 (Standard Specification for Electrodeposited Coatings of Tin).

6.5 Environmentally preferable material. Environmentally preferable materials should be used to the maximum extent possible to meet the requirements of this specification. As of the dating of this

Downloaded from http://www.everyspec.com

document, the U.S. Environmental Protection Agency (EPA) is focusing efforts on reducing 31 priority chemicals. The list of chemicals and additional information is available on their website http://www.epa.gov/osw/hazard/wastemin/priority.htm. Included in the EPA list of 31 priority chemicals are cadmium, lead, and mercury. Use of these materials should be minimized or eliminated unless needed to meet the requirements specified herein (see 3.3).

6.6 Subject term (key word) listing.

Acoustical
Cord
Decibel
Frequency response
Handle
Magnetic receiver
Radio communications
Receiver
Sound pressure
Switches
Talk test
Transmitter

6.7 Changes from previous issue. The margins of this specification are marked with vertical lines to indicate where changes from the previous issue were made. This was done as a convenience only and the Government assumes no liability whatsoever for any inaccuracies in these notations. Bidders and contractors are cautioned to evaluate the requirements of this document based on the entire content irrespective of the marginal notations and relationship to the last previous issue.

CONCLUDING MATERIAL

Custodians.
Army - CR
Navy – EC
Air Force – 85
DLA - CC

Preparing activity:
DLA – CC

(Project 5965-2015-012)

Review activities:
Army - AR, MI, SM
Air Force - 99

NOTE: The activities listed above were interested in this document as of the date of this document. Since organizations and responsibilities can change, you should verify the currency of the information above using the ASSIST Online database at https://assist.dla.mil.