Downloaded from http://www.everyspec.com

MIL-D-98A
14 MAY 1962
SUPERSEDING
JAN-D-98
25 OCTOBER 1944

MILITARY SPECIFICATION

DIPHENYLAMINE, TECHNICAL

This specification has been approved by the Department of Defense and is mandatory for use by the Departments of the Army, the Navy, and the Air Force.

1. SCOPE

1.1 This specification covers one grade of diphenylamine for use in the manufacture of smokeless powder.

2. APPLICABLE DOCUMENTS

2.1 The following documents of the issue in effect on date of invitation for bids form a part of this specification to the extent specified herein.

SPECIFICATIONS

FEDERAL

PPP-D-705 — Drums, Metal, Shipping, Steel (over 12 and under 55 gallon).

PP-D-723 — Drums, Fiber.

MILITARY

JAN-P-112 — Packaging and Packing for Overseas Shipment - Drums, Plywood (for Drums Whose Weight of Contents Does Not Exceed 200 Pounds).

STANDARDS

MILITARY

MIL-STD-105 — Sampling Procedures and Tables for Inspection by Attributes

MIL-STD-109 — Inspection Terms and Definitions.

MIL-STD-129 — Marking for Shipment, and Storage.

PUBLICATIONS

ORDNANCE CORPS

ORD-M608-11 — Procedures and Tables for Continuous Sampling by Attributes.

(Copies of specifications, standards, drawings and publications required by suppliers in connection with specific procurement functions should be obtained from the procuring activity or as directed by the contracting officer).

2.2 **Other publications.** The following documents form a part of this specification to the extent specified herein. Unless otherwise

FSC 6810

Downloaded from http://www.everyspec.com

indicated, the issue in effect on date of invitation for bids shall apply.

UNIFORM CLASSIFICATION RULES

(Application for copies of these freight classification rules should be addressed to Uniform Classification Committee, 202 Union Station, Chicago 6, Illinois.)

AMERICAN TRUCKING ASSOCIATION, INC. PUBLICATION

Nation Motor Freight Classification Rules and Container Specifications

(Application for copies should be addressed to the American Trucking Association 1424 16th Street N. W., Washington, D. C.).

3. REQUIREMENTS

3.1 The properties of Diphenylamine shall be in accordance with Table I when determined as specified in the applicable paragraphs under 4.3.

TABLE I

Property	Percent maximum (max.)	Degree centigrade (C.)	Applicable paragraph
Setting Point	.....	51.7 to 53.0	4.3.1
Insoluble material (residue)	0.02	.....	4.3.2
Moisture	0.2	.....	4.3.3
Acidity (as hydrochloric acid)	0.005	.....	4.3.4
Alkalinity (as sodium hydroxide)	0.005	.....	4.3.4
Oxidizable material (as aniline)	0.1	.....	4.3.5

3.2 **Workmanship.** The standard of workmanship shall be such as to insure the production of material meeting the requirements of this specification. The diphenylamine shall be free of extraneous material, such as iron rust, wood particles, dirt, colored salts and other visible impurities. The color of diphenylamine shall be no darker than a light brown.

4. QUALITY ASSURANCE PROVISIONS

4.1 **General quality assurance provisions.** The supplier is responsible for the performance of all inspection requirements specified herein. Except as otherwise specified, the supplier may utilize his own or any other inspection facilities and services acceptable to the Government. Inspection records of the examinations and tests shall be kept complete and available to the Government as specified in the contract or order. The Government reserves the right to perform any of the inspections set forth in this specification where such inspections are deemed necessary to assure supplies and services conform to prescribed requirements. Reference shall be made to Standard MIL-STD-109 in order to define the terms used herein. Inspection shall be performed in accordance with this specification and other specifications referenced in any of the contractual documents.

4.1.1 *Contractor quality assurance system.* If the contractor desires to utilize a quality assurance system, which is at variance with the quality assurance provisions of 4.2 and 4.3 and other documents referenced herein, he shall submit a written description of the system to the contracting officer for approval prior to initiation of production. It shall include a description covering controls for lot formation and identification, inspections to be performed, inspection stations, sampling procedures, methods of inspection, (measuring and testing equipment), and provisions for control and disposition of non-conforming material. The written description will be considered acceptable when, as a minimum, it provides the quality assurance provisions required by the provisions of 4.2 and 4.3 and the other documents referenced herein. The contractor shall not be restricted to the inspection listed in this specification provided

Downloaded from http://www.everyspec.com

that an equivalent control is included in the approved quality assurance procedure. In cases of dispute as to whether certain procedures of the contractor's system provide equal assurance, the comparable procedure of this specification shall apply. The contractor shall notify the Government of, and obtain approval for, any changes to the written procedure that effects the degree of assurance required by this specification or other documents referenced herein.

4.1.2 *Submission of product.* At the time the completed lot of product is submitted to the Government for acceptance, the contractor shall supply the following information accompanied by a certificate which attests that the information provided is correct and applicable to the product submitted:

(a) A statement that the lot complies with all quality assurance provisions of the approved current written description of the system.

(b) Quantity of product inspected.

(c) Results obtained for all inspection performed.

(d) Specification number and date, together with an identification and date of changes.

(e) Certificates of analysis on all material procured directly by the contractor when such material is controlled by Government specifications referenced in any of the contractual documents.

(f) Quantity of product in the lot.

(g) Date submitted.

The certificate shall be signed by a responsible agent of the certifying organization. The initial certificate submitted shall be substantiated by evidence of the agent's authority to bind his principal. Substantiation of the agent's authority will not be required with subsequent certificates unless, during the course of the contract, this authority is vested in another agent of the certifying organization.

4.1.3 *Government verification.* Using the contractor's written quality assurance procedure (see 4.1.1), this detail specification, and other contractual documents as a guide, the Government inspector shall verify all quality assurance operations performed by the contractor. Verification shall be in accordance with a or b as applicable, the decision being the responsibility of the procuring activity. In either case, the inspector shall also ascertain, prior to acceptance, that all quality assurance provisions of other specifications referenced in any of the contractual documents have been complied with. Deviations from prescribed or agreed upon procedures discovered by the Government inspector shall be brought to the attention of the supplier. Disposition of the product and remedial action shall be as directed by the Government inspector and, depending on the nature of the deviation, may consist of lot rejection, screening, re-sampling, re-instruction of the supplier's employees, or other appropriate action:

(a) Verification at the point of manufacture shall be accomplished at unscheduled intervals in accordance with 4.1.3.1 and 4.1.3.2.

(b) Verification at the point of delivery shall be in accordance with 4.1.3.2.

4.1.3.1 *Surveillance.* Surveillance shall include, but is not limited to:

(a) Observation of procedures concerning lot formation and identification.

(b) Observation of sampling procedures and application of acceptance criteria.

(c) Determination that all required examinations and tests are performed in accordance with the prescribed procedures of this specifi-

Downloaded from http://www.everyspec.com

cation, or approved equivalents thereto.

(d) Review of procedures for control and disposition of non-conforming material.

4.1.3.2 *Product inspection.* Product inspection shall consist of Government inspection of product which has been previously inspected by the contractor and found to meet the quality assurance provisions of this specification. The inspection by the Government shall be performed in order to determine that the product is of the quality required by this specification and that the contractor's records are reliable.

4.2 Inspection provisions.

4.2.1 *Lot formation.* A lot shall consist of one or more batches of diphenylamine, produced by one manufacturer, in accordance with the same specification, or same specification revision, under one continuous set of operating conditions. Each batch shall consist of that quantity of diphenylamine that has been subjected to the same unit chemical or physical process intended to make the final product homogeneous.

4.2.2 *Examination.* Sampling plans and procedures for the following classification of defects shall be in accordance with Standard MIL-STD-105. Continuous sampling plans, in accordance with Handbook ORD-M603-11 may be used if approved by the procuring activity. Also, at the option of the procuring activity, AQL's and sampling plans may be applied to the individual characteristics listed using an AQL of 0.25 percent for each major defect and an AQL of 0.40 percent for each minor defect.

4.2.2.1 Drum, prior to filling (Polyethylene liner).

Categories	*Defects*	*Method of inspection*
Critical:	None defined	
Major:	AQL 0.25 percent	
101.	Liner cut, torn or punctured	Visual
Minor:	AQL 0.40 percent	
201.	Evidence of poor workmanship (see 3.2)	Visual

4.2.2.2 Drum, prior to filling (alternative method).

Categories	*Defects*	*Method of inspection*
Critical:	None defined	
Major:	AQL 0.25 percent	
101.	Laminations or coatings incomplete	Visual
Minor:	None defined	

4.2.2.3 Drum, prior to closing (Polyethylene liner).

Categories	*Defects*	*Method of inspection*
Critical:	None defined	
Major:	AQL 0.25 percent	
101.	Liner not completely sealed	Visual
Minor:	None defined	

4.2.2.4 Drum sealed (steel).

Categories	*Defects*	*Method of inspection*
Critical:	None defined	
Major:	AQL 0.25 percent	
101.	[illegible]	[illegible]
Minor:	AQL [illegible] percent	
201.	[illegible] unidentifiable	[illegible]

Downloaded from http://www.everyspec.com

4.2.2.5 Drum sealed (fiber).

Categories	Defects	Method of inspection
Critical:	None defined	
Major:	AQL 0.25 percent	
101.	Weight of contents	Scale
102.	Closure incomplete or damaged to the extent that contents sifts out	Visual
Minor:	AQL 0.40 percent	
201.	Marking misleading or unidentifiable	Visual

4.2.2.6 Drum sealed (plywood).

Categories	Defects	Method of inspection
Critical:	None defined	
Major:	AQL 0.25 percent	
101.	Weight of contents	Scale
102.	Strapping missing or broken	Visual
Minor:	AQL 0.40 percent	
201.	Markings misleading or unidentifiable	Visual

4.2.3 *Sampling*

4.2.3.1 *Packed by lot.* A random sample of 8 containers shall be selected from each lot. When lots comprise 8 containers or less, each container shall be selected.

4.2.3.1.1 *Preparation of composite sample (after packing).* A primary sample of approximately 2 ounces of diphenylamine shall be removed from each of the 8 containers in order to equal 16 ounces. If there are less than 8 containers, a primary sample in sufficient quantity to equal 16 ounces shall be removed from each container. The individual primary samples shall then be combined in order to form a homogeneous sample of 16 ounces. The determination shall be performed as specified in 4.3. If the composite sample fails to comply with any of the requirements specified the lot shall be rejected.

4.2.3.1.2 *Prior to packing.* Equal primary samples shall be taken from different places and depths so as to form a representative sample of the lot. The individual primary samples shall then be combined in order to form a homogeneous composite sample of 16 ounces. The determination shall be performed as specified in 4.3. If the composite sample fails to comply with any of the requirements specified, the lot shall be rejected.

4.3 **Test methods and procedures.** Test methods and procedures shall be performed as specified in paragraph 4.3.1 to 4.3.5.

4.3.1 *Determination of setting point.*

4.3.1.1 *Drying the sample.* Grind 80 to 100 grams (gm.) of the sample fine enough to pass through a United States (U. S.) Standard Number 12 (1680 micron) screen and dry for four hours at 40 degrees C., or melt the sample then add 20 gm. of anhydrous calcium chloride or sodium sulfate, and stir the mixture for 15 minutes at a temperature of 80 degrees C., allow the mineral salts to settle, and pour off the molten diphenylamine.

4.3.1.2 *Apparatus.* A solidification point apparatus shown in Figure 1 shall be used with a 76 millimeter partial immersion number 92C American Standard Testing and Material thermometer with a range of 40 to 70 degrees C.

4.3.1.3 *Procedure.* Transfer the dried sample to the inner test tube and melt it. Place the tube in the apparatus and adjust the

Downloaded from http://www.everyspec.com

thermometer so that the bulb is in the center of the diphenylamine. Stir the molten material vigorously by means of the hand stirrer and carefully note the point where the temperature begins to rise when solidification begins. Record the temperature every 15 seconds until the maximum reading is obtained. Record the maximum reading as the setting point of the diphenylamine.

4.3.2 *Insoluble material.* Dissolve 25 gm. of the sample 100 milliliters (ml.) of benzene (specific gravity of 0.878 at 20 degrees/20 degrees C.) or ethyl ether (specific gravity 0.717 to 0.723 at 20 degrees/20 degrees C.). Filter through a tared filtering crucible and ash thoroughly with the solvent. Dry the crucible for one hour at 100 degrees C., cool in a desiccator and weigh. Calculate the insoluble matter to percent of the weight of sample. The residue shall be checked visually (see 3.2).

4.3.3 *Moisture.* Dry 4 to 6 gm. of the powdered material in a weighing bottle about 4 centimeters diameter. Heat for 4 hours at 40 degrees C. uncorked, and calculate the loss in weight to percent of the sample taken and record as moisture.

4.3.4 *Acidity or Alkalinity.* Place 20 gm. of an as received sample in a 250 ml. Erlenmeyer flask and add 50 ml. of nearly boiling distilled water. Stopper immediately and shake vigorously for about ten minutes. Cool to 25 degrees C. and filter, retaining the diphenylamine in the flask. Repeat the extraction with 50 ml. of hot water exactly as above. To the combined filtrates add a few drops of phenolphthalein and titrate with 0.01 normal (N) alkali if it is acid, 0.01 N acid if alkaline. Make a blank titration on the water used and correct the titration for any acidity or alkalinity found. Calculate the acidity or alkalinity to hydrochloric acid or sodium hydroxide, respectively. Reserve this solution for the determination of aniline.

4.3.5 *Free aniline, aniline salts, and other oxidizable material.* Use the solution from the acid or alkali determination for determining aniline, aniline salts and other oxidizable material by the volumetric bromide - bromate method as follows. Measure accurately 25 ml. of 0.10N bromide - bromate solution with a pipette into a glass--stoppered Erlenmeyer flask containing the above filtrate and cool the contents to 15 degrees C. Add 5 ml. of concentrated hydrochloric acid and follow with the addition of 10 ml. of 10 percent potassium iodide solution after one minute. Titrate the contents with 0.10N sodium thiosulfate solution, using starch as indicator. Make blank determination on 25 ml. of 0.10N bromide-bromate solution exactly as above and calculate the aniline from the difference obtained by subtracting the number of ml. of thiosulfate solution used in titrating the sample from that used in titrating the blank. (A correction must be made for the amount of diphenylamine dissolved in 100 ml. of water at 25 degrees C. and also is shown in the formula as 0.33 ml. 0.1 normal sodium thiosulfate solution.)

Calculation:

$$\text{Percent aniline} = \frac{[(VN - vN) - 0.033]\ 1.551}{W}$$

where:

V = ml. sodium thiosulfate used in blank

v = ml. sodium thiosulfate used in titration.

N = Normality of sodium thiosulfate

W = Weight of sample

5. PREPARATION FOR DELIVERY

5.1 Packing

5.1.1 *Level A.* Unless otherwise specified in the contract or purchase order, Diphenylamine shall be packed in a fiber, plywood or metal drum in accordance with Specification PPP-D-723 (Type III, Grade A), JAN-P-112, and PPP-D-705 (Type VI, Full Removable Head Type), respectively. Fiber and plywood drums shall be furnished with a nominal 0.004 inch thick polyethylene liner

Downloaded from http://www.everyspec.com

properly heat sealed or otherwise closed to afford protection to the contents equivalent to that given by a heat sealed closure. (Alternatively, an equivalent degree of protection may be furnished by suitable laminations or coatings of the inner surface of the drum.) Closure of drums shall be in accordance with the applicable specification.

5.1.2 *Level C.* Diphenylamine shall be packed to afford protection against damage during direct shipment from the supply source to the first receiving activity for immediate use. Containers shall comply with Uniform Freight Classification Rules and Container Specifications for rail shipments or National Motor Freight Rules and Container Specifications for truck shipments, as applicable.

5.2 **Marking.** In addition to any special marking required by the contract or purchase order, containers shall be marked in accordance with Standard MIL-STD-129.

6. NOTES

6.1 **Ordering data.** Procurement documents should specify the following:

a. Title, number and date of this specification.

b. Level of packing (see 5.1).

6.2 **Intended use.** The intended use for the diphenylamine in this specification is as a stabilizer in the production of smokeless propellants.

Notice. When Government drawings, specifications, or other data are used for any purpose other than in connection with a definitely related Government procurement operation, the United States Government thereby incurs no responsibility nor any obligation whatsoever; and the fact that the Government may have formulated, furnished, or in any way supplied the said drawings, specifications, or other data is not to be regarded by implication or otherwise as in any manner licensing the holder or any other person or corporation, or conveying any rights or permission to manufacture, use, or sell any patented invention that may in any way be related thereto.

Custodian:

Army—Ordnance Corps

Navy—Bureau of Naval Weapons

Preparing activity:

Army—Ordnance Corps

Downloaded from http://www.everyspec.com

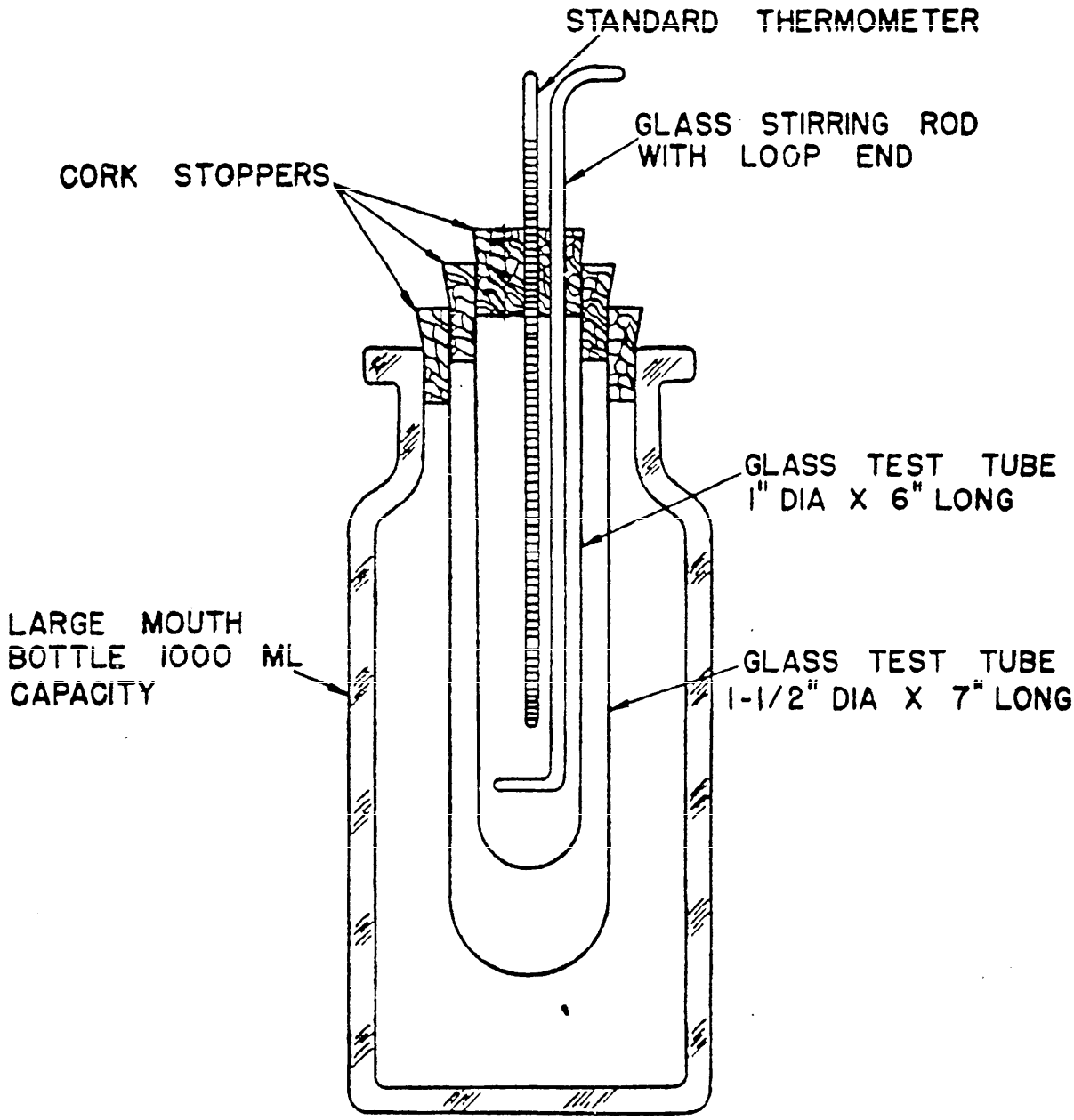

SOLIDIFICATION POINT APPARATUS

FIGURE 1.

Downloaded from http://www.everyspec.com

SPECIFICATION ANALYSIS SHEET

Form Approved
Budget Bureau No. 119-R004

INSTRUCTIONS

This sheet is to be filled out by personnel either Government or contractor, involved in the use of the specification in procurement of products for ultimate use by the Department of Defense. This sheet is provided for obtaining information on the use of this specification which will insure that suitable products can be procured with a minimum amount of delay and at the least cost. Comments and the return of this form will be appreciated. Fold on lines on reverse side, staple in corner, and send to preparing activity *(as indicated on reverse hereof)*.

SPECIFICATION

ORGANIZATION *(Of submitter)* | CITY AND STATE

CONTRACT NO. | QUANTITY OF ITEMS PROCURED | DOLLAR AMOUNT $

MATERIAL PROCURED UNDER A

☐ DIRECT GOVERNMENT CONTRACT ☐ SUBCONTRACT

1. HAS ANY PART OF THE SPECIFICATION CREATED PROBLEMS OR REQUIRED INTERPRETATION IN PROCUREMENT USE?

A. GIVE PARAGRAPH NUMBER AND WORDING.

B. RECOMMENDATIONS FOR CORRECTING THE DEFICIENCIES.

2. COMMENTS ON ANY SPECIFICATION REQUIREMENT CONSIDERED TOO RIGID

3. IS THE SPECIFICATION RESTRICTIVE?

☐ YES ☐ NO (IF "YES", IN WHAT WAY?)

4. REMARKS *(Attach any pertinent data which may be of use in improving this specification. If there are additional papers, attach to form and place both in an envelope addressed to preparing activity)*

SUBMITTED BY *(Printed or typed name and activity)* | DATE

DD FORM 1426

Downloaded from http://www.everyspec.com

FOLD

DEPARTMENT OF THE NAVY

POSTAGE AND FEES PAID
NAVY DEPARTMENT

OFFICIAL BUSINESS

COMMANDING OFFICER
U.S. ARMY MUNITIONS COMMAND
ATTN: SMUFA-5500
PHILA., PA. 19137

FOLD